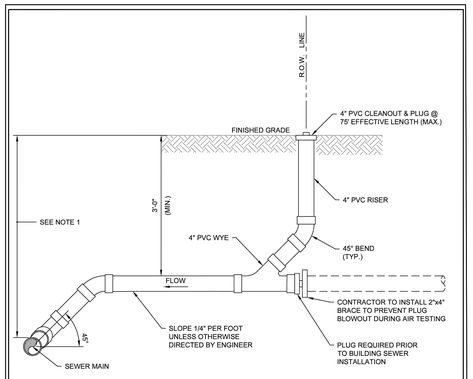

NOTES:

1. IF DEPTH OF COVER OVER EXISTING MAIN IS BETWEEN 10 FT AND 13 FT, CONSTRUCT DROP HOUSE CONNECTION PER DETAIL GSS-86. IF DEPTH OF COVER EXCEEDS 13 FT, CONSTRUCT DEEP HOUSE CONNECTION PER DETAIL GSS-41.
2. SANITARY LATERAL AND BUILDING SEWER PIPING MATERIALS SHALL CONFORM TO APPLICABLE PROJECT SPECIFICATIONS.
3. SANITARY LATERAL AND BUILDING SEWER INSTALLATION SHALL CONFORM TO THE REQUIREMENTS NOTED IN THE APPLICABLE PLUMBING CODE IN EFFECT.

AMERICAN WATER ENGINEERING, 1 WATER STREET, CAMDEN, NJ 08102 — AMERICAN WATER

AMERICAN WATER STANDARD
CIVIL
SANITARY SEWERAGE
SANITARY SEWER LATERAL CONNECTION

DATE: 01-MAY-2022	AMERICAN WATER ENGINEERING	SCALE: N.T.S.
STANDARD DETAILS	APPROVED	GSS-50

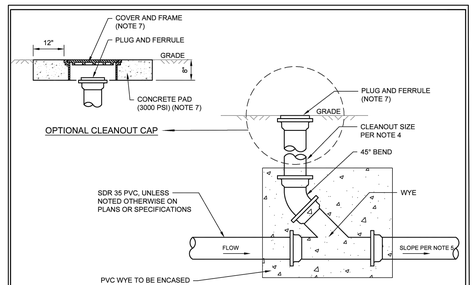

NOTES:

1. A CLEANOUT IS REQUIRED WITHIN 3 FT OF THE BUILDING FOUNDATION WALL.
2. CLEANOUTS IN HORIZONTAL DRAINAGE LINES SHALL BE SPACED AT INTERVALS NOT EXCEEDING THE FOLLOWING DISTANCES (DEVELOPED LENGTH):
   A. 4" PIPE OR LESS - 75 FEET
   B. 5" AND LARGER - 100 FEET
3. DEVELOPED LENGTH IS THE LENGTH OF A PIPE LINE MEASURED ALONG THE CENTERLINE OF THE PIPE AND FITTINGS. FOR A CLEANOUT SPACING, DEVELOPED LENGTH INCLUDES THE VERTICAL SEGMENT FROM THE GROUND SURFACE TO THE HORIZONTAL DRAIN PLUS THE LENGTH OF THE HORIZONTAL DRAIN FROM THE CLEANOUT TO THE ADJACENT DOWNSTREAM CLEANOUT OR SEWER MAIN.
4. SIZE OF CLEANOUT SHALL BE AS FOLLOWS:
   A. FOR BUILDING SEWERS 3" AND SMALLER, CLEANOUT SIZE TO MATCH BUILDING SEWER SIZE.
   B. FOR BUILDING SEWERS 4" THRU 6", CLEANOUT SIZE TO BE 4"
   C. FOR BUILDING SEWERS 8" AND 10", CLEANOUT SIZE TO BE 6"
5. BUILDING SEWERS SHALL BE INSTALLED IN UNIFORM ALIGNMENT AT THE FOLLOWING UNIFORM SLOPES:
   A. PIPE SIZES 2" OR LESS - 1/4" PER FT (2% SLOPE)
   B. PIPE SIZES 3" THRU 6", INCLUSIVELY - 1/8" PER FT (1% SLOPE)
   C. PIPE SIZES 8" AND LARGER - 1/16" PER FT (0.5% SLOPE)
6. PVC WYE TO BE ENCASED IN 3,000 PSI CONCRETE, UNLESS SPECIFIED OTHERWISE.
7. WHERE SPECIFIED ON DRAWINGS, PROVIDE OPTIONAL CLEANOUT CAP WITH CONCRETE HOUSEKEEPING PAD TO FACILITATE LOCATION OF CLEANOUTS. FRAMES SUBJECTED TO VEHICLE LOADING TO BE HEAVY DUTY. FRAMES IN SIDEWALK AREAS TO BE LIGHT DUTY. FRAMES TO BE SIZED TO ACCOMMODATE CLEANOUT SIZE REQUIRED. FRAME ID TO BE 8" MINIMUM.

AMERICAN WATER ENGINEERING, 1 WATER STREET, CAMDEN, NJ 08102 — AMERICAN WATER

AMERICAN WATER STANDARD
CIVIL
SANITARY SEWERAGE
SANITARY CLEANOUT - LAWN AREAS

DATE: 01-MAY-2022	AMERICAN WATER ENGINEERING	SCALE: N.T.S.
STANDARD DETAILS	APPROVED	GSS-39

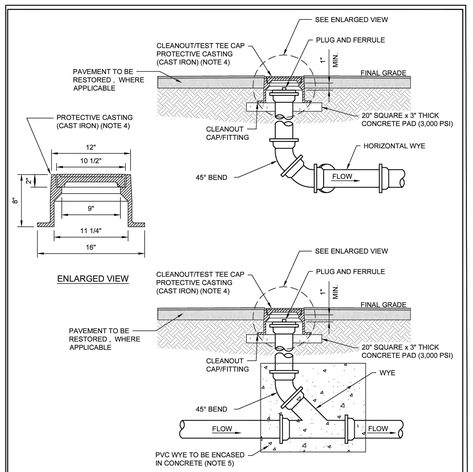

NOTES:

1. THIS CLEANOUT IS REQUIRED IN AREAS SUBJECT TO VEHICULAR WHEEL LOADING, AND IN SIDEWALK AREAS.
2. FOR CLEANOUT REQUIREMENTS, REFER TO DETAIL GSS-39 NOTES.
3. A STANDARD CLEANOUT SHALL BE INSTALLED WHEN THE DEVELOPED LENGTH OF DRAIN PIPE EXCEEDS 75 FEET AND/OR AT BENDS EXCEEDING 23-1/2°.
4. FRAMES SUBJECTED TO VEHICLE LOADING TO BE HEAVY DUTY. FRAMES IN SIDEWALK AREAS TO BE LIGHT DUTY. FRAMES TO BE SIZED TO ACCOMMODATE CLEANOUT SIZE REQUIRED. FRAME ID TO BE 8" MINIMUM.
5. PVC WYE TO BE ENCASED IN 3,000 PSI CONCRETE, UNLESS SPECIFIED OTHERWISE.

AMERICAN WATER ENGINEERING, 1 WATER STREET, CAMDEN, NJ 08102 — AMERICAN WATER

AMERICAN WATER STANDARD
CIVIL
SANITARY SEWERAGE
SANITARY CLEANOUT - VEHICULAR AREAS

DATE: 01-MAY-2022	AMERICAN WATER ENGINEERING	SCALE: N.T.S.
STANDARD DETAILS	APPROVED	GSS-40

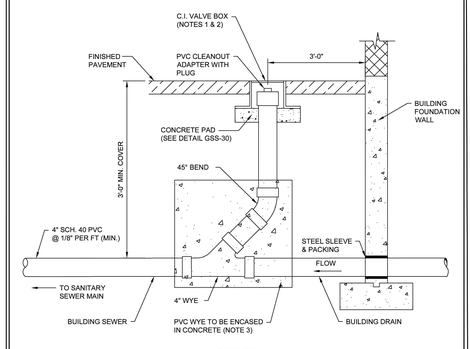

NOTES:

1. REFER TO GSS-30 FOR VALVE BOX REQUIREMENTS.
2. VALVE BOX COVER SHALL HAVE WORD "SEWER" CAST INTO THE LID.
3. PVC WYE TO BE ENCASED IN 3,000 PSI CONCRETE, UNLESS SPECIFIED OTHERWISE.

AMERICAN WATER ENGINEERING, 1 WATER STREET, CAMDEN, NJ 08102 — AMERICAN WATER

AMERICAN WATER STANDARD
CIVIL
SANITARY SEWERAGE
BUILDING SEWER CLEANOUT IN PAVEMENT

DATE: 01-MAY-2022	AMERICAN WATER ENGINEERING	SCALE: N.T.S.
STANDARD DETAILS	APPROVED	GSS-38

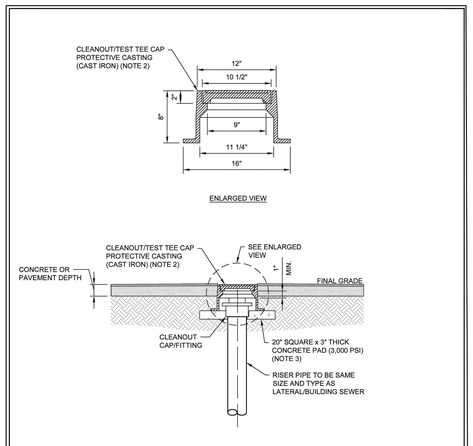

NOTES:

1. THIS DETAIL IS TO BE USED FOR CLEANOUTS SITUATED IN AREAS THAT WILL EXPOSED TO VEHICULAR TRAFFIC AND/OR SNOW BLOWING, AND IN SIDEWALK AREAS.
2. FRAMES SUBJECTED TO VEHICLE LOADING TO BE HEAVY DUTY. FRAMES IN SIDEWALK AREAS TO BE LIGHT DUTY.
3. PROVIDE 6" (MIN.) LAYER OF GRAVEL BEDDING IN LIEU OF CONCRETE PAD WHEN PROTECTIVE CASTING IS REQUIRED IN AREAS OTHER THAN THOSE IDENTIFIED IN NOTE 1.

AMERICAN WATER ENGINEERING, 1 WATER STREET, CAMDEN, NJ 08102 — AMERICAN WATER

AMERICAN WATER STANDARD
CIVIL
SANITARY SEWERAGE
CLEANOUT CAP PROTECTIVE CASTING

DATE: 01-MAY-2022	AMERICAN WATER ENGINEERING	SCALE: N.T.S.
STANDARD DETAILS	APPROVED	GSS-30

HERBERT, ROWLAND & GRUBIC, INC.
1275 GLENLIVET DRIVE
SUITE 145
ALLENTOWN, PA 18106
610.351.0311 | hrg-inc.com

PRELIMINARY / FINAL LAND DEVELOPMENT PLAN
FOR
EMERGENCY SERVICES FACILITY
EXETER TOWNSHIP
4975 DEMOSS ROAD
READING, PA 19606
EXETER TOWNSHIP, BERKS COUNTY, PENNSYLVANIA

PROFESSIONAL SEAL:

HRG PROJECT NUMBER:	R006367.0427
PLAN DATE:	2026.02.18
DRAWING SCALE:	AS SHOWN
PROJ. MANAGER:	DENNIS REICHEL

REVISIONS

NO.	DATE	DESCRIPTION
1	2026.03.18	REV AS PER 3/16/26 PLANNING COMMISSION COMMENTS
2	2026.06.15	50% CONSTRUCTION PLAN
3	2026.08.21	90% CONSTRUCTION PLAN
4	2026.10.01	BID SET
5		
6		
7		
8		
9		

SHEET TITLE:
SITE DETAILS

SHEET: **DT-06** 20

MW STUDIOS
ARCHITECTURE + MASTER PLANNING
8098 SANDPIPER CIR, SUITE
NOTTINGHAM, MD 21236
☎ 410-344-1460
✉ INFO@MWSARCH.COM
WWW.MWSARCH.COM

CONSULTANT:

HERBERT, ROWLAND & GRUBIC, INC.
1275 GLENLIVET DRIVE
SUITE 145
ALLENTOWN, PA 18106
610.351.0311 | hrg-inc.com

SEAL:

COMMONWEALTH OF PENNSYLVANIA — REGISTERED PROFESSIONAL — DENNIS J REICHEL — ENGINEER NO. PE070767 — 10/01/2026

EXETER TOWNSHIP
EMERGENCY SERVICES FACILITY
70 GIBRALTAR ROAD
READING, PA 19606

PROJECT NUMBER:
25-049

SUBMISSION:
BID SET

ORIGINAL ISSUE DATE:
10/01/2026

SHEET REVISION SCHEDULE:
No. DATE

REFERENCE PLAN

SHEET NUMBER:

C20

ALL DRAWINGS ARE PROTECTED BY FEDERAL COPYRIGHT BY MANNS WOODWARD STUDIOS, INC. AND CAN NOT BE REPRODUCED OR MODIFIED IN ANY MANNER WITHOUT WRITTEN PERMISSION. DOCUMENTS MAY NOT BE USED IN PART OR WHOLE TO DEVELOP THE DESIGN OF ANOTHER BUILDING WITHOUT EXPRESS WRITTEN PERMISSION BY MANNS WOODWARD STUDIOS.

4-INCH TO 10-INCH METER VAULT SPECIFICATIONS

PENNSYLVANIA AMERICAN WATER

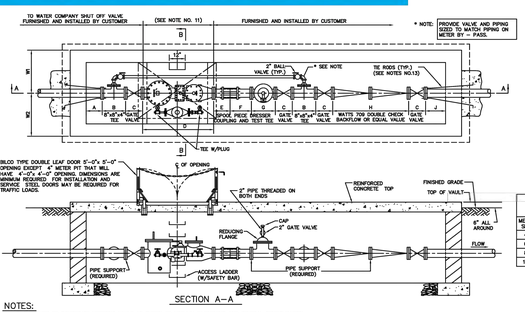

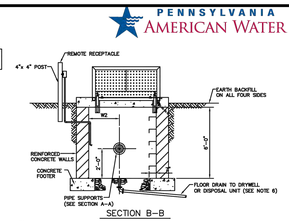

LAYING LENGTHS												
METER SIZE	W1	W2	A	B	C	D	E	F	G	H	J	TOTAL
4"	30"	24"	12"	13"	9"	23"	6"	SEE NOTE 10	13"	37 1/8"	18"	16'–0"
6"	36"	30"	12"	16"	10 1/2"	43"	9"	SEE NOTE 10	16"	44 1/2"	18"	19'–6"
8"	36"	30"	12"	16"	11 1/2"	53"	13"	SEE NOTE 10	16"	50 3/4"	18"	22'–6"
10"	36"	30"	12"	22"	13 1/2"	68"	15"	SEE NOTE 10	22"	66 5/8"	18"	27'–0"

NOTES:

1. CUSTOMER TO CONSTRUCT METERING VAULT AS SHOWN TO MINIMUM DIMENSIONS AND GENERAL CONFIGURATION.
2. PIPE SUPPORTS, TIE RODS, ANCHORS AND THRUST BRACING AT FITTINGS AND VALVES SHALL BE PROVIDED SUFFICIENT, TO ALLOW PIPING TO STAND WITH REMOVAL OF METERS, FRICTION CLAMPS ARE NOT PERMITTED FOR RESTRAINT OF PIPING SYSTEMS.
3. THE CONNECTION TO THE EXISTING WATER MAIN AND VALVE WILL BE INSTALLED BY PENNSYLVANIA AMERICAN WATER COMPANY.
4. DOUBLE CHECK BACKFLOW PREVENTION DEVICE IS REQUIRED AS SHOWN AND/OR BACKFLOW PREVENTION DEVICE OF REDUCED PRESSURE, PRINCIPAL DESIGN MAY BE REQUIRED. THIS TYPE OF DEVICE IS TO BE INSTALLED ON THE SERVICE LINE, INSIDE AND AT THE POINT WHERE IT ENTERS THE BUILDING. (TYPE AND MANUFACTURES OF BACKFLOW DEVICE MAY AFFECT DIMENSIONS.)
5. 2" VALVES AND UNDER ARE I.P.S. 4" VALVES AND OVER ARE FLANGED – 125 P.S.I. CLASS FLANGE W/125 P.S.I. DRILLING.
6. IT WILL BE NECESSARY FOR THE CUSTOMER TO INSTALL PROPER DRAINAGE OR OTHER MECHANICAL MEANS TO KEEP VAULT DEWATERED.
7. WATER SERVICE WILL NOT BE PROVIDED UNTIL VAULT IS COMPLETED AS DETAILED. WATER COMPANY TO REVIEW FINAL DESIGN OF VAULT BY CUSTOMER FOR DIMENSIONS AND OVERALL CONFIGURATION.
8. GATE VALVES AND PIPING MUST BE SAME SIZE AS METER.
9. ALL VALVES AND BACKFLOW PREVENTORS TO BE MAINTAINED BY CUSTOMER.
10. BILCO TYPE DOOR BY BE ENTERED OVER METER ASSEMBLY AND ACCESS LADDER
11. METER ASSEMBLY WILL NOT BE INSTALLED UNTIL ALL PIPING IS COMPLETED IN THE VAULT. A FILLER PIECE SHOULD BE INSTALLED TO ASSURE PROPER ALIGNMENT OF FLANGES. METER ASSEMBLY FURNISHED AND INSTALLED BY PENNSYLVANIA – AMERICAN WATER COMPANY.
12. MUST BE SUFFICIENT TO CLEAR BREAK IN PIPING W/DRESSER COUPLING RING.
13. TIE RODS TO BE EMBEDDED IN CONCRETE OR BOLTED TO STEEL ON PLATES ON EXTERIOR WALLS. WATER COMPANY TO INSPECT BEFORE BACKFILLING.

NOTE:
a. VAULT DESIGN TO BE BY REGISTERED PROFESSIONAL ENGINEER; IF TRAFFIC LOADS ARE EXPECTED, DESIGN FOR AASHO H20 LOADING. DESIGN MUST PROVIDE FOR ALL EXPECTED FIELD CONDITIONS, INCLUDING SAFE WORKING ENVIRONMENT FOR WATER COMPANY PERSONNEL.
b. PA. AMERICAN WATER CO. MAY REQUIRE IN THE VAULT TELEPHONE AND/OR POWER (120 VAC, 15 AMP) FOR "AMR" INSTALLATION OR SUMP PUMP FOR DRAINAGE.
c. IF PIT IS PROVIDED WITH ELECTRICAL SUPPLY PLEASE SUPPLY OUTSIDE DISCONNECT AND PROVISIONS FOR SUMP PUMP (FUTURE).
d. PRE–CAST VAULTS ARE AVAILABLE AND CUSTOMERS SHOULD VERIFY DESIGN BY THEIR ENGINEER.
e. VAULT AND METER INSTALLATION IS PA. AMERICAN WATER CO. STANDARD FOR OPTIMUM PERFORMANCE AND DESIGN FOR INSTALLATION AND SEANDING ALTERNATE DESIGNS MAY BE REQUIRED, PLEASE CONTACT PA. AMERICAN WATER CO. PERSONAL FOR REVIEW AND APPROVAL.

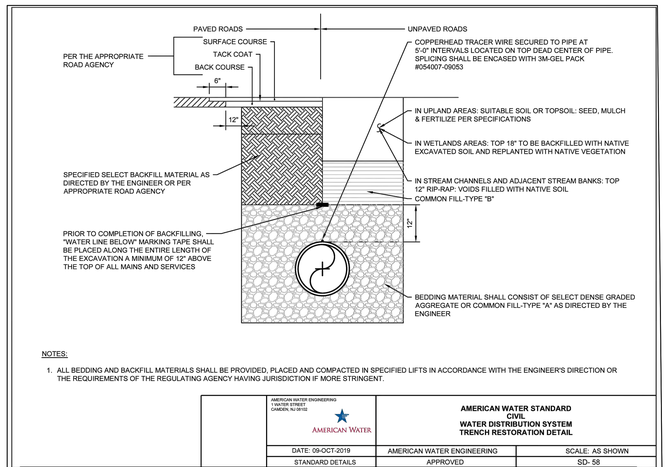

NOTES:

1. ALL BEDDING AND BACKFILL MATERIALS SHALL BE PROVIDED, PLACED AND COMPACTED IN SPECIFIED LIFTS IN ACCORDANCE WITH THE ENGINEER'S DIRECTION OR THE REQUIREMENTS OF THE REGULATING AGENCY HAVING JURISDICTION IF MORE STRINGENT.

AMERICAN WATER ENGINEERING 1 WATER STREET CAMDEN, NJ 08102	AMERICAN WATER STANDARD CIVIL WATER DISTRIBUTION SYSTEM TRENCH RESTORATION DETAIL	
DATE: 09-OCT-2019	AMERICAN WATER ENGINEERING	SCALE: AS SHOWN
STANDARD DETAILS	APPROVED	SD- 58

NOTES:

1. COVER OVER TOP OF PIPE SHALL BE BELOW FROST LINE OR 30" MINIMUM, 72" MAXIMUM ACCORDING TO REGULATORY REQUIREMENTS. IF GRADING PLANS RECEIVED BY THE ENGINEER/OWNER WITH THE REQUEST FOR WATER MAIN LAYOUT, INDICATE ADJUSTMENTS TO EXISTING GRADE. THEN PIPE SHALL BE INSTALLED TO MEET MINIMUM AND MAXIMUM COVER FROM PROPOSED GRADES SHOWN ON SAID PLANS.
2. THRUST BLOCKS SHALL BE BUILT AGAINST UNDISTURBED SOIL WITH ADEQUATE BACKING TO PREVENT MOVEMENT OF FITTING. WHERE IT IS NOT POSSIBLE, THE FILL BETWEEN THE BEARING SURFACE AND UNDISTURBED SOIL MUST BE COMPACTED TO AT LEAST 90% STANDARD PROCTOR DENSITY.E
3. NO THRUST BLOCKS TO BE PLACED IN SEWER LATERAL DITCHES.
4. THRUST BLOCKING MUST FIT IN EASEMENT, IN SOME CASES ADDITIONAL RESTRAINT MAY BE REQUIRED.
5. BASED ON 200 PSI (150 PSI STATIC PRESSURE PLUS 50 PSI WATER HAMMER) AND 2000 PSF SOIL BEARING. CONSULT ENGINEER FOR ADJUSTMENTS.
6. POLYETHYLENE ENCASEMENT ON ALL D.I. PIPE AND FITTINGS.
7. PIPE JOINTS AND BOLTS MUST BE ACCESSIBLE.
8. ALLOW SUFFICIENT CLEARANCE BETWEEN CONCRETE AND BOLTS FOR FUTURE MAINTENANCE.
9. ALL ANCHOR BOLTS SHALL BE COR-BLUE, MINIMUM 1/2" DIAMETER. COAT EXPOSED ROD WITH ASPHALT CEMENT AFTER CONCRETE HAS SET.
10. ALL M.J. AND FLG. FITTINGS TO RECEIVE THRUST BLOCKS SHALL HAVE THE FASTENER AREAS FELT WRAPPED AND TAPED PRIOR TO THE CONCRETE POUR TO ALLOW FUTURE ACCESS TO THE FASTENERS AT THE JOINTS.
11. THRUST BLOCKING DETAILS ARE SHOWN HERE FOR TYPICAL INSTALLATIONS. IN SOME CASES, ADDITIONAL RESTRAINT MAY BE REQUIRED.
12. PORTLAND CEMENT CONCRETE USED FOR THRUST BLOCKS SHALL BE MIN 3000 PSI CONCRETE.
13. FOR UNSTABLE SOIL CONDITIONS, CHECK WITH ENGINEER FOR THRUST BLOCK DIMENSIONS.
14. FOR MAIN SIZES GREATER THAN 36", SEE ENGINEER FOR THRUST BLOCK DIMENSIONS.

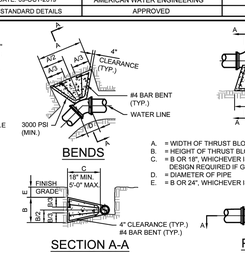

REQUIRED BEARING AREA ON UNDISTURBED SOIL AND TYPICAL THRUST BLOCK DIMENSIONS

NOMINAL PIPE SIZE	90 DEGREE BEND			45 DEGREE BEND			22.5 DEGREE BEND			11.25 DEGREE BEND			TEE/PLUGS		
	AREA (sq ft)	WIDTH (W) (in)	HEIGHT (H) (in)	AREA (sq ft)	WIDTH (B) (in)	HEIGHT (H) (in)	AREA (sq ft)	WIDTH (B) (in)	HEIGHT (H) (in)	AREA (sq ft)	WIDTH (B) (in)	HEIGHT (H) (in)	AREA (sq ft)	WIDTH (B) (in)	HEIGHT (H) (in)
4	2.0	18	17	1.0	14	12	0.5	12	6	0.3	12	4	1.0	14	12
6	4.5	30	22	2.3	18	18	1.1	18	9	0.6	18	6	2.3	18	18
8	8.0	42	27	4.0	24	24	2.0	24	12	1.0	24	8	4.0	24	24
10	12.5	54	33	6.3	30	30	3.1	30	15	1.6	30	10	6.3	30	30
12	18.0	66	39	9.0	36	36	4.5	36	18	2.3	36	12	9.0	36	36
14	24.5	78	45	12.3	42	42	6.1	42	21	3.1	42	14	12.3	42	42
16	32.0	90	51	16.0	48	48	8.0	48	24	4.0	48	16	16.0	48	48
18	40.5	102	57	20.3	54	54	10.1	54	27	5.1	54	18	20.3	54	54
20	50.0	114	63	25.0	60	60	12.5	60	30	6.3	60	20	25.0	60	60
24	72.0	138	75	36.0	72	72	18.0	72	36	9.0	72	24	36.0	72	72
30	112.5	174	93	56.3	90	90	28.1	90	45	14.1	90	30	56.3	90	90
36	162.0	210	111	81.0	108	108	40.5	108	54	20.3	108	36	81.0	108	108

NOTES:
1. AREA IN SQUARE FEET, WIDTH (W) AND HEIGHT (B) IN INCHES
2. BASED ON ALLOWABLE SOIL BEARING CAPACITY OF 2000 LB/SQUARE FOOT AND MINIMUM BEARING CAPACITY OF 2000 LB/SQUARE FOOT
3. FOR HIGH WATER PRESSURES, OR LOWER BEARING FACTORS, CONSULT ENGINEER FOR ADJUSTMENT
4. TABLE INCLUDES SAFETY FACTOR = 1.5
5. ADDITIONAL SAFETY FACTOR AND/OR BEAM VS AREA MAY BE REQUIRED AS DIRECTED BY THE ENGINEER

AMERICAN WATER ENGINEERING 1 WATER STREET CAMDEN, NJ 08102	AMERICAN WATER STANDARD CIVIL WATER DISTRIBUTION SYSTEM THRUST BLOCK DETAIL	
DATE: 09-OCT-2019	AMERICAN WATER ENGINEERING	SCALE: AS SHOWN
STANDARD DETAILS	APPROVED	SD- 6

SUBDIVISION AND LAND DEVELOPMENT

330 Attachment 7

Township of Exeter

Appendix V

Specifications & Dimensions for HIHS™ Integral Hydrant Storz™

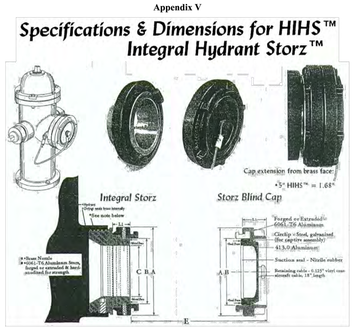

Nominal Dimensions (in inches)					
Hydrant Storz	A	B	C	E	L1
5" Storz	7.71	5.84	4.54	1.68	1.19

•Hydrant connection: Brass
•Main Legs & Ranger Aluminum
•Finish: Hardcoat anodized to MIL-A-46225E Type 3, dark gray
•Main sealing face: Brass

Nominal Dimensions (in inches)			
Storz Cap	A	B	L1
5" Storz	7.71	5.84	1.63

•Short Legs & Ranger Aluminum
•Finish: Hardcoat anodized to MIL-A-46225E Type 3, dark gray
•Requirements: Torque to install or remove to be a minimum of 35 ft.-lb., maximum of 50 ft.-lb.

*Connection methods of the brass nozzle on current hydrant models vary. A thread type (as shown above) or a lug type are used. No two hydrant manufacturers use identical connection methods. Harrington offers HIHS™ for all current hydrants.



NOTES:

1. CONTRACTOR TO SUBMIT RESTRAINED DESIGN.
2. PAINT HYDRANT TO BURY LINE (CAN BE DONE PRIOR TO INSTALLATION).
3. APPLY TOUCH UP PAINT AS REQUIRED AFTER INSTALLATION.
4. ALL HYDRANTS SHALL STAND PLUMB AND SHALL HAVE THE PUMPER NOZZLE FACING THE CURB.
5. PORTLAND CEMENT CONCRETE USED FOR THE THRUST BLOCKS SHALL BE MIN. 3000 PSI CONCRETE.

THE THREADS SHALL BE READING STANDARD THREADS. ALL 2½" OUTLETS SHALL BE 2.50 BY 6 (SIX THREADS PER INCH) MALE. THE 4 ½ INCH OUTLET OR "STREAMER" SHALL BE EQUIPPED WITH A 5" STORZ CONNECTION WITH CAP. THE OPERATING LUG NUT DESIGN SHALL BE A 1" SQUARE AND ALL "CAP" COVERS SHALL BE 1" SQUARE LUG NUT WITH THE EXCEPTION OF THE STORZ CONNECTOR. (SEE APPENDIXES V AND V–A).

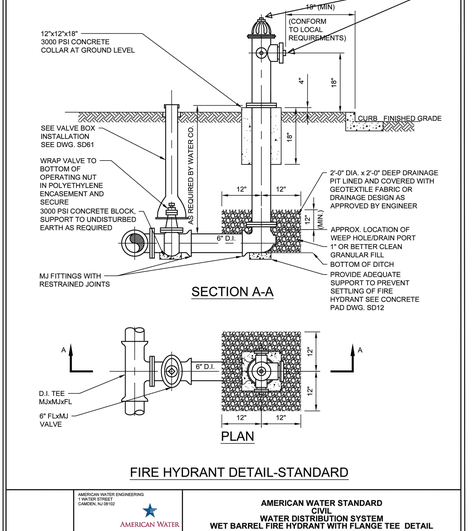

FIRE HYDRANT DETAIL-STANDARD

AMERICAN WATER ENGINEERING 1 WATER STREET CAMDEN, NJ 08102	AMERICAN WATER STANDARD CIVIL WATER DISTRIBUTION SYSTEM WET BARREL FIRE HYDRANT WITH FLANGE TEE DETAIL	
DATE: 09-OCT-2019	AMERICAN WATER ENGINEERING	SCALE: AS SHOWN
STANDARD DETAILS	APPROVED	SD- 31

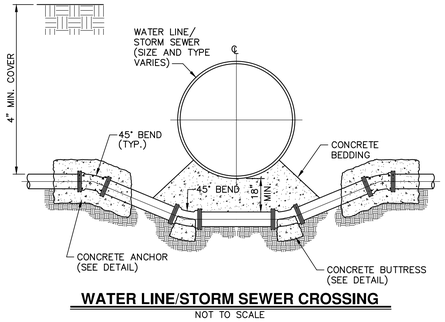

WATER LINE/STORM SEWER CROSSING

NOT TO SCALE

MAXIMUM JOINT DEFLECTION

MAXIMUM JOINT DEFLECTION DUCTILE IRON PUSH ON PIPE						
NOMINAL PIPE SIZE	DEFLECTION ANGLE	MAX OFFSET -S		APPROX RADIUS OF CURVE - R PRODUCED BY SUCCESSION OF JOINTS		CURRENT AW DEFLECTION ANGLE
INCHES	DEGREES	INCHES		INCHES		DEGREES
		L/4.18 FT	L/4.20 FT	L/4.18 FT	L/4.20 FT	
3	4	15	17	256	285	
4	4	15	17	256	285	
6	4	15	17	256	285	4
8	4	15	17	256	285	4
10	4	15	17	256	285	
12	4	15	17	256	285	4
14	4	9	10	256	285	
16	2.5	9	10	429	476	2.5
18	2.5	9	10	429	476	
20	2.5	9	10	429	476	2
24	2.5	9	10	429	476	1.5

MAXIMUM JOINT DEFLECTION DUCTILE IRON MJ PIPE						
NOMINAL PIPE SIZE	DEFLECTION ANGLE	MAX OFFSET -S		APPROX RADIUS OF CURVE - R PRODUCED BY SUCCESSION OF JOINTS		CURRENT AW DEFLECTION ANGLE
INCHES	DEGREES	INCHES		INCHES		DEGREES
		L/18 FT	L/20 FT	L/18 FT	L/20 FT	Table deleted
3	6.5	28	28	158	176	
4	6.5	25	28	158	176	
6	5.5	22	24	182	202	
8	4	16	18	256	285	
10	4	16	18	256	285	
12	4	16	18	256	285	
14	3	11	12	367	408	
16	3	11	12	367	408	
18	2.5	11	10	429	476	
20	2.5	9	10	429	476	
24	1.5	9	8	644	715	

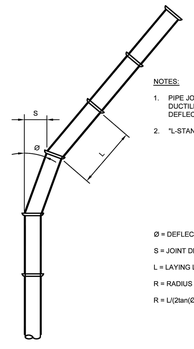

NOTES:

1. PIPE JOINT DEFLECTION ALLOWED ON DUCTILE IRON PIPE ONLY. PIPE JOINT DEFLECTION NOT ALLOWED ON PVC PIPE.
2. *L-STANDARD LENGTH OF PIPE SECTION.

Ø = DEFLECTION ANGLE

S = JOINT DEFLECTION OFFSET

L = LAYING LENGTH

R = RADIUS OF CURVE

R = L/(2tan(Ø/2))

AMERICAN WATER ENGINEERING 1 WATER STREET CAMDEN, NJ 08102	AMERICAN WATER STANDARD CIVIL WATER DISTRIBUTION SYSTEM PIPE CURVE GEOMETRY DETAIL	
DATE: 09-OCT-2019	AMERICAN WATER ENGINEERING	SCALE: AS SHOWN
STANDARD DETAILS	APPROVED	SD- 32

ALL DRAWINGS ARE PROTECTED BY FEDERAL COPYRIGHT BY MANNS WOODWARD STUDIOS, INC. AND CAN NOT BE REPRODUCED OR MODIFIED IN ANY MANNER WITHOUT WRITTEN PERMISSION. DOCUMENTS MAY NOT BE USED IN PART OR WHOLE TO DEVELOP THE DESIGN OF ANOTHER BUILDING WITHOUT EXPRESS WRITTEN PERMISSION BY MANNS WOODWARD STUDIOS.

HERBERT, ROWLAND & GRUBIC, INC.
1275 GLENLIVET DRIVE
SUITE 145
ALLENTOWN, PA 18106
610.351.0311 | hrg-inc.com

PRELIMINARY / FINAL LAND DEVELOPMENT PLAN
FOR
EMERGENCY SERVICES FACILITY
EXETER TOWNSHIP
4975 DEMOSS ROAD
READING, PA 19606
EXETER TOWNSHIP, BERKS COUNTY, PENNSYLVANIA

REVISIONS		
NO.	DATE	DESCRIPTION
1	2026.01.18	REV AS PER 3/16/26 PLANNING COMMISSION COMMENTS
2	2026.06.15	50% CONSTRUCTION PLAN
3	2026.08.21	90% CONSTRUCTION PLAN
4	2026.10.01	BID SET
5		
6		
7		
8		
9		

PROFESSIONAL SEAL:

COMMONWEALTH OF PENNSYLVANIA — REGISTERED PROFESSIONAL — DENNIS J REICHEL — ENGINEER NO. PE070767 — 10/01/2026

HRG PROJECT NUMBER: R006367.0427
PLAN DATE: 2026.02.18
DRAWING SCALE: AS SHOWN
PROJ. MANAGER: DENNIS REICHEL

SHEET TITLE:
SITE DETAILS

SHEET: **DT-07** 21

MN STUDIOS
ARCHITECTURE + MASTER PLANNING
8098 SANDPIPER CIR, SUITE
NOTTINGHAM, MD 21236
410–344–1460
INFO@MWSARCH.COM
WWW.MWSARCH.COM

CONSULTANT:

HERBERT, ROWLAND & GRUBIC, INC.
1275 GLENLIVET DRIVE
SUITE 145
ALLENTOWN, PA 18106
610.351.0311 | hrg-inc.com

SEAL:

COMMONWEALTH OF PENNSYLVANIA — REGISTERED PROFESSIONAL — DENNIS J REICHEL — ENGINEER NO. PE070767 — 10/01/2026

EXETER TOWNSHIP
EMERGENCY SERVICES FACILITY
70 GIBRALTAR ROAD
READING, PA 19606

PROJECT NUMBER:
25–049

SUBMISSION:
BID SET

ORIGINAL ISSUE DATE:
10/01/2026

SHEET REVISION SCHEDULE:
No. DATE

REFERENCE PLAN

SHEET NUMBER:

C21

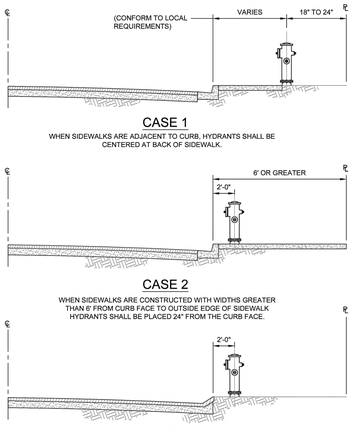

NOTES:

1. REQUIREMENT OF LOCAL AUTHORITY HAVING JURISDICTION SHALL PREVAIL. IN THEIR ABSENCE, THE INSTALLATIONS SHOWN MAY BE USED.
2. EXACT HYDRANT LOCATION TO BE FIELD DETERMINED BY LOCAL AUTHORITY HAVING JURISDICTION.

AMERICAN WATER ENGINEERING, 1 WATER STREET, CAMDEN, NJ 08102

AMERICAN WATER STANDARD
CIVIL
WATER DISTRIBUTION SYSTEM
FIRE HYDRANT LOCATION DETAIL

DATE: 09-OCT-2019	AMERICAN WATER ENGINEERING	SCALE: AS SHOWN
STANDARD DETAILS	APPROVED	SD- 36

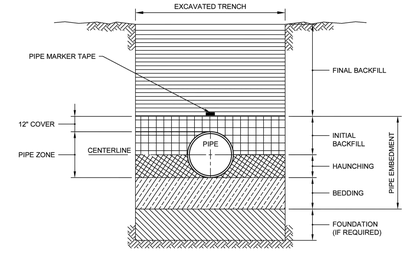

TRENCH TERMINOLOGY:

FOUNDATION: A FOUNDATION IS NECESSARY ONLY WHEN NATIVE SOILS ARE UNSTABLE. FOR SUCH CONDITIONS, THE TRENCH IS OVER-EXCAVATED AND A LAYER OF SUPPORTIVE MATERIAL IS PLACED AND COMPACTED TO PROVIDE A FIRM FOUNDATION FOR THE SUBSEQUENT PIPE EMBEDMENT MATERIALS.

EMBEDMENT: THIS ZONE IS THE MOST IMPORTANT IN TERMS OF PIPE PERFORMANCE. IT IS DIVIDED INTO THE FOLLOWING SUB ZONES:

- BEDDING: TYPICALLY SIX INCHES OF SUPPORTIVE, COMPACTED MATERIAL. THIS ZONE PROVIDES EVEN SUPPORT FOR THE PIPE AND BRINGS IT TO GRADE.
- HAUNCHING: EXTENDS FROM THE BOTTOM OF THE PIPE TO THE CENTERLINE OF THE PIPE. IT PROVIDES THE MOST RESISTANCE TO PIPE DEFLECTION. SPECIFYING PROPER MATERIALS AND COMPACTION ARE MOST IMPORTANT FOR THIS ZONE.
- INITIAL BACKFILL: EXTENDS FROM THE SPRINGLINE TO A POINT ABOVE THE TOP OF THE PIPE. THIS ZONE PROVIDES SOME PIPE SUPPORT AND HELPS TO PREVENT DAMAGE TO THE PIPE DURING PLACEMENT OF THE FINAL BACKFILL. THE COVER EXTENDS FROM THE TOP OF THE PIPE TO THE TOP OF THE INITIAL BACKFILL. THE DEPTH OF COVER SHOULD BE AS MUCH AS NECESSARY TO PROTECT THE PIPE DURING PLACEMENT OF THE FINAL BACKFILL. TWELVE INCHES IS A COMMON DEPTH OF COVER.

FINAL BACKFILL: THIS ZONE EXTENDS FROM THE TOP OF THE INITIAL BACKFILL TO THE TOP OF THE TRENCH. THIS ZONE HAS LITTLE INFLUENCE ON PIPE PERFORMANCE, BUT CAN BE IMPORTANT TO THE INTEGRITY OF ROADS AND STRUCTURES.

AMERICAN WATER ENGINEERING, 1 WATER STREET, CAMDEN, NJ 08102

AMERICAN WATER STANDARD
CIVIL
WATER DISTRIBUTION SYSTEM
PIPE TRENCH TERMINOLOGY DETAIL

DATE: 09-OCT-2019	AMERICAN WATER ENGINEERING	SCALE: AS SHOWN
STANDARD DETAILS	APPROVED	SD- 53

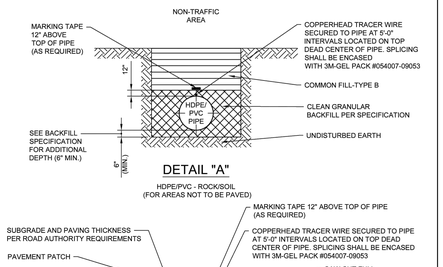

DETAIL "A"

HDPE/PVC - ROCK/SOIL
(FOR AREAS NOT TO BE PAVED)

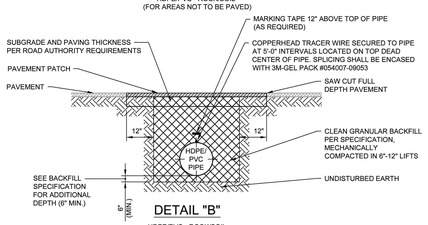

DETAIL "B"

HDPE/PVC - ROCK/SOIL
(FOR PAVED AREAS OR AREAS TO BE PAVED OR WITHIN 18" OF PAVING)

NOTES:

1. CAUTION MUST BE EXERCISED TO ENSURE PROPER PLACEMENT OF EMBEDMENT MATERIAL UNDER THE HAUNCHES OF THE PIPE.
2. CAUTION MUST BE EXERCISED TO PREVENT UNNECESSARY SCRATCHING AND CUTTING OF PLASTIC PIPE DURING BACKFILL.
3. COMMON FILL TYPE "A" MAY BE PERMITTED FOR HAUNCHING AND INITIAL COVER FOR HDPE PIPE. SEE SPECIFICATION 312333. IN ALL CASES 3/4" CLEAN GRANULAR FILL IS REQUIRED AS BEDDING MATERIAL.
4. SEE SPECIFICATION SECTION 312333 FOR DESCRIPTION OF BACKFILL AND BEDDING MATERIAL.

AMERICAN WATER ENGINEERING, 1 WATER STREET, CAMDEN, NJ 08102

AMERICAN WATER STANDARD
CIVIL
WATER DISTRIBUTION SYSTEM
TRENCH - HDPE & PVC PIPE IN ROCK/SOIL DETAIL

DATE: 09-OCT-2019	AMERICAN WATER ENGINEERING	SCALE: AS SHOWN
STANDARD DETAILS	APPROVED	SD- 54

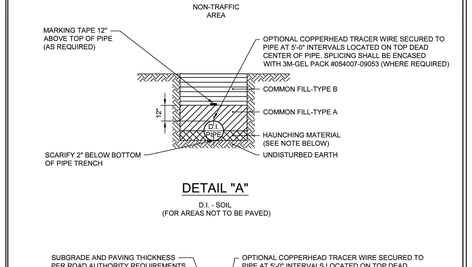

DETAIL "A"

D.I. - SOIL
(FOR AREAS NOT TO BE PAVED)

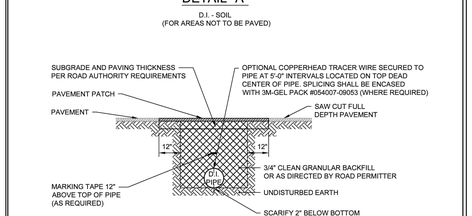

DETAIL "B"

D.I. - SOIL
(FOR PAVED AREAS OR AREAS TO BE PAVED OR WITHIN 18" OF PAVING)

NOTES:

1. CAUTION MUST BE EXERCISED TO ENSURE PROPER PLACEMENT OF EMBEDMENT MATERIAL UNDER THE HAUNCHES OF THE PIPE.
2. POLYETHYLENE ENCASING ON ALL D.I. PIPE, FITTINGS, VALVES & APPURTENANCES.
3. SEE SPECIFICATION SECTION 312333 FOR DESCRIPTION OF BACKFILL AND BEDDING MATERIAL.

AMERICAN WATER ENGINEERING, 1 WATER STREET, CAMDEN, NJ 08102

AMERICAN WATER STANDARD
CIVIL
WATER DISTRIBUTION SYSTEM
TRENCH - D.I. PIPE IN SOIL DETAIL

DATE: 23-OCT-2020	AMERICAN WATER ENGINEERING	SCALE: AS SHOWN
STANDARD DETAILS	APPROVED	SD- 55

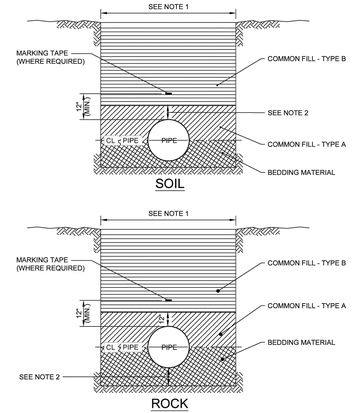

NOTES:

1. IN UPLAND AREAS USE 4" TOPSOIL, SEED, MULCH & FERTILIZE PER SPECIFICATIONS.

   IN WETLAND AREAS, TOP 18" TO BE BACKFILLED WITH NATIVE EXCAVATED SOIL AND REPLANTED WITH NATIVE VEGETATION.

   IN STREAM CHANNELS AND ADJACENT STREAM BANKS, TOP 12" RIP-RAP, VOIDS FILLED WITH NATIVE SOIL.
2. SEE SPECIFICATION SECTION 31 23 33 TRENCHING AND BACKFILLING.

AMERICAN WATER ENGINEERING, 1 WATER STREET, CAMDEN, NJ 08102

AMERICAN WATER STANDARD
CIVIL
WATER DISTRIBUTION SYSTEM
TRENCH BACKFILL MATERIALS UNPAVED AREAS DETAIL

DATE: 23-OCT-2020	AMERICAN WATER ENGINEERING	SCALE: AS SHOWN
STANDARD DETAILS	APPROVED	SD- 57

NOTE:

1. 6"x6" WOOD BLOCK MAY BE USED AS VALVE PAD WHERE APPROVED BY ENGINEER.

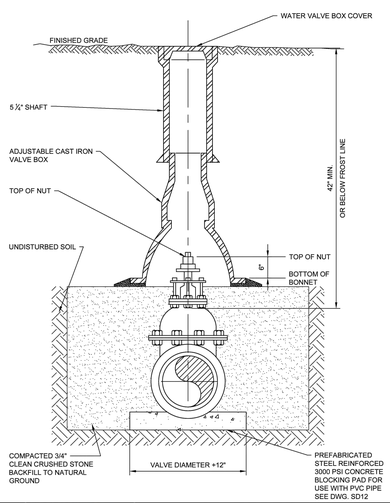

AMERICAN WATER ENGINEERING, 1 WATER STREET, CAMDEN, NJ 08102

AMERICAN WATER STANDARD
CIVIL
WATER DISTRIBUTION SYSTEM
VALVE BOX INSTALLATION FROST AREAS DETAIL

DATE: 23-OCT-2020	AMERICAN WATER ENGINEERING	SCALE: AS SHOWN
STANDARD DETAILS	APPROVED	SD- 59

NOTE:

1. IF PAD IS NOT TO BE POURED IMMEDIATELY AFTER VALVE BOX INSTALLATION, HOLE SHOULD BE BACKFILLED TO GRADE WITH ¾" CLEAN STONE BACKFILL.

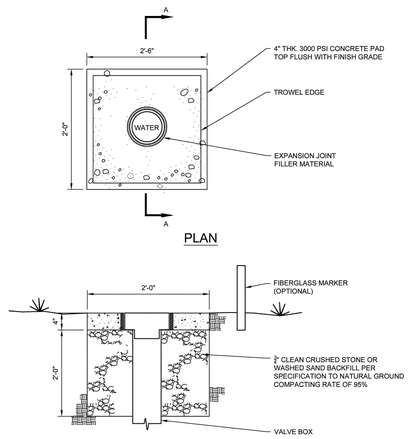

SECTION A-A

VALVE BOX DETAIL IN UNPAVED AREAS

AMERICAN WATER ENGINEERING, 1 WATER STREET, CAMDEN, NJ 08102

AMERICAN WATER STANDARD
CIVIL
WATER DISTRIBUTION SYSTEM
CONCRETE VALVE BOX PAD DETAIL

DATE: 09-OCT-2019	AMERICAN WATER ENGINEERING	SCALE: AS SHOWN
STANDARD DETAILS	APPROVED	SD- 60

SMITH® JAY R. SMITH MFG. CO.®
MEMBER OF MCWAD GROUP INTERNATIONAL
P.O. BOX 44930 (36544)
MONTGOMERY, ALABAMA 36109-0337 (USA)
TEL: 334-277-8520 FAX: 866-377-7918 www.jrsmith.com
MEMBER OF: ASPE, PDCA, NAPHCC

LOCATION

DOWNSPOUT BOOTS

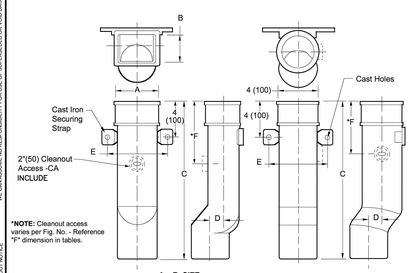

***NOTE:** Cleanout access varies per Fig. No. - Reference "F" dimension in tables.

A x B SIZE

Fig. 1785 Series . . . 4(100) x 3"(76) RECTANGULAR
Fig. 1786 Series . . . 5(125) x 4"(100) RECTANGULAR

Fig. 1787 Series . . . 4"(100) ROUND

4(100) x 3"(76) SIZE				
Figure No.	C Length	D	E	F
1785-12	12(305)			4 1/2(114)
1785-18	18(455)	1 1/2	6 5/8	9
1785-24	24(610)	(38)	(168)	(229)

5(125) x 4"(100) SIZE				
Figure No.	C Length	D	E	F
1786-24	24(610)	1(25)	7 5/8(194)	9(229)
1786-36	36(915)	1(25)	7 5/8(194)	9(229)

4"(100) ROUND SIZE				
Figure No.	C Length	D	E	F
1787-18	18(455)	1(25)	6 1/8(155)	5(125)

NOTE: All downspout boots have 4"(100) spigot end for connection with 4"(100) pipe.

REGULARLY FURNISHED:
Cast iron body and strap with 5/16"(8) Dia. cast holes for flat head bolts, typical. All shapes unpainted.

COLOR TO MATCH FASCIA

VARIATIONS:
2" Cleanout Access -CA

OPTIONAL MATERIALS:
Galvanized Cast Iron -G

NOTE: Dimensions shown in parentheses are in millimeters.

DRAWING NUMBER: 51785 | SIZE: A | SCALE: NONE | DATE: 5-24-85 | APPROVED BY: TD | CHECKED BY: TD | DRAWN BY: PL

WE GUARANTEE NO RESPONSIBILITY FOR USE OF DIFFERENCES ON VOID DATA

DIMENSIONS ARE SUBJECT TO MANUFACTURER'S TOLERANCE AND CHANGE WITHOUT NOTICE

FIGURE NUMBER: 1785,1786,1787

REV.	DATE	DESCRIPTION	BY	CKD. BY
H				
G	9-29-23	Removed Function	HS	CL
F	1-13-16	Revised Drawing	TBW	TWK
E	2-6-14	Rev. Dwg., Dim., Added Note	TBW	CL
	10-22-13	Added 1786-36		BW

WEIGHT: POUNDS | VOLUME: CUBIC FEET | FIGURE NUMBER: 1785,1786,1787

⚠ **WARNING:** Cancer and Reproductive Harm - www.P65Warnings.ca.gov

HERBERT, ROWLAND & GRUBIC, INC.
1275 GLENLIVET DRIVE
SUITE 145
ALLENTOWN, PA 18106
610.351.0311 | hrg-inc.com

PRELIMINARY / FINAL LAND DEVELOPMENT PLAN
FOR
EMERGENCY SERVICES FACILITY

EXETER TOWNSHIP
4975 DEMOSS ROAD
READING, PA 19606

EXETER TOWNSHIP, BERKS COUNTY, PENNSYLVANIA

PROFESSIONAL SEAL:

COMMONWEALTH OF PENNSYLVANIA — REGISTERED PROFESSIONAL — DENNIS J. REICHEL — ENGINEER NO. PE070767 — 10/01/2026

HRG PROJECT NUMBER:	R006367.0427
PLAN DATE:	2026.02.18
DRAWING SCALE:	AS SHOWN
PROJ. MANAGER:	DENNIS REICHEL

REVISIONS

NO.	DATE	DESCRIPTION
1	2026.03.16	REV. AS PER 3/16/26 PLANNING COMMISSION COMMENTS
2	2026.06.15	50% CONSTRUCTION PLAN
3	2026.08.21	80% CONSTRUCTION PLAN
4	2026.10.01	BID SET
5		
6		
7		
8		
9		

SHEET TITLE:
SITE DETAILS

SHEET: **DT-08** | **22**

MW STUDIOS
ARCHITECTURE + MASTER PLANNING
8098 SANDPIPER CIR, SUITE
NOTTINGHAM, MD 21236
☎ 410-344-1460
✉ INFO@MWSARCH.COM
WWW.MWSARCH.COM

CONSULTANT:

HERBERT, ROWLAND & GRUBIC, INC.
1275 GLENLIVET DRIVE
SUITE 145
ALLENTOWN, PA 18106
610.351.0311 | hrg-inc.com

SEAL:

COMMONWEALTH OF PENNSYLVANIA — REGISTERED PROFESSIONAL — DENNIS J. REICHEL — ENGINEER NO. PE070767 — 10/01/2026

EXETER TOWNSHIP
EMERGENCY SERVICES FACILITY
70 GIBRALTAR ROAD
READING, PA 19606

PROJECT NUMBER: 25-049

SUBMISSION: BID SET

ORIGINAL ISSUE DATE: 10/01/2026

SHEET REVISION SCHEDULE:
No. DATE

REFERENCE PLAN

SHEET NUMBER:

C22

ALL DRAWINGS ARE PROTECTED BY FEDERAL COPYRIGHT BY MANNS WOODWARD STUDIOS, INC. AND CAN NOT BE REPRODUCED OR MODIFIED IN ANY MANNER WITHOUT WRITTEN PERMISSION. DOCUMENTS MAY NOT BE USED IN PART OR WHOLE TO DEVELOP THE DESIGN OF ANOTHER BUILDING WITHOUT EXPRESS WRITTEN PERMISSION BY MANNS WOODWARD STUDIOS.

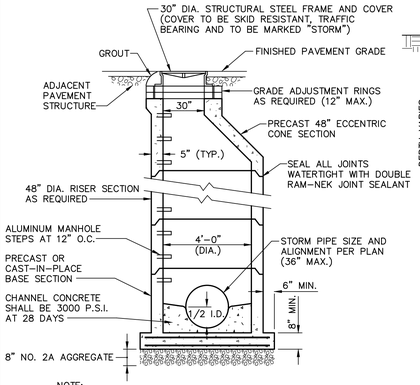

NOTE:
1. CONSTRUCT MANHOLE IN ACCORDANCE WITH PENNDOT PUBLICATION 72, RC-39 FOR PRECAST CONCRETE MANHOLES.
2. ALL MATERIALS AND CONSTRUCTION SHALL MEET THE REQUIREMENTS OF PENNDOT PUBLICATION 408.
3. USE FLAT TOP MANHOLES WHERE DEPTHS ARE LESS THAN 6' DEEP.

STORM SEWER MANHOLE
NOT TO SCALE

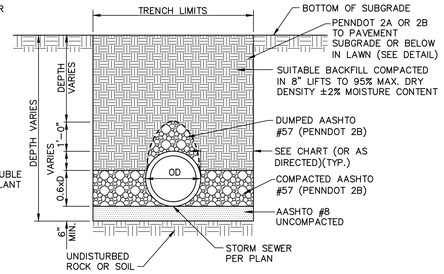

STORM TRENCH DETAIL (CONCRETE)
NOT TO SCALE

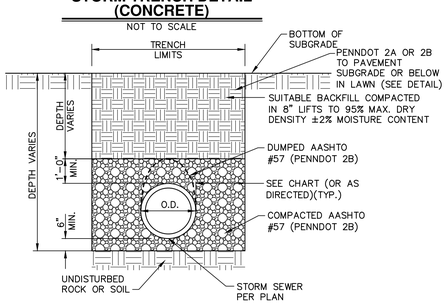

STORM TRENCH DETAIL (PLASTIC OR METAL)
NOT TO SCALE

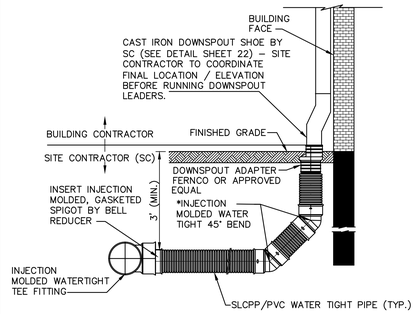

NOTES:
* INJECTION MOLDED FITTINGS ARE AVAILABLE IN TEES, WYES, REDUCERS, 45° BENDS AND BELL/BELL COUPLERS.

TYPICAL BUILDING DOWNSPOUT
NOT TO SCALE

BICYCLE-SAFE STRUCTURAL STEEL GRATE
NOT TO SCALE

STORM TRENCH DETAIL (STANDARD SPEC.)
NOT TO SCALE

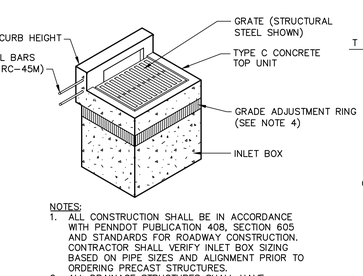

NOTES:
1. ALL CONSTRUCTION SHALL BE IN ACCORDANCE WITH PENNDOT PUBLICATION 408, SECTION 605 AND STANDARDS FOR ROADWAY CONSTRUCTION. CONTRACTOR SHALL VERIFY INLET BOX SIZING BASED ON PIPE SIZES AND ALIGNMENT PRIOR TO ORDERING PRECAST STRUCTURES.
2. ALL DRAINAGE STRUCTURES SHALL HAVE POURED-IN-PLACE CONCRETE CHANNEL BOTTOMS.
3. NO PIPES SHALL ENTER INLET BOX AT CORNER.
4. PROVIDE GRADE ADJUSTMENT RINGS WHEN REQUIRED. (SEE RC-45M FOR DETAILS)

TYPE C INLET DETAIL
NOT TO SCALE

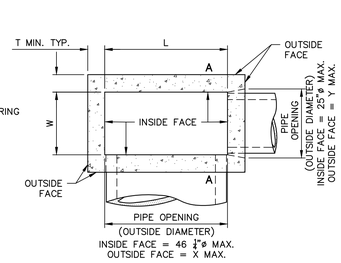

PLAN
(STANDARD BOX)

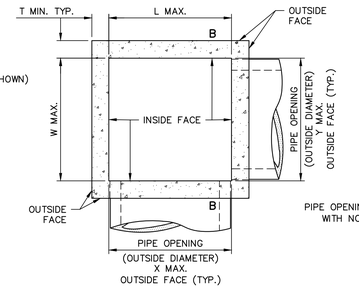

PLAN
(TYPE 4 THROUGH TYPE 10 AND TYPE D-H BOXES)

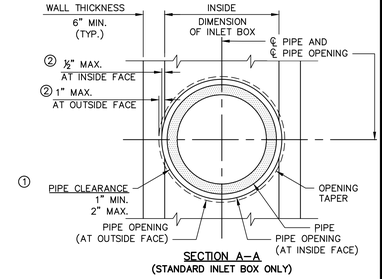

SECTION A-A
(STANDARD INLET BOX ONLY)

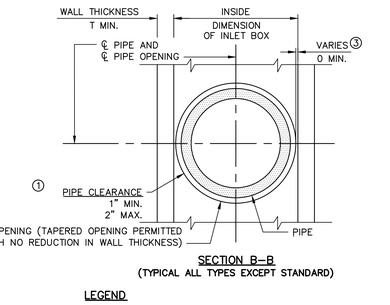

SECTION B-B
(TYPICAL ALL TYPES EXCEPT STANDARD)

LEGEND
① OUTSIDE DIAMETER OF PIPE TO PIPE OPENING
② REDUCTION IN WALL THICKNESS DIMENSION
③ INSIDE FACE OF BOX WALL TO OUTSIDE DIAMETER OF PIPE OPENING

BOX TYPE	INSIDE BOX DIMENSIONS W	INSIDE BOX DIMENSIONS L	WALL THICKNESS T	PIPE OPENING AT OUTSIDE FACE X	PIPE OPENING AT OUTSIDE FACE Y
STANDARD	2'-0"	3'-9¾"	6"	47¾"	26"
TYPE 4	4'-0"	4'-0"	6"	48"	48"
TYPE 5	5'-0"	5'-0"	6"	60"	60"
TYPE 6	6'-0"	6'-0"	6"	72"	72"
TYPE 7	7'-0"	7'-0"	8"	84"	84"
TYPE 8	8'-0"	8'-0"	8"	96"	96"
TYPE 9	9'-0"	9'-0"	8"	108"	108"
TYPE 10	10'-0"	10'-0"	8"	120"	120"
TYPE D-H	2'-6"	8'-3"	6"	99"	30"

STORM PIPE TRENCH WIDTHS	
PIPE DIA (IN.)	TRENCH WIDTH (IN.)
≤ 6"	OD + 12"
8-10"	OD + 16"
12-24"	OD + 24"
30-42"	OD + 30"
48-60"	OD + 36"

NOTES
1. CONSTRUCT INLET BOXES IN ACCORDANCE WITH THE REQUIREMENTS OF PADOT PUB. 408, SECTION 714 AND PUB. 72M, RC-46M.
2. PERMIT ONLY PRECAST INLET BOXES SUPPLIED BY A MANUFACTURER LISTED IN PADOT BULLETIN 15. USE CLASS AA CEMENT CONCRETE FOR PRECAST BOXES.
3. SEE PADOT PUB 72M, RC-43M FOR CONCRETE TOP UNITS, TRANSITION SLABS, RISER SECTIONS AND GRADE ADJUSTMENT RINGS.
4. PROVIDE 2" DIAMETER WEEPHOLES IN THE WALLS WHEN THE DEPTH BETWEEN THE FINISHED GRADE ELEVATION AND THE TOP OF THE SLAB ELEVATION IS GREATER THAN (10'-0").
   - VERTICAL PLACEMENT: 5'-0" MAXIMUM SPACING
   - HORIZONTAL PLACEMENT: PLACE WEEPHOLES IN THE SIDE WALLS THAT ARE PERPENDICULAR TO TRAFFIC.
   - LOCATE WEEPHOLES A MINIMUM OF 6" FROM PIPE OPENING OR JOINTS.
   - LOCATE WEEPHOLES A MINIMUM OF 1'-0" ABOVE OUTLET PIPE INVERT.
5. LOCATE PIPE OR PIPES, AS INDICATED, WITH THE INLET BOTTOM SHAPED TO CHANNEL THE FLOW TOWARD THE OUTLET PIPE. WHEN PROJECT CONDITIONS REQUIRE PIPE BLOCKOUTS TO BE FORMED WITHIN 4" FROM THE TOP OF THE INLET BOX, PROVIDE AN ADDITIONAL #3 REINFOREMENT BAR LOCATED 1 5/8" FROM THE TOP OF THE INLET BASE, FULL WIDTH ALONG THE INLET FACE. REMOVE ANY VISIBLE PORTION OF THE BAR, IF REQUIRED DURING INSTALLATION AND PRIOR TO JOINING THE PIPE TO THE INLET. IF REINFORCED CONCRETE PIPE IS USED, THE PIPE BLOCKOUT MAY BE FORMED 'FLUSH' WITH THE INLET BASE. LIMIT PIPE BLOCKOUT OF WALL TO 1".
6. PLACE SUBBASE MATERIAL MEETING THE REQUIREMENTS OF PADOT PUB. 408, SECTION 350.2, TO A DEPTH OF 12", IN LAYERS 4" THICK, COMPACTED TO A DENSITY SATISFACTORY TO THE ENGINEER.
7. PROVIDE SUITABLE LIFTING DEVICES FOR HANDLING AND INSTALLATION. GALVANIZE METAL DEVICES AS SPECIFIED IN PADOT PUB. 408 SECTION 1105.
8. PROVIDE MANHOLE STEPS WHEN THE DEPTH BETWEEN THE FINISHED GRADE ELEVATION AND THE TOP OF THE BOTTOM SLAB ELEVATION IS GREATER THAN 5'-0". SHALLOW RECESSES, ON THE INSIDE FACE OF THE INLET, NOT GREATER THAN 3/8" IN DEPTH, FORMED BY MAGNETIC STEP FORMERS ARE ACCEPTABLE AND DO NOT REQUIRE PATCHING. FOR DETAILS, REFER TO RC-39M.

PRECAST INLET BOXES (PUB 72M, RC-46M)
NOT TO SCALE

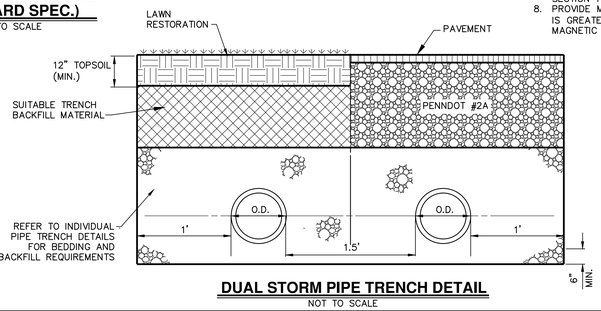

DUAL STORM PIPE TRENCH DETAIL
NOT TO SCALE

ALL DRAWINGS ARE PROTECTED BY FEDERAL COPYRIGHT BY MANNS WOODWARD STUDIOS, INC. AND CAN NOT BE REPRODUCED OR MODIFIED IN ANY MANNER WITHOUT WRITTEN PERMISSION. DOCUMENTS MAY NOT BE USED IN PART OR WHOLE TO DEVELOP THE DESIGN OF ANOTHER BUILDING WITHOUT EXPRESS WRITTEN PERMISSION BY MANNS WOODWARD STUDIOS.

MW STUDIOS
ARCHITECTURE + MASTER PLANNING
8098 SANDPIPER CIR, SUITE
NOTTINGHAM, MD 21236
☎ 410-344-1460
✉ INFO@MWSARCH.COM
WWW.MWSARCH.COM

CONSULTANT:
HRG
HERBERT, ROWLAND & GRUBIC, INC.
1275 GLENLIVET DRIVE
SUITE 145
ALLENTOWN, PA 18106
610.351.0311 | hrg-inc.com

SEAL:

COMMONWEALTH OF PENNSYLVANIA
REGISTERED PROFESSIONAL
DENNIS J REICHEL
ENGINEER
NO. PE070767
10/01/2026

HRG
HERBERT, ROWLAND & GRUBIC, INC.
1275 GLENLIVET DRIVE
SUITE 145
ALLENTOWN, PA 18106
610.351.0311 | hrg-inc.com

PRELIMINARY / FINAL LAND DEVELOPMENT PLAN
FOR
EMERGENCY SERVICES FACILITY
EXETER TOWNSHIP
4975 DEMOSS ROAD
READING, PA 19606
EXETER TOWNSHIP, BERKS COUNTY, PENNSYLVANIA

PROFESSIONAL SEAL:

REVISIONS			
NO.	DATE	DESCRIPTION	
1	2026.03.18	REV AS PER 3/16/26 PLANNING COMMISSION COMMENTS	
2	2026.06.15	50% CONSTRUCTION PLAN	
3	2026.08.21	90% CONSTRUCTION PLAN	
4	2026.10.01	BID SET	
5			
6			
7			
8			
9			

HRG PROJECT NUMBER: R006367.0427
PLAN DATE: 2026.02.18
DRAWING SCALE: AS SHOWN
PROJ. MANAGER: DENNIS REICHEL

SHEET TITLE:
SITE DETAILS

SHEET: DT-09 | 23

EXETER TOWNSHIP
EMERGENCY SERVICES FACILITY
70 GIBRALTAR ROAD
READING, PA 19606

PROJECT NUMBER:
25-049

SUBMISSION:
BID SET

ORIGINAL ISSUE DATE:
10/01/2026

SHEET REVISION SCHEDULE:
No. DATE

REFERENCE PLAN

SHEET NUMBER:
C23

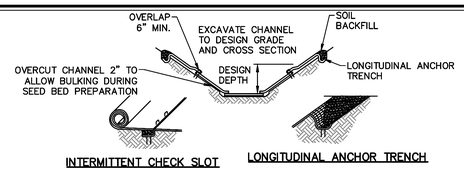

INTERMITTENT CHECK SLOT

LONGITUDINAL ANCHOR TRENCH

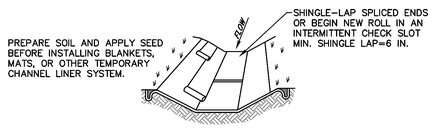

ISOMETRIC VIEW

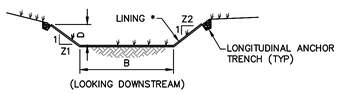

CHANNEL CROSS-SECTION

* SEE MANUFACTURER'S LINING INSTALLATION DETAIL FOR STAPLE PATTERNS, VEGETATIVE STABILIZATION SPECIFICATIONS FOR SOIL AMENDMENTS, SEED MIXTURES AND MULCHING INFORMATION

CHANNEL NO.	SLOPE/ STATIONS	BOTTOM WIDTH B (FT)	DEPTH D (FT)	TOP WIDTH W (FT)	Z1 (FT)	Z2 (FT)	LINING *
1A	1.50%/6.90%	3	1.1	9.6	3	3	S75/VEG
1B	1.50%	4	1.5	13	3	3	S75/VEG
2	8.46%	4	1	10	3	3	S200/VEG

NOTES:

1. ANCHOR TRENCHES SHALL BE INSTALLED AT BEGINNING AND END OF CHANNEL IN THE SAME MANNER AS LONGITUDINAL ANCHOR TRENCHES.
2. CHANNEL DIMENSIONS SHALL BE CONSTANTLY MAINTAINED. CHANNEL SHALL BE CLEANED WHENEVER TOTAL CHANNEL DEPTH IS REDUCED BY 25% AT ANY LOCATION. SEDIMENT DEPOSITS SHALL BE REMOVED WITHIN 24 HOURS OF DISCOVERY OR AS SOON AS SOIL CONDITIONS PERMIT ACCESS TO CHANNEL WITHOUT FURTHER DAMAGE. DAMAGED LINING SHALL BE REPAIRED OR REPLACED WITHIN 48 HOURS OF DISCOVERY.
3. NO MORE THAN ONE THIRD OF THE SHOOT (GRASS LEAF) SHALL BE REMOVED IN ANY MOWING. GRASS HEIGHT SHALL BE MAINTAINED BETWEEN 2 AND 3 INCHES UNLESS OTHERWISE SPECIFIED. EXCESS VEGETATION SHALL BE REMOVED FROM PERMANENT CHANNELS TO ENSURE SUFFICIENT CHANNEL CAPACITY.

STANDARD CONSTRUCTION DETAIL #6-1
VEGETATED CHANNEL

NOT TO SCALE

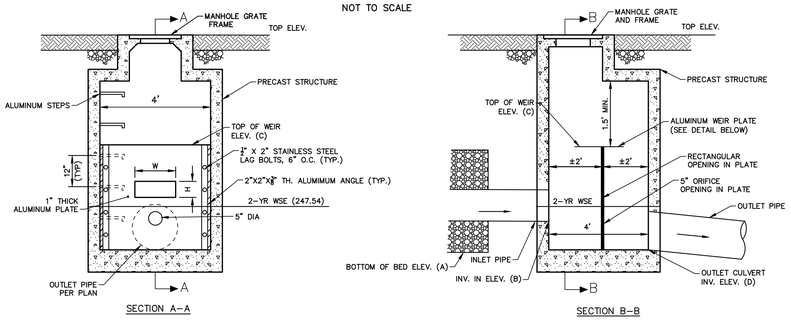

NOTES:

1. PROVIDE FIELD PLACED CONCRETE FILL IN THE BOTTOM OF ALL OUTLET STRUCTURES TO A DEPTH OF 1/2 OF THE PIPE I.D. PROVIDE AN ADEQUATE FLOW CHANNEL FOR THE TRANSITION TO THE OUTLET PIPE. SHAPE BOX BOTTOM FOR POSITIVE DRAINAGE.
2. CONSTRUCT THE REINFORCED CONCRETE FOUNDATION TO A DIMENSION 24" LARGER THAN THE OUTSIDE DIMENSIONS OF THE OUTLET STRUCTURE.
3. CONSTRUCT OUTLET STRUCTURE IN ACCORDANCE WITH PENNDOT PUBLICATION 72, RC-34 FOR PRECAST CONCRETE INLET BOXES.
4. INSTALL MANHOLE STEPS IN OUTLET STRUCTURES. STEPS SHALL BE PLACED ON THE OPPOSITE SIDE OF THE BOX FROM THE INLET PIPE. SEE COPOLYMER POLYPROPYLENE PLASTIC MANHOLE STEP DETAIL.
5. PROVIDE A 1" DIAMETER WEEP HOLE ON THE BOTTOM OF THE STRUCTURE.

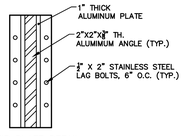

WEIR PLATE DETAIL

UNDERGROUND DETENTION BED	OUTLET STRUCTURE	BOTTOM OF BED (A)	INLET PIPE INV. IN (B)	CIRCULAR OPENING INV. EL. (FT)	DIAMETER D (IN)	RECTANGULAR OPENING INV. EL. (FT.)	WIDTH W (IN.)	HEIGHT H (IN.)	TOP OF WEIR ELEV. (C)	WEIR LENGTH (FT)	OUTLET CULVERT INV. ELEV. (D)	CULVERT DIAMETER (IN.)	TOP ELEV. (FT)
SCM-3	OS-3	246.00	246.55	247.25	5.0	N/A	N/A	N/A	249.83	4	246.45	15	253.06

SCM-3 UNDERGROUND INFILTRATION BED OUTLET STRUCTURE DETAIL

NOT TO SCALE

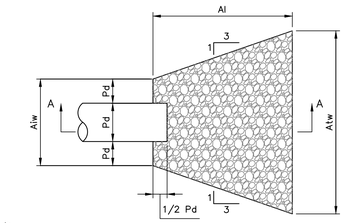

PLAN VIEW

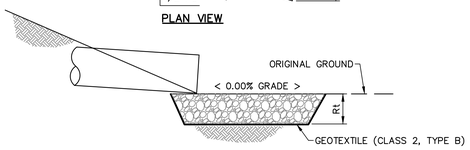

SECTION A-A

OUTLET NO.	PIPE DIA Pd (IN)	RIPRAP SIZE R-_	RIPRAP THICK. Rt (IN)	APRON LENGTH Al (FT)	APRON INITIAL WIDTH Aiw (FT)	APRON TERMINAL WIDTH Atw (FT)
EW-1	24 x 2	4	18	12	12	22.5
EW-2A.1	15	4	18	10	4	12
EW-2B.1	15	4	18	10	4	12

NOTES:

ALL APRONS SHALL BE CONSTRUCTED TO THE DIMENSIONS SHOWN. TERMINAL WIDTHS SHALL BE ADJUSTED AS NECESSARY TO MATCH RECEIVING CHANNELS.

ALL APRONS SHALL BE INSPECTED AT LEAST WEEKLY AND AFTER EACH RUNOFF EVENT. DISPLACED RIPRAP WITHIN THE APRON SHALL BE REPLACED IMMEDIATELY.

EXTEND RIPRAP ON BACK SIDE OF APRON TO AT LEAST 1/2 DEPTH OF PIPE ON BOTH SIDES TO PREVENT SCOUR AROUND THE PIPE.

STANDARD CONSTRUCTION DETAIL #9-2
RIPRAP APRON AT PIPE OUTLET
NO FLARED ENDWALL

NOT TO SCALE

MANHOLE (MH-3)

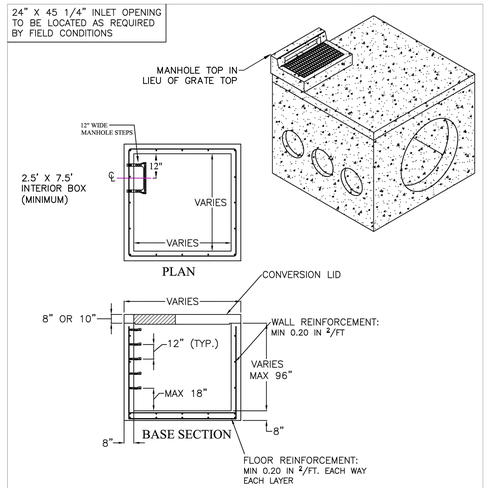

SPECIFICATIONS:

MINIMUM CONCRETE STRENGTH 4000 PSI @ 28 DAYS (PENNDOT CLASS AA)
MATERIALS AND WORKMANSHIP IN ACCORDANCE WITH THE REQUIREMENTS OF PENNDOT PUBLICATION 408 SECTION 605 & 714
STEEL REINFORCEMENT A615 GRADE 60 HORIZONTAL AND VERTICAL

Continental Concrete Products, Inc.
1 South Grosstown Rd.
Pottstown, PA 19464
Phone: (610) 327-3700
Fax: (610) 327-9488

MODIFIED LARGE INLET BOX FOR LARGE DIA. PIPE & MULTIPLE PARALLEL PIPE OPENINGS

SIGNATURE OF APPROVAL	DATE	AR / DWG	STRUCTURE
	2/08/16	MLIB	

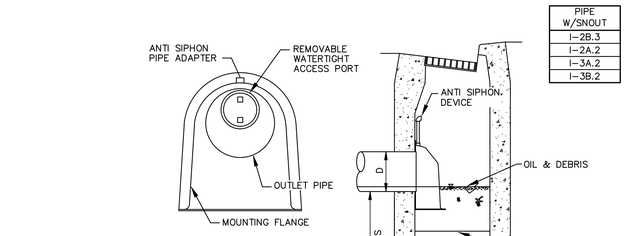

PIPE W/SNOUT
I-2B.3
I-2A.2
I-3A.2
I-3B.2

PIPE DIA.	SNOUT SIZE
12"	18F OR 18R
15"	18F OR 18R
18"	24F OR 30R
24"	30F OR 30R
30"	48F
36"	48F

NOTES:

1. POSITION HOOD SO THAT BOTTOM FLANGE OF SNOUT IS 1/2 THE PIPE DIAMETER BELOW THE BOTTOM OF THE PIPE.
2. CONTACT MANUFACTURER FOR ADDITIONAL INSTALLATION DETAILS AND PRODUCT AVAILABILITY.
3. SUMP DEPTH OF 36" MIN. FOR ≤ 12" DIA. OUTLET. FOR OUTLETS ≥ 15", DEPTH = 2.5-3 TIMES DIA.

"SNOUT" OIL AND DEBRIS SEPARATOR

NOT TO SCALE

MONARCH PRODUCTS COMPANY, INC.
YORK HAVEN, PA.

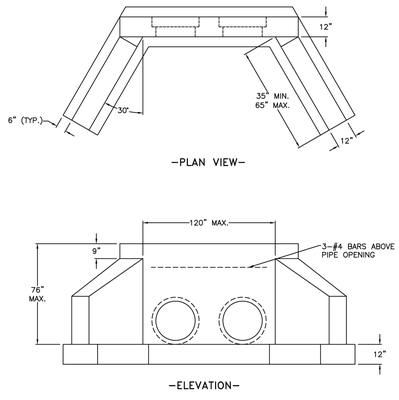

NOTES:
-ALL EXPOSED EDGES TO HAVE ¾" CHAMFER
-MINIMUM 4000 P.S.I. CONCRETE
-REINFORCEMENT TO BE 0.12 IN²/FT. EACH WAY

TYPE DW ENDWALL ADJUSTABLE SIZES | DWG. OS-4

ALL DRAWINGS ARE PROTECTED BY FEDERAL COPYRIGHT BY MANNS WOODWARD STUDIOS, INC. AND CAN NOT BE REPRODUCED OR MODIFIED IN any MANNER WITHOUT WRITTEN PERMISSION. DOCUMENTS MAY NOT BE USED IN PART OR WHOLE TO DEVELOP THE DESIGN OF ANOTHER BUILDING WITHOUT EXPRESS WRITTEN PERMISSION BY MANNS WOODWARD STUDIOS.

MW STUDIOS
ARCHITECTURE + MASTER PLANNING
8098 SANDPIPER CIR, SUITE
NOTTINGHAM, MD 21236
☎ 410-344-1460
✉ INFO@MWSARCH.COM
WWW.MWSARCH.COM

CONSULTANT:
HRG
HERBERT, ROWLAND & GRUBIC, INC.
1275 GLENLIVET DRIVE
SUITE 145
ALLENTOWN, PA 18106
610.351.0311 | hrg-inc.com

HRG
HERBERT, ROWLAND & GRUBIC, INC.
1275 GLENLIVET DRIVE
SUITE 145
ALLENTOWN, PA 18106
610.351.0311 | hrg-inc.com

SEAL:

COMMONWEALTH OF PENNSYLVANIA
REGISTERED PROFESSIONAL
DENNIS J REICHEL
ENGINEER NO. PE070787
10/09/2026

PRELIMINARY / FINAL LAND DEVELOPMENT PLAN
FOR
EMERGENCY SERVICES FACILITY
EXETER TOWNSHIP
4975 DEMOSS ROAD
READING, PA 19606
EXETER TOWNSHIP, BERKS COUNTY, PENNSYLVANIA

PROFESSIONAL SEAL:

HRG PROJECT NUMBER: R006367.0427
PLAN DATE: 2026.02.18
DRAWING SCALE: AS SHOWN
PROJ. MANAGER: DENNIS REICHEL

NO.	DATE	DESCRIPTION
1	2026.03.18	REV. AS PER 3/16/26 PLANNING COMMISSION COMMENTS
2	2026.06.15	50% CONSTRUCTION PLAN
3	2026.08.21	90% CONSTRUCTION PLAN
4	2026.10.01	BID SET
5		
6		
7		
8		
9		

REVISIONS

SHEET TITLE:
SITE DETAILS

SHEET: DT-10 | 24

EXETER TOWNSHIP
EMERGENCY SERVICES FACILITY
70 GIBRALTAR ROAD
READING, PA 19606

PROJECT NUMBER:
25-049

SUBMISSION:
BID SET

ORIGINAL ISSUE DATE:
10/01/2026

SHEET REVISION SCHEDULE:
No. DATE

REFERENCE PLAN

SHEET NUMBER:
C24

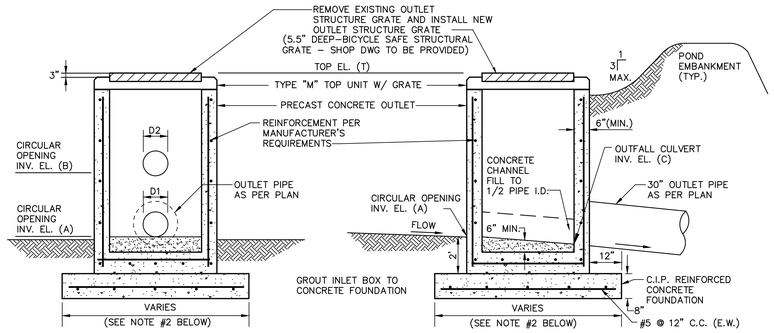

SIDE ELEVATION

FRONT ELEVATION

NOTES:
1. PROVIDE FIELD PLACED CONCRETE FILL IN THE BOTTOM OF ALL OUTLET STRUCTURES TO A DEPTH OF 1/2 OF THE PIPE I.D. PROVIDE AN ADEQUATE FLOW CHANNEL FOR THE TRANSITION TO THE OUTLET PIPE. SHAPE BOX BOTTOM FOR POSITIVE DRAINAGE.
2. CONSTRUCT THE REINFORCED CONCRETE FOUNDATION TO A DIMENSION 24" LARGER THAN THE OUTSIDE DIMENSIONS OF THE OUTLET STRUCTURE.
3. CONSTRUCT OUTLET STRUCTURE IN ACCORDANCE WITH PENNDOT PUBLICATION 72, RC–34 FOR PRECAST CONCRETE INLET BOXES.

BASIN NO.	TOP ELEVATION T (FT)	INVERT A (FT)	DIAMETER D1 (IN)	INVERT B (FT)	DIAMETER D2 (IN)	INVERT C (FT)	2–YR WSE (FT)
SCM–1	246.48	243.50	6	244.43	12	241.63	246.57

EXISTING DRY EXTENDED DETENTION BASIN OUTLET STRUCTURE DETAIL (SCM-1)/GRATE REPLACEMENT

NOT TO SCALE

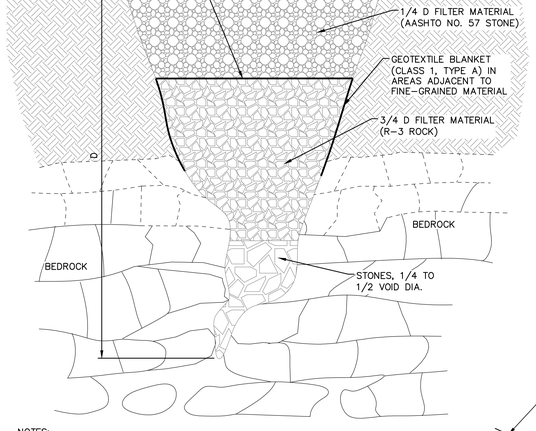

NOTES:
1. EXCAVATE LOOSE MATERIAL FROM THE SINKHOLE AND EXPOSE SOLUTION VOID(S) IF POSSIBLE. ENLARGE SINKHOLE IF NECESSARY TO ALLOW FOR INSTALLATION OF FILTER MATERIAL. OSHA REGULATIONS MUST BE FOLLOWED AT ALL TIMES DURING EXCAVATION.
2. STONES USED FOR THE "BRIDGE" AND FILTERS SHALL HAVE A MODERATELY HARD ROCK STRENGTH AND BE RESISTANT TO ABRASION AND DEGRADATION. SHALE AND SIMILAR SOFT AND/OR NON–DURABLE ROCK ARE NOT ACCEPTABLE.
3. DUE TO THE VARIABLE NATURE OF SINKHOLES, THEY SHOULD BE REPAIRED UNDER THE DIRECT OBSERVATION AND SUPERVISION OF A PROFESSIONAL GEOLOGIST OR LICENSED ENGINEER.

SINKHOLE REPAIR WITH A PERVIOUS COVER

NOT TO SCALE

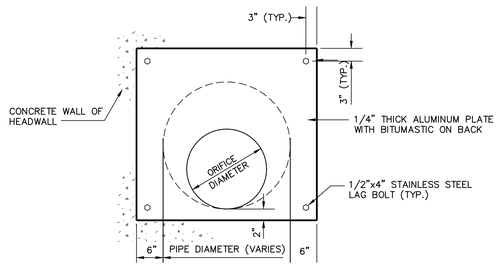

EXISTING HEADWALL ORIFICE PLATE DETAIL (SCM-1)

NOT TO SCALE

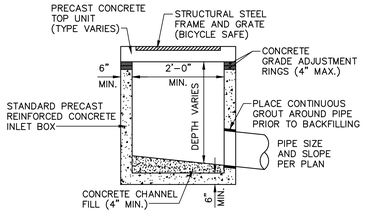

NOTES:
1. CONSTRUCT IN ACCORDANCE WITH PENNDOT PUBLICATION 408, CURRENT EDITION, AND ROADWAY CONSTRUCTION DRAWING (RC–34).
2. PROVIDE ALUMINUM STEPS IN INLETS OVER 5' DEEP.

INLET BOX DETAIL

NOTES:
1. CONSTRUCT IN ACCORDANCE WITH PENNDOT PUBLICATION 72 RC–31
2. FOR PIPE SIZES LESS THAN 36" CONSTRUCT WING WALL TO DIMENSIONS FOR 36" PIPE DIAMETER AS LISTED IN PENNDOT RC–31.

TYPE D-W ENDWALL DETAIL

NOT TO SCALE

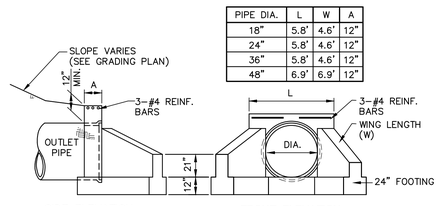

PIPE DIA.	L	W	A
18"	5.8'	4.6'	12"
24"	5.8'	4.6'	12"
36"	5.8'	4.6'	12"
48"	6.9'	6.9'	12"

SIDE ELEVATION

FRONT ELEVATION

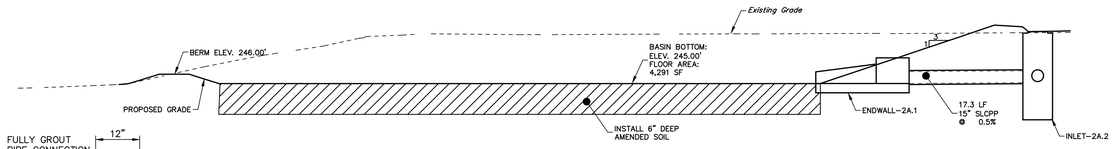

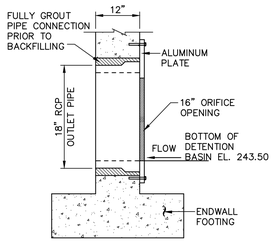

ORIFICE PLATE MOUNTING DETAIL

NOTES:
1. AMENDED SOIL SHALL HAVE A SANDY LOAM, LOAMY SAND OR LOAM TEXTURE PER USDA TEXTURAL TRIANGLE. MAXIMUM CLAY CONTENT <5%. SOIL MIXTURE SHALL BE 60% TOPSOIL, 20% SAND AND 20% COMPOST (MEETING U.S. COMPOSTING COUNCIL SEAL OF TESTING ASSURANCE (STA) PROGRAM OR APPROVED EQUAL).
2. IF BEDROCK OR PINNACLES ARE ENCOUNTERED DURING CONSTRUCTION OF THE BASIN, EXCAVATE ROCK TO A MINIMUM OF TWO FEET BELOW THE BASIN BOTTOM. INCREASE THE AMENDED SOIL TO THE BEDROCK OR PINNACLES.

INFILTRATION BASIN (SCM-2) CROSS SECTION

NOT TO SCALE

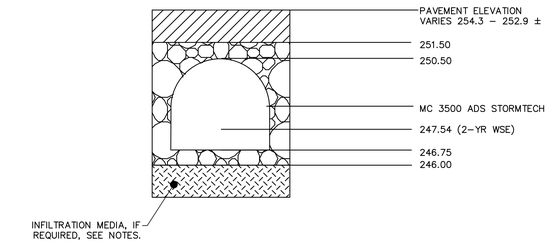

NOTES:
1. INFILTRATION MEDIA SHALL CONSIST OF GRANULAR BLENDED SOIL MIXTURES CONTAINING AT LEAST 70 PERCENT SAND AND LESS THAN 20 PERCENT SILT. ENGINEERED FILTER MEDIA SHOULD PROVIDE A MINIMUM INFILTRATION RATE OF 1.5 INCH/HOUR WITH A MAXIMUM INFILTRATION RATE ON THE ORDER OF SIX INCHES PER HOUR. ALL INFILTRATION/FILTER MEDIA SHALL BE WRAPPED WITH A SUITABLE FABRIC TO REDUCE CLOGGING.
2. IF BEDROCK IS ENCOUNTERED DURING EXCAVATION OF BED, EXCAVATE ROCK TO A MINIMUM OF TWO FEET BELOW THE BED BOTTOM. INCREASE INFILTRATION MEDIA DEPTH TO BED ROCK.
3. IF PERCHED WATER IS ENCOUNTERED DURING CONSTRUCTION OF THE BED, OVER EXCAVATION MAY BE REQUIRED TO ALLEVIATE THE CAUSE OF THE TRAPPED SURFACE WATER. INCREASE THE INFILTRATION MEDIA DEPTH TO THE BOTTOM OF THE EXCAVATION.

INFILTRATION BED (SCM-3) DETAIL

NOT TO SCALE

PROPOSED ELEVATIONS	
MAXIMUM ALLOWABLE GRADE (TOP OF PAVEMENT/UNPAVED):	258.50
MINIMUM ALLOWABLE GRADE (UNPAVED WITH TRAFFIC):	252.50
MINIMUM ALLOWABLE GRADE (UNPAVED NO TRAFFIC):	252.00
MINIMUM ALLOWABLE GRADE (TOP OF RIGID CONCRETE PAVEMENT):	252.00
MINIMUM ALLOWABLE GRADE (BASE OF FLEXIBLE PAVEMENT):	251.50
TOP OF STONE:	251.50
TOP OF MC–3500 CHAMBER:	250.50
18" x 18" TOP MANIFOLD INVERT:	248.42
24" ISOLATOR ROW PLUS INVERT:	246.92
18" x 18" BOTTOM MANIFOLD INVERT:	246.92
18" BOTTOM CONNECTION INVERT:	246.90
BOTTOM OF MC–3500 CHAMBER:	246.75
BOTTOM OF STONE:	246.00

PROPOSED LAYOUT	
84	STORMTECH MC–3500 CHAMBERS
12	STORMTECH MC–3500 END CAPS
12	STONE ABOVE (in)
9	STONE BELOW (in)
40	STONE VOID
16485	INSTALLED SYSTEM VOLUME (CF) (PERIMETER STONE INCLUDED) (COVER STONE INCLUDED) (BASE STONE INCLUDED)
4925	SYSTEM AREA (SF)
315.2	SYSTEM PERIMETER (ft)

PART TYPE	ITEM ON LAYOUT	DESCRIPTION	INVERT*	MAX FLOW
PREFABRICATED END CAP	A	24" BOTTOM PRE–CORED END CAP. PART#: MC3500IEPP24BC / TYP OF ALL 24" BOTTOM CONNECTIONS AND ISOLATOR PLUS ROWS		
PREFABRICATED END CAP	B	18" TOP PRE–CORED END CAP. PART#: MC3500IEPP18TC / TYP OF ALL 18" TOP CONNECTIONS		
PREFABRICATED END CAP	C	18" BOTTOM PRE–CORED END CAP. PART#: MC3500IEPP18BC / TYP OF ALL 18" BOTTOM CONNECTIONS		
FLAMP	D	INSTALL FLAMP ON 24" ACCESS PIPE / PART#: MCFLAMP (TYP 2 PLACES)		
MANIFOLD	E	18" x 18" TOP MANIFOLD, ADS N–12	20.03"	
MANIFOLD	F	18" x 18" TOP MANIFOLD, ADS N–12	20.03"	
MANIFOLD	G	18" x 18" BOTTOM MANIFOLD, ADS N–12	1.77"	
PIPE CONNECTION	H	18" BOTTOM CONNECTION	1.77"	
CONCRETE MANHOLE (INLET W/ ISO PLUS ROW)	I	4" DIAMETER (24.00" SUMP MIN)		16.2 CFS IN
CONCRETE MANHOLE (INLET W/ ISO PLUS ROW)	J	4" DIAMETER (24.00" SUMP MIN)		11.0 CFS IN
CONCRETE MANHOLE (OUTLET)	K	4" DIAMETER (DESIGN BY ENGINEER)		8.0 CFS OUT
INSPECTION PORT	L	4" SEE DETAIL (TYP 3 PLACES)		

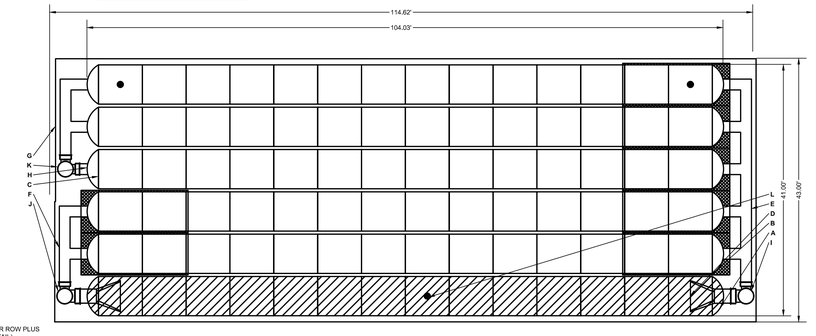

ISOLATOR ROW PLUS (SEE DETAIL)

PLACE MINIMUM 17.50' OF ADSPLUS125 WOVEN GEOTEXTILE OVER BEDDING STONE AND UNDERNEATH CHAMBER FEET FOR SCOUR PROTECTION AT ALL CHAMBER INLET ROWS

— — — BED LIMITS

NOTES
- THE SITE DESIGN ENGINEER MUST REVIEW ELEVATIONS AND IF NECESSARY ADJUST GRADING TO ENSURE THE CHAMBER COVER REQUIREMENTS ARE MET.
- **NOT FOR CONSTRUCTION**: THIS LAYOUT IS FOR DIMENSIONAL PURPOSES ONLY TO PROVE CONCEPT & THE REQUIRED STORAGE VOLUME CAN BE ACHIEVED ON SITE.

MANNS WOODWARD STUDIOS
ARCHITECTURE + MASTER PLANNING
8098 SANDPIPER CIR, SUITE
NOTTINGHAM, MD 21236
☎ 410–344–1460
✉ INFO@MWSARCH.COM
WWW.MWSARCH.COM

CONSULTANT:
HRG
HERBERT, ROWLAND & GRUBIC, INC.
1275 GLENLIVET DRIVE
SUITE 145
ALLENTOWN, PA 18106
610.351.0311 | hrg–inc.com

SEAL:

COMMONWEALTH OF PENNSYLVANIA — REGISTERED PROFESSIONAL — DENNIS J REICHEL — ENGINEER NO. PE070767 — 10/01/2026

HRG
HERBERT, ROWLAND & GRUBIC, INC.
1275 GLENLIVET DRIVE
SUITE 145
ALLENTOWN, PA 18106
610.351.0311 | hrg–inc.com

PRELIMINARY / FINAL LAND DEVELOPMENT PLAN
FOR
EMERGENCY SERVICES FACILITY
EXETER TOWNSHIP
4975 DEMOSS ROAD
READING, PA 19606
EXETER TOWNSHIP, BERKS COUNTY, PENNSYLVANIA

PROFESSIONAL SEAL:

HRG PROJECT NUMBER: R006367.0427
PLAN DATE: 2026.02.18
DRAWING SCALE: AS SHOWN
PROJ. MANAGER: DENNIS REICHEL

REVISIONS

NO.	DATE	DESCRIPTION
1	2026.03.18	REV AS PER 3/16/26 PLANNING COMMISSION COMMENTS
2	2026.06.15	50% CONSTRUCTION PLAN
3	2026.08.21	90% CONSTRUCTION PLAN
4	2026.10.01	BID SET
5		
6		
7		
8		
9		

SHEET TITLE:
SITE DETAILS

SHEET: DT-11 | 25

EXETER TOWNSHIP
EMERGENCY SERVICES FACILITY
70 GIBRALTAR ROAD
READING, PA 19606

PROJECT NUMBER: 25–049

SUBMISSION: BID SET

ORIGINAL ISSUE DATE: 10/01/2026

SHEET REVISION SCHEDULE:
No. DATE

REFERENCE PLAN

SHEET NUMBER:
C25

ALL DRAWINGS ARE PROTECTED BY FEDERAL COPYRIGHT BY MANNS WOODWARD STUDIOS, INC. AND CAN NOT BE REPRODUCED OR MODIFIED IN ANY MANNER WITHOUT WRITTEN PERMISSION. DOCUMENTS MAY NOT BE USED IN PART OR WHOLE TO DEVELOP THE DESIGN OF ANOTHER BUILDING WITHOUT EXPRESS WRITTEN PERMISSION BY MANNS WOODWARD STUDIOS.

MC-3500 STORMTECH CHAMBER SPECIFICATIONS

1. CHAMBERS SHALL BE STORMTECH MC-3500.
2. CHAMBERS SHALL BE ARCH-SHAPED AND SHALL BE MANUFACTURED FROM VIRGIN, IMPACT-MODIFIED POLYPROPYLENE COPOLYMERS.
3. CHAMBERS SHALL MEET THE REQUIREMENTS OF ASTM F2418, "STANDARD SPECIFICATION FOR POLYPROPYLENE (PP) CORRUGATED WALL STORMWATER COLLECTION CHAMBERS" CHAMBER CLASSIFICATION 45x76 DESIGNATION SS.
4. CHAMBER ROWS SHALL PROVIDE CONTINUOUS, UNOBSTRUCTED INTERNAL SPACE WITH NO INTERNAL SUPPORTS THAT WOULD IMPEDE FLOW OR LIMIT ACCESS FOR INSPECTION.
5. THE STRUCTURAL DESIGN OF THE CHAMBERS, THE STRUCTURAL BACKFILL, AND THE INSTALLATION REQUIREMENTS SHALL ENSURE THAT THE LOAD FACTORS SPECIFIED IN THE AASHTO LRFD BRIDGE DESIGN SPECIFICATIONS, SECTION 12.12, ARE MET FOR: 1) LONG-DURATION DEAD LOADS AND 2) SHORT-DURATION LIVE LOADS, BASED ON THE AASHTO DESIGN TRUCK WITH CONSIDERATION FOR IMPACT AND MULTIPLE VEHICLE PRESENCES.
6. CHAMBERS SHALL BE DESIGNED, TESTED AND ALLOWABLE LOAD CONFIGURATIONS DETERMINED IN ACCORDANCE WITH ASTM F2787, "STANDARD PRACTICE FOR STRUCTURAL DESIGN OF THERMOPLASTIC CORRUGATED WALL STORMWATER COLLECTION CHAMBERS". LOAD CONFIGURATIONS SHALL INCLUDE: 1) INSTANTANEOUS (<1 MIN) AASHTO DESIGN TRUCK LIVE LOAD ON MINIMUM COVER 2) MAXIMUM PERMANENT (75-YR) COVER LOAD AND 3) ALLOWABLE COVER WITH PARKED (1-WEEK) AASHTO DESIGN TRUCK.
7. REQUIREMENTS FOR HANDLING AND INSTALLATION:
   - TO MAINTAIN THE WIDTH OF CHAMBERS DURING SHIPPING AND HANDLING, CHAMBERS SHALL HAVE INTEGRAL, INTERLOCKING STACKING LUGS.
   - TO ENSURE A SECURE JOINT DURING INSTALLATION AND BACKFILL, THE HEIGHT OF THE CHAMBER JOINT SHALL NOT BE LESS THAN 3".
   - TO ENSURE THE INTEGRITY OF THE ARCH SHAPE DURING INSTALLATION, a) THE ARCH STIFFNESS CONSTANT SHALL BE GREATER THAN OR EQUAL TO 500 LBS/FT/% (88 KN/M/%). THE ASC IS DEFINED IN SECTION 6.2.8 OF ASTM F2418, AND b) TO RESIST CHAMBER DEFORMATION DURING INSTALLATION AT ELEVATED TEMPERATURES (ABOVE 73° F / 23° C), CHAMBERS SHALL BE PRODUCED FROM REFLECTIVE GOLD OR YELLOW COLORS.
8. ONLY CHAMBERS THAT ARE APPROVED BY THE SITE DESIGN ENGINEER WILL BE ALLOWED. UPON REQUEST BY THE SITE DESIGN ENGINEER OR OWNER, THE CHAMBER MANUFACTURER SHALL SUBMIT A STRUCTURAL EVALUATION FOR APPROVAL BEFORE DELIVERING CHAMBERS TO THE PROJECT SITE AS FOLLOWS:
   - THE STRUCTURAL EVALUATION SHALL BE SEALED BY A REGISTERED PROFESSIONAL ENGINEER.
   - THE STRUCTURAL EVALUATION SHALL DEMONSTRATE THAT THE SAFETY FACTORS ARE GREATER THAN OR EQUAL TO 1.95 FOR DEAD LOAD AND 1.75 FOR LIVE LOAD, THE MINIMUM REQUIRED BY ASTM F2787 AND BY SECTIONS 3 AND 12.12 OF THE AASHTO LRFD BRIDGE DESIGN SPECIFICATIONS FOR THERMOPLASTIC PIPE.
   - THE TEST DERIVED CREEP MODULUS AS SPECIFIED IN ASTM F2418 SHALL BE USED FOR PERMANENT DEAD LOAD DESIGN EXCEPT THAT IT SHALL BE THE 75-YEAR MODULUS USED FOR DESIGN.
9. CHAMBERS AND END CAPS SHALL BE PRODUCED AT AN ISO 9001 CERTIFIED MANUFACTURING FACILITY.
10. MANIFOLD SIZE TO BE DETERMINED BY SITE DESIGN ENGINEER. SEE TECH NOTE #6.32 FOR MANIFOLD SIZING GUIDANCE. DUE TO THE ADAPTATION OF THIS CHAMBER SYSTEM TO SPECIFIC SITE AND DESIGN CONSTRAINTS, IT MAY BE NECESSARY TO CUT AND COUPLE ADDITIONAL PIPE TO STANDARD MANIFOLD COMPONENTS IN THE FIELD.
11. ADS DOES NOT DESIGN OR PROVIDE MEMBRANE LINER SYSTEMS. TO MINIMIZE THE LEAKAGE POTENTIAL OF LINER SYSTEMS, THE MEMBRANE LINER SYSTEM SHOULD BE DESIGNED BY A KNOWLEDGEABLE GEOTEXTILE PROFESSIONAL AND INSTALLED BY A QUALIFIED CONTRACTOR.

IMPORTANT - NOTES FOR THE BIDDING AND INSTALLATION OF MC-3500 CHAMBER SYSTEM

1. STORMTECH MC-3500 CHAMBERS SHALL NOT BE INSTALLED UNTIL THE MANUFACTURER'S REPRESENTATIVE HAS COMPLETED A PRE-CONSTRUCTION MEETING WITH THE INSTALLERS.
2. STORMTECH MC-3500 CHAMBERS SHALL BE INSTALLED IN ACCORDANCE WITH THE "MC-3500 & MC-4500 STORMTECH CHAMBER INSTALLATION GUIDE".
3. CHAMBERS ARE NOT TO BE BACKFILLED WITH A DOZER OR AN EXCAVATOR SITUATED OVER THE CHAMBERS. STORMTECH RECOMMENDS 3 BACKFILL METHODS:
   - STONE/SHOOTER LOCATED OFF THE CHAMBER BED.
   - BACKFILL AS ROWS ARE BUILT USING AN EXCAVATOR ON THE FOUNDATION STONE OR SUBGRADE.
   - BACKFILL FROM OUTSIDE THE EXCAVATION USING A LONG BOOM HOE OR EXCAVATOR.
4. THE FOUNDATION STONE SHALL BE LEVELED AND COMPACTED PRIOR TO PLACING CHAMBERS.
5. JOINTS BETWEEN CHAMBERS SHALL BE PROPERLY SEATED PRIOR TO PLACING STONE.
6. MAINTAIN MINIMUM - 6" (150 mm) SPACING BETWEEN THE CHAMBER ROWS.
7. INLET AND OUTLET MANIFOLDS MUST BE INSERTED A MINIMUM OF 12" (300 mm) INTO CHAMBER END CAPS.
8. EMBEDMENT STONE SURROUNDING CHAMBERS MUST BE A CLEAN, CRUSHED, ANGULAR STONE OR RECYCLED CONCRETE; AASHTO M43 #3, 357, 4, 467, 5, 56, OR 57.
9. STONE MUST BE PLACED ON THE TOP CENTER OF THE CHAMBER TO ANCHOR THE CHAMBERS IN PLACE AND PRESERVE ROW SPACING.
10. THE CONTRACTOR MUST REPORT ANY DISCREPANCIES WITH CHAMBER FOUNDATION MATERIALS BEARING CAPACITIES TO THE SITE DESIGN ENGINEER.
11. ADS RECOMMENDS THE USE OF "FLEXSTORM CATCH IT" INSERTS DURING CONSTRUCTION FOR ALL INLETS TO PROTECT THE SUBSURFACE STORMWATER MANAGEMENT SYSTEM FROM CONSTRUCTION SITE RUNOFF.

NOTES FOR CONSTRUCTION EQUIPMENT

1. STORMTECH MC-3500 CHAMBERS SHALL BE INSTALLED IN ACCORDANCE WITH THE "MC-3500 & MC-4500 STORMTECH CHAMBER INSTALLATION GUIDE".
2. THE USE OF EQUIPMENT OVER MC-3500 CHAMBERS IS LIMITED:
   - NO EQUIPMENT IS ALLOWED ON BARE CHAMBERS.
   - NO RUBBER TIRED LOADER, DUMP TRUCK, OR EXCAVATORS ARE ALLOWED UNTIL PROPER FILL DEPTHS ARE REACHED IN ACCORDANCE WITH THE "MC-3500 & MC-4500 STORMTECH CHAMBER INSTALLATION GUIDE".
   - WEIGHT LIMITS FOR CONSTRUCTION EQUIPMENT CAN BE FOUND IN THE "MC-3500 & MC-4500 STORMTECH CHAMBER INSTALLATION GUIDE".
3. FULL 36" (900 mm) OF STABILIZED COVER MATERIALS OVER THE CHAMBERS IS REQUIRED FOR DUMP TRUCK TRAVEL OR DUMPING.

USE OF A DOZER TO PUSH EMBEDMENT STONE BETWEEN THE ROWS OF CHAMBERS MAY CAUSE DAMAGE TO CHAMBERS AND IS NOT AN ACCEPTABLE BACKFILL METHOD. ANY CHAMBERS DAMAGED BY USING THE "DUMP AND PUSH" METHOD ARE NOT COVERED UNDER THE STORMTECH STANDARD WARRANTY.

CONTACT ADS WITH ANY QUESTIONS ON INSTALLATION REQUIREMENTS OR WEIGHT LIMITS FOR CONSTRUCTION EQUIPMENT.

MC-SERIES END CAP INSERTION DETAIL

NTS

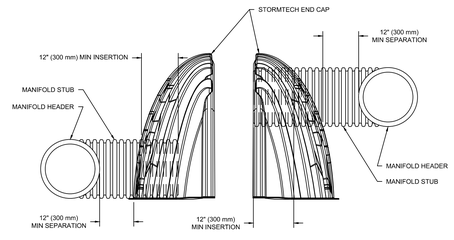

NOTE: MANIFOLD STUB MUST BE LAID HORIZONTAL FOR A PROPER FIT IN END CAP OPENING.

MC-3500 TECHNICAL SPECIFICATION

NTS

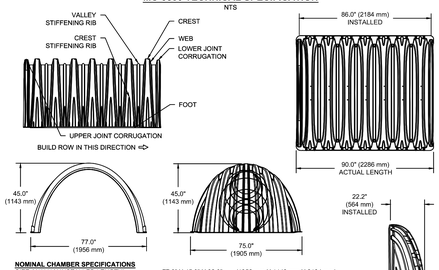

NOMINAL CHAMBER SPECIFICATIONS		
SIZE (W X H X INSTALLED LENGTH)	77.0" X 45.0" X 86.0"	(1956 mm X 1143 mm X 2184 mm)
CHAMBER STORAGE	106.9 CUBIC FEET	(3.11 m³)
MINIMUM INSTALLED STORAGE*	175.0 CUBIC FEET	(4.96 m³)
WEIGHT	134 lbs.	(60.8 kg)

NOMINAL END CAP SPECIFICATIONS		
SIZE (W X H X INSTALLED LENGTH)	75.0" X 45.0" X 22.2"	(1905 mm X 1143 mm X 564 mm)
END CAP STORAGE	14.9 CUBIC FEET	(0.42 m³)
MINIMUM INSTALLED STORAGE*	45.1 CUBIC FEET	(1.28 m³)
WEIGHT	49 lbs.	(22.2 kg)

*ASSUMES 12" (305 mm) STONE ABOVE, 9" (229 mm) STONE FOUNDATION, 6" SPACING BETWEEN CHAMBERS, 6" (152 mm) STONE PERIMETER IN FRONT OF END CAPS AND 40% STONE POROSITY

STUBS AT BOTTOM OF END CAP FOR PART NUMBERS ENDING WITH "B"
STUBS AT TOP OF END CAP FOR PART NUMBERS ENDING WITH "T"
END CAPS WITH A WELDED CROWN PLATE END WITH "C"
END CAPS WITH A PREFABRICATED WELDED STUB END WITH "W"

PART #	STUB	B	C
MC3500IEPP06T	6" (150 mm)	33.21" (844 mm)	---
MC3500IEPP06B		---	0.66" (17 mm)
MC3500IEPP08T	8" (200 mm)	31.16" (791 mm)	---
MC3500IEPP08B		---	0.81" (21 mm)
MC3500IEPP10T	10" (250 mm)	29.04" (738 mm)	---
MC3500IEPP10B		---	0.93" (24 mm)
MC3500IEPP12T	12" (300 mm)	26.36" (670 mm)	---
MC3500IEPP12B		---	1.35" (34 mm)
MC3500IEPP15T	15" (375 mm)	23.39" (594 mm)	---
MC3500IEPP15B		---	1.50" (38 mm)
MC3500IEPP18TC	18" (450 mm)	20.03" (509 mm)	---
MC3500IEPP18TW			
MC3500IEPP18BC		---	1.77" (45 mm)
MC3500IEPP18BW			
MC3500IEPP24TC	24" (600 mm)	14.48" (368 mm)	---
MC3500IEPP24TW			
MC3500IEPP24BC		---	2.06" (52 mm)
MC3500IEPP24BW			
MC3500IEPP30BC	30" (750 mm)	---	2.75" (70 mm)

NOTE: ALL DIMENSIONS ARE NOMINAL

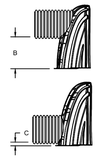

CUSTOM PRECORED INVERTS ARE AVAILABLE UPON REQUEST. INVENTORIED MANIFOLDS INCLUDE 12-24" (300-600 mm) SIZE ON SIZE AND 15-48" (375-1200 mm) ECCENTRIC MANIFOLDS. CUSTOM INVERT LOCATIONS ON THE MC-3500 END CAP CUT IN THE FIELD ARE NOT RECOMMENDED FOR PIPE SIZES GREATER THAN 10" (250 mm). THE INVERT LOCATION IN COLUMN 'B' ARE THE HIGHEST POSSIBLE FOR THE PIPE SIZE.

ACCEPTABLE FILL MATERIALS: STORMTECH MC-3500 CHAMBER SYSTEMS

	MATERIAL LOCATION	DESCRIPTION	AASHTO MATERIAL CLASSIFICATIONS	COMPACTION / DENSITY REQUIREMENT
D	**FINAL FILL:** FILL MATERIAL FOR LAYER 'D' STARTS FROM THE TOP OF THE 'C' LAYER TO THE BOTTOM OF FLEXIBLE PAVEMENT OR UNPAVED FINISHED GRADE ABOVE. NOTE THAT PAVEMENT SUBBASE MAY BE PART OF THE 'D' LAYER	ANY SOIL/ROCK MATERIALS, NATIVE SOILS, OR PER ENGINEER'S PLANS. CHECK PLANS FOR PAVEMENT SUBGRADE REQUIREMENTS.	N/A	PREPARE PER SITE DESIGN ENGINEER'S PLANS. PAVED INSTALLATIONS MAY HAVE STRINGENT MATERIAL AND PREPARATION REQUIREMENTS.
C	**INITIAL FILL:** FILL MATERIAL FOR LAYER 'C' STARTS FROM THE TOP OF THE EMBEDMENT STONE ('B' LAYER) TO 24" (600 mm) ABOVE THE TOP OF THE CHAMBER. NOTE THAT PAVEMENT SUBBASE MAY BE A PART OF THE 'C' LAYER.	GRANULAR WELL-GRADED SOIL/AGGREGATE MIXTURES, <35% FINES OR PROCESSED AGGREGATE. MOST PAVEMENT SUBBASE MATERIALS CAN BE USED IN LIEU OF THIS LAYER.	AASHTO M145[1] A-1, A-2-4, A-3 OR AASHTO M43[1] 3, 357, 4, 467, 5, 56, 57, 6, 67, 68, 7, 78, 8, 89, 9, 10	BEGIN COMPACTIONS AFTER 24" (600 mm) OF MATERIAL OVER THE CHAMBERS IS REACHED, COMPACT ADDITIONAL LAYERS IN 12" (300 mm) MAX LIFTS TO A MIN. 95% PROCTOR DENSITY FOR WELL GRADED MATERIAL AND 95% RELATIVE DENSITY FOR PROCESSED AGGREGATE MATERIALS.
B	**EMBEDMENT STONE:** FILL SURROUNDING THE CHAMBERS FROM THE FOUNDATION STONE ('A' LAYER) TO THE 'C' LAYER ABOVE.	CLEAN, CRUSHED, ANGULAR STONE OR RECYCLED CONCRETE[3]	AASHTO M43[1] 3, 357, 4, 467, 5, 56, 57	
A	**FOUNDATION STONE:** FILL BELOW CHAMBERS FROM THE SUBGRADE UP TO THE FOOT (BOTTOM) OF THE CHAMBER.	CLEAN, CRUSHED, ANGULAR STONE OR RECYCLED CONCRETE[3]	AASHTO M43[1] 3, 357, 4, 467, 5, 56, 57	PLATE COMPACT OR ROLL TO ACHIEVE A FLAT SURFACE.[2,3]

PLEASE NOTE:
1. THE LISTED AASHTO DESIGNATIONS ARE FOR GRADATIONS ONLY. THE STONE MUST ALSO BE CLEAN, CRUSHED, ANGULAR. FOR EXAMPLE, A SPECIFICATION FOR #4 STONE WOULD STATE: "CLEAN, CRUSHED, ANGULAR NO. 4 (AASHTO M43) STONE".
2. STORMTECH COMPACTION REQUIREMENTS ARE MET FOR 'A' LOCATION MATERIALS WHEN PLACED AND COMPACTED IN 9" (230 mm) (MAX) LIFTS USING TWO FULL COVERAGES WITH A VIBRATORY COMPACTOR.
3. WHERE INFILTRATION SURFACES MAY BE COMPROMISED BY COMPACTION, FOR STANDARD DESIGN LOAD CONDITIONS, A FLAT SURFACE MAY BE ACHIEVED BY RAKING OR DRAGGING WITHOUT COMPACTION EQUIPMENT. FOR SPECIAL LOAD DESIGNS, CONTACT STORMTECH FOR COMPACTION REQUIREMENTS.
4. ONCE LAYER 'C' IS PLACED, ANY SOIL/MATERIAL CAN BE PLACED IN LAYER 'D' UP TO THE FINISHED GRADE. MOST PAVEMENT SUBBASE SOILS CAN BE USED TO REPLACE THE MATERIAL REQUIREMENTS OF LAYER 'C' OR 'D' AT THE SITE DESIGN ENGINEER'S DISCRETION.
5. WHERE RECYCLED CONCRETE AGGREGATE IS USED IN LAYERS 'A' OR 'B' THE MATERIAL SHOULD ALSO MEET THE ACCEPTABILITY CRITERIA OUTLINED IN TECHNICAL NOTE 6.20 "RECYCLED CONCRETE STRUCTURAL BACKFILL".

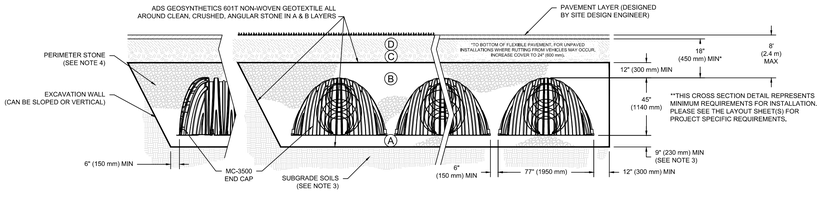

NOTES:

1. CHAMBERS SHALL MEET THE REQUIREMENTS OF ASTM F2418, "STANDARD SPECIFICATION FOR POLYPROPYLENE (PP) CORRUGATED WALL STORMWATER COLLECTION CHAMBERS" CHAMBER CLASSIFICATION 45x76 DESIGNATION SS.
2. MC-3500 CHAMBERS SHALL BE DESIGNED IN ACCORDANCE WITH ASTM F2787 "STANDARD PRACTICE FOR STRUCTURAL DESIGN OF THERMOPLASTIC CORRUGATED WALL STORMWATER COLLECTION CHAMBERS".
3. THE SITE DESIGN ENGINEER IS RESPONSIBLE FOR ASSESSING THE BEARING RESISTANCE (ALLOWABLE BEARING CAPACITY) OF THE SUBGRADE SOILS AND THE DEPTH OF FOUNDATION STONE WITH CONSIDERATION FOR THE RANGE OF EXPECTED SOIL MOISTURE CONDITIONS. REFERENCE STORMTECH DESIGN MANUAL FOR BEARING CAPACITY GUIDANCE.
4. PERIMETER STONE MUST BE EXTENDED HORIZONTALLY TO THE EXCAVATION WALL FOR BOTH VERTICAL AND SLOPED EXCAVATION WALLS.
5. REQUIREMENTS FOR HANDLING AND INSTALLATION:
   - TO MAINTAIN THE WIDTH OF CHAMBERS DURING SHIPPING AND HANDLING, CHAMBERS SHALL HAVE INTEGRAL, INTERLOCKING STACKING LUGS.
   - TO ENSURE A SECURE JOINT DURING INSTALLATION AND BACKFILL, THE HEIGHT OF THE CHAMBER JOINT SHALL NOT BE LESS THAN 3".
   - TO ENSURE THE INTEGRITY OF THE ARCH SHAPE DURING INSTALLATION, a) THE ARCH STIFFNESS CONSTANT SHALL BE GREATER THAN OR EQUAL TO 500 LBS/FT/% THE ASC IS DEFINED IN SECTION 6.2.8 OF ASTM F2418, AND b) TO RESIST CHAMBER DEFORMATION DURING INSTALLATION AT ELEVATED TEMPERATURES (ABOVE 73° F / 23° C), CHAMBERS SHALL BE PRODUCED FROM REFLECTIVE GOLD OR YELLOW COLORS.

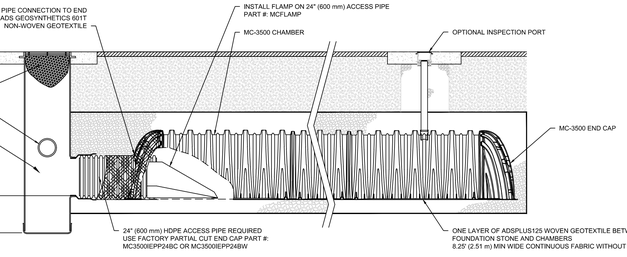

MC-3500 ISOLATOR ROW PLUS DETAIL

NTS

INSPECTION & MAINTENANCE

STEP 1) INSPECT ISOLATOR ROW PLUS FOR SEDIMENT
- A. INSPECTION PORTS (IF PRESENT)
  - A.1. REMOVE/OPEN LID ON NYLOPLAST INLINE DRAIN
  - A.2. REMOVE AND CLEAN FLEXSTORM FILTER IF INSTALLED
  - A.3. USING A FLASHLIGHT AND STADIA ROD, MEASURE DEPTH OF SEDIMENT AND RECORD ON MAINTENANCE LOG
  - A.4. LOWER A CAMERA INTO ISOLATOR ROW PLUS FOR VISUAL INSPECTION OF SEDIMENT LEVELS (OPTIONAL)
  - A.5. IF SEDIMENT IS AT, OR ABOVE, 3" (80 mm) PROCEED TO STEP 2. IF NOT, PROCEED TO STEP 3.
- B. ALL ISOLATOR PLUS ROWS
  - B.1. REMOVE COVER FROM STRUCTURE AT UPSTREAM END OF ISOLATOR ROW PLUS
  - B.2. USING A FLASHLIGHT, INSPECT DOWN THE ISOLATOR ROW PLUS THROUGH OUTLET PIPE
    - i) MIRRORS ON POLES OR CAMERAS MAY BE USED TO AVOID A CONFINED SPACE ENTRY
    - ii) FOLLOW OSHA REGULATIONS FOR CONFINED SPACE ENTRY IF ENTERING MANHOLE
  - B.3. IF SEDIMENT IS AT, OR ABOVE, 3" (80 mm) PROCEED TO STEP 2. IF NOT, PROCEED TO STEP 3.

STEP 2) CLEAN OUT ISOLATOR ROW PLUS USING THE JETVAC PROCESS
- A. A FIXED CULVERT CLEANING NOZZLE WITH REAR FACING SPREAD OF 45° (1.1 m) OR MORE IS PREFERRED
- B. APPLY MULTIPLE PASSES OF JETVAC UNTIL BACKFLUSH WATER IS CLEAN
- C. VACUUM STRUCTURE SUMP AS REQUIRED

STEP 3) REPLACE ALL COVERS, GRATES, FILTERS, AND LIDS; RECORD OBSERVATIONS AND ACTIONS.

STEP 4) INSPECT AND CLEAN BASINS AND MANHOLES UPSTREAM OF THE STORMTECH SYSTEM.

NOTES

1. INSPECT EVERY 6 MONTHS DURING THE FIRST YEAR OF OPERATION. ADJUST THE INSPECTION INTERVAL BASED ON PREVIOUS OBSERVATIONS OF SEDIMENT ACCUMULATION AND HIGH WATER ELEVATIONS.
2. CONDUCT JETTING AND VACTORING ANNUALLY OR WHEN INSPECTION SHOWS THAT MAINTENANCE IS NECESSARY.

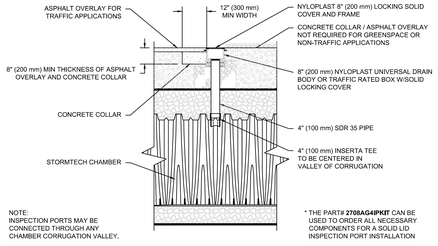

NOTE:
INSPECTION PORTS MAY BE CONNECTED THROUGH ANY CHAMBER CORRUGATION VALLEY.

* THE PART# **2708AG4IPKIT** CAN BE USED TO ORDER ALL NECESSARY COMPONENTS FOR A SOLID LID INSPECTION PORT INSTALLATION

4" (100 mm) PVC INSPECTION PORT DETAIL (MC SERIES CHAMBER)

NTS

ALL DRAWINGS ARE PROTECTED BY FEDERAL COPYRIGHT BY MANNS WOODWARD STUDIOS, INC. AND CAN NOT BE REPRODUCED OR MODIFIED IN ANY MANNER WITHOUT WRITTEN PERMISSION. DOCUMENTS MAY NOT BE USED IN PART OR WHOLE TO DEVELOP THE DESIGN OF ANOTHER BUILDING WITHOUT EXPRESS WRITTEN PERMISSION BY MANNS WOODWARD STUDIOS.

HERBERT, ROWLAND & GRUBIC, INC.
1275 GLENLIVET DRIVE
SUITE 145
ALLENTOWN, PA 18106
610.351.0311 | hrg-inc.com

PRELIMINARY / FINAL LAND DEVELOPMENT PLAN
FOR
EMERGENCY SERVICES FACILITY
EXETER TOWNSHIP
4975 DEMOSS ROAD
READING, PA 19606
EXETER TOWNSHIP, BERKS COUNTY, PENNSYLVANIA

PROFESSIONAL SEAL:

HRG PROJECT NUMBER: R006367.0427
PLAN DATE: 2026.02.18
DRAWING SCALE: AS SHOWN
PROJ. MANAGER: DENNIS REICHEL

REVISIONS

NO.	DATE	DESCRIPTION
1	2026.03.18	REV. AS. PER 3/16/26 PLANNING COMMISSION COMMENTS
2	2026.06.15	SUDE CONSTRUCTION PLAN
3	2026.08.21	SUDE CONSTRUCTION PLAN
4	2026.10.01	BID SET
5		
6		
7		
8		

SHEET TITLE:
SITE DETAILS

SHEET: DT-12 | 26

MANNS WOODWARD STUDIOS
ARCHITECTURE + MASTER PLANNING
8098 SANDPIPER CIR, SUITE
NOTTINGHAM, MD 21236
☎ 410-344-1460
✉ INFO@MWSARCH.COM
WWW.MWSARCH.COM

CONSULTANT:

HERBERT, ROWLAND & GRUBIC, INC.
1275 GLENLIVET DRIVE
SUITE 145
ALLENTOWN, PA 18106
610.351.0311 | hrg-inc.com

SEAL:

COMMONWEALTH OF PENNSYLVANIA
REGISTERED PROFESSIONAL
DENNIS J. REICHEL
ENGINEER NO. PE070767
30 JUNE 2026

PROJECT NUMBER: 25-049

SUBMISSION: BID SET

ORIGINAL ISSUE DATE: 10/01/2026

SHEET REVISION SCHEDULE:
No. DATE

REFERENCE PLAN

SHEET NUMBER: C26

EXETER TOWNSHIP
EMERGENCY SERVICES FACILITY
70 GIBRALTAR ROAD
READING, PA 19606

FILE PATH & NAME: C:\MWS\BIM\DT_ACAD\EXETER TOWNSHIP\DT-12 SITE DETAILS.DWG 10.01.25 AM 8:53:47 USER: KATIE.BLOOM

EROSION & SEDIMENT CONTROL PLAN

FOR

EXETER TOWNSHIP - EMERGENCY SERVICES CENTER

EXETER TOWNSHIP, BERKS COUNTY, PENNSYLVANIA

APRIL 01, 2026

GENERAL EROSION AND SEDIMENT CONTROL NOTES

1. ALL EARTH DISTURBANCES, INCLUDING CLEARING AND GRUBBING AS WELL AS CUTS AND FILLS SHALL BE DONE IN ACCORDANCE WITH THE APPROVED E&S PLAN. A COPY OF THE APPROVED EROSION AND SEDIMENT CONTROL DRAWINGS (STAMPED, SIGNED AND DATED BY THE BERKS COUNTY CONSERVATION DISTRICT) MUST BE AVAILABLE AT THE PROJECT SITE AT ALL TIMES. THE BERKS COUNTY CONSERVATION DISTRICT SHALL BE NOTIFIED OF ANY CHANGES TO THE APPROVED PLAN PRIOR TO IMPLEMENTATION OF THOSE CHANGES. THE DISTRICT MAY REQUIRE A WRITTEN SUBMITTAL OF THOSE CHANGES FOR REVIEW AND APPROVAL AT ITS DISCRETION.
2. AT NO TIME SHALL CONSTRUCTION VEHICLES BE ALLOWED TO ENTER AREAS OUTSIDE THE LIMIT OF DISTURBANCE BOUNDARIES SHOWN ON THE PLAN MAPS. THESE AREAS MUST BE CLEARLY MARKED AND FENCED OFF BEFORE CLEARING AND GRUBBING OPERATIONS BEGIN.
3. VEHICLES AND EQUIPMENT MAY ONLY ENTER AND EXIT THE CONSTRUCTION SITE VIA A STABILIZED ROCK CONSTRUCTION ENTRANCE.
4. EROSION AND SEDIMENT BMP'S MUST BE CONSTRUCTED, STABILIZED, AND FUNCTIONAL BEFORE SITE DISTURBANCE BEGINS WITHIN THE TRIBUTARY AREAS OF THOSE BMP'S. E&S BMP'S SHALL REMAIN FUNCTIONAL AS SUCH UNTIL ALL AREAS TRIBUTARY TO THEM ARE PERMANENTLY STABILIZED OR UNTIL THEY ARE REPLACED BY ANOTHER BMP APPROVED BY THE LOCAL CONSERVATION DISTRICT OR THE DEPARTMENT.
5. ALL EARTH DISTURBANCES, INCLUDING CLEARING AND GRUBBING AS WELL AS CUTS AND FILLS SHALL BE DONE IN ACCORDANCE WITH THE APPROVED E&S PLAN. A COPY OF THE APPROVED EROSION AND SEDIMENT CONTROL PLANS (STAMPED, SIGNED AND DATED BY THE REVIEWING AGENCY) MUST BE AVAILABLE AT THE PROJECT SITE AT ALL TIMES. THE BERKS COUNTY CONSERVATION DISTRICT SHALL BE NOTIFIED OF ANY CHANGES TO THE APPROVED PLAN PRIOR TO IMPLEMENTATION OF THOSE CHANGES. THE DISTRICT MAY REQUIRE A WRITTEN SUBMITTAL OF THOSE CHANGES FOR REVIEW AND APPROVAL AT ITS DISCRETION.
6. IMMEDIATELY UPON DISCOVERING UNFORESEEN CIRCUMSTANCES POSING THE POTENTIAL FOR ACCELERATED EROSION AND/OR SEDIMENT POLLUTION, THE OPERATOR SHALL IMPLEMENT APPROPRIATE BEST MANAGEMENT PRACTICES TO MINIMIZE THE POTENTIAL FOR ACCELERATED EROSION AND/OR SEDIMENT POLLUTION AND NOTIFY THE BERKS COUNTY CONSERVATION DISTRICT AND/OR REGIONAL OFFICE OF THE DEPARTMENT.
7. ALL PUMPING OF SEDIMENT LADEN WATER FROM ANY WORK AREA SHALL BE DONE ACCORDING TO THE PROCEDURE DESCRIBED IN THIS PLAN, OVER UNDISTURBED VEGETATED AREAS. ALL PUMPING OF SEDIMENT LADEN WATER SHALL BE THROUGH A SEDIMENT CONTROL BMP, SUCH AS A PUMPED WATER FILTER BAG DISCHARGING OVER NON-DISTURBED AREAS.
8. FAILURE TO CORRECTLY INSTALL E&S BMPS, FAILURE TO PREVENT SEDIMENT-LADEN RUNOFF FROM LEAVING THE CONSTRUCTION SITE, OR FAILURE TO TAKE IMMEDIATE CORRECTIVE ACTION TO RESOLVE FAILURE OF E&S BMPS MAY RESULT IN ADMINISTRATIVE, CIVIL, AND/OR CRIMINAL PENALTIES BEING INSTITUTED BY THE DEPARTMENT AS DEFINED IN SECTION 602 OF THE PENNSYLVANIA CLEAN STREAMS LAW. THE CLEAN STREAMS LAW PROVIDES FOR UP TO $10,000 PER DAY IN CIVIL PENALTIES, UP TO $10,000 IN SUMMARY CRIMINAL PENALTIES, AND UP TO $25,000 IN MISDEMEANOR CRIMINAL PENALTIES FOR EACH VIOLATION.
9. THE CONTRACTOR WILL BE RESPONSIBLE FOR THE REMOVAL OF ANY EXCESS MATERIAL AND MAKE SURE THE SITE(S) RECEIVING THE EXCESS HAS AN APPROVED AND FULLY IMPLEMENTED EROSION AND SEDIMENT CONTROL PLAN THAT MEETS THE CONDITIONS OF CHAPTER 102 AND/OR OTHER STATE OR FEDERAL REGULATIONS.
10. CLEAN FILL IS DEFINED AS: UNCONTAMINATED, NON-WATER SOLUBLE, NON-DECOMPOSABLE, INERT, SOLID MATERIAL. THE TERM INCLUDES SOIL, ROCK, STONE, DREDGED MATERIAL, USED ASPHALT, AND BRICK, BLOCK OR CONCRETE FROM CONSTRUCTION AND DEMOLITION ACTIVITIES THAT IS SEPARATE FROM OTHER WASTE AND IS RECOGNIZABLE AS SUCH. THE TERM DOES NOT INCLUDE MATERIALS PLACED IN OR ON THE WATERS OF THE COMMONWEALTH UNLESS OTHERWISE AUTHORIZED. (THE TERM 'USED ASPHALT' DOES NOT INCLUDE MILLED ASPHALT OR ASPHALT THAT HAS BEEN PROCESSED FOR RE-USE.).
11. THE CONTRACTOR IS RESPONSIBLE FOR ENSURING THAT ANY MATERIAL BROUGHT ON SITE IS CLEAN FILL. ANY PLACEMENT OF CLEAN FILL THAT HAS BEEN AFFECTED BY A SPILL OR RELEASE OF A REGULATED SUBSTANCE MUST USE FORM FP-001 TO CERTIFY THE ORIGIN OF THE FILL MATERIAL AND THE RESULTS OF THE ANALYTICAL TESTING TO QUALIFY THE MATERIAL AS CLEAN FILL. FORM FP-001 MUST BE RETAINED BY THE OWNER OF THE PROPERTY RECEIVING THE FILL.
12. ENVIRONMENTAL DUE DILIGENCE MUST BE PERFORMED TO DETERMINE IF THE FILL MATERIALS ASSOCIATED WITH THEM A PROJECT QUALIFY AS CLEAN FILL. ENVIRONMENTAL DUE DILIGENCE IS DEFINED AS: INVESTIGATIVE TECHNIQUES, INCLUDING, BUT NOT LIMITED TO, VISUAL PROPERTY INSPECTIONS, ELECTRONIC DATA BASE SEAROHES, REVIEW OF PROPERTY OWNERSHIP, REVIEW OF PROPERTY USE HISTORY, SANBORN MAPS, ENVIRONMENTAL QUESTIONNAIRES, TRANSACTION SCREENS, ANALYTICAL TESTING, ENVIRONMENTAL ASSESSMENTS OR AUDITS. ANALYTICAL TESTING IS NOT A REQUIRED PART OF DUE DILIGENCE UNLESS VISUAL INSPECTION AND/OR REVIEW OF THE PAST LAND USE OF THE PROPERTY INDICATES THAT THE FILL MAY HAVE BEEN SUBJECTED TO A SPILL OR RELEASE OF A REGULATED SUBSTANCE. IF THE FILL MAY HAVE BEEN AFFECTED BY A SPILL OR RELEASE OF A REGULATED SUBSTANCE, IT MUST BE TESTED TO DETERMINE IF IT QUALIFIES AS CLEAN FILL. TESTING SHOULD BE PERFORMED IN ACCORDANCE WITH APPENDIX A OF THE DEPARTMENT'S POLICY 'MANAGEMENT OF CLEAN FILL.'
13. THE OPERATOR SHALL ASSURE THAT THE APPROVED EROSION AND SEDIMENT CONTROL PLAN IS PROPERLY AND COMPLETELY IMPLEMENTED.
14. THE CONTRACTOR IS ADVISED TO BECOME THOROUGHLY FAMILIAR WITH THE PROVISIONS OF THE APPENDIX 64, EROSION CONTROL RULES AND REGULATIONS, TITLE 25, PART 1, DEPARTMENT OF ENVIRONMENTAL PROTECTION, SUBPART C, PROTECTION OF NATURAL RESOURCES, ARTICLE III, WATER RESOURCES, CHAPTER 102, EROSION CONTROL.
15. CONCRETE WASH WATER SHALL BE HANDLED IN THE MANNER DESCRIBED ON THE PLAN DRAWINGS. IN NO CASE SHALL IT BE ALLOWED TO ENTER ANY SURFACE WATERS OR GROUNDWATER SYSTEMS.
16. ANY PLACEMENT OF CLEAN FILL THAT HAS BEEN AFFECTED BY A SPILL OR RELEASE OF A REGULATED SUBSTANCE MUST USE FORM FP-001 TO CERTIFY THE ORIGIN OF THE FILL MATERIAL AND THE RESULTS OF THE ANALYTICAL TESTING TO QUALIFY THE MATERIAL AS CLEAN FILL. FORM FP-001 MUST BE RETAINED BY THE OWNER OF THE PROPERTY RECEIVING THE FILL.

STABILIZATION SPECIFICATIONS

1. UPON TEMPORARY CESSATION OF AN EARTH DISTURBANCE ACTIVITY, THE SITE SHALL BE IMMEDIATELY SEEDED, MULCHED, OR OTHERWISE PROTECTED FROM ACCELERATED EROSION AND SEDIMENTATION PENDING FUTURE EARTH DISTURBANCE ACTIVITIES.
2. PERMANENT STABILIZATION IS DEFINED AS A MINIMUM UNIFORM 70% PERENNIAL VEGETATIVE COVER OR OTHER PERMANENT NON-VEGETATIVE COVER WITH A DENSITY SUFFICIENT TO RESIST ACCELERATED SURFACE EROSION AND SUBSURFACE CHARACTERISTICS SUFFICIENT TO RESIST SLIDING AND OTHER MOVEMENTS. CUT AND FILL SLOPES SHALL BE CAPABLE OF RESISTING FAILURE DUE TO SLUMPING, SLIDING OR OTHER MOVEMENTS.
3. TOPSOIL REQUIRED FOR THE ESTABLISHMENT OF VEGETATION SHALL BE STOCKPILED AT THE LOCATION(S) SHOWN ON THE PLAN DRAWINGS IN THE AMOUNT NECESSARY TO COMPLETE THE FINISH GRADING OF ALL EXPOSED AREAS THAT ARE TO BE STABILIZED BY VEGETATION. EACH STOCKPILE SHALL BE PROTECTED IN THE MANNER SHOWN ON THE PLAN DRAWINGS. TOPSOIL STOCKPILE HEIGHTS SHALL NOT EXCEED 35 FEET. STOCKPILE SIDE SLOPES MUST BE 2:1 OR FLATTER.
4. AREAS WHICH ARE TO BE TOPSOILED SHALL BE SCARIFIED TO A MINIMUM DEPTH OF 3 TO 5 INCHES – 6 TO 12 INCHES ON COMPACTED SOILS – PRIOR TO PLACEMENT OF TOPSOIL. AREAS TO BE VEGETATED SHALL HAVE A MINIMUM 4 INCHES OF TOPSOIL IN PLACE PRIOR TO SEEDING AND MULCHING. FILL OUTSLOPES SHALL HAVE A MINIMUM OF 2 INCHES OF TOPSOIL.
5. TOPSOIL SHOULD NOT BE PLACED WHILE THE TOPSOIL OR SUBSOIL IS IN A FROZEN OR MUDDY CONDITION, WHEN THE SUBSOIL IS EXCESSIVELY WET, OR IN A CONDITION THAT MAY OTHERWISE BE DETRIMENTAL TO PROPER GRADING AND SEEDBED PREPARATION. COMPACTED SOILS SHOULD BE SCARIFIED 6 TO 12 INCHES ALONG CONTOUR WHENEVER POSSIBLE PRIOR TO SEEDING.
6. IMMEDIATELY AFTER EARTH DISTURBANCE ACTIVITIES CEASE, THE OPERATOR SHALL STABILIZE THE DISTURBED AREAS. DURING NON-GERMINATING PERIODS, MULCH MUST BE APPLIED AT THE SPECIFIED RATES. DISTURBED AREAS WHICH ARE NOT AT FINISHED GRADE AND WHICH WILL BE RE-DISTURBED WITHIN 1 YEAR MUST BE STABILIZED IN ACCORDANCE WITH THE TEMPORARY VEGETATIVE STABILIZATION SPECIFICATIONS. DISTURBED AREAS WHICH ARE AT FINAL GRADE OR WHICH WILL NOT BE RE-DISTURBED WITHIN 1 YEAR MUST BE STABILIZED IN ACCORDANCE WITH THE PERMANENT VEGETATIVE STABILIZATION SPECIFICATIONS.
7. AN EROSION CONTROL BLANKET SHALL BE INSTALLED ON ALL DISTURBED SLOPES STEEPER THAN 3:1, ALL AREAS OF CONCENTRATED FLOWS, DISTURBED AREAS WITHIN 50' OF A SURFACE WATER AND ALL OTHER DISTURBED AREAS AS SPECIFIED ON THE PLAN MAPS AND/OR DETAIL SHEETS.
8. FILL MATERIAL FOR EMBANKMENTS SHALL BE FREE OF ROOTS, OR OTHER WOODY VEGETATION, ORGANIC MATERIAL, LARGE STONES, AND OTHER OBJECTIONABLE MATERIALS. THE EMBANKMENT SHALL BE COMPACTED IN MAXIMUM 8" LAYERED LIFTS AT 95% DENSITY.
9. STRAW MULCH SHALL BE APPLIED IN LONG STANDS, NOT CHOPPED OR FINELY BROKEN.
10. ALL GRADED AREAS SHALL BE PERMANENTLY STABILIZED IMMEDIATELY UPON REACHING FINISHED GRADE. CUT SLOPES IN COMPETENT BEDROCK AND ROCK FILLS NEED NOT BE VEGETATED. SEEDED AREAS WITHIN 50 FEET OF A SURFACE WATER, OR AS OTHERWISE SHOWN ON THE PLAN DRAWINGS, SHALL BE BLANKETED ACCORDING TO THE STANDARDS OF THIS PLAN.
11. STOCKPILES, BORROW AREAS AND SPOIL AREAS SHOULD BE SHOWN ON THE PLAN MAPS AND SHOULD BE SUBJECT TO THE PROVISIONS OF THESE STANDARDS AS WELL AS THOSE OF THE APPROVED E&S PLAN. ALL APPROPRIATE PERMITS/AUTHORIZATION SHOULD BE OBTAINED PRIOR TO EARTH DISTURBANCE ACTIVITIES WITHIN THESE AREAS.
12. WHEREVER POSSIBLE, FILLS SHOULD NOT BE CONSTRUCTED FROM OR BUILT UPON SOILS KNOWN TO HAVE LOW SHEAR STRENGTH OR THAT HAVE BEEN IDENTIFIED AS "LANDSLIDE PRONE" UNLESS IT CAN BE SHOWN THAT IT CAN BE DONE WITH AN ACCEPTABLE SAFETY FACTOR.
13. WHEREVER FILLS ARE TO BE CONSTRUCTED OUT OF OR ONTO SOILS IDENTIFIED AS HAVING LOW SHEAR STRENGTH OR ARE "LANDSLIDE PRONE," A REPORT SHOULD BE PREPARED BY A PROFESSIONAL GEOTECHNICAL ENGINEER OR PROFESSIONAL GEOLOGIST WHICH ADDRESSES THE FOLLOWING:
    - THE CHARACTER OF THE BEDROCK AND ANY ADVERSE GEOLOGIC CONDITION IN THE AREA OF THE FILLS INCLUDING PREVIOUS SLOPE FAILURES.
    - A SURVEY OF ALL SPRINGS, SEEPS, AND GROUNDWATER FLOW OBSERVED OR ANTICIPATED DURING WET PERIODS IN THE AREAS OF THE FILLS.
    - THE MAXIMUM STEEPNESS OF SLOPE AND HEIGHT OF FILL TO BE CONSTRUCTED ON THE SITE.
    - A STABILITY ANALYSIS INCLUDING, BUT NOT LIMITED TO, STRENGTH PARAMETERS, PORE PRESSURES, AND LONG-TERM SEEPAGE CONDITIONS. THESE DATA SHOULD BE ACCOMPANIED BY A DESCRIPTION OF ALL ENGINEERING DESIGN ASSUMPTIONS AND CALCULATIONS AS WELL AS THE ALTERNATIVES CONSIDERED IN SELECTING THE DESIGN SPECIFICATIONS AND TESTING METHODS.
    - THE ESTIMATED FACTOR OF SAFETY USED TO DESIGN THE SLOPES. AT A MINIMUM, THE LONG-TERM SAFETY FACTOR SHOULD BE 1.5 FOR CUTS OR FILLS WITHIN 50 FEET OF PUBLIC HIGHWAYS, RAILROADS, SURFACE WATERS, OR WHERE FAILURE COULD ENDANGER PUBLIC SAFETY. THE SAFETY FACTOR SHOULD BE A MINIMUM OF 1.25 FOR ALL OTHER FILLS.
14. TO AVOID ENDANGERING REGULATED WATERS OR PUBLIC TRANSPORTATION FACILITIES, A MINIMUM SETBACK SHOULD BE MAINTAINED ACCORDING TO TABLE 16.1 IN THE E&S MANUAL.

E&S PLANNING AND DESIGN

THIS PLAN WAS DESIGNED TO MAXIMIZE THE PROTECTION OF EXISTING DRAINAGE FEATURES AND EXISTING VEGETATION, MINIMIZE SOIL COMPACTION, LIMIT THE EXTENT AND DURATION OF EARTH DISTURBANCE AND MINIMIZE THE INCREASED STORMWATER RUNOFF DURING CONSTRUCTION.

THE SEQUENCE OF CONSTRUCTION LIMITS THE EXTENT AND DURATION OF GRADING TO ONLY THOSE AREAS NECESSARY TO CONSTRUCT THE PROPOSED IMPROVEMENTS. THE REMAINDER OF THE AREA WITHIN THE NPDES BOUNDARY AND OUTSIDE OF THE LIMIT OF DISTURBANCE WILL REMAIN UNDISTURBED WITH EXISTING VEGETATION.

THE DISTURBED AREAS WILL BE STABILIZED IMMEDIATELY WITH TEMPORARY SEEDING AND MULCHING. THE SEQUENCE OF CONSTRUCTION WAS DEVELOPED TO LIMIT THE DURATION OF EARTH DISTURBANCE ACTIVITIES.

STORMWATER RUNOFF DURING CONSTRUCTION WILL BE MANAGED THROUGH A SEDIMENT BASIN WHICH WILL BE CONVERTED TO A PERMANENT STORMWATER MANAGEMENT FACILITY. THE FACILITY WAS DESIGNED IN ACCORDANCE WITH THE EROSION & SEDIMENT POLLUTION CONTROL MANUAL TO MINIMIZE THE INCREASE IN STORMWATER RUNOFF DURING CONSTRUCTION BY SLOWLY RELEASING THE WATER THROUGH A SKIMMER. RUNOFF WILL ALSO BE MANAGED THROUGH FILTER SOCKS.

OWNERSHIP AND MAINTENANCE OF STORMATER AND E&S CONTROL FACILITIES

THE OWNER, EXETER TOWNSHIP, WILL BE RESPONSIBLE FOR THE MAINTENANCE OF ALL PERMANENT STORMWATER AND EROSION AND SEDIMENTATION CONTROL FACILITIES WHICH WILL BE CONSTRUCTED AS PART OF THIS PROJECT EXCEPT FOR THOSE WITHIN THE PUBLIC RIGHT-OF-WAY. DURING CONSTRUCTION, HOWEVER, IT SHALL BE THE CONTRACTOR'S RESPONSIBILITY TO PERFORM SITE MAINTENANCE IN ORDER TO ASSURE PROPER CONTROL AND OPERATION OF THE SOIL EROSION AND SEDIMENTATION CONTROL/STORMWATER DRAINAGE FACILITIES. THE FOLLOWING GENERAL DUTIES SHALL BE PERFORMED BY THE CONTRACTOR:

1. STAKE(S) SHALL BE PLACED IN THE SEDIMENT BASIN WITH CLEAN-OUT ELEVATIONS CLEARLY LABELED. SEDIMENT WITHIN THE BASIN SHALL BE CLEANED OUT WHEN IT REACHES THIS ELEVATION.
2. ANY DEBRIS ACCUMULATED AT SILT BARRIERS SHALL BE REMOVED AND PROPERLY DISPOSED. BARRIERS SHALL BE CHECKED AND REALIGNED OR RESET AS REQUIRED.
3. VEGETATIVE STABILIZATION SHALL BE PERIODICALLY INSPECTED FOR PROPER GROWTH. ANY AREAS NOT RESPONDING SHALL BE PROMPTLY RESEEDED. AREAS WHICH SHOW SIGNS OF EROSION PRIOR TO STABILIZATION SHALL BE GRADED, RESEEDED, AND RE-MULCHED AS SOON AS POSSIBLE.
4. THE STABILIZED CONSTRUCTION ENTRANCE SHALL BE CLEANED AND REDRESSED WHEN VOIDS BECOME CHOKED WITH MUD AND SEDIMENT.
5. MISCELLANEOUS ADDITIONS, ADJUSTMENTS OR CORRECTIONS SHALL BE MADE TO ANY EROSION CONTROL STRUCTURE AS DEEMED NECESSARY BY THE ENGINEER, COUNTY, OR TOWNSHIP REPRESENTATIVE IN ORDER TO CORRECT UNFORESEEN PROBLEMS OR PROBLEMS CAUSED BY STORMS PRIOR TO STABILIZATION.
6. ALL TEMPORARY MEASURES SHALL BE REMOVED FROM THE SITE AND THE AREA SHALL BE PERMANENTLY STABILIZED.
7. SOIL EROSION AND SEDIMENTATION CONTROL PLANS FOR OFFSITE DISPOSAL AND BORROW AREAS MUST HAVE AN E&S PLAN APPROVED BY THE NORTHAMPTON COUNTY CONSERVATION DISTRICT OR THE DEPARTMENT FULLY IMPLEMENTED PRIOR TO BEING ACTIVATED.
8. UNTIL THE SITE IS STABILIZED, ALL EROSION AND SEDIMENT CONTROL BMPS MUST BE MAINTAINED PROPERLY. MAINTENANCE MUST INCLUDE INSPECTIONS OF ALL EROSION AND SEDIMENT CONTROL BMPS AFTER EACH RUNOFF EVENT AND ON A WEEKLY BASIS. THE OPERATOR WILL MAINTAIN AND MAKE AVAILABLE TO THE WAYNE COUNTY CONSERVATION DISTRICT COMPLETE, WRITTEN INSPECTION LOGS OF ALL THOSE INSPECTIONS. ALL PREVENTATIVE AND REMEDIAL MAINTENANCE WORK, INCLUDING CLEANOUT, REPAIR, REPLACEMENT, RE-GRADING, RESEEDING, RE-MULCHING AND RE-NETTING MUST BE PERFORMED IMMEDIATELY. IF EROSION AND SEDIMENT CONTROL BMP'S FAIL TO PERFORM AS EXPECTED, REPLACEMENT BMP'S OR MODIFICATIONS OF THOSE INSTALLED WILL BE REQUIRED.
9. ANY SEDIMENT REMOVED FROM BMP'S DURING CONSTRUCTION WILL BE RETURNED TO UPLAND AREAS ON SITE AND INCORPORATED INTO THE SITE GRADING.
10. SEDIMENT TRACKED ONTO ANY PUBLIC ROADWAY OR SIDEWALK SHALL BE RETURNED TO THE CONSTRUCTION SITE BY THE END OF EACH WORK DAY AND DISPOSED IN THE MANNER DESCRIBED IN THIS PLAN. IN NO CASE SHALL THE SEDIMENT BE WASHED, SHOVELED, OR SWEPT INTO ANY ROADSIDE DITCH, STORM SEWER, OR SURFACE WATER.
11. ALL SEDIMENT REMOVED FROM BMP'S SHALL BE DISPOSED OF IN THE MANNER DESCRIBED ON THE PLAN DRAWINGS. SEDIMENT REMOVED FROM BMP'S SHALL BE DISPOSED OF IN LANDSCAPED AREAS OUTSIDE OF STEEP SLOPES, WETLANDS, FLOODPLAINS OR DRAINAGE SWALES AND IMMEDIATELY STABILIZED, OR PLACED IN TOPSOIL STOCKPILES.
12. A LOG SHOWING THE DATES THAT E&S BMP'S WERE INSPECTED AS WELL AS ANY DEFICIENCIES FOUND AND THE DATE THAT THEY WERE CORRECTED SHALL BE MAINTAINED ON THE SITE AND BE MADE AVAILABLE TO THE NORTHAMPTON COUNTY CONSERVATION DISTRICT OR OTHER REGULATORY AGENCY OFFICIALS AT THE TIME OF INSPECTION.
13. CONTRACTOR TO REPAIR OR REPLACE ALL FAILING BMP'S AS NECESSARY PER THE DETAILS AND SPECIFICATIONS LISTED ON THESE PLANS. CONTACT NORTHAMPTON COUNTY CONSERVATION DISTRICT IMMEDIATELY UPON DISCOVERING UNFORESEEN CIRCUMSTANCES POSING THE POTENTIAL TO CAUSE ACCELERATED EROSION OR SEDIMENT POLLUTION.
14. ALL CONCRETE WASHOUT FACILITIES SHALL BE INSPECTED DAILY. DAMAGED OR LEAKING WASHOUTS SHOULD BE DEACTIVATED AND REPAIRED OR REPLACED IMMEDIATELY. ACCUMULATED MATERIALS SHOULD BE REMOVED WHEN THEY REACH 75% CAPACITY. PLASTIC LINERS SHOULD BE REPLACED WITH EACH CLEANING OF THE WASHOUT FACILITY.

HANDLING OF MATERIALS WITH POTENTIAL TO CAUSE POLLUTION

1. ALL BUILDING MATERIALS AND WASTES MUST BE REMOVED FROM THE SITE AND RECYCLED AND DISPOSED OF IN ACCORDANCE WITH THE DEPARTMENT'S SOLID WASTE MANAGEMENT REGULATIONS AT 25 PA. CODE 260.1 ET SEQ., 271.1, AND 287.1 ET SEQ. NO BUILDING MATERIALS OR WASTE OR UNUSED BUILDING MATERIALS SHALL BE BURNED, BURIED, DUMPED, OR DISCHARGED AT THE SITE.
2. THE CONTRACTOR WILL BE RESPONSIBLE FOR THE REMOVAL OF ANY EXCESS MATERIAL OR MANMADE SOILS DETERMINED TO BE UNSUITABLE FOR USE ON THE SITE AND MAKE SURE THE SITE(S) RECEIVING THE EXCESS HAS AN APPROVED EROSION AND SEDIMENT CONTROL PLAN THAT MEETS THE CONDITIONS OF CHAPTER 102 AND/OR OTHER STATE OR FEDERAL REGULATIONS.
3. IMMEDIATELY UPON DISCOVERING ANY UNFORESEEN CIRCUMSTANCES INCREASING THE POTENTIAL FOR ACCELERATED EROSION AND/OR SEDIMENT POLLUTION, THE OPERATOR SHALL IMPLEMENT APPROPRIATE BEST MANAGEMENT PRACTICES TO ELIMINATE THE POTENTIAL FOR ACCELERATED EROSION AND/OR SEDIMENT POLLUTION AND CONTACT THE WAYNE COUNTY CONSERVATION DISTRICT TO ENSURE THAT THE BMP'S INSTALLED IS SUFFICIENT FOR THE SITUATION.
4. THE WASTES GENERATED THROUGH CONSTRUCTION INCLUDE CONCRETE AND UNSUITABLE SOILS.

SEQUENCE OF CONSTRUCTION FOR INDIVIDUAL BMP INSTALLATION

INFILTRATION BASINS:

1. PROTECT INFILTRATION BASIN AREA FROM COMPACTION PRIOR TO INSTALLATION.
2. PREVENT SEDIMENTATION AND/OR DAMAGE FROM CONSTRUCTION ACTIVITY. AFTER INSTALLATION, PREVENT SEDIMENT-LADEN WATER FROM ENTERING INLETS AND PIPES.
3. INSTALL AND MAINTAIN PROPER EROSION AND SEDIMENT CONTROL MEASURES DURING CONSTRUCTION.
4. EXCAVATE INFILTRATION BASIN TO THE BASIN BOTTOM OR TO THE DEPTH OF INFILTRATION MEDIA, AS REQUIRED, TO AN UNCOMPACTED SUBGRADE FREE FROM ROCKS AND DEBRIS. DO NOT COMPACT SUBGRADE.
5. SCARIFY THE EXISTING SOIL SURFACES. DO NOT COMPACT IN-SITU SOILS.
6. PERFORM BMP PERFORMANCE TESTING.
7. INSTALL OUTLET CONTROL STRUCTURES.
8. SEED AND MULCH TOPSOIL.
9. DO NOT REMOVE INLET PROTECTION OR OTHER EROSION AND SEDIMENT CONTROL MEASURES UNTIL SITE IS FULLY STABILIZED.

SNOUT

INSTALL AFTER TRIBUTARY DRAINAGE AREA TO THE INLET HAS REACHED PERMANENT STABILIZATION.

CHANNELS

VEGETATED:

1. ROUGH GRADE THE CHANNEL. EQUIPMENT SHALL AVOID EXCESSIVE COMPACTION AND/OR LAND DISTURBANCE. EXCAVATING EQUIPMENT SHALL OPERATE FROM THE SIDE OF THE CHANNEL AND NEVER ON THE BOTTOM. IF EXCAVATION LEADS TO SUBSTANTIAL COMPACTION OF THE SUBGRADE, 18 INCHES SHALL BE REMOVED AND REPLACED WITH A BLEND OF TOPSOIL AND SAND TO PROMOTE INFILTRATION AND BIOLOGICAL GROWTH. AT THE VERY LEAST, TOPSOIL SHALL BE THOROUGHLY DEEP PLOWED INTO THE SUBGRADE IN ORDER TO PENETRATE THE COMPACTED ZONE AND PROMOTE AERATION AND THE FORMATION OF MICROPORES. FOLLOWING THIS, THE AREA SHOULD BE DISCED PRIOR TO FINAL GRADING OF TOPSOIL.
2. FINE GRADE THE VEGETATED CHANNEL. ACCURATE GRADING IS CRUCIAL FOR SWALES. EVEN THE SMALLEST NON-CONFORMITIES MAY COMPROMISE FLOW CONDITIONS.
3. SEED, VEGETATE AND INSTALL PROTECTIVE LINING AS PER APPROVED PLANS AND ACCORDING TO THE SEEDING SCHEDULE. PLANT THE CHANNEL AT A TIME OF THE YEAR WHEN SUCCESSFUL ESTABLISHMENT WITHOUT IRRIGATION IS MOST LIKELY. HOWEVER, TEMPORARY IRRIGATION REPAIR, REPLACEMENT, RE-GRADING, RESEEDING, RE-MULCHING AND RE-NETTING MUST BE PERFORMED IMMEDIATELY IF EROSION AND SEDIMENT CONTROL BMP'S FAIL TO PERFORM AS EXPECTED, REPLACEMENT BMP'S OR MODIFICATIONS OF THOSE INSTALLED WILL BE REQUIRED.
4. ONCE ALL TRIBUTARY AREAS ARE SUFFICIENTLY STABILIZED, REMOVE TEMPORARY EROSION AND SEDIMENT CONTROLS. IT IS VERY IMPORTANT THAT THE CHANNEL BE STABILIZED BEFORE RECEIVING UPLAND STORMWATER FLOW.
5. REGRADE AND RESEED IMMEDIATELY AFTER CONSTRUCTION AND STABILIZATION HAS OCCURRED. ANY DAMAGED AREAS SHOULD BE FULLY RESTORED TO ENSURE FUTURE FUNCTIONALITY OF THE CHANNEL.

UNDERGROUND DETENTION BASIN/UNDERGROUND INFILTRATION BED

- INSTALL AND MAINTAIN ADEQUATE EROSION AND SEDIMENT CONTROL MEASURES DURING CONSTRUCTION.
- THE EXISTING SUBGRADE UNDER THE BEDS SHOULD NOT BE COMPACTED OR SUBJECT TO EXCESSIVE CONSTRUCTION EQUIPMENT TRAFFIC PRIOR TO GEOTEXTILE AND STONE BED PLACEMENT.
- WHERE EROSION OF SUBGRADE HAS CAUSED ACCUMULATION OF FINE MATERIALS AND/OR SURFACE PONDING, THIS MATERIAL SHOULD BE REMOVED WITH LIGHT EQUIPMENT AND THE UNDERLYING SOILS SCARIFIED TO A MINIMUM DEPTH OF 6 INCHES WITH A YAKE RAKE AND LIGHT TRACTOR, ALL FINE GRADING SHALL BE DONE BY HAND. ALL BED BOTTOMS SHOULD BE A LEVEL GRADE.
- INSTALL UPSTREAM AND DOWNSTREAM CONTROL STRUCTURES, CLEANOUTS, PERFORATED PIPING, AND ALL OTHER NECESSARY STORMWATER STRUCTURES.
- GEOTEXTILE AND BED AGGREGATE SHOULD BE PLACED IMMEDIATELY AFTER APPROVAL OF SUBGRADE PREPARATION AND INSTALLATION OF STRUCTURES. GEOTEXTILE SHOULD BE PLACED IN ACCORDANCE WITH MANUFACTURER'S STANDARDS AND RECOMMENDATIONS. ADJACENT STRIPS OF GEOTEXTILE SHOULD OVERLAP A MINIMUM OF 16 INCHES. IT SHOULD ALSO BE SECURED AT LEAST 4 FEET OUTSIDE OF BED IN ORDER TO PREVENT ANY RUNOFF OR SEDIMENT FROM ENTERING THE STORAGE BED. THIS EDGE STRIP SHOULD REMAIN IN PLACE UNTIL ALL BARE SOILS CONTIGUOUS TO BEDS ARE STABILIZED AND VEGETATED. AS THE SITE IS FULLY STABILIZED, EXCESS GEOTEXTILE ALONG THE BED EDGES CAN BE CUT BACK TO THE EDGE OF THE BED.
- BEGIN PLACING AASHTO #1 STONE IN MAXIMUM 8-INCH LIFTS OVER LINER TO THE DEPTH INDICATED ON THE DETAILS.
- INSTALL PERFORATED PIPE AS SHOWN ON THE DETAILS.
- BEGIN BACKFILLING PIPES WITH AASHTO #1 STONE TO THE DEPTH INDICATED ON THE DETAILS.
- WRAP NON-WOVEN GEO-TEXTILE AND OVERLAP A MINIMUM OF 3' OVER TOP OF STONE BACKFILL.
- BACKFILL WITH STRUCTURAL FILL OVER THE BED IN MAXIMUM 6-INCH LIFTS.
- PLACE PAVEMENT SECTION IN ACCORDANCE WITH THE DETAIL.
- DO NOT REMOVE EROSION AND SEDIMENT CONTROL BMP'S UNTIL TRIBUTARY AREAS ARE STABILIZED.

OWNER/DEVELOPER

EXETER TOWNSHIP
4975 DEMOSS ROAD
READING, PA 19606

ENGINEER/SURVEYOR

HERBERT, ROWLAND & GRUBIC, INC.
1275 GLENLIVET DRIVE, SUITE 330
ALLENTOWN, PA 18106

NPDES PERMIT NO.

PAC060612

PARCEL INFORMATION

DEED REFERENCE: 1483 506
ACCOUNT NUMBER: 43532508897742

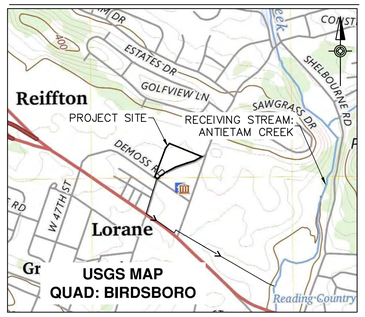

LOCATION MAP

SCALE: 1"=1,000'

Sheet List Table

Sheet Number	Sheet Title	Description
01	COVER SHEET	CV
02	NOTES	NT
03	OVERALL BOUNDARY PLAN	OVAL
04	EXISTING CONDITIONS	EC
05	OVERALL EROSION & SEDIMENT CONTROL PLAN	ESC-OA
06	EROSION & SEDIMENT CONTROL PLAN	ESC
07	STORM PROFILES	PR-1
08	STORM AND SANITARY PROFILES	PR-2
09	DETAILS	DT-1
10	DETAILS	DT-2

PA ONE CALL

ACT 287, AS AMENDED

PENNSYLVANIA ACT 287 (1974) AS AMENDED, REQUIRES NOTIFICATION BY EXCAVATORS, DESIGNERS, OR ANY PERSON PREPARING TO DISTURB THE EARTH'S SURFACE ANYWHERE IN THE COMMONWEALTH.
PA ONE-CALL SERIAL NO. 20252811468 HAS BEEN ASSIGNED TO THIS PROJECT ON 10/08/25.

PA ONE CALL-UTILITY LIST

COMPANY: WINDSTREAM
ADDRESS: 1450 CENTER POINT RD
HIAWATHA, IA. 52233
CONTACT:

STAGING OF MAJOR CONSTRUCTION ACTIVITIES

ALL EARTH DISTURBANCE ACTIVITIES SHALL PROCEED IN ACCORDANCE WITH THE FOLLOWING SEQUENCE. DEVIATION FROM THAT SEQUENCE MUST BE APPROVED IN WRITING FROM THE BERKS COUNTY CONSERVATION DISTRICT OR BY THE DEPARTMENT PRIOR TO IMPLEMENTATION.

- AT LEAST 7 DAYS PRIOR TO STARTING ANY EARTH DISTURBANCE ACTIVITIES, INCLUDING CLEARING AND GRUBBING, THE OWNER AND/OR OPERATOR SHALL INVITE ALL CONTRACTORS INVOLVED IN THOSE ACTIVITIES, THE LANDOWNER, ALL APPROPRIATE MUNICIPAL OFFICIALS, THE EROSION AND SEDIMENT CONTROL PLAN PREPARER, THE PCSM PLAN PREPARER, THE LICENSED PROFESSIONAL RESPONSIBLE FOR OVERSIGHT OF CRITICAL STAGES OF IMPLEMENTATION OF THE PCSM PLAN, AND A REPRESENTATIVE OF THE BERKS COUNTY CONSERVATION DISTRICT, TO AN ON-SITE PRE-CONSTRUCTION MEETING.
- UPON INSTALLATION OR STABILIZATION OF ALL PERIMETER SEDIMENT CONTROL BMP'S AND AT LEAST 3 DAYS PRIOR TO PROCEEDING WITH THE BULK EARTH DISTURBANCE ACTIVITIES, THE PERMITTEE OR CO-PERMITTEE SHALL PROVIDE NOTIFICATION TO THE DEPARTMENT OR AUTHORIZED CONSERVATION DISTRICT.
- THE PERMITTEE MUST RECORD THE APPROVED NPDES PERMIT AND PCSM PLANS AND PROVIDE A COPY OF THE FILING TO THE DISTRICT. THE DISTRICT HAS FIVE BUSINESS DAYS TO DETERMINE IF THE FILING IS ACCEPTABLE. THE PERMITTEE MUST ALSO INVITE THE PRE-CONSTRUCTION CO-PERMITTEES, OPERATORS, MUNICIPAL REPRESENTATIVES, LICENSED PROFESSIONALS OR DESIGNEES, AND ALL OTHERS RESPONSIBLE FOR IMPLEMENTING OR MONITORING THE EARTH DISTURBANCE ACTIVITY AND IMPLEMENTATION OF E&S AND PCSM PLANS AND CRITICAL STAGES OF THE APPROVED PCSM PLAN.
- AT LEAST 3 DAYS PRIOR TO STARTING ANY EARTH DISTURBANCE ACTIVITIES, OR EXPANDING INTO AN AREA PREVIOUSLY UNMARKED, THE PENNSYLVANIA ONE CALL SYSTEM INCORPORATED SHALL BE NOTIFIED AT 1-800-242-1776 FOR THE LOCATION OF EXISTING UNDERGROUND UTILITIES.
- OPERATION AND MAINTENANCE (O&M) - THE CO-PERMITTEE MUST CONDUCT VISUAL SITE INSPECTIONS THROUGHOUT THE DURATION OF CONSTRUCTION AND UNTIL THE NOT HAS BEEN APPROVED. WEEKLY INSPECTIONS AND WITHIN 24 HOURS AFTER THE END OF STORM EVENT IN THE AMOUNT OF 0.25 INCH OR GREATER OVER A 24-HOUR PERIOD OR THE OCCURRENCE OF SNOWMELT SUFFICIENT TO CAUSE A DISCHARGE. THE PERMITTEE MUST DOCUMENT EACH SITE INSPECTION ON DEP'S CHAPTER 102 VISUAL SITE INSPECTION REPORT (3800-FM-BCW0271D) OR ALTERNATIVE DOCUMENT OR ELECTRONIC FORM THAT COLLECTS AND RETAINS IDENTICAL INFORMATION. BEGINNING DECEMBER 8, 2025, QUALIFIED PERSONNEL MUST COMPLETE THE VISUAL SITE INSPECTION REPORTS. THE PERMITTEE MUST TAKE COLOR PHOTOGRAPHS (WITH A DATE AND TIME STAMP) OF E&S BMP'S AND PCSM SCMS ON THE PROJECT SITE MONTHLY.
- THE CO-PERMITTESS IS DEFINED AS THE SITE CONTRACTOR OR CONTRACTOR WHO CONDUCTS EARTH DISTURBANCE ACTIVITIES WITHIN THE PERMITTED LIMIT OF DISTURBANCE AND IS SUBSEQUENTLY RESPONSIBLE FOR ALL PERMITTEE RESPONSIBILITIES DURING CONSTRUCTION ACTIVITIES UNTIL NOT AND CLOSEOUT OF THE NPDES PERMIT IS RECEIVED.
- THE PERMITTEE MUST COMPLETE CONFIRMATION TESTING FOR INFILTRATION CAPACITY TO VERIFY THAT INFILTRATION SCMS WILL PERFORM AS DESIGNED. CONFIRMATION TESTING IS A CRITICAL STAGE OF SCM CONSTRUCTION THAT MUST BE OVERSEEN BY A LICENSED PROFESSIONAL OR DESIGNEE. THE TESTING INSPECTION MUST BE PERFORMED AFTER MAJOR EARTHWORK IS COMPLETE, AFTER PERMANENT STABILIZATION OF THE SCM'S DRAINAGE AREA, AND, PRIOR TO PLACING SOIL MEDIA OR STONE IN AN SCM. THE PERMITTEE MAY NOT PROCEED TO COMPLETE CONSTRUCTION OF THE SCM UNTIL A LICENSED PROFESSIONAL EVALUATES THE CONFIRMATION TESTING AND NOTIFIES THE PERMITTEE THAT THE INFILTRATION SCM MEETS THE PURPOSE AND INTENT OF THE APPROVED PCSM PLAN, WITHOUT OVERFLOWING AT THE STORM EVENT THE SCM IS DESIGNED TO MANAGE AND WILL PROTECT WATERS OF THE COMMONWEALTH. IF THE LICENSED PROFESSIONAL DETERMINES THAT THE SCM WILL NOT FUNCTION AS DESIGNED, THE DISTRICT SHOULD BE CONTACTED TO DISCUSS ANY CORRECTIVE MEASURES TO BE PERFORMED. CHANGES SHOULD BE PERFORMED UNDER THE DIRECTION OF THE LICENSED PROFESSIONAL AND THE SCM RETESTED. CHANGES MAY NEED AN AMENDMENT TO THE APPROVED PCSM PLAN. IF AN AMENDMENT IS REQUIRED, THE PERMITTEE MAY NOT PROCEED WITH IMPLEMENTING THE CHANGES UNTIL WRITTEN APPROVAL IS OBTAINED FROM THE DISTRICT. WHERE CONFIRMATION TESTING FOR INFILTRATION CAPACITY IS COMPLETED, THE PERMITTEE MUST REPORT THE RESULTS OF THE TESTING ON THE SCM CONSTRUCTION CERTIFICATION FORM.
- ALL EARTH DISTURBANCE ACTIVITIES SHALL PROCEED IN ACCORDANCE WITH THE FOLLOWING SEQUENCE. DEVIATION FROM THAT SEQUENCE MUST BE APPROVED IN WRITING FROM THE BERKS COUNTY CONSERVATION DISTRICT OR BY THE DEPARTMENT PRIOR TO IMPLEMENTATION. EACH STEP OF THE SEQUENCE SHALL BE COMPLETED BEFORE PROCEEDING TO THE NEXT STEP, EXCEPT WHERE NOTED.
- CLEARING, GRUBBING, AND TOPSOIL STRIPPING SHALL BE LIMITED ONLY TO THOSE AREAS DESCRIBED IN EACH STAGE OF THE CONSTRUCTION SEQUENCE. GENERAL SITE CLEARING, GRUBBING AND TOPSOIL STRIPPING MAY NOT COMMENCE IN ANY STAGE OR PHASE OF THE PROJECT UNTIL THE E&S BMP'S SPECIFIED BY THE BMP SEQUENCE FOR THAT STAGE OR PHASE HAS BEEN INSTALLED AND ARE FUNCTIONING AS DESCRIBED IN THE E&S PLAN.
- IMMEDIATELY UPON DISCOVERING UNFORESEEN CIRCUMSTANCES POSING THE POTENTIAL FOR ACCELERATED EROSION AND/OR SEDIMENT POLLUTION, THE OPERATOR SHALL IMPLEMENT APPROPRIATE BEST MANAGEMENT PRACTICES TO ELIMINATE THE POTENTIAL FOR ACCELERATED EROSION AND/OR SEDIMENT POLLUTION AND NOTIFY THE COUNTY CONSERVATION DISTRICT.
- ALL PUMPING OF SEDIMENT LADEN WATER SHALL BE THROUGH A SEDIMENT CONTROL BMP, SUCH AS A PUMPED WATER FILTER BAG OR EQUIVALENT SEDIMENT REMOVAL FACILITY, OVER UNDISTURBED VEGETATED AREAS.
- UPON TEMPORARY CESSATION OF AN EARTH DISTURBANCE ACTIVITY FOR 4 DAYS OR MORE, THE SITE SHALL BE IMMEDIATELY SEEDED, MULCHED OR OTHERWISE PROTECTED FROM ACCELERATED EROSION AND SEDIMENTATION PENDING FUTURE EARTH DISTURBANCE ACTIVITIES.
- THE CONTRACTOR IS RESPONSIBLE TO CONTACT THE DESIGN ENGINEER PRIOR TO INITIATING THE CONSTRUCTION OF THE FOLLOWING CRITICAL STAGES OF CONSTRUCTION: **DURING CONSTRUCTION OF THE INFILTRATION BASIN, DURING CONSTRUCTION OF INFILTRATION BED, DURING INSTALLATION OF OUTLET CONTROL STRUCTURE (SCM-1 & SCM-3), AND UPON FINAL COMPLETION TO VERIFY ALL PCSM MEASURES ARE INSTALLED AND FUNCTIONING AS DESIGNED.**

CONSTRUCTION SEQUENCE:

1. FIELD MARK THE LIMITS OF DISTURBANCE. ESTABLISH SURVEY BENCHMARKS AND REFERENCE POINTS.
2. INSTALL INLET PROTECTION AT EXISTING INLET-1 AND INLET-2. CLEAR AND GRUB THE NECESSARY AREAS TO INSTALL THE ROCK CONSTRUCTION ENTRANCE AND SILT SOCKS. STRIP/STOCKPILE TOPSOIL AS REQUIRED. INSTALL SILT SOCK AROUND THE STOCKPILE. INSTALL THE ROCK CONSTRUCTION ENTRANCE (#1-2), AND ALL SILT SOCK (#1 - 6). NO CONSTRUCTION VEHICLES ARE PERMITTED TO LEAVE THE SITE OTHER THAN OVER THE ROCK CONSTRUCTION ENTRANCE. INSTALL TEMPORARY CHAIN LINK FENCE ON FIRE STATION PARCEL AND STORAGE/STAGING AREA.
3. INSTALL SCM-1 HW ORIFICE PLACE AND REPLACE SCM-1 OUTLET STRUCTURE. **THIS IS A CRITICAL STAGE OF CONSTRUCTION AND A LICENSED PROFESSIONAL SHOULD BE NOTIFIED WHEN IT IS TO OCCUR.** INSTALL SILT SOCK AROUND SCM-1 OUTLET STRUCTURE AND HEADWALL.
4. CLEAR AND GRUB AREA NECESSARY FOR THE BYPASS PIPE SYSTEM TO BE INSTALLED (EW-1 TO HW-1 AND HW-2). STRIP AND STOCKPILE TOPSOIL. REMOVE THE STORM PIPE AND INLET ADJACENT TO THE PROPOSED BYPASS PIPE. RELOCATE THE IRRIGATION LINE. INSTALL STORM PIPE SYSTEM UPSLOPE OF EW-1. INSTALL INLET PROTECTION AND ROCK APRON AS SHOWN ON THE PLAN.
5. CLEAR AND GRUB AREA NECESSARY FOR THE SWALES UPSLOPE OF HW-1 AND HW-2 TO BE INSTALLED. STRIP AND STOCKPILE TOPSOIL. PROCEED WITH SWALE, INSTALLATION, SEED, LINE AND STABILIZE THE SWALES PER THE DETAILS. ALL RUNOFF ENTERING THE SWALE AND DOWNSLOPE BYPASS PIPE SYSTEM SHALL BE CLEAN.
6. INSTALL COMPOST FILTER SOCK UPSLOPE OF SCM-2. CLEAR AND GRUB AREA OF SCM-2. STRIP AND STOCKPILE TOPSOIL. BEGIN EXCAVATION/CONSTRUCTION OF SCM-2. **THIS IS A CRITICAL STAGE OF CONSTRUCTION AND A LICENSED PROFESSIONAL SHOULD BE NOTIFIED WHEN IT IS TO OCCUR.** COMPACTION OF THE BASIN FLOOR SHOULD BE AVOIDED. CONCURRENT WITH STEP 8, INSTALL EW-2A.1 AND EW-2B.1 AND ROCK APRON, BEGIN INSTALLING UPSLOPE PIPE. ONCE ENDWALLS AND PIPE PAST BASIN LIMIT IS INSTALLED, APPLY TEMPORARY SEED TO THE BASIN FLOOR. APPLY PERMANENT SEED TO THE BASIN SLOPES AND LINE THE SLOPES. INSTALL ORANGE CONSTRUCTION FENCE AROUND THE BASIN.
7. CLEAR AND GRUB REMAINING PORTIONS OF THE SITE. STRIP AND STOCKPILE TOPSOIL. STABILIZE STOCKPILE WITH TEMPORARY SEEDING. REMOVE ANY REMAINING INLETS. RELOCATE ANY REMAINING UTILITIES.
8. BEGIN ROUGH GRADING THE SITE. STABILIZE ANY AREAS THAT WILL REMAIN UNDISTURBED FOR MORE THAN FOUR DAYS ACCORDING TO THE TEMPORARY SEEDING SCHEDULE. INSTALL THE CONCRETE WASHOUT, ONCE AN AREA HAS REACHED FINAL GRADE, STABILIZE IT IMMEDIATELY. ONCE BUILDING FOOTPRINT IS GRADED, BUILDING CONSTRUCTION MAY BEGIN. ANY MATERIAL HAULED OFF-SITE SHALL BE CLEAN FILL TAKEN TO A SITE WITH AN E&S/NPDES PERMIT. CONTINUE INSTALLING STORM PIPE SYSTEM UPSLOPE OF EW-2A.1 AND EW-2B.1. INSTALL INLET SNOUTS. INSTALL INLET PROTECTION SHOWN ON THE PLAN. INSTALL STONE SUBBASE IN THE LARGE APRON, ADJACENT TO RCE #2.
9. BEGIN INSTALLING THE UNDERGROUND BED (SCM-3). **THIS IS A CRITICAL STAGE OF CONSTRUCTION AND A LICENSED PROFESSIONAL SHALL BE NOTIFIED TO WHEN IT IS TO OCCUR.** REFERENCE THE PCSM BMP INSTALLATION SEQUENCE AND SCM PERFORMANCE INFILTRATION TESTING ON THE PCSM PLANS FOR DETAILED SEQUENCING. THREE (3) FEET OF COVER SHALL BE PROVIDED ABOVE SCM-3. INSTALL INLETS AND STORM PIPE UPSLOPE OF SCM-3. INSTALL INLET SNOUTS. INSTALL INLET PROTECTION AS SHOWN ON THE PLAN. INSTALL ORANGE CONSTRUCTION FENCE AROUND THE BED.
10. INSTALL ELECTRIC, GAS, SEWER, WATER SERVICES AND ASSOCIATED UTILITIES. SEWER AND WATER INSTALL WITHIN GIBRALTAR ROAD SHALL BE COORDINATED WITH PAWC AND THE TOWNSHIP. APPROPRIATE ROAD CLOSURES, DETOURS AND TRAFFIC CONTROL SHALL BE PROVIDED. THE LENGTH OF EXCAVATED TRENCH OPEN SHALL NOT BE GREATER THAN THE TOTAL LENGTH OF PIPE THAT CAN BE INSTALLED AND BACKFILLED IN ONE WORKING DAY.
11. FINISH INSTALLING THE STORM PIPES AND INLETS WITHIN GIBRALTAR ROAD. INSTALL INLET PROTECTION SHOWN ON THE PLAN.
12. FINISH GRADING PROPOSED AREAS AND INSTALL THE CURB, SUBBASE AND BASE COURSE.
13. FINALIZE SITE GRADING AND LANDSCAPING. ONCE FINAL GRADE IS REACHED, SPREAD TOPSOIL, SEED AND MULCH. COMPLETE INSTALLATION OF ASPHALT SURFACES AND CONCRETE/CONCRETE SIDEWALKS AS SHOWN ON THE PLANS. STRIPE THE PARKING LOT AS SHOWN ON THE PLANS.
14. UPON COMPLETION OF ALL EARTH DISTURBANCE ACTIVITIES AND PERMANENT STABILIZATION OF ALL DISTURBED AREAS, THE OWNER AND/OR OPERATORS SHALL CONTACT THE BERKS COUNTY CONSERVATION DISTRICT FOR A FINAL INSPECTION PRIOR TO THE REMOVAL OF THE BMP'S.
15. UPON FINAL SITE STABILIZATION, AND CONCURRENCE FROM BERKS COUNTY CONSERVATION DISTRICT, CONVERT SCM-2 INTO PERMANENT STORMWATER MANAGEMENT FACILITY ONCE AT LEAST 70 PERCENT OF THE TRIBUTARY DRAINAGE AREA IS ADEQUATELY STABILIZED BY REGRADING AND SEEDING AS NECESSARY TO ACHIEVE THE FINAL GRADES INDICATED ON THE POST CONSTRUCTION STORMWATER MANAGEMENT PLAN. **THIS IS A CRITICAL STAGE OF CONSTRUCTION AND A LICENSED PROFESSIONAL SHALL BE NOTIFIED WHEN IT IS TO OCCUR.** REMOVE ANY SEDIMENT, SCARIFY THE BASIN FLOOR, PERFORM SCM PERFORMANCE INFILTRATION TESTING AND INSTALL THE AMENDED SOIL. STABILIZE THE BASIN FLOOR IMMEDIATELY. ONCE GRASS IS ESTABLISHED THROUGHOUT THE BASIN, REMOVE DOWNSLOPE COMPOST FILTER SOCK. DO NOT PERFORM BASIN CONVERSION DURING NON-GERMINATING PERIODS. IMMEDIATELY STABILIZE AREAS DISTURBED IN THIS PHASE OF WORK BY PLACING STONE BASE OR SEED AND MULCH, AS REQUIRED.
16. ONCE PERMANENT SITE STABILIZATION IS ACHIEVED, (DEFINED AS A MINIMUM UNIFORM 90% PERENNIAL VEGETATIVE COVER OR OTHER PERMANENT NON-VEGETATIVE COVER WITH A DENSITY SUFFICIENT TO RESIST ACCELERATED SURFACE EROSION AND SUBSURFACE CHARACTERISTICS SUFFICIENT TO RESIST SLIDING AND OTHER MOVEMENTS) AND WITH CONSENT FROM THE BERKS COUNTY CONSERVATION DISTRICT REMOVE SILT SOCK, INLET PROTECTION, ETC.
17. UPON COMPLETION OF ALL EARTH DISTURBANCE ACTIVITIES, REMOVAL OF ALL TEMPORARY BMP'S, INSTALLATION OF ALL PERMANENT PCSM BMP'S, AND PERMANENT STABILIZATION OF ALL DISTURBED AREAS, THE OWNER AND OPERATORS SHALL CONTACT THE BERKS COUNTY CONSERVATION DISTRICT FOR A FINAL INSPECTION. SUBMIT A NOTICE OF TERMINATION TO THE BERKS COUNTY CONSERVATION DISTRICT FOR THE NPDES PERMIT.

GEOLOGIC POTENTIAL FOR ON-SITE SOILS TO CAUSE POLLUTION

THE SITE IS LOCATED IN KARST (CARBONATE) GEOLOGIC SETTING WHERE THE POTENTIAL FOR GROUNDWATER POLLUTION FROM ON-SITE SOILS MAY EXIST. SITE-SPECIFIC TESTING AND EVALUATION FOR KARST FEATURES AND LIMITING ZONES WAS PREFORMED BY DAVID BLACKMORE & ASSOCIATES, INC. (DBA) AND NOTED IN THEIR GEOLOGICAL REPORT DATED JANUARY 27, 2026. IN THE EVENT OF A SINKHOLE BEING DISCOVERED, THE SERVICES OF A GEOTECHNICAL ENGINEER OR PROFESSIONAL GEOLOGIST SHALL BE OBTAINED FOR THE SINKHOLE REPAIR.

SURVEY NOTES

1. SUBJECT PROPERTY LINES DEPICTED ON THIS PLAN HAVE BEEN ESTABLISHED BASED UPON SURVEY RECEIVED FROM GVC.
2. RIGHT-OF-WAY DEPICTED HAS BEEN ESTABLISHED REFERENCING THE FOLLOWING PLANS OF RECORD:
   DEMOSS ROAD (T-667) - "FAIRLANE COMMERCAIL LOTS" DATED JUNE 1994.
   FAIRLANE ROAD - "FINAL SUBDIVISION/LAND DEVELOPMENT PLAN FAIRLANE COMMERCIAL LOT 1" DATED APRIL 1992, INST #1992024457.
3. THIS SURVEY HORIZONTALLY REFERENCES THE NORTH AMERICAN DATUM OF 1983 (NAD 83), PENNSYLVANIA STATE PLANE PA SOUTH ZONE, DETERMINED THROUGH GNSS METHODS BASED UPON POSITIONAL INFORMATION REFERENCED THROUGH THE KEYNETGPS GNSS VRS NETWORK.
4. THE VERTICAL DATUM IS BASED ON THE NORTH AMERICAN VERTICAL DATUM OF 1988 (NAVD 88), GEOID 18 DETERMINED THROUGH GNSS METHODS BASED UPON POSITIONAL INFORMATION REFERENCED THROUGH KEYNET GPS GNSS VRS NETWORK. DATUM REFERENCED PROJECT BENCHMARKS LOCATED AS:
   BM1 IS A CONCRETE MONUMENT FND LOCATED ALONG THE NORTHERN RIGHT-OF-WAY LINE OF GIBRALTOR ROAD (T-668) APPROX. 135' SOUTHWEST FROM UTILITY POLE ME 52913-36008. BM1 HAS AN ELEVATION OF 260.06.
   BM2 IS A DRILL HOLE LOCATED IN A CURB ALONG DEMOSS ROAD (T-667) APPROX. 33' SOUTHWEST OF A TOWNSHIP WELL MARKER LOCATED IN DEMOSS ROAD. BM2 HAS AN ELEVATION OF 245.33'.
5. TOPOGRAPHIC EXISTING CONDITIONS AND CONTOURS SHOWN ARE DERIVED FROM FIELD RUN TOPOGRAPHIC SURVEY PERFORMED BY GVC, AND SUPPLEMENTED FIELD RUN TOPOGRAPHIC SURVEY PERFORMED BY HRG, OCTOBER 2025.
6. NO WETLANDS WERE IDENTIFIED ON THE SITE PER A HERBERT, ROWLAND AND GRUBIC, INC. SEPTEMBER 4, 2025 SITE INVESTIGATION.
7. THE LOCATIONS OF UTILITIES AS SHOWN HEREON ARE BASED ON ABOVEGROUND FEATURES, FIELD OBSERVATIONS\SURVEY, AND RECORD DRAWINGS PROVIDED BY UTILITY COMPANIES. LOCATIONS OF UNDERGROUND UTILITIES/STRUCTURES MAY VARY FROM LOCATIONS SHOWN HEREON. ADDITIONAL BURIED UTILITIES/STRUCTURES MAY BE ENCOUNTERED. NO EXCAVATIONS WERE MADE DURING THE PROGRESS OF THIS SURVEY TO LOCATE BURIED UTILITIES/STRUCTURES. IT SHALL BE THE CONTRACTORS RESPONSIBILITY TO FIELD VERIFY THE EXACT LOCATION AND DEPTH OF ALL UTILITY LINES PRIOR TO THE START OF ANY CONSTRUCTION ACTIVITIES.
8. PRIOR TO THE COMMENCEMENT OF ANY CONSTRUCTION ACTIVITIES, THE CONTRACTOR SHALL CONTACT ALL UTILITY COMPANIES IN COMPLIANCE WITH ACT 187 TO VERIFY THE EXACT LOCATION OF ALL UNDERGROUND UTILITIES. PA ONE CALL WAS PERFORMED PRIOR TO FIELD SURVEYING. SERIAL NUMBER 20252811468.

ERNST SEED MIX SPECIFICATIONS

NOTE: SPECIFICATIONS OF SEED MIXES ARE SUBJECT CHANGE AT THE DISCRETION OF ERNST CONSERVATION SEEDS, INC. CONTACT THE MANUFACTURER FOR CURRENT SEED MIX SPECIFICATIONS.

FORMULA B

20% PERENNIAL RYEGRASS MIXTURE (LOLIUM PERENNE). A COMBINATION OF IMPROVED CERTIFIED VARIETIES WITH NO ONE VARIETY EXCEEDING 50% OF THE TOTAL RYEGRASS COMPONENT.

30% CREEPING RED FESCUE OR CHEWINGS FESCUE (FESTUCA RUBRA OR SSP COMMUTATE) (IMPROVED AND CERTIFIED)

45% KENTUCKY BLUEGRASS MIXTURE (POA PRATENSIS). A COMBINATION OF IMPROVED CERTIFIED VARIETIES WITH NO ONE VARIETY EXCEEDING 50% OF THE TOTAL BLUEGRASS COMPONENT.

5% ANNUAL RYEGRASS (LOLIUM MULTIFLORUM)

NATIVE DETENTION AREA MIX - ERNMX-183

25.0% PANICUM VIRGATUM, 'SHELTER' (SWITCHGRASS, SHELTER)
24.0% PANICUM CLANDESTINUM, 'TIOGA' (DEERTONGUE, 'TIOGA')
22.0% CAREX VULPINOIDEA, PA ECOTYPE (FOX SEDGE, PA ECOTYPE)
21.0% ELYMUS VIRGINICUS, PA ECOTYPE (VIRGINIA WILDRYE, PA ECOTYPE)
6.0% AGROSTIS PERENNIANS, ALBANY PINE BUSH-NY ECOTYPE (AUTUMN BENTGRASS, ALBANY PINE BUSH - NY ECOTYPE)
1.0% JUNCUS EFFUSUS (SOFT RUSH)
1.0% PANICUM RIGIDULUM, PA ECOYTPE (REDTOP PANICGRASS, PA ECOTYPE)

TOPSOIL APPLICATION

1. GRADED AREAS SHALL BE SCARIFIED OR OTHERWSE LOOSENED TO A DEPTH OF 3 TO 5 INCHES PRIOR TO PERMIT BONDING OF THE TOPSOIL TO THE SURFACE AREAS AND TO PROVIDE A ROUGHENED SURFACE TO PREVENT TOPSOIL FROM SLIDING DOWN SLOPE.
2. TOPSOIL SHOULD BE UNIFORMLY DISTRIBUTED ACROSS THE DISTURBED AREA TO A DEPTH OF 4 TO 8 INCHES MINIMUM - 2 INCHES ON FILL OUTSLOPES. SPREADING SHOULD BE DONE IN SUCH A MANNER THAT SODDING OR SEEDING CAN PROCEED WITH A MINIMUM OF ADDITIONAL PREPARATION OR TILLAGE. IRREGULARITIES IN THE SURFACE RESULTING FROM TOPSOIL PLACEMENT SHOULD BE CORRECTED IN ORDER TO PREVENT FORMATION OF DEPRESSIONS UNLESS SUCH DEPRESSIONS ARE PART OF THE PCSM PLAN.
3. TOPSOIL SHOULD NOT BE PLACED WHILE THE TOPSOIL OR SUBSOIL IS IN A FROZEN OR MUDDY CONDITION, WHEN THE SUBSOIL IS EXCESSIVELY WET, OR IN A CONDITION THAT MAY OTHERWISE BE DETRIMENTAL TO PROPER GRADING AND SEEDBED PREPARATION. COMPACTED SOILS SHOULD BE SCARIFIED 6 TO 12 INCHES ALONG CONTOUR WHEREVER POSSIBLE PRIOR TO SEEDING.

SOILS TABLE - NRCS SOIL SURVEY

SOIL TYPE	HYDROLOGIC SOIL GROUP	AVG. SLOPE
AsB - Athol silt Loam	B	3-8%
UgB - Urban Land	N/A	0-8%

SOIL LIMITATIONS

SOIL NAME	CUTBACKS CAVE	CORROSIVE TO CONCRETE \ STEEL	DROUGHTY	EASILY ERODIBLE	FLOODING	DEPTH TO SATURATED ZONE \ SEASONAL HIGH WATER TABLE	HYDRIC\VHYDRIC INCLUSIONS	LOW STRENGTH \ LANDSLIDE PRONE	SLOW PERCOLATION	PIPING	POOR SOURCE OF TOPSOIL	FROST ACTION	SHRINK-SWELL	POTENTIAL SINKHOLE	PONDING	WETNESS
ATHOL	X	C							X	X	X	X				
URBAN						X						X				

SOIL LIMITATION RESOLUTIONS

LIMITATION	RESOLUTION
CUTBANKS CAVE	CONDUCT TRENCHING OPERATIONS IN ACCORDANCE WITH OSHA TECHNICAL MANUAL FOR TRENCHING. STABILIZE BANKS IMMEDIATELY WITH SEED, MULCH, EROSION CONTROL MATS, BONDED FIBER MATRIX, OR A COMBINATION OF THESE AND/OR OTHER METHODS.
CORROSIVE TO CONCRETE OR STEEL	PROTECT CONCRETE AND STEEL WITH PROTECTIVE COATINGS, SELECT ALTERNATIVE MATERIALS IN LIEU OF CONCRETE OR STEEL, OR A COMBINATION OF THESE AND OR OTHER METHODS.
DROUGHTY	SELECT VEGETATIVE SPECIES TOLERANT TO DRY CONDITIONS, IRRIGATE VEGETATED AREAS, OR IMPLEMENT COMBINATIONS OF THESE AND/OR OTHER METHODS.
EASILY ERODIBLE	PROVIDE TEMPORARY OR PERMANENT CHANNEL LINING, DECREASE CHANNEL GRADE, INCREASE CHANNEL WIDTH, SELECT VEGETATION WITH A GREATER RETARDANCE, SELECT PERMANENT LININGS OTHER THAN GRASSES, OR IMPLEMENTING COMBINATIONS OF THESE AND/OR OTHER METHODS.
HYDRIC SOILS	SELECT VEGETATIVE SPECIES TOLERANT TO WET CONDITIONS, TILE VEGETATED AREAS, OR IMPLEMENT COMBINATIONS OF THESE AND/OR OTHER METHODS. UTILIZE PUMPED WATER FILTER BAGS TO DEWATER DISTURBED ARES DURING CONSTRUCTION.
LOW STRENGTH \ LANDSLIDE PRONE	LOCATE ROADWAYS TO OTHER SOIL TYPESS, IMPORT OTHER SOILS FOR THESE ROADWAY CONSTRUCTION, OR IMPLEMENT A COMBINATION OF THESE AND/OR OTHER METHODS. FOR CUT/FILL SLOPES, REDUCE SLOPE, INSTALL EROSION CONTROL MATTING, OR IMPLEMENT A COMBINATION OF THESE AND/OR OTHER METHODS.
SLOW PERCOLATION	LOCATE INFILTRATION FACILITIES TO ANOTHER SOIL TYPE, RESTRICT CONSTRUCTION TRAFFIC AT THOSE LOCATIONS, TILL SOIL IN THOSE LOCATIONS, ADD SOIL AMENDMENTS SUCH AS COMPOST AT THOSE LOCATIONS.
PIPING	IMPORT OTHER SOIL FOR EMBANKMENTS OF SEDIMENT BASINS, SEDIMENT TRAPS, STORM WATER RETENTION BASINS AND STORM WATER DETENTION BASINS, LOCATE THOSE FACILITIES ON OTHER SOIL TYPES, LIMIT EMBANKMENT SLOPE STEEPNESS, OR IMPLEMENT COMBINATIONS OF THESE AND/OR OTHER METHODS.
POOR SOURCE OF TOPSOIL	IDENTIFY AND RESOLVE CHARACTERISTICS THAT RENDER THE SOIL TYPES POORLY SUITED AS TOPSOIL. PERFORM SOIL TESTS TO DETERMINE THE REQUIRED SOIL AMENDMENTS AND APPLICATION RATES. IDENTIFY SOILS ON-SITE THAT ARE ADEQUATE SOURCES OF TOPSOIL AND STOCKPILE THESE FOR USE DURING RESTORATION.
FROST ACTION	IMPORT OTHER SOIL FOR EMBANKMENTS OF SEDIMENT BASINS, SEDIMENT TRAPS, STORM WATER RETENTION BASINS AND STORM WATER DETENTION BASINS, LOCATE THOSE FACILITIES ON OTHER SOIL TYPES, DO NOT CONSTRUCT EMBANKMENTS DURING PERIODS PRONE TO FROST, OR IMPLEMENT COMBINATIONS OF THESE AND/OR OTHER METHODS.

SEEDING SCHEDULE

APPLICATION	TOPSOIL PLACEMENT DEPTH	SPECIES	% PURE LIVE SEED	SEEDING APPLICATION RATE	* FERTILIZER TYPE	* FERTILIZER APPLICATION RATE	* LIMING RATE	MULCH TYPE	MULCHING RATE	ANCHOR MATERIAL	ANCHOR METHOD	RATE OF ACHOR MATERIAL APPLICATION	SEEDING DATES
TEMPORARY	N/A	FORMULA E (ANNUAL RYEGRASS)	PER PENNDOT 408 SPECS	10 LB/1000 SY	10-10-20 FERTILIZER	25 LB/1000 SF	2480 LB/1000 SY	STRAW	3 T/AC	WOOD FIBER	TACKTIFIERS (2.5-3.5% BY WEIGHT)	2000 LB/AC	3/15 TO 10/15
MAINTAINED LAWN, <3:1 SLOPES	6" ±1"	PENNDOT FORMULA B	PER PENNDOT 408 SPECS	44 LB/1000 SY	10-10-20 COMMERCIAL FERTILIZER & 31-0-0 IBDU	210 LB/1000 SY & 61 LB/1000 SY	2480 LB/1000 SY	STRAW	3 T/AC	WOOD FIBER	TACKTIFIERS (2.5-3.5% BY WEIGHT)	2000 LB/AC	3/15 TO 6/1 & 8/1 TO 10/15
MAINTAINED LAWN, 3:1 SLOPES	6" ±1"	PENNDOT FORMULA B	PER PENNDOT 408 SPECS	44 LB/1000 SY	10-10-20 COMMERCIAL FERTILIZER & 31-0-0 IBDU	210 LB/1000 SY & 61 LB/1000 SY	2480 LB/1000 SY	TENSAR HYDRA-CM STEEP SLOPE MATRIX	3500 LB/AC	TACKIFIER	HYDRAULICALLY APPLIED	PER MFR SPECS	3/15 TO 6/1 & 8/1 TO 10/15
VEGETATED CHANNEL	6" ±1"	PENNDOT FORMULA B	PER PENNDOT 408 SPECS	50 LB/1000 SY	10-10-20 COMMERCIAL FERTILIZER & 31-0-0 IBDU	210 LB/1000 SY & 61 LB/1000 SY	2480 LB/1000 SY	PER DETAILS	PER DETAILS	PER DETAILS	PER DETAILS	PER DETAILS	3/15 TO 6/1 & 8/1 TO 10/15
SWM BASIN INTERIOR	SEE DETAIL	*ERNST ERNMX-183 - NATIVE DETENTION AREA MIX	PER MFR SPECS	20 LB/AC	N/A	N/A	N/A	STRAW	3 T/AC	NETTING	STAPLES PER MFR SPECS	N/A	3/15 TO 6/1 & 8/1 TO 10/15

- LIMESTONE, FERTILIZER, SEEDING AND MULCHING SHOULD CONFORM TO THE E&S MANUAL, UNLESS SPECIFIC TESTING IS PERFORMED AND SPECIFIES AN ALTERNATE. THE TEST RESULTS MAY BE SUBSTITUTED IN LIEU OF THE APPLICATION TYPE AND RATES SHOWN ON THIS SEEDING SCHEDULE. FERTILIZER TYPES AND RATES SHOWN IN PENNDOT PUBLICATION 408 OR THE RECOMMENDATIONS OF ERNST CONSERVATION SEED MANUFACTURE MAY ALSO BE SUBSTITUTED FOR ITS SEED MIX IN THE ABSENCE OF SOIL TESTING.
- CONTACT ERNST CONSERVATION SEED MANUFACTURER TO PROVIDE AN ANNUAL RYEGRASS COMPONENT (OR APPROVED EQUIVALENT) FOR EACH OF THE SEED MIXES. THE ANNUAL RYEGRASS COMPONENT OF APPROVED EQUIVALENT IS INTENED TO COMPLEMENT THE ERNEST SEED MIXES SPECIFIED AND ENSURE TEMPORARY STABILIZATION OF DISTURBED AREAS CAN BE ACHIEVED WITHIN THE FIRST GROWING SEASON UNTIL THE SPECIFIED ERNST CONSERVATION MIXES CAN GERMINATE AND PROVIDE PERMANENT STABILIZATION.

ALL DRAWINGS ARE PROTECTED BY FEDERAL COPYRIGHT BY MANNS WOODWARD STUDIOS, INC. AND CAN NOT BE REPRODUCED OR MODIFIED IN ANY MANNER WITHOUT WRITTEN PERMISSION. DOCUMENTS MAY NOT BE USED IN PART OR WHOLE TO DEVELOP THE DESIGN OF ANOTHER BUILDING WITHOUT EXPRESS WRITTEN PERMISSION BY MANNS WOODWARD STUDIOS.

MW STUDIOS
ARCHITECT


GIBRALTAR ROAD (T-834)
FAIRLANE ROAD (T-834)
DEMOSS ROAD (T-836)
N14°53'35"E
519.22'
S58°28'42"E
3.81.84.55
3.82.84.595
643.29'
N57°10'15"W
446.60'
N32°49'45"W
N.36°10'E
M.64.12.81S
R=380.00'
L=73.41'
CH=N65°49'59"E
DIST=73.30'
R=440.00'
L=209.71'
CH=N57°42'48"E
DIST=207.73'
S71°22'02"E
143.47'
S.69°E
S.69°E
S.69°E

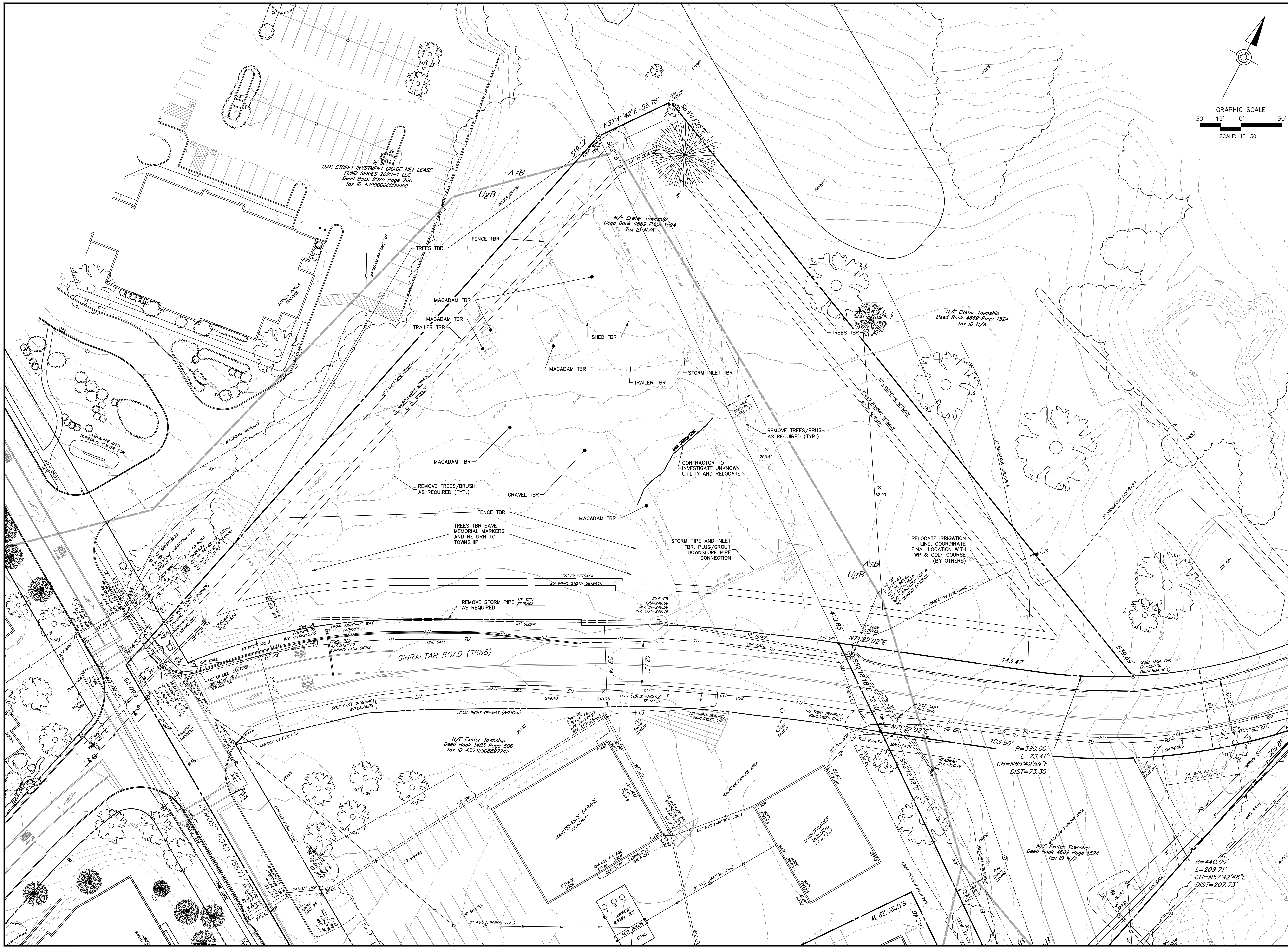

EROSION & SEDIMENT CONTROL PLAN
FOR
EMERGENCY SERVICES CENTER

EXETER TOWNSHIP
4975 DEMOSS ROAD
READING, PA 19606

EXETER TOWNSHIP, BERKS COUNTY, PENNSYLVANIA

HRG
HERBERT, ROWLAND & GRUBIC, INC.
1275 GLENLIVET DRIVE
SUITE 145
ALLENTOWN, PA 18106
610.351.0311 | hrg-inc.com

PROFESSIONAL SEAL:

HRG PROJECT NUMBER:	R006367.0427
PLAN DATE:	04/01/2026
DRAWING SCALE:	AS SHOWN
PROJ. MANAGER:	DENNIS REICHEL

REVISIONS

NO.	DATE	DESCRIPTION
1	2026.04.14	REV AS PER 04/09/2026 BCCD COMMENTS
2	2026.04.23	REV AS PER 04/17/2026 BCCD COMMENTS
3	2026.05.15	REV AS PER 5/11/2026 BCCD COMMENTS
4	2026.10.01	FIELD CHANGE/BID SET
5		
6		
7		
8		
9		

SHEET TITLE:
EXISTING CONDITIONS

SHEET: EC 04

MW STUDIOS
ARCHITECTURE + MASTER PLANNING
8098 SANDPIPER CIR, SUITE
NOTTINGHAM, MD 21236
410-344-1460
INFO@MWSARCH.COM
WWW.MWSARCH.COM

CONSULTANT:

HRG
HERBERT, ROWLAND & GRUBIC, INC.
1275 GLENLIVET DRIVE
SUITE 145
ALLENTOWN, PA 18106
610.351.0311 | hrg-inc.com

SEAL:

COMMONWEALTH OF PENNSYLVANIA
REGISTERED PROFESSIONAL
DENNIS J REICHEL
ENGINEER
NO PE070767
10/01/2026

EXETER TOWNSHIP EMERGENCY SERVICES FACILITY 70 GIBRALTER ROAD READING, PA 19606

PROJECT NUMBER:
25-049

SUBMISSION:
BID SET

ORIGINAL ISSUE DATE:
10/01/2026

SHEET REVISION SCHEDULE:
No. DATE

REFERENCE PLAN

SHEET NUMBER:

C104

ALL DRAWINGS ARE PROTECTED BY FEDERAL COPYRIGHT BY MANNS WOODWARD STUDIOS, INC. AND CAN NOT BE REPRODUCED OR MODIFIED IN ANY MANNER WITHOUT WRITTEN PERMISSION. DOCUMENTS MAY NOT BE USED IN PART OR WHOLE TO DEVELOP THE DESIGN OF ANOTHER BUILDING WITHOUT EXPRESS WRITTEN PERMISSION BY MANNS WOODWARD STUDIOS.

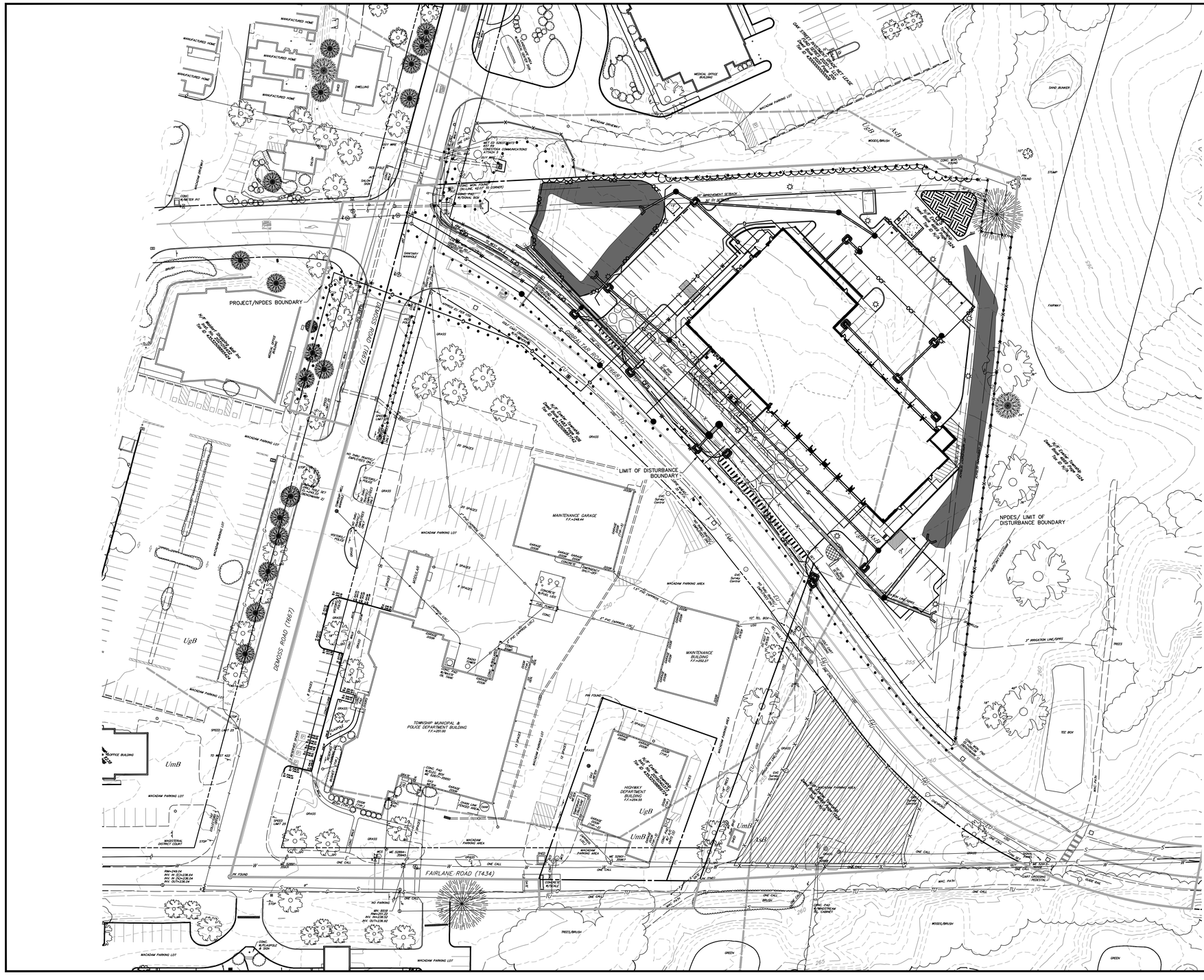

HRG

HERBERT, ROWLAND & GRUBIC, INC.
1275 GLENLIVET DRIVE
SUITE 145
ALLENTOWN, PA 18106
610.351.0311 | hrg-inc.com

EROSION & SEDIMENT CONTROL PLAN
FOR
EMERGENCY SERVICES CENTER

EXETER TOWNSHIP
4975 DEMOSS ROAD
READING, PA 19606

EXETER TOWNSHIP, BERKS COUNTY, PENNSYLVANIA

PROFESSIONAL SEAL:

HRG PROJECT NUMBER: R006367.0427
PLAN DATE: 04/01/2026
DRAWING SCALE: 1"=40'
PROJ. MANAGER: DENNIS REICHEL

REVISIONS

NO.	DATE	DESCRIPTION
1	2026.04.14	REV AS PER 04/09/2026 BCCD COMMENTS
2	2026.04.23	REV AS PER 04/17/2026 BCCD COMMENTS
3	2026.05.15	REV AS PER 5/11/2026 BCCD COMMENTS
4	2026.10.01	FIELD CHANGE/BID SET
5		
6		
7		
8		
9		

SHEET TITLE:
OVERALL EROSION & SEDIMENT CONTROL PLAN

SHEET: **ESC-OA** 05

MW STUDIOS
ARCHITECTURE + MASTER PLANNING
8098 SANDPIPER CIR, SUITE
NOTTINGHAM, MD 21236
☎ 410-344-1460
✉ INFO@MWSARCH.COM
WWW.MWSARCH.COM

CONSULTANT:

HRG
HERBERT, ROWLAND & GRUBIC, INC.
1275 GLENLIVET DRIVE
SUITE 145
ALLENTOWN, PA 18106
610.351.0311 | hrg-inc.com

SEAL:

COMMONWEALTH OF PENNSYLVANIA
REGISTERED PROFESSIONAL
DENNIS J. REICHEL
ENGINEER
No. PE070767
10/01/2026

EXETER TOWNSHIP
EMERGENCY SERVICES FACILITY
70 GIBRALTER ROAD
READING, PA 19606

PROJECT NUMBER:
25-049

SUBMISSION:
BID SET

ORIGINAL ISSUE DATE:
10/01/2026

SHEET REVISION SCHEDULE:
No. DATE

REFERENCE PLAN

SHEET NUMBER:

C105

ALL DRAWINGS ARE PROTECTED BY FEDERAL COPYRIGHT BY MANNS WOODWARD STUDIOS, INC. AND CAN NOT BE REPRODUCED OR MODIFIED IN ANY MANNER WITHOUT WRITTEN PERMISSION. DOCUMENTS MAY NOT BE USED IN PART OR WHOLE TO DEVELOP THE DESIGN OF ANOTHER BUILDING WITHOUT EXPRESS WRITTEN PERMISSION BY MANNS WOODWARD STUDIOS.

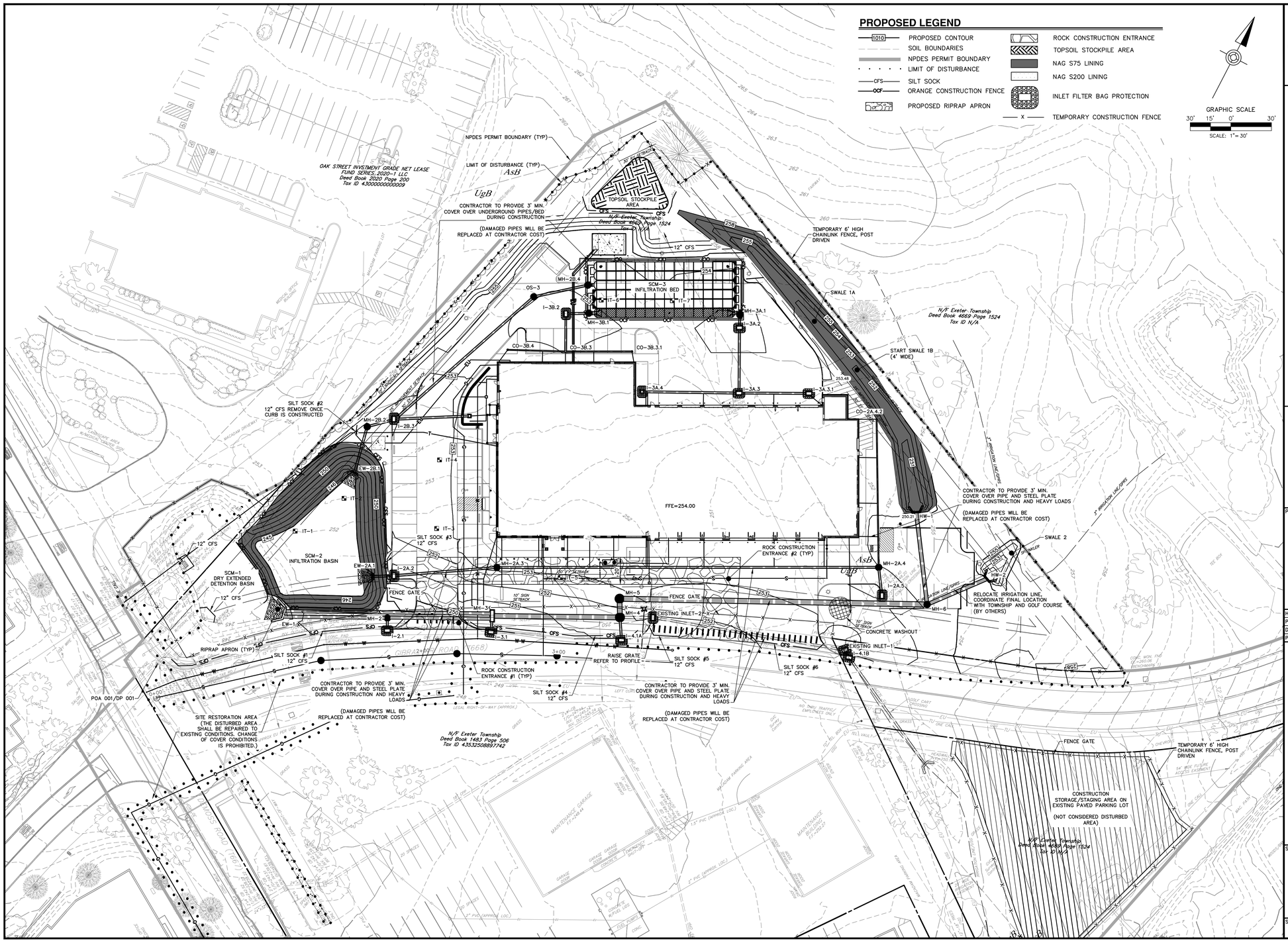

HRG

HERBERT, ROWLAND & GRUBIC, INC.
1275 GLENLIVET DRIVE
SUITE 145
ALLENTOWN, PA 18106
610.351.0311 | hrg-inc.com

EROSION & SEDIMENT CONTROL PLAN FOR EMERGENCY SERVICES CENTER

EXETER TOWNSHIP
4975 DEMOSS ROAD
READING, PA 19606

EXETER TOWNSHIP, BERKS COUNTY, PENNSYLVANIA

PROFESSIONAL SEAL:

HRG PROJECT NUMBER: R006367.0427
PLAN DATE: 04/01/2026
DRAWING SCALE: AS SHOWN
PROJ. MANAGER: DENNIS REICHEL

REVISIONS

NO.	DATE	DESCRIPTION
1	2026.04.14	REV AS PER 04/09/2026 BCCD COMMENTS
2	2026.04.23	REV AS PER 04/17/2026 BCCD COMMENTS
3	2026.05.15	REV AS PER 5/11/2026 BCCD COMMENTS
4	2026.10.01	FIELD CHANGE/BID SET
5		
6		
7		
8		
9		

SHEET TITLE:
EROSION & SEDIMENT CONTROL PLAN

SHEET: ESC 06

ALL DRAWINGS ARE PROTECTED BY FEDERAL COPYRIGHT BY MANNS WOODWARD STUDIOS, INC. AND CAN NOT BE REPRODUCED OR MODIFIED IN ANY MANNER WITHOUT WRITTEN PERMISSION. DOCUMENTS MAY NOT BE USED IN PART OR WHOLE TO DEVELOP THE DESIGN OF ANOTHER BUILDING WITHOUT EXPRESS WRITTEN PERMISSION BY MANNS WOODWARD STUDIOS.

MW STUDIOS
ARCHITECTURE + MASTER PLANNING
8098 SANDPIPER CIR, SUITE
NOTTINGHAM, MD 21236
☎ 410-344-1460
✉ INFO@MWSARCH.COM
WWW.MWSARCH.COM

CONSULTANT:

HRG
HERBERT, ROWLAND & GRUBIC, INC.
1275 GLENLIVET DRIVE
SUITE 145
ALLENTOWN, PA 18106
610.351.0311 | hrg-inc.com

SEAL:

COMMONWEALTH OF PENNSYLVANIA
REGISTERED PROFESSIONAL
DENNIS J. REICHEL
ENGINEER
PE070767
10/01/2026

EXETER TOWNSHIP
EMERGENCY SERVICES FACILITY
70 GIBRALTER ROAD
READING, PA 19606

PROJECT NUMBER:
25-049

SUBMISSION:
BID SET

ORIGINAL ISSUE DATE:
10/01/2026

SHEET REVISION SCHEDULE:
No. DATE

REFERENCE PLAN

SHEET NUMBER:
C106

DUAL STORM PIPE NOTE

- ONLY ONE 24" BARREL WILL CONNECT TO MH-2. THE OTHER BARREL WILL RUN FROM MH-3 TO EW-1. (24" RCP CLASS 4 @ 0.5% MIN.)

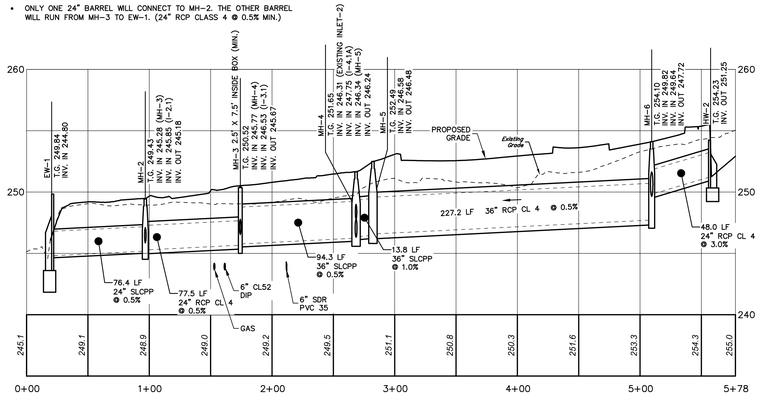

EW-1 TO HW-2

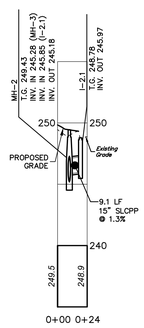

MH-2 TO I-2

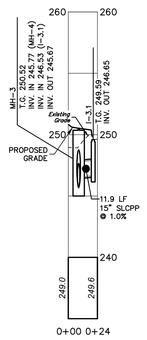

MH-3 TO I-3.1

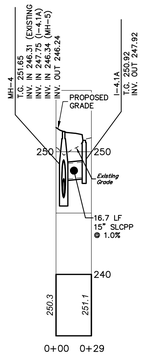

MH-4 TO I-4.1

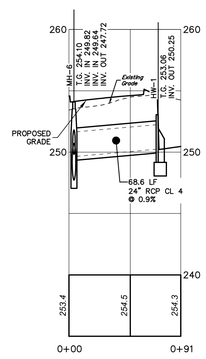

MH-6 TO HW-1

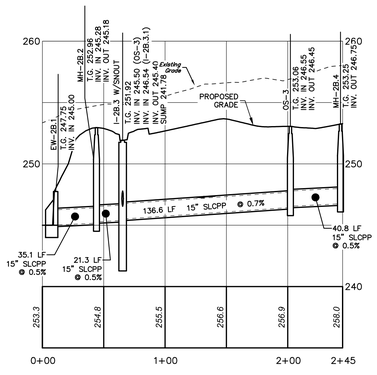

EW-2B.1 TO SCM-3

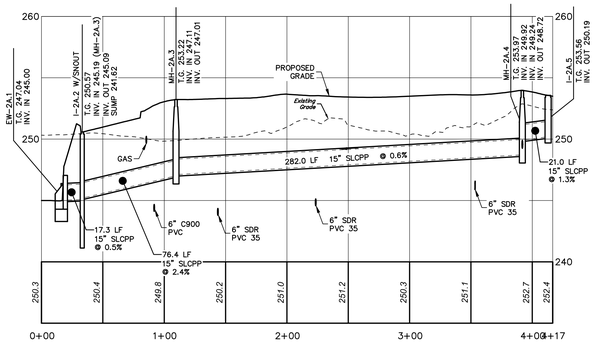

EW-2A.1 TO I-2A.5

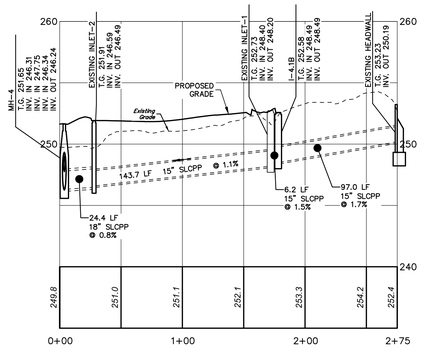

EXISTING RUN

HORIZ: 50' 25' 0' 50'
VERT: 10' 5' 0' 10'
SCALE IN FEET

HERBERT, ROWLAND & GRUBIC, INC.
1275 GLENLIVET DRIVE
SUITE 145
ALLENTOWN, PA 18106
610.351.0311 | hrg-inc.com

EROSION & SEDIMENT CONTROL PLAN FOR EMERGENCY SERVICES CENTER

EXETER TOWNSHIP
4975 DEMOSS ROAD
READING, PA 19606

EXETER TOWNSHIP, BERKS COUNTY, PENNSYLVANIA

PROFESSIONAL SEAL:

REVISIONS		
NO.	DATE	DESCRIPTION
1	2026.04.14	REV AS PER 04/09/2026 BCCD COMMENTS
2	2026.04.23	REV AS PER 04/21/2026 BCCD COMMENTS
3	2026.05.15	REV AS PER 5/11/2026 BCCD COMMENTS
4	2026.10.01	FIELD CHANGE/BID SET
5		
6		
7		
8		
9		

HRG PROJECT NUMBER: R006367.0427
PLAN DATE: 04/01/2026
DRAWING SCALE: AS SHOWN
PROJ. MANAGER: DENNIS REICHEL

SHEET TITLE:
STORM PROFILES

SHEET: **PR-1** | **07**

© 2026 MWS, INC. C:\USERS\MWS_ADMIN\DROPBOX (MWS)\CLIENTS\HRG\EXETER TWP - EMS\PLOTS\STORM PROFILES.DWG 10/1/2026 10:11:49 AM EDT

MW STUDIOS
ARCHITECTURE + MASTER PLANNING
8098 SANDPIPER CIR, SUITE
NOTTINGHAM, MD 21236
☎ 410-344-1460
✉ INFO@MWSARCH.COM
WWW.MWSARCH.COM

CONSULTANT:

HERBERT, ROWLAND & GRUBIC, INC.
1275 GLENLIVET DRIVE
SUITE 145
ALLENTOWN, PA 18106
610.351.0311 | hrg-inc.com

SEAL:

COMMONWEALTH OF PENNSYLVANIA
REGISTERED PROFESSIONAL
DENNIS J REICHEL
ENGINEER
NO PE070761
10/01/2026

EXETER TOWNSHIP
EMERGENCY SERVICES FACILITY
70 GIBRALTER ROAD
READING, PA 19606

PROJECT NUMBER:
25-049

SUBMISSION:
BID SET

ORIGINAL ISSUE DATE:
10/01/2026

SHEET REVISION SCHEDULE:
No. DATE

REFERENCE PLAN

SHEET NUMBER:
C107

ALL DRAWINGS ARE PROTECTED BY FEDERAL COPYRIGHT BY MANNS WOODWARD STUDIOS, INC. AND CAN NOT BE REPRODUCED OR MODIFIED IN ANY MANNER WITHOUT WRITTEN PERMISSION. DOCUMENTS MAY NOT BE USED IN PART OR WHOLE TO DEVELOP THE DESIGN OF ANOTHER BUILDING WITHOUT EXPRESS WRITTEN PERMISSION BY MANNS WOODWARD STUDIOS.

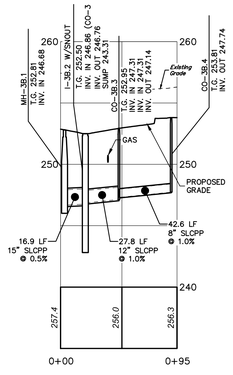

SCM-3 TO CO-3B.4

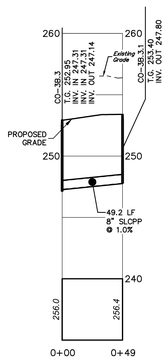

I-3B.3 TO CO-3B.3.1

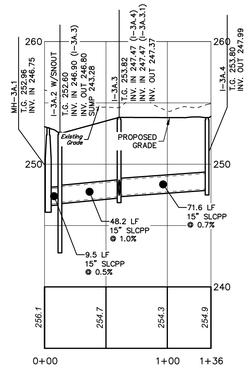

SCM-3 TO I-3A.4

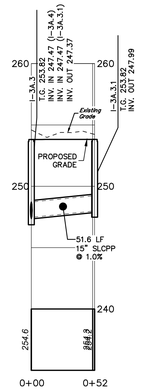

I-3A.3 TO I-3A.3.1

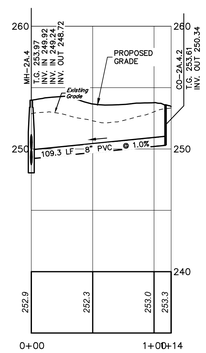

MH-2A.4 TO CO-2A-4.2

HORIZ: 50' 25' 0' 50'
VERT: 10' 5' 0' 10'
SCALE IN FEET

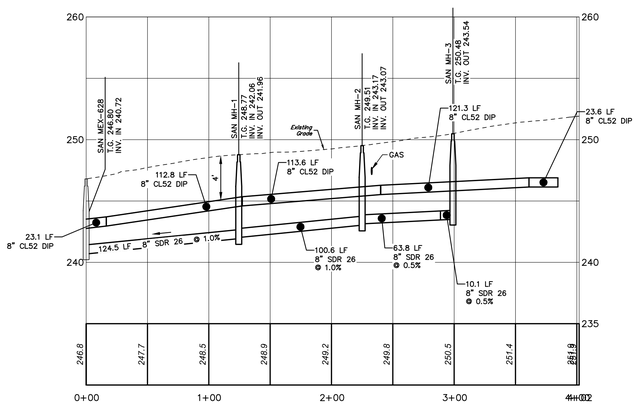

GIBRALTAR ROAD

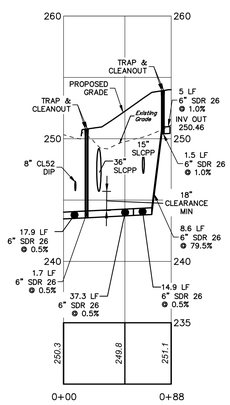

LATERAL TO OFFICE

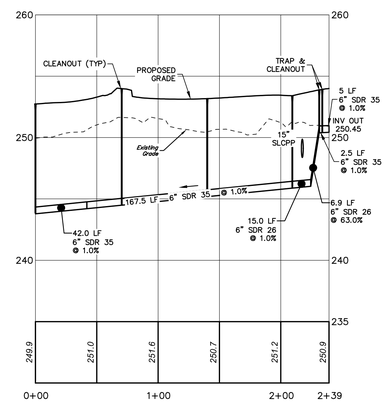

LATERAL TO EMS

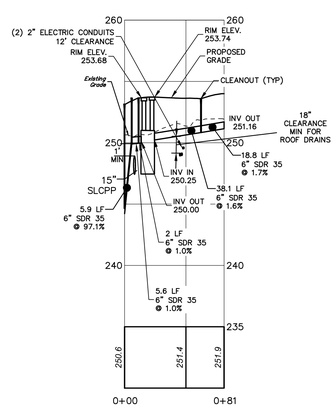

LATERAL TO APPARATUS BAY

HERBERT, ROWLAND & GRUBIC, INC.
1275 GLENLIVET DRIVE
SUITE 145
ALLENTOWN, PA 18106
610.351.0311 | hrg-inc.com

EROSION & SEDIMENT CONTROL PLAN FOR EMERGENCY SERVICES CENTER

EXETER TOWNSHIP
4975 DEMOSS ROAD
READING, PA 19606

EXETER TOWNSHIP, BERKS COUNTY, PENNSYLVANIA

PROFESSIONAL SEAL:

HRG PROJECT NUMBER:	R006367.0427
PLAN DATE:	04/01/2026
DRAWING SCALE:	AS SHOWN
PROJ. MANAGER:	DENNIS REICHEL

REVISIONS

NO	DATE	DESCRIPTION
1	2026.04.14	REV AS PER 04/09/2026 BCCD COMMENTS
2	2026.04.23	REV AS PER 04/17/2026 BCCD COMMENTS
3	2026.05.15	REV AS PER 5/11/2026 BCCD COMMENTS
4	2026.10.01	FIELD CHANGE/BID SET
5		
6		
7		
8		
9		

SHEET TITLE:
STORM AND SANITARY PROFILES

SHEET: PR-2 | 08

MW STUDIOS
ARCHITECTURE + MASTER PLANNING
8098 SANDPIPER CIR, SUITE
NOTTINGHAM, MD 21236
☎ 410-344-1460
✉ INFO@MWSARCH.COM
WWW.MWSARCH.COM

CONSULTANT:

HERBERT, ROWLAND & GRUBIC, INC.
1275 GLENLIVET DRIVE
SUITE 145
ALLENTOWN, PA 18106
610.351.0311 | hrg-inc.com

SEAL:

COMMONWEALTH OF PENNSYLVANIA
REGISTERED PROFESSIONAL
DENNIS J. REICHEL
ENGINEER NO. PE070787
10/01/2026

EXETER TOWNSHIP
EMERGENCY SERVICES FACILITY
70 GIBRALTER ROAD
READING, PA 19606

PROJECT NUMBER:
25-049

SUBMISSION:
BID SET

ORIGINAL ISSUE DATE:
10/01/2026

SHEET REVISION SCHEDULE:
No. DATE

REFERENCE PLAN

SHEET NUMBER:

C108

ALL DRAWINGS ARE PROTECTED BY FEDERAL COPYRIGHT BY MANNS WOODWARD STUDIOS, INC. AND CAN NOT BE REPRODUCED OR MODIFIED IN ANY MANNER WITHOUT WRITTEN PERMISSION. DOCUMENTS MAY NOT BE USED IN PART OR WHOLE TO DEVELOP THE DESIGN OF ANOTHER BUILDING WITHOUT EXPRESS WRITTEN PERMISSION BY MANNS WOODWARD STUDIOS.

TABLE 4.1
COMPOST SOCK FABRIC MINIMUM SPECIFICATIONS

MATERIAL TYPE	MULTI–FILAMENT POLYPROPYLENE (MFPP)	
MATERIAL CHARACTERISTICS	PHOTO–DEGRADABLE	
SOCK DIAMETERS	12" 18" 24" 32"	
MESH OPENING	3/8"	
TENSILE STRENGTH	44 PSI	
ULTRAVIOLET STABILITY % ORIGINAL STRENGTH (ASTM G–155)	100% @ 1000 HRS	
MINIMUM FUNCTIONAL LONGEVITY	1 YEAR	
TWO–PLY SYSTEMS		
INNER CONTAINMENT NETTING		HDPE BIAXIAL NET
		CONTINUOUSLY WOUND
		FUSION–WELDED JUNCTURES
		3/4"x3/4" MAX. APERTURE SIZE
OUTER FILTRATION MESH		COMPOSITE POLYPROPYLENE FABRIC (WOVEN LAYER AND NON–WOVEN FLEECE MECHANICALLY FUSED VIA NEEDLE PUNCH)
		3/16" MAX. APERTURE SIZE
SOCK FABRICS COMPOSED OF BURLAP MAY BE USED ON PROJECTS LASTING 6 MONTHS OR LESS.		

TABLE 4.2
COMPOST STANDARDS

ORGANIC MATTER CONTENT	25% – 100% (DRY WEIGHT BASIS)
ORGANIC PORTION	FIBROUS AND ELONGATED
pH	5.5 – 8.5
MOISTURE CONTENT	30% – 60%
PARTICLE SIZE	30% – 50% PASS THROUGH 3/8" SIEVE
SOLUBLE SALT CONCENTRATION	5.0 dS/m (mmhos/cm) MAX.

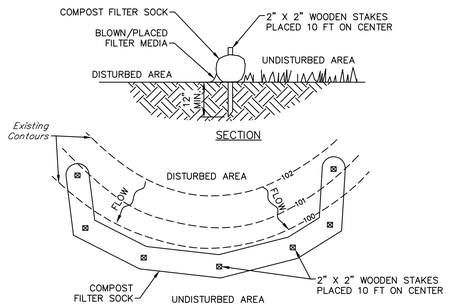

NOTES:

1. SOCK FABRIC SHALL MEET STANDARDS OF TABLE 4.1 OF THE PA DEP EROSION CONTROL MANUAL. COMPOST SHALL MEET THE STANDARDS OF TABLE 4.2 OF THE PA DEP EROSION CONTROL MANUAL.
2. COMPOST FILTER SOCK SHALL BE PLACED AT EXISTING LEVEL GRADE. BOTH ENDS OF THE SOCK SHALL BE EXTENDED AT LEAST 8 FEET UP SLOPE AT 45 DEGREES TO THE MAIN SOCK ALIGNMENT. MAXIMUM SLOPE LENGTH ABOVE ANY SOCK SHALL NOT EXCEED THAT SHOWN ON FIGURE 4.2. STAKES MAY BE INSTALLED IMMEDIATELY DOWNSLOPE OF THE SOCK IF SO SPECIFIED BY THE MANUFACTURE.
3. TRAFFIC SHALL NOT BE PERMITTED TO CROSS COMPOST FILTER SOCKS.
4. ACCUMULATED SEDIMENT SHALL BE REMOVED WHEN IT REACHES 1/2 THE ABOVE GROUND HEIGHT OF THE SOCK AND DISPOSED IN THE MANNER DESCRIBED ELSEWHERE IN THE PLAN.
5. SOCKS SHALL BE INSPECTED WEEKLY AND AFTER EACH RUNOFF EVENT. DAMAGED SOCKS SHALL BE REPAIRED ACCORDING TO MANUFACTURER'S SPECIFICATIONS OR REPLACED WITHIN 24 HOURS OF INSPECTION.
6. BIODEGRADABLE FILTER SOCKS SHALL BE REPLACED AFTER 6 MONTHS; PHOTODEGRADABLE SOCKS AFTER 1 YEAR. POLYPROPYLENE SOCKS SHALL BE REPLACED ACCORDING TO MANUFACTURER'S RECOMMENDATIONS.
7. UPON STABILIZATION OF THE AREA TRIBUTARY TO THE SOCK, STAKES SHALL BE REMOVED. THE SOCK MAY BE LEFT IN PLACE AND VEGETATED OR REMOVED. IN THE LATTER CASE, THE MESH SHALL BE CUT OPEN AND THE MULCH SPREAD AS A SOIL SUPPLEMENT.

STANDARD CONSTRUCTION DETAIL #4-1
COMPOST FILTER SOCK

NOT TO SCALE

TABLE 11.1
Cubic Yards of Topsoil Required for Application to Various Depths

Depth (in)	Per 1,000 Square Feet	Per Acre
1	3.1	134
2	6.2	268
3	9.3	403
4	12.4	537
5	15.5	672
6	18.6	806
7	21.7	940
8	24.8	1,074

Adapted from VA DSWC

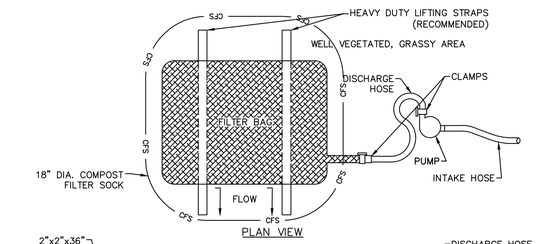

NOTES:

1. LOW VOLUME FILTER BAGS SHALL BE MADE FROM NON–WOVEN GEOTEXTILE MATERIAL SEWN WITH HIGH STRENGTH, DOUBLE STITCHED "J" TYPE SEAMS. THEY SHALL BE CAPABLE OF TRAPPING PARTICLES LARGER THAN 150 MICRONS. HIGH VOLUME FILTER BAGS SHALL BE MADE FROM WOVEN GEOTEXTILES THAT MEET THE FOLLOWING STANDARDS:

PROPERTY	TEST METHOD	MINIMUM STANDARD
AVG. WIDE WIDTH STRENGTH	ASTM D–4884	60 LB/IN
GRAB TENSILE	ASTM D–4632	205 LB
PUNCTURE	ASTM D–4833	110 LB
MULLEN BURST	ASTM D–3786	350 PSI
UV RESISTANCE	ASTM D–4355	70%
AOS % RETAINED	ASTM D–4751	80 SIEVE

2. A SUITABLE MEANS OF ACCESSING THE BAG WITH MACHINERY REQUIRED FOR DISPOSAL PURPOSES SHALL BE PROVIDED. FILTER BAGS SHALL BE REPLACED WHEN THEY BECOME 1/2 FULL OF SEDIMENT. SPARE BAGS SHALL BE KEPT AVAILABLE FOR REPLACEMENT OF THOSE THAT HAVE FAILED OR ARE FILLED. BAGS SHALL BE PLACED ON STRAPS TO FACILITATE REMOVAL UNLESS BAGS COME WITH LIFTING STRAPS ALREADY ATTACHED.
3. BAGS SHALL BE LOCATED IN WELL–VEGETATED (GRASSY) AREA, AND DISCHARGE ONTO STABLE, EROSION RESISTANT AREAS. WHERE THIS IS NOT POSSIBLE, A GEOTEXTILE UNDERLAYMENT AND FLOW PATH SHALL BE PROVIDED. BAGS MAY BE PLACED ON FILTER STONE TO INCREASE DISCHARGE CAPACITY. BAGS SHALL NOT BE PLACED ON SLOPES GREATER THAN 5% FOR SLOPES EXCEEDING 5%, CLEAN ROCK OR OTHER NON–ERODIBLE AND NON–POLLUTING MATERIAL MAY BE PLACED UNDER THE BAG TO REDUCE SLOPE STEEPNESS.
4. COMPOST FILTER SOCK SHALL BE INSTALLED AROUND ALL BAGS.
5. THE PUMP DISCHARGE HOSE SHALL BE INSERTED INTO THE BAGS IN THE MANNER SPECIFIED BY THE MANUFACTURER AND SECURELY CLAMPED. A PIECE OF PVC PIPE IS RECOMMENDED FOR THIS PURPOSE.
6. THE PUMPING RATE SHALL BE NO GREATER THAN 750 GPM OR 1/2 THE MAXIMUM SPECIFIED BY THE MANUFACTURER, WHICHEVER IS LESS. PUMP INTAKES SHALL BE FLOATING AND SCREENED.
7. FILTER BAGS SHALL BE INSPECTED DAILY. IF ANY PROBLEM IS DETECTED, PUMPING SHALL CEASE IMMEDIATELY AND NOT RESUME UNTIL THE PROBLEM IS CORRECTED.

STANDARD CONSTRUCTION DETAIL #3-16
PUMPED WATER FILTER BAG

NOT TO SCALE

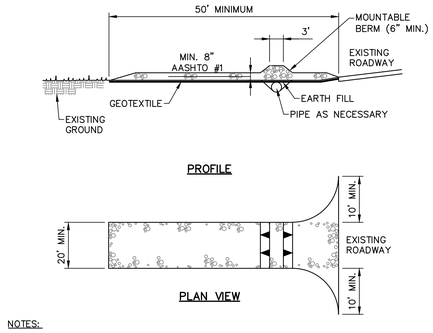

NOTES:

1. REMOVE TOPSOIL PRIOR TO INSTALLATION OF ROCK CONSTRUCTION ENTRANCE. EXTEND ROCK OVER FULL WIDTH OF ENTRANCE.
2. RUNOFF SHALL BE DIVERTED FROM ROADWAY TO A SUITABLE SEDIMENT REMOVAL BMP PRIOR TO ENTERING ROCK CONSTRUCTION ENTRANCE.
3. MOUNTABLE BERM SHALL BE INSTALLED WHEREVER OPTIONAL CULVERT PIPE IS USED AND PROPER PIPE COVER AS SPECIFIED BY THE MANUFACTURER IS NOT OTHERWISE PROVIDED. PIPE SHALL BE SIZED APPROPRIATELY FOR SIZE OF DITCH BEING CROSSED.
4. MAINTENANCE: ROCK CONSTRUCTION ENTRANCE THICKNESS SHALL BE CONSTANTLY MAINTAINED TO THE SPECIFIED DIMENSIONS BY ADDING ROCK. A STOCKPILE SHALL BE MAINTAINED ON SITE FOR THIS PURPOSE. ALL SEDIMENT DEPOSITED ON PAVED ROADWAYS SHALL BE REMOVED AND RETURNED TO THE CONSTRUCTION SITE IMMEDIATELY. IF EXCESSIVE AMOUNTS OF SEDIMENT ARE BEING DEPOSITED ON ROADWAY, EXTEND LENGTH OF ROCK CONSTRUCTION ENTRANCE BY 50' INCREMENTS UNTIL CONDITION IS ALLEVIATED OR INSTALL A WASH RACK. WASHING THE ROADWAY OR SWEEPING THE DEPOSITS INTO ROADWAY DITCHES, SEWERS, CULVERTS, OR OTHER DRAINAGE COURSES IS NOT ACCEPTABLE.

STANDARD CONSTRUCTION DETAIL #3-1
ROCK CONSTRUCTION ENTRANCE

NOT TO SCALE

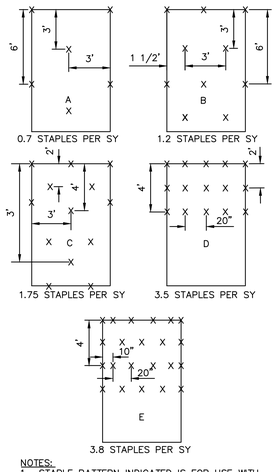

NOTES:

1. STAPLE PATTERN INDICATED IS FOR USE WITH SPECIFIED MATTING ONLY. CONSULT MANUFACTURER FOR PATTERN SHOULD AN ALTERNATE MATTING BE USED.
2. INCREASED STAPLE RATES MAY BE NECESSARY DEPENDING UPON SITE CONDITIONS. CONSULT MANUFACTURER FOR SPECIFIC RECOMMENDATIONS.

STAPLE PATTERN GUIDE

NOT TO SCALE

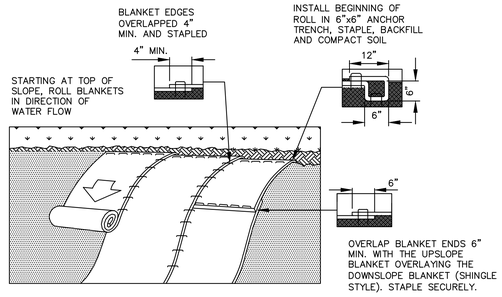

NOTES:

1. REFER TO MANUFACTURER'S RECOMMENDED INSTALLATION INSTRUCTIONS AND STAPLING PATTERN FOR STEEPNESS AND LENGTH OF SLOPE BEING BLANKETED.
2. PREPARE SEED BED (INCLUDING APPLICATION OF LIME, FERTILIZER, AND SEED) PRIOR TO INSTALLATION OF BLANKET.
3. SEED AND SOIL AMENDMENTS SHALL BE APPLIED ACCORDING TO THE RATES IN THE PLAN DRAWINGS PRIOR TO INSTALLING THE BLANKET.
4. PROVIDE ANCHOR TRENCH AT TOE OF SLOPE IN SIMILAR FASHION AS AT TOP OF SLOPE.
5. SLOPE SURFACE SHALL BE FREE OF ROCKS, CLODS, STICKS, AND GRASS.
6. BLANKET SHALL HAVE GOOD CONTINUOUS CONTACT WITH UNDERLYING SOIL THROUGHOUT ENTIRE LENGTH. LAY BLANKET LOOSELY AND STAKE OR STAPLE TO MAINTAIN DIRECT CONTACT WITH SOIL. DO NOT STRETCH BLANKET.
7. BLANKETED AREAS SHALL BE INSPECTED WEEKLY AND AFTER EACH RUNOFF EVENT UNTIL PERENNIAL VEGETATION IS ESTABLISHED TO A MINIMUM UNIFORM 70% COVERAGE THROUGHOUT THE BLANKETED AREA. DAMAGED OR DISPLACED BLANKETS SHALL BE RESTORED OR REPLACED WITHIN 5 CALENDAR DAYS.

EROSION CONTROL BLANKET SLOPE INSTALLATION

NOT TO SCALE

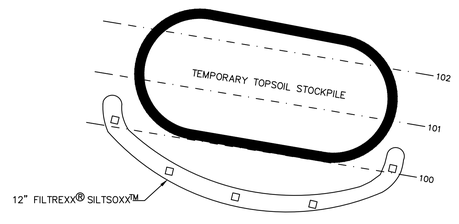

NOTES:

1. THE TOPSOIL STOCKPILE SHALL NOT EXCEED 35–FEET IN HEIGHT WITH SIDE SLOPES OF 2:1 OR FLATTER. SILTSOXX SHALL BE PLACED ON THE DOWN–SLOPE SIDE(S) IMMEDIATELY UPON THE INITIATION OF STORAGE. UPON COMPLETION OF CONSTRUCTION, THE TOPSOIL SHALL BE GRADED TO A SAFE CONFIGURATION AND PERMANENTLY SEEDED AND MULCHED.
2. IF TOPSOIL MUST BE REMOVED FROM THE PROJECT SITE, THE CONTRACTOR MUST CONTACT THE CONSERVATION DISTRICT WITHIN THE COUNTY THEY PLAN TO WASTE OR STOCKPILE EXCAVATED MATERIAL IN ORDER TO ENSURE THAT AN APPROVED E&S PLAN IS IN PLACE.
3. THE TEMPORARY TOPSOIL STICKPILE SHALL BE IMMEDIATELY SEEDED AS PER TEMPORARY SEEDING SCHEDULE.

TEMPORARY TOPSOIL STOCKPILE

NOT TO SCALE

HERBERT, ROWLAND & GRUBIC, INC.
1275 GLENLIVET DRIVE
SUITE 145
ALLENTOWN, PA 18106
610.351.0311 | hrg-inc.com

EROSION & SEDIMENT CONTROL PLAN FOR EMERGENCY SERVICES CENTER

EXETER TOWNSHIP
4975 DEMOSS ROAD
READING, PA 19606

EXETER TOWNSHIP, BERKS COUNTY, PENNSYLVANIA

HERBERT, ROWLAND & GRUBIC, INC.
1275 GLENLIVET DRIVE
SUITE 145
ALLENTOWN, PA 18106
610.351.0311 | hrg-inc.com

PROFESSIONAL SEAL:

HRG PROJECT NUMBER:	R006367.0427
PLAN DATE:	04/01/2026
DRAWING SCALE:	AS SHOWN
PROJ. MANAGER:	DENNIS REICHEL

NO.	DATE	DESCRIPTION
1	2026.04.14	REV AS PER 04/09/2026 BCCD COMMENTS
2	2026.04.23	REV AS PER 04/17/2026 BCCD COMMENTS
3	2026.05.15	REV AS PER 5/11/2026 BCCD COMMENTS
4	2026.10.01	FIELD CHANGE/BID SET
5		
6		
7		
8		
9		

REVISIONS

SHEET TITLE:
DETAILS

SHEET: **DT-1** | **09**

MW STUDIOS
ARCHITECTURE + MASTER PLANNING
8098 SANDPIPER CIR, SUITE
NOTTINGHAM, MD 21236
☎ 410–344–1460
✉ INFO@MWSARCH.COM
WWW.MWSARCH.COM

CONSULTANT:

HERBERT, ROWLAND & GRUBIC, INC.
1275 GLENLIVET DRIVE
SUITE 145
ALLENTOWN, PA 18106
610.351.0311 | hrg-inc.com

SEAL:

COMMONWEALTH OF PENNSYLVANIA
REGISTERED PROFESSIONAL
DENNIS J. REICHEL
ENGINEER NO. PE070797
10/01/2026

EXETER TOWNSHIP
EMERGENCY SERVICES FACILITY
70 GIBRALTER ROAD
READING, PA 19606

PROJECT NUMBER: 25-049

SUBMISSION: BID SET

ORIGINAL ISSUE DATE: 10/01/2026

SHEET REVISION SCHEDULE:
No. DATE

REFERENCE PLAN

SHEET NUMBER:
C109

ALL DRAWINGS ARE PROTECTED BY FEDERAL COPYRIGHT BY MANNS WOODWARD STUDIOS, INC. AND CAN NOT BE REPRODUCED OR MODIFIED IN ANY MANNER WITHOUT WRITTEN PERMISSION. DOCUMENTS MAY NOT BE USED IN PART OR WHOLE TO DEVELOP THE DESIGN OF ANOTHER BUILDING WITHOUT EXPRESS WRITTEN PERMISSION BY MANNS WOODWARD STUDIOS.

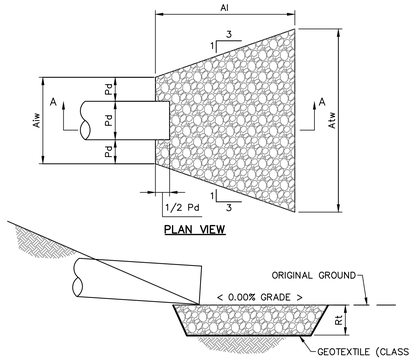

PLAN VIEW

SECTION A–A

OUTLET NO.	PIPE DIA Pd (IN)	RIPRAP SIZE R–	RIPRAP THICK. Rt (IN)	APRON LENGTH Al (FT)	APRON INITIAL WIDTH Aiw (FT)	APRON TERMINAL WIDTH Atw (FT)
EW–1	24 x 2	4	18	12	12	22.5
EW–2A.1	15	4	18	10	4	12
EW–2B.1	15	4	18	10	4	12

NOTES:

ALL APRONS SHALL BE CONSTRUCTED TO THE DIMENSIONS SHOWN. TERMINAL WIDTHS SHALL BE ADJUSTED AS NECESSARY TO MATCH RECEIVING CHANNELS.

ALL APRONS SHALL BE INSPECTED AT LEAST WEEKLY AND AFTER EACH RUNOFF EVENT. DISPLACED RIPRAP WITHIN THE APRON SHALL BE REPLACED IMMEDIATELY.

EXTEND RIPRAP ON BACK SIDE OF APRON TO AT LEAST 1/2 DEPTH OF PIPE ON BOTH SIDES TO PREVENT SCOUR AROUND THE PIPE.

STANDARD CONSTRUCTION DETAIL #9-2
RIPRAP APRON AT PIPE OUTLET
NO FLARED ENDWALL

NOT TO SCALE

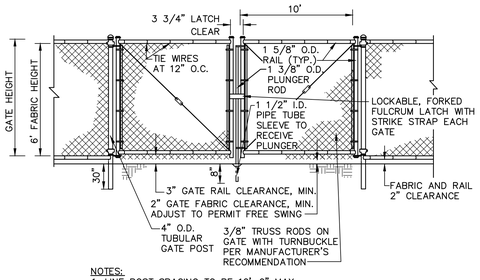

NOTES:
1. LINE POST SPACING TO BE 10'–0" MAX.
2. PROVIDE GATES AT LOCATIONS SHOWN ON THE PLAN.
3. PROVIDE GATE KEEPER FOR EACH GATE FOR SECURING GATE IN FULL OPEN POSITION.
4. PROVIDE PLUNGER KEEPER TO KEEP PLUNGER ROD IN UP POSITION DURING OPENING OF THE GATE.
5. FABRIC TO BE ZINC/5% ALUMINUM/MISCHMETAL ALLOY – COATED STEEL CORE WIRE, 9 GAGE, HELICALLY WOVEN AS DIAMOND MESH KNUCKLED AT EDGES
6. POSTS AND RAILS TO BE SCHEDULE 40 HOT–DIPPED BLACK COATED STEEL, ALL JOINTS WELDED.

TEMPORARY CHAINLINK DOUBLE-LEAF SWING GATE DETAIL

NOT TO SCALE

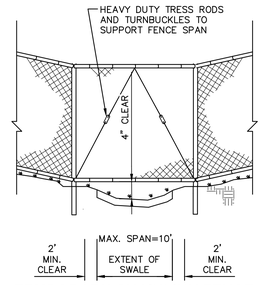

TEMPORARY CHAINLINK FENCE AT SWALE CROSSINGS

NOT TO SCALE

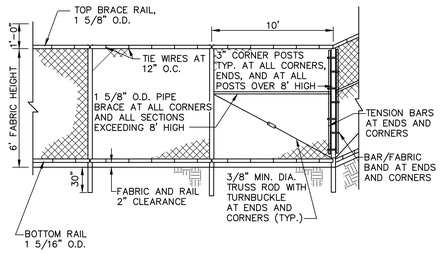

NOTES:
1. LINE POST SPACING TO BE 10'–0" MAX.
2. ADD ADDITIONAL BRACE AND TRUSS AND OTHER ACCESSORIES/ HARDWARE FOR CORNER AND END SECTIONS OF FENCE EXCEEDING 8' HEIGHT AS RECOMMENDED BY THE MANUFACTURER.
3. FABRIC TO BE ZINC/5% ALUMINUM/MISCHMETAL ALLOY – COATED STEEL CORE WIRE, 9 GAGE, HELICALLY WOVEN AS DIAMOND MESH KNUCKLED AT EDGES
4. POSTS AND RAILS TO BE SCHEDULE 40 HOT–DIPPED GALVANIZED STEEL, ALL JOINTS WELDED.

TEMPORARY CHAINLINK FENCE DETAIL

NOT TO SCALE

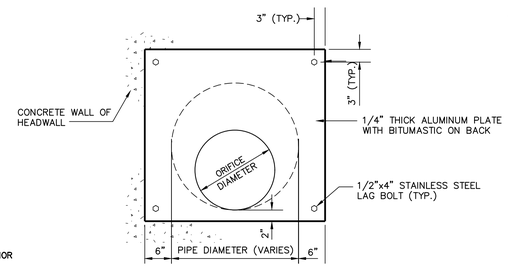

EXISTING HEADWALL ORIFICE PLATE DETAIL (SCM-1)

NOT TO SCALE

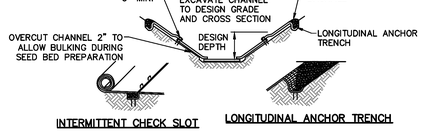

INTERMITTENT CHECK SLOT

LONGITUDINAL ANCHOR TRENCH



ISOMETRIC VIEW

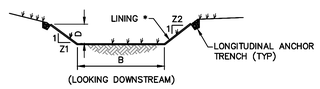

CHANNEL CROSS–SECTION

* SEE MANUFACTURER'S LINING INSTALLATION DETAIL FOR STAPLE PATTERNS, VEGETATIVE STABILIZATION SPECIFICATIONS FOR SOIL AMENDMENTS, SEED MIXTURES AND MULCHING INFORMATION

CHANNEL NO.	SLOPE/ STATIONS	BOTTOM WIDTH B (FT)	DEPTH D (FT)	TOP WIDTH W (FT)	Z1 (FT)	Z2 (FT)	LINING *
1A	1.50%/6.90%	3	1.1	9.6	3	3	S75/VEG
1B	1.50%	4	1.5	13	3	3	S75/VEG
2	8.46%	4	1	10	3	3	S200/VEG

NOTES:

1. ANCHOR TRENCHES SHALL BE INSTALLED AT BEGINNING AND END OF CHANNEL IN THE SAME MANNER AS LONGITUDINAL ANCHOR TRENCHES.
2. CHANNEL DIMENSIONS SHALL BE CONSTANTLY MAINTAINED. CHANNEL SHALL BE CLEANED WHENEVER TOTAL CHANNEL DEPTH IS REDUCED BY 25% AT ANY LOCATION. SEDIMENT DEPOSITS SHALL BE REMOVED WITHIN 24 HOURS OF DISCOVERY OR AS SOON AS SOIL CONDITIONS PERMIT ACCESS TO CHANNEL WITHOUT FURTHER DAMAGE. DAMAGED LINING SHALL BE REPAIRED OR REPLACED WITHIN 48 HOURS OF DISCOVERY.
3. NO MORE THAN ONE THIRD OF THE SHOOT (GRASS LEAF) SHALL BE REMOVED IN ANY MOWING. GRASS HEIGHT SHALL BE MAINTAINED BETWEEN 2 AND 3 INCHES UNLESS OTHERWISE SPECIFIED. EXCESS VEGETATION SHALL BE REMOVED FROM PERMANENT CHANNELS TO ENSURE SUFFICIENT CHANNEL CAPACITY.

STANDARD CONSTRUCTION DETAIL #6-1
VEGETATED CHANNEL

NOT TO SCALE

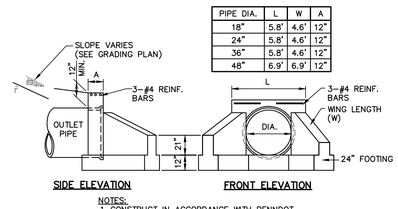

PIPE DIA.	L	W	A
18"	5.8'	4.6'	12"
24"	5.8'	4.6'	12"
36"	5.8'	4.6'	12"
48"	6.9'	6.9'	12"

SIDE ELEVATION FRONT ELEVATION

NOTES:
1. CONSTRUCT IN ACCORDANCE WITH PENNDOT PUBLICATION 72 RC–31
2. FOR PIPE SIZES LESS THAN 36" CONSTRUCT WING WALL TO DIMENSIONS FOR 36" PIPE DIAMETER AS LISTED IN PENNDOT RC–31.

TYPE D-W ENDWALL DETAIL

NOT TO SCALE

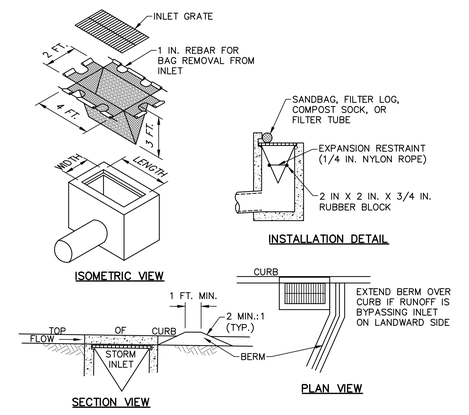

ISOMETRIC VIEW INSTALLATION DETAIL

SECTION VIEW PLAN VIEW

NOTES:

1. MAXIMUM DRAINAGE AREA = 1/2 ACRE.
2. INLET PROTECTION SHALL NOT BE REQUIRED FOR INLET TRIBUTARY TO SEDIMENT BASIN OR TRAP. BERMS SHALL BE REQUIRED FOR ALL INSTALLATIONS.
3. ROLLED EARTHEN BERM SHALL BE MAINTAINED UNTIL ROADWAY IS STONED. ROAD SUBBASE BERM SHALL BE MAINTAINED UNTIL ROADWAY IS PAVED. SIX INCH MINIMUM HEIGHT ASPHALT BERM SHALL BE MAINTAINED UNTIL ROADWAY SURFACE RECEIVES FINAL COAT.
4. AT A MINIMUM, THE FABRIC SHALL HAVE A MINIMUM GRAB TENSILE STRENGTH OF 120 LBS, A MINIMUM BURST STRENGTH OF 200 PSI, AND A MINIMUM TRAPEZOIDAL TEAR STRENGTH OF 50 LBS. FILTER BAGS SHALL BE CAPABLE OF TRAPPING ALL PARTICLES NOT PASSING A NO. 40 SIEVE.
5. INLET FILTER BAGS SHALL BE INSPECTED ON A WEEKLY BASIS AND AFTER EACH RUNOFF EVENT. BAGS SHALL BE EMPTIED AND RINSED OR REPLACED WHEN HALF FULL OR WHEN FLOW CAPACITY HAS BEEN REDUCED SO AS TO CAUSE FLOODING OR BYPASSING OF THE INLET. DAMAGED OR CLOGGED BAGS SHALL BE REPLACED. A SUPPLY SHALL BE MAINTAINED ON SITE FOR REPLACEMENT OF BAGS. ALL NEEDED REPAIRS SHALL BE INITIATED IMMEDIATELY AFTER THE INSPECTION. DISPOSE OF ACCUMULATED SEDIMENT AS WELL AS ALL USED BAGS ACCORDING TO THE PLAN NOTES.
6. DO NOT USE ON MAJOR PAVED ROADWAYS WHERE PONDING MAY CAUSE TRAFFIC HAZARDS.

STANDARD CONSTRUCTION DETAIL #4-15
FILTER BAG INLET PROTECTION - TYPE C INLET

NOT TO SCALE

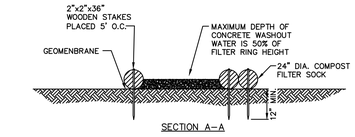

SECTION A–A

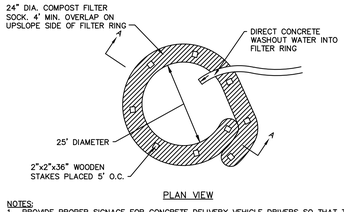

PLAN VIEW

NOTES:
1. PROVIDE PROPER SIGNAGE FOR CONCRETE DELIVERY VEHICLE DRIVERS SO THAT THEY ARE AWARE OF THE PRESENCE OF WASHOUT FACILITIES.
2. WASHOUT FACILITIES SHOULD NOT BE PLACED WITHIN 50' OF STORM DRAINS, OPEN DITCHES, OR SURFACE WATERS. UNDER NO CIRCUMSTANCES SHOULD WASH WATER BE ALLOWED TO ENTER ANY SURFACE WATERS.
3. WHEREVER POSSIBLE, CONCRETE WASHOUTS SHOULD BE LOCATED ON SLOPES NOT EXCEEDING A 2% GRADE.
4. A SUITABLE IMPERVIOUS GEOMEMBRANE SHOULD BE PLACED AT THE LOCATION OF THE WASHOUT. COMPOST SOCKS SHOULD BE STAKED IN THE MANNER RECOMMENDED BY THE MANUFACTURER AROUND PERIMETER OF THE GEOMEMBRANE SO AS TO FORM A RING WITHIN THE ENDS OF THE SOCK LOCATED AT THE UPSLOPE CORNER. CARE MUST BE TAKEN TO ENSURE CONTINUOUS CONTACT OF THE SOCK WITH THE GEOMEMBRANE AT ALL LOCATIONS. WHERE NECESSARY, 18" SOCKS MAY BE STACKED ONTO 24" SOCKS AND STAKED SO AS TO FORM A TRIANGULAR CROSS SECTION.
5. ALL CONCRETE WASHOUT FACILITIES SHOULD BE INSPECTED DAILY. DAMAGED OR LEAKING WASHOUT SHOULD BE DEACTIVATED AND REPAIRED OR REPLACED IMMEDIATELY. ACCUMULATED MATERIALS SHOULD BE REMOVED WHEN THEY REACH 75% CAPACITY. PLASTIC LINERS SHOULD BE REPLACED WITH EACH CLEANING OF THE WASHOUT FACILITY.

TYPICAL COMPOST SOCK WASHOUT INSTALLATION

NOT TO SCALE

MANNS WOODWARD STUDIOS
ARCHITECTURE + MASTER PLANNING
8098 SANDPIPER CIR, SUITE
NOTTINGHAM, MD 21236
☎ 410–344–1460
✉ INFO@MWSARCH.COM
WWW.MWSARCH.COM

CONSULTANT:

HERBERT, ROWLAND & GRUBIC, INC.
1275 GLENLIVET DRIVE
SUITE 145
ALLENTOWN, PA 18106
610.351.0311 | hrg-inc.com

SEAL:

COMMONWEALTH OF PENNSYLVANIA
REGISTERED PROFESSIONAL
DENNIS J. REICHEL
ENGINEER
PE070767
10/01/2026

HERBERT, ROWLAND & GRUBIC, INC.
1275 GLENLIVET DRIVE
SUITE 145
ALLENTOWN, PA 18106
610.351.0311 | hrg-inc.com

EROSION & SEDIMENT CONTROL PLAN
FOR
EMERGENCY SERVICES CENTER
EXETER TOWNSHIP
4975 DEMOSS ROAD
READING, PA 19606
EXETER TOWNSHIP, BERKS COUNTY, PENNSYLVANIA

PROFESSIONAL SEAL:

HRG PROJECT NUMBER: R006367.0427
PLAN DATE: 04/01/2026
DRAWING SCALE: AS SHOWN
PROJ. MANAGER: DENNIS REICHEL

REVISIONS

NO.	DATE	DESCRIPTION
1	2026.04.14	REV. AS PER 04/09/2026 BCCD COMMENTS
2	2026.04.23	REV. AS PER 04/17/2026 BCCD COMMENTS
3	2026.05.15	REV. AS PER 5/11/2026 BCCD COMMENTS
4	2026.10.01	FIELD CHANGE/BID SET
5		
6		
7		
8		
9		

SHEET TITLE:
DETAILS

SHEET: DT-2 10

EXETER TOWNSHIP
EMERGENCY SERVICES FACILITY
70 GIBRALTER ROAD
READING, PA 19606

PROJECT NUMBER: 25–049

SUBMISSION: BID SET

ORIGINAL ISSUE DATE: 10/01/2026

SHEET REVISION SCHEDULE:
No. DATE

REFERENCE PLAN

SHEET NUMBER:
C110

ALL DRAWINGS ARE PROTECTED BY FEDERAL COPYRIGHT BY MANNS WOODWARD STUDIOS, INC. AND CAN NOT BE REPRODUCED OR MODIFIED IN ANY MANNER WITHOUT WRITTEN PERMISSION. DOCUMENTS MAY NOT BE USED IN PART OR WHOLE TO DEVELOP THE DESIGN OF ANOTHER BUILDING WITHOUT EXPRESS WRITTEN PERMISSION BY MANNS WOODWARD STUDIOS.

POST CONSTRUCTION STORMWATER MANAGEMENT PLAN
FOR
EXETER TOWNSHIP - EMERGENCY SERVICES CENTER
EXETER TOWNSHIP, BERKS COUNTY, PENNSYLVANIA
APRIL 01, 2026

POST CONSTRUCTION STORMWATER MANAGEMENT STANDARD NOTES

PCSM REQUIREMENTS

A LICENSED PROFESSIONAL OR A DESIGNEE SHALL BE PRESENT ONSITE AND BE RESPONSIBLE DURING CRITICAL STAGES OF IMPLEMENTATION OF THE APPROVED PCSM PLAN. THE CRITICAL STAGES MAY INCLUDE THE INSTALLATION OF UNDERGROUND TREATMENT OR STORAGE BMPS, STRUCTURALLY ENGINEERED BMPS, OR OTHER BMPS AS DEEMED APPROPRIATE BY THE DEPARTMENT OR THE CONSERVATION DISTRICT. THE PCSM PLAN, INSPECTION REPORTS, AND MONITORING RECORDS SHALL BE AVAILABLE FOR REVIEW AND INSPECTION BY THE DEPARTMENT OR THE CONSERVATION DISTRICT.

THE PERMITTEE OR CO-PERMITTEE SHALL BE RESPONSIBLE FOR LONG-TERM OPERATION AND MAINTENANCE OF PCSM BMPS UNLESS A DIFFERENT PERSON IS IDENTIFIED IN THE NOTICE OF TERMINATION AND HAS AGREED TO LONG-TERM OPERATION AND MAINTENANCE OF PCSM BMPS. A PERMITTEE OR CO-PERMITTEE THAT FAILS TO TRANSFER LONG-TERM OPERATION AND MAINTENANCE OF THE PCSM BMP OR OTHERWISE FAILS TO COMPLY WITH THIS REQUIREMENT SHALL REMAIN JOINTLY AND SEVERALLY RESPONSIBLE WITH THE LANDOWNER FOR LONG-TERM OPERATION AND MAINTENANCE OF THE PCSM BMPS LOCATED ON THE PROPERTY.

THE PERMITTEE MUST CONDUCT VISUAL INSPECTIONS THROUGHOUT THE DURATION OF CONSTRUCTION AND UNTIL THE NOT HAS BEEN APPROVED. WEEKLY INSPECTIONS AND WITHIN24 HOURS AFTER THE END OF STORM EVENT IN THE AMOUNT OF 0.25 INCH OR GREATER OVER A 24-HOUR PERIOD OR THE OCCURRENCE OF SNOWMELT SUFFICIENT TO CAUSE A DISCHARGE. THE PERMITTEE MUST DOCUMENT EACH SITE INSPECTION ON DEP'S CHAPTER 102 VISUAL SITE INSPECTION REPORT (3800-FM-BCW0271D) OR ALTERNATIVE DOCUMENT OR ELECTRONIC FORM THAT COLLECTS AND RETAINS IDENTICAL INFORMATION. BEGINNING DECEMBER 8, 2025, QUALIFIED PERSONNEL MUST COMPLETE THE VISUAL SITE INSPECTION REPORTS. THE PERMITTEE MUST TAKE COLOR PHOTOGRAPHS (WITH A DATE AND TIME STAMP) OF E&S BMPS AND PCSM SOMS ON THE PROJECT SITE MONTHLY.

THE PERMITTEE MUST SUBMIT A COMPLETE ANNUAL REPORT TO THE DISTRICT BY DECEMBER 7 EACH YEAR USING DEPS ANNUAL REPORT TEMPLATE (3800-PM-BCW0405E). THE ANNUAL REPORT MUST ADDRESS ACTIVITIES UNDER THIS PERMIT FOR THE REPORTING PERIOD OF OCTOBER 1-SEPTEMBER 30.

PERMIT TERMINATION

UPON PERMANENT STABILIZATION OF THE EARTH DISTURBANCE ACTIVITY AND INSTALLATION OF BMPS IN ACCORDANCE WITH AN APPROVED PLAN, THE PERMITTEE OR CO-PERMITTEE SHALL SUBMIT A NOTICE OF TERMINATION TO THE DEPARTMENT OR CONSERVATION DISTRICT. THE NOTICE OF TERMINATION MUST INCLUDE:

1. THE FACILITY NAME, ADDRESS AND LOCATION
2. THE OPERATOR NAME AND ADDRESS
3. THE NPDES PERMIT NUMBER
4. THE REASON OF PERMIT TERMINATION
5. IDENTIFICATION OF THE PERSONS WHO HAVE AGREED TO AND WILL BE RESPONSIBLE FOR LONG-TERM OPERATION AND MAINTENANCE OF THE PCSM BMP'S.
6. COPY OF LEGAL INSTRUMENT: FOR ANY PROPERTY CONTAINING A PCSM BMP, THE PERMITTEE OR CO-PERMITTEE SHALL RECORD AN INSTRUMENT WITH THE RECORDER OF DEEDS WHICH WILL ASSURE DISCLOSURE OF THE PCSM BMP AND THE RELATED OBLIGATIONS IN THE ORDINARY COURSE OF A TITLE SEARCH OF THE SUBJECT PROPERTY. THE RECORDED INSTRUMENT MUST IDENTIFY THE PCSM BMP, PROVIDE FOR NECESSARY ACCESS RELATED OT LONG-TERM OPERATION AND MAINTENANCE OF PCSM BMPS AND PROVIDE NOTICE THAT THE RESPONSIBILITY FOR LONG-TERM OPERATION AND MAINTENANCE OF THE PCSM BMP IS COVENANT THAT RUNS WITH THE LAND THAT IS BINDING UPON AND ENFORCEABLE BY SUBSEQUENT GRANTEES, AND PROVIDE PROOF FOR FILING WITH THE NOTICE OF TERMINATION.
7. FINAL CERTIFICATION: THE PERMITTEE SHALL INCLUDE WITH THE NOTICE OF TERMINATION RECORD DRAWINGS' WITH A FINAL CERTIFICATION STATEMENT FROM A LICENSED PROFESSIONAL, WHICH READS AS FOLLOWS:

"I (NAME) DO HEREBY CERTIFY PURSUANT TO THE PENALTIES OF 18 PA. C.S.A. §4904 TO THE BEST OF MY KNOWLEDGE, INFORMATION AND BELIEF, THAT THE ACCOMPANYING RECORD DRAWINGS ACCURATELY REFLECT THE AS-BUILT CONDITIONS, ARE TRUE AND CORRECT, AND ARE IN CONFORMANCE WITH CHAPTER 102 OF THE RULES AND REGULATIONS OF THE DEPARTMENT OF ENVIRONMENTAL PROTECTION AND THAT THE PROJECT SITE WAS CONSTRUCTED IN ACCORDANCE WITH THE APPROVED PCSM PLAN, ALL APPROVED PLAN CHANGES AND ACCEPTED CONSTRUCTION PRACTICES."

7.1. THE PERMITTEE SHALL RETAIN A COPY OF THE RECORD DRAWINGS AS A PART OF THE APPROVED PCSM PLAN.

7.2. THE PERMITTEE SHALL PROVIDE A COPY OF THE RECORD DRAWINGS AS PART OF THE APPROVED PCSM PLAN TO THE PERSON IDENTIFIED IN THIS SECTION AS BEING RESPONSIBLE FOR THE LONG-TERM OPERATION AND MAINTENANCE OF THE PCSM BMPS.

HANDLING OF MATERIALS WITH POTENTIAL TO CAUSE POLLUTION

1. ALL BUILDING MATERIALS AND WASTES MUST BE REMOVED FROM THE SITE AND RECYCLED AND DISPOSED OF IN ACCORDANCE WITH THE DEPARTMENT'S SOLID WASTE MANAGEMENT REGULATIONS AT 25 PA. CODE 260.1 ET SEQ., 271.1, AND 287.1 ET SEQ. NO BUILDING MATERIALS OR WASTE OR UNUSED BUILDING MATERIALS SHALL BE BURNED, BURIED, DUMPED, OR DISCHARGED AT THE SITE.
2. THE CONTRACTOR WILL BE RESPONSIBLE FOR THE REMOVAL OF ANY EXCESS MATERIAL OR MANMADE SOILS DETERMINED TO BE UNSUITABLE FOR USE ON THE SITE AND MAKE SURE THE SITE(S) RECEIVING THE EXCESS HAS AN APPROVED EROSION AND SEDIMENT CONTROL PLAN THAT MEETS THE CONDITIONS OF CHAPTER 102 AND/OR OTHER STATE OR FEDERAL REGULATIONS.
3. IMMEDIATELY UPON DISCOVERING ANY UNFORESEEN CIRCUMSTANCES INCREASING THE POTENTIAL FOR ACCELERATED EROSION AND/OR SEDIMENT POLLUTION, THE OPERATOR SHALL IMPLEMENT APPROPRIATE BEST MANAGEMENT PRACTICES TO ELIMINATE THE POTENTIAL FOR ACCELERATED EROSION AND/OR SEDIMENT POLLUTION AND CONTACT THE NORTHAMPTON COUNTY CONSERVATION DISTRICT TO ENSURE THAT THE BMP'S INSTALLED IS SUFFICIENT FOR THE SITUATION.
4. THE WASTES GENERATED THROUGH CONSTRUCTION INCLUDE CONCRETE AND UNSUITABLE SOILS.

PURPOSE OF PLAN

THE POST CONSTRUCTION STORMWATER MANAGEMENT PLAN HAS BEEN DEVELOPED WITHIN ESTABLISHED GUIDELINES AND STANDARDS TO PREVENT AN INCREASE IN THE RATE OF STORMWATER RUNOFF. THE PLAN WAS DEVELOPED TO MAXIMIZE THE PROTECTION OF EXISTING DRAINAGE FEATURES AND VEGETATION WHILE PRESERVING THE INTEGRITY OF STREAM CHANNELS AND PROTECT THE PHYSICAL, BIOLOGICAL, AND CHEMICAL QUALITIES OF THE RECEIVING STREAM. THE PLAN ALSO MINIMIZES THE INCREASE IN STORMWATER RUNOFF VOLUME BY MINIMIZING LAND CLEARING, GRADING, SOIL COMPACTION, AND IMPERVIOUS AREAS WHILE UTILIZING STRUCTURAL OR NONSTRUCTURAL SCM'S THAT PREVENT OR MINIMIZE CHANGES IN STORMWATER RUNOFF.

POST-CONSTRUCTION STORMWATER MANAGEMENT LONG-TERM OPERATION AND MAINTENANCE SCHEDULE:

THE MAINTENANCE OF ALL BEST MANAGEMENT PRACTICES (BMPS) SHOWN HEREIN WILL BE OPERATED AND MAINTAINED BY EXETER TOWNSHIP THEIR HEIRS, SUCCESSORS OR ASSIGNS.

1. INFILTRATION BASIN
   - CATCH BASINS AND INLETS (UPGRADIENT OF INFILTRATION BASIN) SHOULD BE INSPECTED AND CLEANED AT LEAST TWO TIMES PER YEAR AND AFTER RUNOFF EVENTS.
   - THE VEGETATION ALONG THE SURFACE OF THE INFILTRATION BASIN SHOULD BE MAINTAINED IN GOOD CONDITION, AND ANY BARE SPOTS REVEGETATED AS SOON AS POSSIBLE.
   - VEHICLES SHOULD NOT BE PARKED OR DRIVEN ON AN INFILTRATION BASIN, AND CARE SHOULD BE TAKEN TO AVOID EXCESSIVE COMPACTION BY MOWERS.
   - SNOW STORAGE PROHIBITED: SNOW REMOVED FROM ANY ON-SITE OR OFF-SITE AREAS MAY NOT BE STORED WITHIN THE INFILTRATION BASINS/RAINGARDENS.
   - INSPECT THE BASIN AFTER RUNOFF EVENTS AND MAKE SURE THAT RUNOFF DRAINS DOWN WITHIN 72 HOURS. MOSQUITO'S SHOULD NOT BE A PROBLEM IF THE WATER DRAINS IN 72 HOURS. MOSQUITOES REQUIRE A CONSIDERABLY LONG BREEDING PERIOD WITH RELATIVELY STATIC WATER LEVELS.
   - ALSO INSPECT FOR ACCUMULATION OF SEDIMENT, DAMAGE TO OUTLET CONTROL STRUCTURES, EROSION CONTROL MEASURES, SIGNS OF WATER CONTAMINATION/SPILLS, AND SLOPE STABILITY IN THE BERMS.
   - REMOVE ACCUMULATED SEDIMENT FROM BASIN AS REQUIRED. RESTORE ORIGINAL CROSS SECTION AND INFILTRATION RATE. PROPERLY DISPOSE OF SEDIMENT.
   - SEDIMENT MUST BE REMOVED FROM THE SEDIMENT FOREBAYS BEFORE IT OCCUPIES 50 PERCENT OF THE VOLUME.
   - BMP FAILURE: IF THE BMP FAILS TO DEWATER IN 72 HOURS FROM THE END OF A STORM, THE SYSTEM MUST BE REHABILITATED OR REPLACED. CONTACT THE ENGINEER/ GEOTECHNICAL ENGINEER FOR DIRECTION.
   - WHILE VEGETATION IS BEING ESTABLISHED, MAINTENANCE SHALL BE AS FOLLOWS:

   NATIVE DETENTION AREA MIX (ERNMX-183)

   - FIRST GROWING SEASON MAINTENANCE: WHENEVER CANOPY (OVERALL VEGETATION) REACHES A HEIGHT OF 18"-24", USE A MOWER OR STRING TRIMMER TO TRIM THE MEADOW TO A HEIGHT OF 8". THIS WILL REDUCE COMPETITION BY FAST-GROWING WEEDS FOR SUNLIGHT, WATER AND NUTRIENTS NEEDED BY SLOWER GROWING, PERENNIAL NATIVES. MOWING SHOULD NOT BE DONE WITH A LAWN MOWER AS THE MOWER HEIGHT WILL BE TOO LOW AND NATIVE SEEDLINGS WILL BE KILLED. IF BIOENGINEERING OR CONTAINERIZED WOODY MATERIALS ARE USED ON THE SITE, MOWING SHOULD BE ABOVE THE NEW GROWTH OF THESE MATERIALS. MOWING SHOULD CEASE BY MID-SEPTEMBER. PROBLEM WEEDS SHOULD BE SPOT SPRAYED WITH AN APPROVED HERBICIDE (SUCH AS RODEO®) OR HAND PULLED.
   - SECOND AND SUBSEQUENT GROWING SEASON MAINTENANCE: PRIOR TO NEW SPRING GROWTH REACHING A HEIGHT OF 2" (I.E., SHORTLY AFTER FORSYTHIA OR REDBUD BLOOMS), TRIM ANY MATERIAL STANDING FROM THE PREVIOUS YEAR CLOSE TO THE GROUND (APPROXIMATELY 2"). THIS WILL ALLOW THE SOIL TO WARM MORE QUICKLY WHICH WILL STIMULATE EMERGENCE AND GROWTH OF NATIVE SEEDLINGS. IT WILL ALSO REDUCE THE LIKELIHOOD OF THE MEADOW BEING INVADED BY SHRUBS. PROBLEM WEEDS SHOULD BE SPOT SPRAYED OR HAND PULLED.
   - SPECIAL CIRCUMSTANCES SECOND GROWING SEASON: IF A HEAVY INFESTATION OF RAGWEED OR FOXTAIL IS NOTICED IN THE SECOND GROWING SEASON, TRIM THE MEADOW TO A HEIGHT OF 8". IF BIOENGINEERING OR CONTAINERIZED WOODY MATERIALS WERE USED, TRIMMING SHOULD BE ABOVE OR AROUND NEW GROWTH OF THE PLANTS. TRIMMING SHOULD CEASE AFTER MID-SEPTEMBER.

   AMENDED SOILS

   - THE VEGETATION ALONG THE SURFACE OF THE INFILTRATION BASIN SHOULD BE MAINTAINED IN GOOD CONDITION, AND ANY BARE SPOTS REVEGETATED AS SOON AS POSSIBLE.
   - INSPECT THE BASIN AFTER RUNOFF EVENTS AND MAKE SURE THAT RUNOFF DRAINS DOWN WITHIN 72 HOURS. MOSQUITO'S SHOULD NOT BE A PROBLEM IF THE WATER DRAINS IN 72 HOURS. MOSQUITOES REQUIRE A CONSIDERABLY LONG BREEDING PERIOD WITH RELATIVELY STATIC WATER LEVELS.
   - REMOVE ACCUMULATED SEDIMENT FROM BASIN AS REQUIRED. RESTORE ORIGINAL CROSS SECTION AND INFILTRATION RATE. PROPERLY DISPOSE OF SEDIMENT.
   - BMP FAILURE: IF THE BMP FAILS TO DEWATER IN 72 HOURS FROM THE END OF A STORM, THE SYSTEM MUST BE REHABILITATED OR REPLACED. CONTACT THE ENGINEER/ GEOTECHNICAL ENGINEER FOR DIRECTION.

2. VEGETATED SWALES

   IN GENERAL, MAINTENANCE STRATEGIES FOR SWALES FOCUS ON SUSTAINING THE HYDRAULIC AND POLLUTANT REMOVAL EFFICIENCY OF THE CHANNEL, AS WELL AS MAINTAINING A DENSE VEGETATIVE COVER. THE FOLLOWING SCHEDULE OF INSPECTION AND MAINTENANCE ACTIVITIES IS RECOMMENDED:

   MAINTENANCE ACTIVITIES TO BE DONE ANNUALLY OR 48 HOURS AFTER EVERY MAJOR STORM EVENT (> 1 INCH RAINFALL DEPTH):

   - INSPECT AND CORRECT EROSION PROBLEMS, DAMAGE TO VEGETATION, AND SEDIMENT AND DEBRIS ACCUMULATION (WHEN >3 IN. AT ANY SPOT OR WHERE IT COVERS VEGETATION).
   - INSPECT VEGETATION ON SIDE SLOPES FOR EROSION AND FORMATION OF RILLS OR GULLIES, CORRECT AS NEEDED.
   - INSPECT FOR POOLS OF STANDING WATER; DEWATER AND DISCHARGE TO A STORM SEWER AT AN APPROVED LOCATION AND RESTORE TO DESIGN GRADE.
   - MOW AND TRIM VEGETATION TO ENSURE SAFETY, AESTHETICS, PROPER SWALE OPERATION, OR TO SUPPRESS WEEDS AND INVASIVE VEGETATION; DISPOSE OF CUTTINGS IN A LOCAL COMPOSTING FACILITY; MOW ONLY WHEN SWALE IS DRY TO AVOID RUTTING.
   - INSPECT FOR LITTER; REMOVE PRIOR TO MOWING.
   - INSPECT FOR UNIFORMITY IN CROSS-SECTION AND LONGITUDINAL SLOPE, CORRECT AS NEEDED.
   - INSPECT SWALE INLET (CURB CUTS, PIPES, ETC.) AND OUTLET FOR SIGNS OF EROSION OR BLOCKAGE, CORRECT AS NEEDED.

   MAINTENANCE ACTIVITIES TO BE DONE AS NEEDED:

   - PLANT ALTERNATIVE GRASS SPECIES IN THE EVENT OF UNSUCCESSFUL ESTABLISHMENT.
   - RESEED BARE AREAS; INSTALL APPROPRIATE EROSION CONTROL MEASURES WHEN NATIVE SOIL IS EXPOSED OR EROSION CHANNELS ARE FORMING.
   - ROTOTILL AND REPLANT SWALE IF DRAW DOWN TIME IS LESS THAN 48 HOURS.
   - INSPECT AND CORRECT CHECK DAMS WHEN SIGNS OF ALTERED WATER FLOW (CHANNELIZATION, OBSTRUCTIONS, ETC.) IS IDENTIFIED.
   - WATER DURING DRY PERIODS, FERTILIZE, AND APPLY PESTICIDE ONLY WHEN ABSOLUTELY NECESSARY.

POST-CONSTRUCTION STORMWATER MANAGEMENT LONG-TERM OPERATION AND MAINTENANCE SCHEDULE (CONTINUED):

- WINTER CONDITIONS ALSO NECESSITATE ADDITIONAL MAINTENANCE CONCERNS, WHICH INCLUDE THE FOLLOWING:
- INSPECT SWALE IMMEDIATELY AFTER THE SPRING MELT, REMOVE RESIDUALS (E.G. SAND) AND REPLACE DAMAGED VEGETATION WITHOUT DISTURBING REMAINING VEGETATION.
- IF ROADSIDE OR PARKING LOT RUNOFF IS DIRECTED TO SWALE, MULCHING AND/OR SOIL AERATION/MANIPULATION MAY BE REQUIRED IN THE SPRING TO RESTORE SOIL STRUCTURE AND MOISTURE CAPACITY AND TO REDUCE THE IMPACTS OF DEICING AGENTS.
- USE NONTOXIC, ORGANIC DEICING AGENTS, APPLIED EITHER AS BLENDED, MAGNESIUM CHLORIDE-BASED LIQUID PRODUCTS OR AS PRETREATED SALT.
- USE SALT-TOLERANT VEGETATION IN SWALES.

3. SNOUT INLET FILTER
   - SUMPS SHOULD BE EMPTIED WHEN OVER HALF FULL OF SEDIMENT AND/OR TRASH.
   - CLEAN DURING SUMP EMPTYING SERVICE BY RINSING WITH A HOSE OR PRESSURE WASHER DURING THE CLEANING SEQUENCE OF THE CATCH BASIN AND FLUSHING THE ANTI-SIPHON VENT WITH WATER OR AIR TO VERIFY THAT IT IS CLEAR.
   - INSPECT AFTER RUNOFF EVENTS.
   - SAND AND SALT ARE SIGNIFICANTLY INCREASED IN THE WINTER, AND MAY WARRANT MORE FREQUENT MAINTENANCE.

4. INFILTRATION BED
   - INSPECT THE BED AFTER RUNOFF EVENTS AND MAKE SURE THAT RUNOFF DRAINS DOWN WITHIN 72 HOURS. MOSQUITO'S SHOULD NOT BE A PROBLEM IF THE WATER DRAINS IN 72 HOURS. MOSQUITO'S REQUIRE A CONSIDERABLY LONG BREEDING PERIOD WITH RELATIVELY STATIC WATER LEVELS.
   - REMOVE ACCUMULATED SEDIMENT FROM BED AS REQUIRED. RESTORE ORIGINAL CROSS SECTION AND INFILTRATION RATE. PROPERLY DISPOSE OF SEDIMENT.
   - SCM FAILURE: IF THE SCM FAILS TO DEWATER IN 72 HOURS FROM THE END OF A STORM, THE SYSTEM MUST BE REHABILITATED OR REPLACED. CONTACT THE ENGINEER/GEOTECHNICAL ENGINEER FOR DIRECTION.
   - SINKHOLES SHALL BE REPAIRED AS PER THE SINKHOLE REPAIR DETAILS.

SURVEY NOTES

1. SUBJECT PROPERTY LINES DEPICTED ON THIS PLAN HAVE BEEN ESTABLISHED BASED UPON SURVEY RECEIVED FROM GVC.
2. RIGHT-OF-WAY DEPICTED HAS BEEN ESTABLISHED REFERENCING THE FOLLOWING PLANS OF RECORD:
   DEMOSS ROAD (T-667) - "FAIRLANE COMMERCAIL LOTS" DATED JUNE 1994.
   FAIRLANE ROAD - "FINAL SUBDIVISION/LAND DEVELOPMENT PLAN FAIRLANE COMMERCIAL LOT 1" DATED APRIL 1992, INST #1992024457.
3. THIS SURVEY HORIZONTALLY REFERENCES THE NORTH AMERICAN DATUM OF 1983 (NAD 83), PENNSYLVANIA STATE PLANE PA SOUTH ZONE, DETERMINED THROUGH GNSS METHODS BASED UPON POSITIONAL INFORMATION REFERENCED THROUGH THE KEYNETGPS GNSS VRS NETWORK.
4. THE VERTICAL DATUM IS BASED ON THE NORTH AMERICAN VERTICAL DATUM OF 1988 (NAVD 88), GEOID 18 DETERMINED THROUGH GNSS METHODS BASED UPON POSITIONAL INFORMATION REFERENCED THROUGH KEYNETGPS GNSS VRS NETWORK. DATUM REFERENCED PROJECT BENCHMARKS LOCATED AS:
   BM1 IS A CONCRETE MONUMENT FND LOCATED ALONG THE NORTHERN RIGHT-OF-WAY LINE OF GIBRALTOR ROAD (T-668) APPROX. 135' SOUTHWEST FROM UTILITY POLE ME 52913-36008. BM1 HAS AN ELEVATION OF 260.06.
   BM2 IS A DRILL HOLE LOCATED IN A CURB ALONG DEMOSS ROAD (T-667) APPROX. 33' SOUTHWEST OF A TOWNSHIP WELL MARKER LOCATED IN DEMOSS ROAD. BM2 HAS AN ELEVATION OF 245.33'.
5. TOPOGRAPHIC EXISTING CONDITIONS AND CONTOURS SHOWN ARE DERIVED FROM FIELD RUN TOPOGRAPHIC SURVEY PERFORMED BY GVC, AND SUPPLEMENTED FIELD RUN TOPOGRAPHIC SURVEY PERFORMED BY HRG, OCTOBER 2025.
6. NO WETLANDS WERE IDENTIFIED ON THE SITE PER A HERBERT, ROWLAND AND GRUBIC, INC. SEPTEMBER 4, 2025 SITE INVESTIGATION.
7. THE LOCATIONS OF UTILITIES AS SHOWN HEREON ARE BASED ON ABOVEGROUND FEATURES, FIELD OBSERVATIONS\SURVEY, AND RECORD DRAWINGS PROVIDED BY UTILITY COMPANIES. LOCATIONS OF UNDERGROUND UTILITIES/STRUCTURES MAY VARY FROM LOCATIONS SHOWN HEREON. ADDITIONAL BURIED UTILITIES/STRUCTURES MAY BE ENCOUNTERED. NO EXCAVATIONS WERE MADE DURING THE PROGRESS OF THIS SURVEY TO LOCATE BURIED UTILITIES/STRUCTURES. IT SHALL BE THE CONTRACTORS RESPONSIBILITY TO FIELD VERIFY THE EXACT LOCATION AND DEPTH OF ALL UTILITY LINES PRIOR TO THE START OF ANY CONSTRUCTION ACTIVITIES.
8. PRIOR TO THE COMMENCEMENT OF ANY CONSTRUCTION ACTIVITIES, THE CONTRACTOR SHALL CONTACT ALL UTILITY COMPANIES IN COMPLIANCE WITH ACT 187 TO VERIFY THE EXACT LOCATION OF ALL UNDERGROUND UTILITIES. PA ONE CALL WAS PERFORMED PRIOR TO FIELD SURVEYING. SERIAL NUMBER 20252811468.

GEOLOGIC POTENTIAL FOR ON-SITE SOILS TO CAUSE POLLUTION

THE SITE IS LOCATED IN KARST (CARBONATE) GEOLOGIC SETTING WHERE THE POTENTIAL FOR GROUNDWATER POLLUTION FROM ON-SITE SOILS MAY EXIST. SITE-SPECIFIC TESTING AND EVALUATION FOR KARST FEATURES AND LIMITING ZONES WAS PREFORMED BY DAVID BLACKMORE & ASSOCIATES, INC. (DBA) AND NOTED IN THEIR GEOLOGICAL REPORT DATED JANUARY 27, 2026. IN THE EVENT OF A SINKHOLE BEING DISCOVERED, THE SERVICES OF A GEOTECHNICAL ENGINEER OR PROFESSIONAL GEOLOGIST SHALL BE OBTAINED FOR THE SINKHOLE REPAIR.

SEQUENCE OF CONSTRUCTION FOR INDIVIDUAL BMP INSTALLATION

INFILTRATION BASINS:

1. PROTECT INFILTRATION BASIN AREA FROM COMPACTION PRIOR TO INSTALLATION.
2. PREVENT SEDIMENTATION AND/OR DAMAGE FROM CONSTRUCTION ACTIVITY. AFTER INSTALLATION, PREVENT SEDIMENT-LADEN WATER FROM ENTERING INLETS AND PIPES.
3. INSTALL AND MAINTAIN PROPER EROSION AND SEDIMENT CONTROL MEASURES DURING CONSTRUCTION.
4. EXCAVATE INFILTRATION BASIN TO THE BASIN BOTTOM OR TO THE DEPTH OF INFILTRATION MEDIA, AS REQUIRED, TO AN UNCOMPACTED SUBGRADE FREE FROM ROCKS AND DEBRIS. DO NOT COMPACT SUBGRADE.
5. SCARIFY THE EXISTING SOIL SURFACES. DO NOT COMPACT IN-SITU SOILS.
6. PERFORM BMP PERFORMANCE TESTING.
7. INSTALL OUTLET CONTROL STRUCTURES.
8. SEED AND MULCH TOPSOIL.
9. DO NOT REMOVE INLET PROTECTION OR OTHER EROSION AND SEDIMENT CONTROL MEASURES UNTIL SITE IS FULLY STABILIZED.

SNOUT

INSTALL AFTER TRIBUTARY DRAINAGE AREA TO THE INLET HAS REACHED PERMANENT STABILIZATION.

CHANNELS

VEGETATED:

1. ROUGH GRADE THE CHANNEL. EQUIPMENT SHALL AVOID EXCESSIVE COMPACTION AND/OR LAND DISTURBANCE. EXCAVATING EQUIPMENT SHALL OPERATE FROM THE SIDE OF THE CHANNEL AND NEVER ON THE BOTTOM. IF EXCAVATION LEADS TO SUBSTANTIAL COMPACTION OF THE SUBGRADE, 18 INCHES SHALL BE REMOVED AND REPLACED WITH A BLEND OF TOPSOIL AND SAND TO PROMOTE INFILTRATION AND BIOLOGICAL GROWTH. AT THE VERY LEAST, TOPSOIL SHALL BE THOROUGHLY DEEP PLOWED INTO THE SUBGRADE IN ORDER TO PENETRATE THE COMPACTED ZONE AND PROMOTE AERATION AND THE FORMATION OF MICROPORES. FOLLOWING THIS, THE AREA SHOULD BE DISKED PRIOR TO FINAL GRADING OF TOPSOIL.
2. FINE GRADE THE VEGETATED CHANNEL. ACCURATE GRADING IS CRUCIAL FOR SWALES. EVEN THE SMALLEST NON-CONFORMITIES MAY COMPROMISE FLOW CONDITIONS.
3. SEED, VEGETATE AND INSTALL PROTECTIVE LINING AS PER APPROVED PLANS AND ACCORDING TO THE SEEDING SCHEDULE. PLANT THE CHANNEL AT A TIME OF THE YEAR WHEN SUCCESSFUL ESTABLISHMENT WITHOUT IRRIGATION IS MOST LIKELY. HOWEVER, TEMPORARY IRRIGATION MAY BE NEEDED IN PERIODS OF LITTLE RAIN OR DROUGHT. VEGETATION SHOULD BE ESTABLISHED AS SOON AS POSSIBLE TO PREVENT EROSION AND SCOUR.
4. ONCE ALL TRIBUTARY AREAS ARE SUFFICIENTLY STABILIZED, REMOVE TEMPORARY EROSION AND SEDIMENT CONTROLS. IT IS VERY IMPORTANT THAT THE CHANNEL BE STABILIZED BEFORE RECEIVING UPLAND STORMWATER FLOW.
5. REGRADE AND RESEED IMMEDIATELY AFTER CONSTRUCTION AND STABILIZATION HAS OCCURRED. ANY DAMAGED AREAS SHOULD BE FULLY RESTORED TO ENSURE FUTURE FUNCTIONALITY OF THE CHANNEL.

UNDERGROUND DETENTION BASIN/UNDERGROUND INFILTRATION BED

- INSTALL AND MAINTAIN ADEQUATE EROSION AND SEDIMENT CONTROL MEASURES DURING CONSTRUCTION.
- THE EXISTING SUBGRADE UNDER THE BEDS SHOULD NOT BE COMPACTED OR SUBJECT TO EXCESSIVE CONSTRUCTION EQUIPMENT TRAFFIC PRIOR TO GEOTEXTILE AND STONE BED PLACEMENT.
- WHERE EROSION OF SUBGRADE HAS CAUSED ACCUMULATION OF FINE MATERIALS AND/OR SURFACE PONDING, THIS MATERIAL SHOULD BE REMOVED WITH LIGHT EQUIPMENT AND THE UNDERLYING SOILS SCARIFIED TO A MINIMUM DEPTH OF 6 INCHES WITH A YAKE RAKE AND LIGHT TRACTOR, ALL FINE GRADING SHALL BE DONE BY HAND. ALL BED BOTTOMS SHOULD BE A LEVEL GRADE.
- INSTALL UPSTREAM AND DOWNSTREAM CONTROL STRUCTURES, CLEANOUTS, PERFORATED PIPING, AND ALL OTHER NECESSARY STORMWATER STRUCTURES.
- GEOTEXTILE AND BED AGGREGATE SHOULD BE PLACED IMMEDIATELY AFTER APPROVAL OF SUBGRADE PREPARATION AND INSTALLATION OF STRUCTURES. GEOTEXTILE SHOULD BE PLACED IN ACCORDANCE WITH MANUFACTURER'S STANDARDS AND RECOMMENDATIONS, ADJACENT STRIPS OF GEOTEXTILE SHOULD OVERLAP A MINIMUM OF 16 INCHES. IT SHOULD ALSO BE SECURED AT LEAST 4 FEET OUTSIDE OF BED IN ORDER TO PREVENT ANY RUNOFF OR SEDIMENT FROM ENTERING THE STORAGE BED. THIS EDGE STRIP SHOULD REMAIN IN PLACE UNTIL ALL BARE SOILS CONTIGUOUS TO BEDS ARE STABILIZED AND VEGETATED. AS THE SITE IS FULLY STABILIZED, EXCESS GEOTEXTILE ALONG THE BED EDGES CAN BE CUT BACK TO THE EDGE OF THE BED.
- BEGIN PLACING AASHTO #1 STONE IN MAXIMUM 8-INCH LIFTS OVER LINER TO THE DEPTH INDICATED ON THE DETAILS.
- INSTALL PERFORATED PIPE AS SHOWN ON THE DETAILS.
- BEGIN BACKFILLING PIPES WITH AASHTO #1 STONE TO THE DEPTH INDICATED ON THE DETAILS.
- WRAP NON-WOVEN GEO-TEXTILE AND OVERLAP A MINIMUM OF 3' OVER TOP OF STONE BACKFILL.
- BACKFILL WITH STRUCTURAL FILL OVER THE BED IN MAXIMUM 6-INCH LIFTS.
- PLACE PAVEMENT SECTION IN ACCORDANCE WITH THE DETAIL.
- DO NOT REMOVE EROSION AND SEDIMENT CONTROL BMP'S UNTIL TRIBUTARY AREAS ARE STABILIZED.

TOPSOIL APPLICATION

1. GRADED AREAS SHALL BE SCARIFIED OR OTHERWISE LOOSENED TO A DEPTH OF 3 TO 5 INCHES TO PERMIT BONDING OF THE TOPSOIL TO THE SURFACE AREAS AND TO PROVIDE A ROUGHENED SURFACE TO PREVENT TOPSOIL FROM SLIDING DOWN SLOPE.
2. TOPSOIL SHOULD BE UNIFORMLY DISTRIBUTED ACROSS THE DISTURBED AREA TO A DEPTH OF 4 TO 8 INCHES MINIMUM - 2 INCHES ON FILL OUTSLOPES. SPREADING SHOULD BE DONE IN SUCH A MANNER THAT SODDING OR SEEDING CAN PROCEED WITH A MINIMUM OF ADDITIONAL PREPARATION OR TILLAGE. IRREGULARITIES IN THE SURFACE RESULTING FROM TOPSOIL PLACEMENT SHOULD BE CORRECTED IN ORDER TO PREVENT FORMATION OF DEPRESSIONS UNLESS SUCH DEPRESSIONS ARE PART OF THE PCSM PLAN.
3. TOPSOIL SHOULD NOT BE PLACED WHILE THE TOPSOIL OR SUBSOIL IS IN A FROZEN OR MUDDY CONDITION, WHEN THE SUBSOIL IS EXCESSIVELY WET, OR IN A CONDITION THAT MAY OTHERWISE BE DETRIMENTAL TO PROPER GRADING AND SEEDBED PREPARATION. COMPACTED SOILS SHOULD BE SCARIFIED 6 TO 12 INCHES ALONG CONTOUR WHEREVER POSSIBLE PRIOR TO SEEDING.

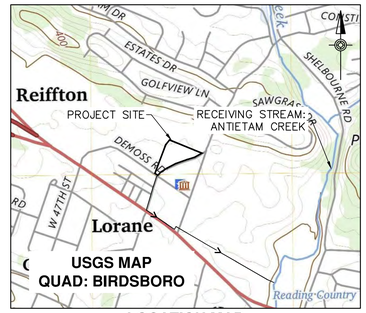

LOCATION MAP
SCALE: 1"=1,000'

Sheet List Table

Sheet Number	Sheet Title	Description
01	COVER SHEET	CV
02	NOTES	NT
03	OVERALL BOUNDARY PLAN	OVAL
04	EXISTING CONDITIONS	EC-1
05	OVERALL GRADING & PCSM PLAN	GR-OA
06	GRADING & PCSM PLAN	GR-1
07	STORM PROFILES	PR-1
08	STORM AND SANITARY PROFILES	PR-2
09	DETAILS SHEET	DT-1
10	DETAILS SHEET	DT-2
11	DETAILS SHEET	DT-3
12	DETAILS SHEET	DT-4

PA ONE CALL
ACT 287, AS AMENDED

PENNSYLVANIA ONE CALL SYSTEM, INC. - 811 KNOW WHAT'S BELOW. DIG SAFE. CALL BEFORE YOU DIG!

PENNSYLVANIA ACT 287 (1974) AS AMENDED, REQUIRES NOTIFICATION BY EXCAVATORS, DESIGNERS, OR ANY PERSON PREPARING TO DISTURB THE EARTH'S SURFACE ANYWHERE IN THE COMMONWEALTH.
PA ONE-CALL SERIAL NO. 20252811468 HAS BEEN ASSIGNED TO THIS PROJECT ON 10/08/25.

PA ONE CALL-UTILITY LIST

COMPANY: WINDSTREAM
ADDRESS: 1450 CENTER POINT RD
HIAWATHA, KS 52233
CONTACT: LOCATE DESK PERSONNEL
EMAIL: locate.

STAGING OF MAJOR CONSTRUCTION ACTIVITIES

ALL EARTH DISTURBANCE ACTIVITIES SHALL PROCEED IN ACCORDANCE WITH THE FOLLOWING SEQUENCE. DEVIATION FROM THAT SEQUENCE MUST BE APPROVED IN WRITING FROM THE BERKS COUNTY CONSERVATION DISTRICT OR BY THE DEPARTMENT PRIOR TO IMPLEMENTATION.

- AT LEAST 7 DAYS PRIOR TO STARTING ANY EARTH DISTURBANCE ACTIVITIES, INCLUDING CLEARING AND GRUBBING, THE OWNER AND/OR OPERATOR SHALL INVITE ALL CONTRACTORS INVOLVED IN THOSE ACTIVITIES, THE LANDOWNER, ALL APPROPRIATE MUNICIPAL OFFICIALS, THE EROSION AND SEDIMENT CONTROL PLAN PREPARER, THE PCSM PLAN PREPARER, THE LICENSED PROFESSIONAL RESPONSIBLE FOR OVERSIGHT OF CRITICAL STAGES OF IMPLEMENTATION OF THE PCSM PLAN, AND A REPRESENTATIVE OF THE BERKS COUNTY CONSERVATION DISTRICT, TO AN ON-SITE PRE-CONSTRUCTION MEETING.
- UPON INSTALLATION OR STABILIZATION OF ALL PERIMETER SEDIMENT CONTROL BMP'S AND AT LEAST 3 DAYS PRIOR TO PROCEEDING WITH THE BULK EARTH DISTURBANCE ACTIVITIES, THE PERMITTEE OR CO-PERMITTEE SHALL PROVIDE NOTIFICATION TO THE DEPARTMENT OR AUTHORIZED CONSERVATION DISTRICT.
- THE PERMITTEE MUST RECORD THE APPROVED NPDES PERMIT AND PCSM PLANS AND PROVIDE A COPY OF THE FILING TO THE DISTRICT. THE DISTRICT HAS FIVE BUSINESS DAYS TO DETERMINE IF THE FILING IS ACCEPTABLE. THE PERMITTEE MUST ALSO INVITE THE PRE-CONSTRUCTION CO-PERMITTEES, OPERATORS, MUNICIPAL REPRESENTATIVES, LICENSED PROFESSIONALS OR DESIGNEES, AND ALL OTHERS RESPONSIBLE FOR IMPLEMENTING OR MONITORING THE EARTH DISTURBANCE ACTIVITY AND IMPLEMENTATION OF E&S AND PCSM PLANS AND CRITICAL STAGES OF THE APPROVED PCSM PLAN.
- AT LEAST 3 DAYS PRIOR TO STARTING ANY EARTH DISTURBANCE ACTIVITIES, OR EXPANDING INTO AN AREA PREVIOUSLY UNMARKED, THE PENNSYLVANIA ONE CALL SYSTEM INCORPORATED SHALL BE NOTIFIED AT 1-800-242-1776 FOR THE LOCATION OF EXISTING UNDERGROUND UTILITIES.
- OPERATION AND MAINTENANCE (O&M) – THE CO-PERMITTEE MUST CONDUCT VISUAL SITE INSPECTIONS THROUGHOUT THE DURATION OF CONSTRUCTION AND UNTIL THE NOT HAS BEEN APPROVED. WEEKLY INSPECTIONS AND WITHIN 24 HOURS AFTER THE END OF STORM EVENT IN THE AMOUNT OF 0.25 INCH OR GREATER OVER A 24-HOUR PERIOD OR THE OCCURRENCE OF SNOWMELT SUFFICIENT TO CAUSE A DISCHARGE. THE PERMITTEE MUST DOCUMENT EACH SITE INSPECTION ON DEP'S CHAPTER 102 VISUAL SITE INSPECTION REPORT (3800-FM-BCW0271D) OR ALTERNATIVE DOCUMENT OR ELECTRONIC FORM THAT COLLECTS AND RETAINS IDENTICAL INFORMATION. BEGINNING DECEMBER 8, 2025, QUALIFIED PERSONNEL MUST COMPLETE THE VISUAL SITE INSPECTION REPORTS. THE PERMITTEE MUST TAKE COLOR PHOTOGRAPHS (WITH A DATE AND TIME STAMP) OF E&S BMP'S AND PCSM SCMS ON THE PROJECT SITE MONTHLY.
- THE CO-PERMITTESS IS DEFINED AS THE SITE CONTRACTOR OR CONTRACTOR WHO CONDUCTS EARTH DISTURBANCE ACTIVITIES WITHIN THE PERMITTED LIMIT OF DISTURBANCE AND IS SUBSEQUENTLY RESPONSIBLE FOR ALL PERMITTEE RESPONSIBILITIES DURING CONSTRUCTION ACTIVITIES UNTIL NOT AND CLOSEOUT OF THE NPDES PERMIT IS RECEIVED.
- THE PERMITTEE MUST COMPLETE CONFIRMATION TESTING FOR INFILTRATION CAPACITY TO VERIFY THAT INFILTRATION SCMS WILL PERFORM AS DESIGNED. CONFIRMATION TESTING IS A CRITICAL STAGE OF SCM CONSTRUCTION THAT MUST BE OVERSEEN BY A LICENSED PROFESSIONAL OR DESIGNEE. THE TESTING INSPECTION MUST BE PERFORMED AFTER MAJOR EARTHWORK IS COMPLETE, AFTER PERMANENT STABILIZATION OF THE SCM'S DRAINAGE AREA, AND, PRIOR TO PLACING SOIL MEDIA OR STONE IN AN SCM. THE PERMITTEE MAY NOT PROCEED TO COMPLETE CONSTRUCTION OF THE SCM UNTIL A LICENSED PROFESSIONAL EVALUATES THE CONFIRMATION TESTING AND NOTIFIES THE PERMITTEE THAT THE INFILTRATION SCM MEETS THE PURPOSE AND INTENT OF THE APPROVED PCSM PLAN, WITHOUT OVERFLOWING AT THE STORM EVENT THE SCM IS DESIGNED TO MANAGE AND WILL PROTECT WATERS OF THE COMMONWEALTH. IF THE LICENSED PROFESSIONAL DETERMINES THAT THE SCM WILL NOT FUNCTION AS DESIGNED, THE DISTRICT SHOULD BE CONTACTED TO DISCUSS ANY CORRECTIVE MEASURES TO BE PERFORMED. CHANGES SHOULD BE PERFORMED UNDER THE DIRECTION OF THE LICENSED PROFESSIONAL AND THE SCM RETESTED. CHANGES MAY NEED AN AMENDMENT TO THE APPROVED PCSM PLAN. IF AMENDMENT IS REQUIRED, THE PERMITTEE MAY NOT PROCEED WITH IMPLEMENTING THE CHANGES UNTIL WRITTEN APPROVAL IS OBTAINED FROM THE DISTRICT. WHERE CONFIRMATION TESTING FOR INFILTRATION CAPACITY IS COMPLETED, THE PERMITTEE MUST REPORT THE RESULTS OF THE TESTING ON THE SCM CONSTRUCTION CERTIFICATION FORM.
- ALL EARTH DISTURBANCE ACTIVITIES SHALL PROCEED IN ACCORDANCE WITH THE FOLLOWING SEQUENCE. DEVIATION FROM THAT SEQUENCE MUST BE APPROVED IN WRITING FROM THE BERKS COUNTY CONSERVATION DISTRICT OR BY THE DEPARTMENT PRIOR TO IMPLEMENTATION. EACH STEP OF THE SEQUENCE SHALL BE COMPLETED BEFORE PROCEEDING TO THE NEXT STEP, EXCEPT WHERE NOTED.
- CLEARING, GRUBBING, AND TOPSOIL STRIPPING SHALL BE LIMITED ONLY TO THOSE AREAS DESCRIBED IN EACH STAGE OF THE CONSTRUCTION SEQUENCE. GENERAL SITE CLEARING, GRUBBING AND TOPSOIL STRIPPING MAY NOT COMMENCE IN ANY STAGE OR PHASE OF THE PROJECT UNTIL THE E&S BMP'S SPECIFIED BY THE BMP SEQUENCE FOR THAT STAGE OR PHASE HAS BEEN INSTALLED AND ARE FUNCTIONING AS DESCRIBED IN THE E&S PLAN.
- IMMEDIATELY UPON DISCOVERING UNFORESEEN CIRCUMSTANCES POSING THE POTENTIAL FOR ACCELERATED EROSION AND/OR SEDIMENT POLLUTION, THE OPERATOR SHALL IMPLEMENT APPROPRIATE BEST MANAGEMENT PRACTICES TO ELIMINATE THE POTENTIAL FOR ACCELERATED EROSION AND/OR SEDIMENT POLLUTION AND NOTIFY THE COUNTY CONSERVATION DISTRICT.
- ALL PUMPING OF SEDIMENT LADEN WATER SHALL BE THROUGH A SEDIMENT CONTROL BMP, SUCH AS A PUMPED WATER FILTER BAG OR EQUIVALENT SEDIMENT REMOVAL FACILITY, OVER UNDISTURBED VEGETATED AREAS.
- UPON TEMPORARY CESSATION OF AN EARTH DISTURBANCE ACTIVITY FOR 4 DAYS OR MORE, THE SITE SHALL BE IMMEDIATELY SEEDED, MULCHED OR OTHERWISE PROTECTED FROM ACCELERATED EROSION AND SEDIMENTATION PENDING FUTURE EARTH DISTURBANCE ACTIVITIES.
- THE CONTRACTOR IS RESPONSIBLE TO CONTACT THE DESIGN ENGINEER PRIOR TO INITIATING THE CONSTRUCTION OF THE FOLLOWING CRITICAL STAGES OF CONSTRUCTION: **DURING CONSTRUCTION OF THE INFILTRATION BASIN, DURING CONSTRUCTION OF INFILTRATION BED, DURING INSTALLATION OF OUTLET CONTROL STRUCTURE (SCM-1 & SCM-3), AND UPON FINAL COMPLETION TO VERIFY ALL PCSM MEASURES ARE INSTALLED AND FUNCTIONING AS DESIGNED.**

CONSTRUCTION SEQUENCE:

1. FIELD MARK THE LIMITS OF DISTURBANCE. ESTABLISH SURVEY BENCHMARKS AND REFERENCE POINTS.
2. INSTALL INLET PROTECTION AT EXISTING INLET-1 AND INLET-2. CLEAR AND GRUB THE NECESSARY AREAS TO INSTALL THE ROCK CONSTRUCTION ENTRANCE AND SILT SOCKS. STRIP/STOCKPILE TOPSOIL AS REQUIRED. INSTALL SILT SOCK AROUND THE STOCKPILE. INSTALL THE ROCK CONSTRUCTION ENTRANCE (#1-2), AND ALL SILT SOCK (#1 – 6). NO CONSTRUCTION VEHICLES ARE PERMITTED TO LEAVE THE SITE OTHER THAN OVER THE ROCK CONSTRUCTION ENTRANCE. INSTALL TEMPORARY CHAIN LINK FENCE ON FIRE STATION PARCEL AND STORAGE/STAGING AREA.
3. INSTALL SCM-1 HW ORIFICE PLACE AND REPLACE SCM-1 OUTLET STRUCTURE. **THIS IS A CRITICAL STAGE OF CONSTRUCTION AND A LICENSED PROFESSIONAL SHOULD BE NOTIFIED WHEN IT IS TO OCCUR.** INSTALL SILT SOCK AROUND SCM-1 OUTLET STRUCTURE AND HEADWALL.
4. CLEAR AND GRUB AREA NECESSARY FOR THE BYPASS PIPE SYSTEM TO BE INSTALLED (EW-1 TO HW-1 AND HW-2). STRIP AND STOCKPILE TOPSOIL. REMOVE THE STORM PIPE AND INLET ADJACENT TO THE PROPOSED BYPASS PIPE. RELOCATE THE IRRIGATION LINE. INSTALL STORM PIPE SYSTEM UPSLOPE OF EW-1. INSTALL INLET PROTECTION AND ROCK APRON AS SHOWN ON THE PLAN.
5. CLEAR AND GRUB AREA NECESSARY FOR THE SWALES UPSLOPE OF HW-1 AND HW-2 TO BE INSTALLED. STRIP AND STOCKPILE TOPSOIL. PROCEED WITH SWALE, INSTALLATION, SEED, LINE AND STABILIZE THE SWALES PER THE DETAILS. ALL RUNOFF ENTERING THE SWALE AND DOWNSLOPE BYPASS PIPE SYSTEM SHALL BE CLEAN.
6. INSTALL COMPOST FILTER SOCK UPSLOPE OF SCM-2. CLEAR AND GRUB AREA OF SCM-2. STRIP AND STOCKPILE TOPSOIL. BEGIN EXCAVATION/CONSTRUCTION OF SCM-2. **THIS IS A CRITICAL STAGE OF CONSTRUCTION AND A LICENSED PROFESSIONAL SHOULD BE NOTIFIED WHEN IT IS TO OCCUR.** COMPACTION OF THE BASIN FLOOR SHOULD BE AVOIDED. CONCURRENT WITH STEP 8, INSTALL EW-2A.1 AND EW-2B.1 AND ROCK APRON, BEGIN INSTALLING UPSLOPE PIPE. ONCE ENDWALLS AND PIPE PAST BASIN LIMIT IS INSTALLED, APPLY TEMPORARY SEED TO THE BASIN FLOOR. APPLY PERMANENT SEED TO THE BASIN SLOPES AND LINE THE SLOPES. INSTALL ORANGE CONSTRUCTION FENCE AROUND THE BASIN.
7. CLEAR AND GRUB REMAINING PORTIONS OF THE SITE. STRIP AND STOCKPILE TOPSOIL. STABILIZE STOCKPILE WITH TEMPORARY SEEDING. REMOVE ANY REMAINING INLETS. RELOCATE ANY REMAINING UTILITIES.
8. BEGIN ROUGH GRADING THE SITE. STABILIZE ANY AREAS THAT WILL REMAIN UNDISTURBED FOR MORE THAN FOUR DAYS ACCORDING TO THE TEMPORARY SEEDING SCHEDULE. INSTALL THE CONCRETE WASHOUT. ONCE AN AREA HAS REACHED FINAL GRADE, STABILIZE IT IMMEDIATELY. ONCE BUILDING FOOTPRINT IS GRADED, BUILDING CONSTRUCTION MAY BEGIN. ANY MATERIAL HAULED OFF-SITE SHALL BE CLEAN FILL TAKEN TO A SITE WITH AN E&S/NPDES PERMIT. CONTINUE INSTALLING STORM PIPE SYSTEM UPSLOPE OF EW-2A.1 AND EW-2B.1. INSTALL INLET SNOUTS. INSTALL INLET PROTECTION SHOWN ON THE PLAN. INSTALL STONE SUBBASE IN THE LARGE APRON, ADJACENT TO RCE #2.
9. BEGIN INSTALLING THE UNDERGROUND BED (SCM-3). **THIS IS A CRITICAL STAGE OF CONSTRUCTION AND A LICENSED PROFESSIONAL SHALL BE NOTIFIED TO WHEN IT IS TO OCCUR.** REFERENCE THE PCSM BMP INSTALLATION SEQUENCE AND SCM PERFORMANCE INFILTRATION TESTING ON THE PCSM PLANS FOR DETAILED SEQUENCING. THREE (3) FEET OF COVER SHALL BE PROVIDED ABOVE SCM-3. INSTALL INLETS AND STORM PIPE UPSLOPE OF SCM-3. INSTALL INLET SNOUTS. INSTALL INLET PROTECTION AS SHOWN ON THE PLAN. INSTALL ORANGE CONSTRUCTION FENCE AROUND THE BED.
10. INSTALL ELECTRIC, GAS, SEWER, WATER SERVICES AND ASSOCIATED UTILITIES. SEWER AND WATER INSTALL WITHIN GIBRALTAR ROAD SHALL BE COORDINATED WITH PAWC AND THE TOWNSHIP. APPROPRIATE ROAD CLOSURES, DETOURS AND TRAFFIC CONTROL SHALL BE PROVIDED. THE LENGTH OF EXCAVATED TRENCH OPEN SHALL NOT BE GREATER THAN THE TOTAL LENGTH OF PIPE THAT CAN BE INSTALLED AND BACKFILLED IN ONE WORKING DAY.
11. FINISH INSTALLING THE STORM PIPES AND INLETS WITHIN GIBRALTAR ROAD. INSTALL INLET PROTECTION SHOWN ON THE PLAN.
12. FINISH GRADING PROPOSED AREAS AND INSTALL THE CURB, SUBBASE AND BASE COURSE.
13. FINALIZE SITE GRADING AND LANDSCAPING. ONCE FINAL GRADE IS REACHED, SPREAD TOPSOIL, SEED AND MULCH. COMPLETE INSTALLATION OF ASPHALT SURFACES AND CONCRETE/CONCRETE SIDEWALKS AS SHOWN ON THE PLANS. STRIPE THE PARKING LOT AS SHOWN ON THE PLANS.
14. UPON COMPLETION OF ALL EARTH DISTURBANCE ACTIVITIES AND PERMANENT STABILIZATION OF ALL DISTURBED AREAS, THE OWNER AND/OR OPERATORS SHALL CONTACT THE BERKS COUNTY CONSERVATION DISTRICT FOR A FINAL INSPECTION PRIOR TO THE REMOVAL OF THE BMP'S.
15. UPON FINAL SITE STABILIZATION, AND CONCURRENCE FROM BERKS COUNTY CONSERVATION DISTRICT, CONVERT SCM-2 INTO PERMANENT STORMWATER MANAGEMENT FACILITY ONCE AT LEAST 70 PERCENT OF THE TRIBUTARY DRAINAGE AREA IS ADEQUATELY STABILIZED BY REGRADING AND SEEDING AS NECESSARY TO ACHIEVE THE FINAL GRADES INDICATED ON THE POST CONSTRUCTION STORMWATER MANAGEMENT PLAN. **THIS IS A CRITICAL STAGE OF CONSTRUCTION AND A LICENSED PROFESSIONAL SHALL BE NOTIFIED WHEN IT IS TO OCCUR.** REMOVE ANY SEDIMENT, SCARIFY THE BASIN FLOOR, PERFORM SCM PERFORMANCE INFILTRATION TESTING AND INSTALL THE AMENDED SOIL. STABILIZE THE BASIN FLOOR IMMEDIATELY. ONCE GRASS IS ESTABLISHED THROUGHOUT THE BASIN, REMOVE DOWNSLOPE COMPOST FILTER SOCK. DO NOT PERFORM BASIN CONVERSION DURING NON-GERMINATING PERIODS. IMMEDIATELY STABILIZE AREAS DISTURBED IN THIS PHASE OF WORK BY PLACING STONE BASE OR SEED AND MULCH, AS REQUIRED.
16. ONCE PERMANENT SITE STABILIZATION IS ACHIEVED, (DEFINED AS A MINIMUM UNIFORM 90% PERENNIAL VEGETATIVE COVER OR OTHER PERMANENT NON-VEGETATIVE COVER WITH A DENSITY SUFFICIENT TO RESIST ACCELERATED SURFACE EROSION AND SUBSURFACE CHARACTERISTICS SUFFICIENT TO RESIST SLIDING AND OTHER MOVEMENTS) AND WITH CONSENT FROM THE BERKS COUNTY CONSERVATION DISTRICT REMOVE SILT SOCK, INLET PROTECTION, ETC.
17. UPON COMPLETION OF ALL EARTH DISTURBANCE ACTIVITIES, REMOVAL OF ALL TEMPORARY BMP'S, INSTALLATION OF ALL PERMANENT PCSM BMP'S, AND PERMANENT STABILIZATION OF ALL DISTURBED AREAS, THE OWNER AND OPERATORS SHALL CONTACT THE BERKS COUNTY CONSERVATION DISTRICT FOR A FINAL INSPECTION. SUBMIT A NOTICE OF TERMINATION TO THE BERKS COUNTY CONSERVATION DISTRICT FOR THE NPDES PERMIT.

SOIL LIMITATIONS AND RESOLUTIONS

1. AREAS TO BE FILLED ARE TO BE CLEARED, GRUBBED, AND STRIPPED OF TOPSOIL TO REMOVE TREES, VEGETATION, ROOTS, AND OTHER OBJECTIONABLE MATERIAL.
2. ALL FILLS SHALL BE COMPACTED AS REQUIRED TO REDUCE EROSION, SLIPPAGE, SETTLEMENT, SUBSIDENCE OR OTHER RELATED PROBLEMS. FILL INTENDED TO SUPPORT BUILDINGS, STRUCTURES, AND CONDUITS, ETC. SHALL BE COMPACTED IN ACCORDANCE WITH LOCAL REQUIREMENTS OR CODES.
3. ALL EARTHEN FILLS SHALL BE PLACED IN COMPACTED LAYERS NOT TO EXCEED 9 INCHES IN THICKNESS.
4. FILL MATERIALS SHALL BE FREE OF FROZEN PARTICLES, BRUSH, ROOTS, SOD, OR OTHER FOREIGN OR OBJECTIONABLE MATERIALS THAT WOULD INTERFERE WITH OR PREVENT CONSTRUCTION OF SATISFACTORY FILLS.
5. FROZEN MATERIALS OR SOFT, MUCKY, OR HIGHLY COMPRESSIBLE MATERIALS SHALL NOT BE INCORPORATED INTO FILLS.
6. FILL SHALL NOT BE PLACED ON SATURATED OR FROZEN SURFACES.
7. SEEPS OR SPRINGS ENCOUNTERED DURING CONSTRUCTION SHALL BE HANDLED IN ACCORDANCE WITH THE STANDARD AND SPECIFICATION FOR SUBSURFACE DRAIN OR OTHER APPROVED METHOD.

ERNST SEED MIX SPECIFICATIONS

NOTE: SPECIFICATIONS OF SEED MIXES ARE SUBJECT CHANGE AT THE DISCRETION OF ERNST CONSERVATION SEEDS, INC. CONTACT THE MANUFACTURER FOR CURRENT SEED MIX SPECIFICATIONS.

FORMULA B

- 20% PERENNIAL RYEGRASS MIXTURE (LOLIUM PERENNE). A COMBINATION OF IMPROVED CERTIFIED VARIETIES WITH NO ONE VARIETY EXCEEDING 50% OF THE TOTAL RYEGRASS COMPONENT.
- 30% CREEPING RED FESCUE OR CHEWINGS FESCUE (FESTUCA RUBRA OR SSP COMMUTATE) (IMPROVED AND CERTIFIED)
- 45% KENTUCKY BLUEGRASS MIXTURE (POA PRATENSIS). A COMBINATION OF IMPROVED CERTIFIED VARIETIES WITH NO ONE VARIETY EXCEEDING 50% OF THE TOTAL BLUEGRASS COMPONENT.
- 5% ANNUAL RYEGRASS (LOLIUM MULTIFLORUM)

NATIVE DETENTION AREA MIX – ERNMX-183

- 25.0% PANICUM VIRGATUM, 'SHELTER' (SWITCHGRASS, SHELTER)
- 24.0% PANICUM CLANDESTINUM, 'TIOGA' (DEERTONGUE, 'TIOGA')
- 22.0% CAREX VULPINOIDEA, PA ECOTYPE (FOX SEDGE, PA ECOTYPE)
- 21.0% ELYMUS VIRGINICUS, PA ECOTYPE (VIRGINIA WILDRYE, PA ECOTYPE)
- 6.0% AGROSTIS PERENNIANS, ALBANY PINE BUSH-NY ECOTYPE (AUTUMN BENTGRASS, ALBANY PINE BUSH – NY ECOTYPE)
- 1.0% JUNCUS EFFUSUS (SOFT RUSH)
- 1.0% PANICUM RIGIDULUM, PA ECOTYPE (REDTOP PANICGRASS, PA ECOTYPE)

DUE DILIGENCE NOTES

1. THE CONTRACTOR WILL BE RESPONSIBLE FOR THE REMOVAL OF ANY EXCESS MATERIAL AND MAKE SURE THE SITE(S) RECEIVING THE EXCESS HAS AN APPROVED AND FULLY IMPLEMENTED EROSION AND SEDIMENT CONTROL PLAN THAT MEETS THE CONDITIONS OF CHAPTER 102 AND/OR OTHER STATE OR FEDERAL REGULATIONS.
2. CLEAN FILL IS DEFINED AS: UNCONTAMINATED, NON-WATER SOLUBLE, NON-DECOMPOSABLE, INERT, SOLID MATERIAL. THE TERM INCLUDES SOIL, ROCK, STONE, DREDGED MATERIAL, USED ASPHALT, AND BRICK, BLOCK OR CONCRETE FROM CONSTRUCTION AND DEMOLITION ACTIVITIES THAT IS SEPARATE FROM OTHER WASTE AND IS RECOGNIZABLE AS SUCH. THE TERM DOES NOT INCLUDE MATERIALS PLACED IN OR ON THE WATERS OF THE COMMONWEALTH UNLESS OTHERWISE AUTHORIZED. (THE TERM 'USED ASPHALT' DOES NOT INCLUDE MILLED ASPHALT OR ASPHALT THAT HAS BEEN PROCESSED FOR RE-USE.).
3. THE CONTRACTOR IS RESPONSIBLE FOR ENSURING THAT ANY MATERIAL BROUGHT ON SITE IS CLEAN FILL. ANY PLACEMENT OF CLEAN FILL THAT HAS BEEN AFFECTED BY A SPILL OR RELEASE OF A REGULATED SUBSTANCE MUST USE FORM FP-001 TO CERTIFY THE ORIGIN OF THE FILL MATERIAL AND THE RESULTS OF THE ANALYTICAL TESTING TO QUALIFY THE MATERIAL AS CLEAN FILL. FORM FP-001 MUST BE RETAINED BY THE OWNER OF THE PROPERTY RECEIVING THE FILL.
4. ENVIRONMENTAL DUE DILIGENCE MUST BE PERFORMED TO DETERMINE IF THE FILL MATERIALS ASSOCIATED WITH THEM PROJECT QUALIFY AS CLEAN FILL. ENVIRONMENTAL DUE DILIGENCE IS DEFINED AS: INVESTIGATIVE TECHNIQUES, INCLUDING, BUT NOT LIMITED TO, VISUAL PROPERTY INSPECTIONS, ELECTRONIC DATA BASE SEARCHES, REVIEW OF PROPERTY OWNERSHIP, REVIEW OF PROPERTY USE HISTORY, SANBORN MAPS, ENVIRONMENTAL QUESTIONNAIRES, TRANSACTION SCREENS, ANALYTICAL TESTING, ENVIRONMENTAL ASSESSMENTS OR AUDITS. ANALYTICAL TESTING IS NOT A REQUIRED PART OF DUE DILIGENCE UNLESS VISUAL INSPECTION AND/OR REVIEW OF THE PAST LAND USE OF THE PROPERTY INDICATES THAT THE FILL MAY HAVE BEEN SUBJECTED TO A SPILL OR RELEASE OF A REGULATED SUBSTANCE. IF THE FILL MAY HAVE BEEN AFFECTED BY A SPILL OR RELEASE OF A REGULATED SUBSTANCE, IT MUST BE TESTED TO DETERMINE IF IT QUALIFIES AS CLEAN FILL. TESTING SHOULD BE PERFORMED IN ACCORDANCE WITH APPENDIX A OF THE DEPARTMENT'S POLICY 'MANAGEMENT OF CLEAN FILL.'

CRITICAL STAGES OF IMPLEMENTATION OF PCSM PLAN

THE CONTRACTOR IS RESPONSIBLE TO CONTACT THE DESIGN ENGINEER AND THE TOWNSHIP PRIOR TO INITIATING THE CONSTRUCTION OF THESE STAGES SO THAT ADEQUATE INSPECTION CAN OCCUR IN ORDER TO PROVIDE THE FINAL CERTIFICATIONS. THE FOLLOWING LIST IDENTIFIES THE CRITICAL STAGES OF IMPLEMENTATION OF THE PCSM PLAN FOR WHICH A LICENSED PROFESSIONAL OR DESIGNEE MUST BE PRESENT ON SITE. MUNICIPAL ENGINEER SHOULD BE CONTACTED 24 HOURS IN ADVANCE OF COMPLETION OF EACH PHASE.

SURFACE BASIN (SCM-1)

CRITICAL STAGE INSPECTION SHOULD INCLUDE BUT NOT LIMITED TO INSTALLATION OF HEADWALL ORIFICE AND OUTLET STRUCTURE.

SURFACE BASIN (SCM-2)

CRITICAL STAGE INSPECTIONS FOR SURFACE BASINS SHOULD INCLUDE BUT BE NOT LIMITED TO: ROUGH GRADING/EXCAVATION OF SCM; CONSTRUCTION OF BASIN BERMS; END WALL; INSTALLATION OF INFLOW PIPES; OVER EXCAVATION TO REACH THE BOTTOM OF THE AMENDED SOIL ELEVATION; INFILTRATION TESTING, INSTALLATION OF AMENDED SOILS; SEEDING AND PLANTING INSTALLATIONS; INSPECTION OF UPSTREAM CATCH BASINS TO ENSURE ANY AND ALL SEDIMENT HAS BEEN WASHED OUT OF PIPE SYSTEM; REMOVAL OF CATCH BASIN DRAINAGE PREVENTION DEVICE.

SURFACE BED (SCM-3)

CRITICAL STAGE INSPECTIONS FOR BEDS SHOULD INCLUDE BUT NOT BE LIMITED TO: ROUGH EXCAVATION OF SCM; INFILTRATION TESTING; INSTALLATION OF FILTER FABRIC (ON BOTTOM, SIDES AND ENDS); INSTALLATION OF STONE BASE LAYER; INSTALLATION OF OUTLET STRUCTURE AND OUTLET PIPE; PIPE OUTLET BMP; INSTALLATION OF INFLOW PIPES (PIPE SHOULD BE PREVENTED FROM DRAINING INTO BED UNTIL FACILITY IS COMPLETE); INSTALLATION OF CHAMBERS, PIPE NETWORK OR STONE FOR SCM FACILITY; INSTALLATION OF FILTER FABRIC OVER TOP OF STONE; INSPECTION OF UPSTREAM CATCH BASINS TO ENSURE ANY AND ALL SEDIMENT HAS BEEN WASHED OUT OF PIPE SYSTEM; REMOVAL OF CATCH BASIN DRAINAGE PREVENTION DEVICE.

BMP PERFORMANCE TESTING

1. IN ACCORDANCE WITH NPDES PERMIT REQUIREMENTS THE CONTRACTOR IS REQUIRED TO CONTACT THE GEOTECHNICAL ENGINEER TO PERFORM INFILTRATION TESTING TO ENSURE THE BMP PERFORMS TO THE DESIGN STANDARD LISTED BELOW.
2. TESTING SHOULD OCCUR AS INDICATED IN THE SEQUENCE FOR INDIVIDUAL BMP CONSTRUCTION.
3. THE ENGINEER SHALL PERFORM THE REQUIRED NUMBER OF TESTS AT EACH BMP AS SHOWN BELOW AND ENSURE THE AVERAGE OF THE TEST RESULTS MEET THE REQUIRED INFILTRATION RATES.
4. IF THE TEST RESULTS DO NOT MEET THE MINIMUM REQUIRED INFILTRATION RATE, THE CONTRACTOR SHALL BE REQUIRED TO MAKE FURTHER IMPROVEMENTS AS DIRECTED BY THE ENGINEER. RETESTING OF THE INFILTRATION RATE WILL BE REQUIRED BY THE ENGINEER FOLLOWING ANY SOIL AMENDMENT OR RESTORATION ACTIVITY.
5. THIS PROJECT INCLUDES INFILTRATION FACILITIES DESIGNED TO INFILTRATE STORMWATER INTO THE GROUND. CONTRACTOR SHALL PROTECT ALL PROPOSED INFILTRATION FACILITIES FROM EROSION, SEDIMENTATION AND COMPACTION DURING CONSTRUCTION. INFILTRATION TESTING WAS CONDUCTED BY DAVID BLACKMORE & ASSOCIATES, INC.(DBA) AND DESIGN INFILTRATION RATES WERE DETERMINED BASED UPON THE TEST RESULTS. THE CONTRACTOR IS RESPONSIBLE TO CONSTRUCT THE INFILTRATION FACILITIES TO ACHIEVE THE FOLLOWING DESIGN INFILTRATION RATES:

SUBSURFACE INFILTRATION BED (SCM-3): 1.10 IN/HR

INFILTRATION BASIN (SCM-2): 0.71 IN/HR

SOILS TABLE - NRCS SOIL SURVEY

SOIL TYPE	HYDROLOGIC SOIL GROUP	AVG. SLOPE
AsB – Athol silt Loam	B	3-8%
UgB – Urban Land	N/A	0-8%

SOIL LIMITATIONS

SOIL NAME	CUTBACKS CAVE	CORROSIVE TO CONCRETE \ STEEL	DROUGHTY	EASILY ERODIBLE	FLOODING	DEPTH TO SATURATED ZONE \ SEASONAL HIGH WATER TABLE	HYDRIC\HYDRIC INCLUSIONS	LOW STRENGTH \ LANDSLIDE PRONE	SLOW PERCOLATION	PIPING	POOR SOURCE OF TOPSOIL	FROST ACTION	SHRINK-SWELL	POTENTIAL SINKHOLE	PONDING	WETNESS
ATHOL	X	C							X	X	X	X				
URBAN						X						X				

SOIL LIMITATION RESOLUTIONS

LIMITATION	RESOLUTION
CUTBANKS CAVE	CONDUCT TRENCHING OPERATIONS IN ACCORDANCE WITH OSHA TECHNICAL MANUAL FOR TRENCHING. STABILIZE BANKS IMMEDIATELY WITH SEED, MULCH, EROSION CONTROL MATS, BONDED FIBER MATRIX, OR A COMBINATION OF THESE AND/OR OTHER METHODS.
CORROSIVE TO CONCRETE OR STEEL	PROTECT CONCRETE AND STEEL WITH PROTECTIVE COATINGS, SELECT ALTERNATIVE MATERIALS IN LIEU OF CONCRETE OR STEEL, OR A COMBINATION OF THESE AND OR OTHER METHODS.
DROUGHTY	SELECT VEGETAIVE SPECIES TOLERANT TO DRY CONDITIONS, IRRIGATE VEGETATED AREAS, OR IMPLEMENT COMBINATIONS OF THESE AND/OR OTHER METHODS.
EASILY ERODIBLE	PROVIDE TEMPORARY OR PERMANENT CHANNEL LINING, DECREASE CHANNEL GRADE, INCREASE CHANNEL WIDTH, SELECT VEGETATION WITH A GREATER RETARDANCE, SELECT PERMANENT LININGS OTHER THAN GRASSES, OR IMPLEMENTING COMBINATIONS OF THESE AND/OR OTHER METHODS.
HYDRIC SOILS	SELECT VEGETATIVE SPECIES TOLERANT TO WET CONDITIONS, TILE VEGETATED AREAS, OR IMPLEMENT COMBINATIONS OF THESE AND/OR OTHER METHODS. UTILIZE PUMPED WATER FILTER BAGS TO DEWATER DISTURBED ARES DURING CONSTRUCTION.
LOW STRENGTH \ LANDSLIDE PRONE	LOCATE ROADWAYS TO OTHER SOIL TYPESS, IMPORT OTHER SOILS FOR THESE ROADWAY CONSTRUCTION, OR IMPLEMENT A COMBINATION OF THESE AND/OR OTHER METHODS. FOR CUT/FILL SLOPES, REDUCE SLOPE, INSTALL EROSION CONTROL MATTING, OR IMPLEMENT A COMBINATION OF THESE AND/OR OTHER METHODS.
SLOW PERCOLATION	LOCATE INFILTRATION FACILITIES TO ANOTHER SOIL TYPE, RESTRICT CONSTRUCTION TRAFFIC AT THOSE LOCATIONS, TILL SOIL IN THOSE LOCATIONS, ADD SOIL AMENDMENTS SUCH AS COMPOST AT THOSE LOCATIONS.
PIPING	IMPORT OTHER SOIL FOR EMBANKMENTS OF SEDIMENT BASINS, SEDIMENT TRAPS, STORM WATER RETENTION BASINS AND STORM WATER DETENTION BASINS, LOCATE THOSE FACILITIES ON OTHER SOIL TYPES, LIMIT EMBANKMENT SLOPE STEEPNESS, OR IMPLEMENT COMBINATIONS OF THESE AND/OR OTHER METHODS.
POOR SOURCE OF TOPSOIL	IDENTIFY AND RESOLVE CHARACTERISTICS THAT RENDER THE SOIL TYPES POORLY SUITED AS TOPSOIL. PERFORM SOIL TESTS TO DETERMINE THE REQUIRED SOIL AMENDMENTS AND APPLICATION RATES. IDENTIFY SOILS ON-SITE THAT ARE ADEQUATE SOURCES OF TOPSOIL AND STOCKPILE THESE FOR USE DURING RESTORATION.
FROST ACTION	IMPORT OTHER SOIL FOR EMBANKMENTS OF SEDIMENT BASINS, SEDIMENT TRAPS, STORM WATER RETENTION BASINS AND STORM WATER DETENTION BASINS, LOCATE THOSE FACILITIES ON OTHER SOIL TYPES, DO NOT CONSTRUCT EMBANKMENTS DURING PERIODS PRONE TO FROST, OR IMPLEMENT COMBINATIONS OF THESE AND/OR OTHER METHODS.

SEEDING SCHEDULE

APPLICATION	TOPSOIL PLACEMENT DEPTH	SPECIES	% PURE LIVE SEED	SEEDING APPLICATION RATE	* FERTILIZER TYPE	* FERTILIZER APPLICATION RATE	* LIMING RATE	MULCH TYPE	MULCHING RATE	ANCHOR MATERIAL	ANCHOR METHOD	RATE OF ACHOR MATERIAL APPLICATION	SEEDING DATES
TEMPORARY	N/A	FORMULA E (ANNUAL RYEGRASS)	PER PENNDOT 408 SPECS	10 LB/1000 SY	10-10-20 FERTILIZER	25 LB/1000 SF	2480 LB/1000 SY	STRAW	3 T/AC	WOOD FIBER	TACKTIFIERS (2.5-3.5% BY WEIGHT)	2000 LB/AC	3/15 TO 10/15
MAINTAINED LAWN, <3:1 SLOPES	6" ±1"	PENN



HERBERT, ROWLAND & GRUBIC, INC.
1275 GLENLIVET DRIVE
SUITE 145
ALLENTOWN, PA 18106
610.351.0311 | hrg-inc.com

POST CONSTRUCTION STORMWATER MANAGEMENT PLAN
FOR
EMERGENCY SERVICES CENTER
EXETER TOWNSHIP
4975 DEMOSS ROAD
READING, PA 19606
EXETER TOWNSHIP, BERKS COUNTY, PENNSYLVANIA

PROFESSIONAL SEAL:

HRG PROJECT NUMBER: R006367.0427
PLAN DATE: 04/01/2026
DRAWING SCALE: 1"=60'
PROJ. MANAGER: DENNIS REICHEL

REVISIONS

NO.	DATE	DESCRIPTION
1	2026.04.14	REV. AS PER 04/09/2026 BCCD COMMENTS
2	2026.04.23	REV. AS PER 04/17/2026 BCCD COMMENTS
3	2026.05.15	REV. AS PER 05/11/2026 BCCD COMMENTS
4	2026.10.01	FIELD CHANGE/BID SET
5		
6		
7		
8		
9		

SHEET TITLE:
OVERALL BOUNDARY PLAN

SHEET: OVAL 03

MW STUDIOS
ARCHITECTURE + MASTER PLANNING
8098 SANDPIPER CIR, SUITE
NOTTINGHAM, MD 21236
410-344-1460
INFO@MWSARCH.COM
WWW.MWSARCH.COM

CONSULTANT:

HERBERT, ROWLAND & GRUBIC, INC.
1275 GLENLIVET DRIVE
SUITE 145
ALLENTOWN, PA 18106
610.351.0311 | hrg-inc.com

SEAL:

COMMONWEALTH OF PENNSYLVANIA
REGISTERED PROFESSIONAL
DENNIS J. REICHEL
ENGINEER NO. PE070767
04/01/2026

EXETER TOWNSHIP
EMERGENCY SERVICES FACILITY
70 GIBRALTER ROAD
READING, PA 19606

PROJECT NUMBER:
25-049

SUBMISSION:
BID SET

ORIGINAL ISSUE DATE:
10/01/2026

SHEET REVISION SCHEDULE:
No. DATE

REFERENCE PLAN

SHEET NUMBER:
C203

ALL DRAWINGS ARE PROTECTED BY FEDERAL COPYRIGHT BY MANNS WOODWARD STUDIOS, INC. AND CAN NOT BE REPRODUCED OR MODIFIED IN ANY MANNER WITHOUT WRITTEN PERMISSION. DOCUMENTS MAY NOT BE USED IN PART OR WHOLE TO DEVELOP THE DESIGN OF ANOTHER BUILDING WITHOUT EXPRESS WRITTEN PERMISSION BY MANNS WOODWARD STUDIOS.

MW STUDIOS
ARCHITECTURE + MASTER PLANNING
8098 SANDPIPER CIR, SUITE
NOTTINGHAM, MD 21236
☎ 410-344-1460
✉ INFO@MWSARCH.COM
WWW.MWSARCH.COM

CONSULTANT:

HERBERT, ROWLAND & GRUBIC, INC.
1275 GLENLIVET DRIVE
SUITE 145
ALLENTOWN, PA 18106
610.351.0311 | hrg-inc.com

SEAL:

COMMONWEALTH OF PENNSYLVANIA
REGISTERED PROFESSIONAL
DENNIS J REICHEL
ENGINEER NO. PE070767
10/01/2026

EXETER TOWNSHIP EMERGENCY SERVICES FACILITY 70 GIBRALTER ROAD READING, PA 19606

PROJECT NUMBER:
25-049

SUBMISSION:
100% CD

ORIGINAL ISSUE DATE:
10/01/2026

SHEET REVISION SCHEDULE:

No.	DATE

REFERENCE PLAN

SHEET NUMBER:

C204

HERBERT, ROWLAND & GRUBIC, INC.
1275 GLENLIVET DRIVE
SUITE 145
ALLENTOWN, PA 18106
610.351.0311 | hrg-inc.com

POST CONSTRUCTION STORMWATER MANAGEMENT PLAN FOR EMERGENCY SERVICES CENTER

EXETER TOWNSHIP
4975 DEMOSS ROAD
READING, PA 19606

EXETER TOWNSHIP, BERKS COUNTY, PENNSYLVANIA

GRAPHIC SCALE
30' 15' 0' 30'
SCALE: 1" = 30'

PROFESSIONAL SEAL:

HRG PROJECT NUMBER: R006367.0427
PLAN DATE: 04/01/2026
DRAWING SCALE: AS SHOWN
PROJ. MANAGER: DENNIS REICHEL

REVISIONS

NO.	DATE	DESCRIPTION
1	2026.04.14	REV AS PER 04/09/2026 BCCD COMMENTS
2	2026.04.23	REV AS PER 04/16/2026 BCCD COMMENTS
3	2026.05.15	REV AS PER 05/11/2026 BCCD COMMENTS
4	2026.10.01	FIELD CHANGE/BID SET
5		
6		
7		
8		
9		

SHEET TITLE:
EXISTING CONDITIONS

SHEET: EC-1 | 04

ALL DRAWINGS ARE PROTECTED BY FEDERAL COPYRIGHT BY MANNS WOODWARD STUDIOS, INC. AND CAN NOT BE REPRODUCED OR MODIFIED IN ANY MANNER WITHOUT WRITTEN PERMISSION. DOCUMENTS MAY NOT BE USED IN PART OR WHOLE TO DEVELOP THE DESIGN OF ANOTHER BUILDING WITHOUT EXPRESS WRITTEN PERMISSION BY MANNS WOODWARD STUDIOS.

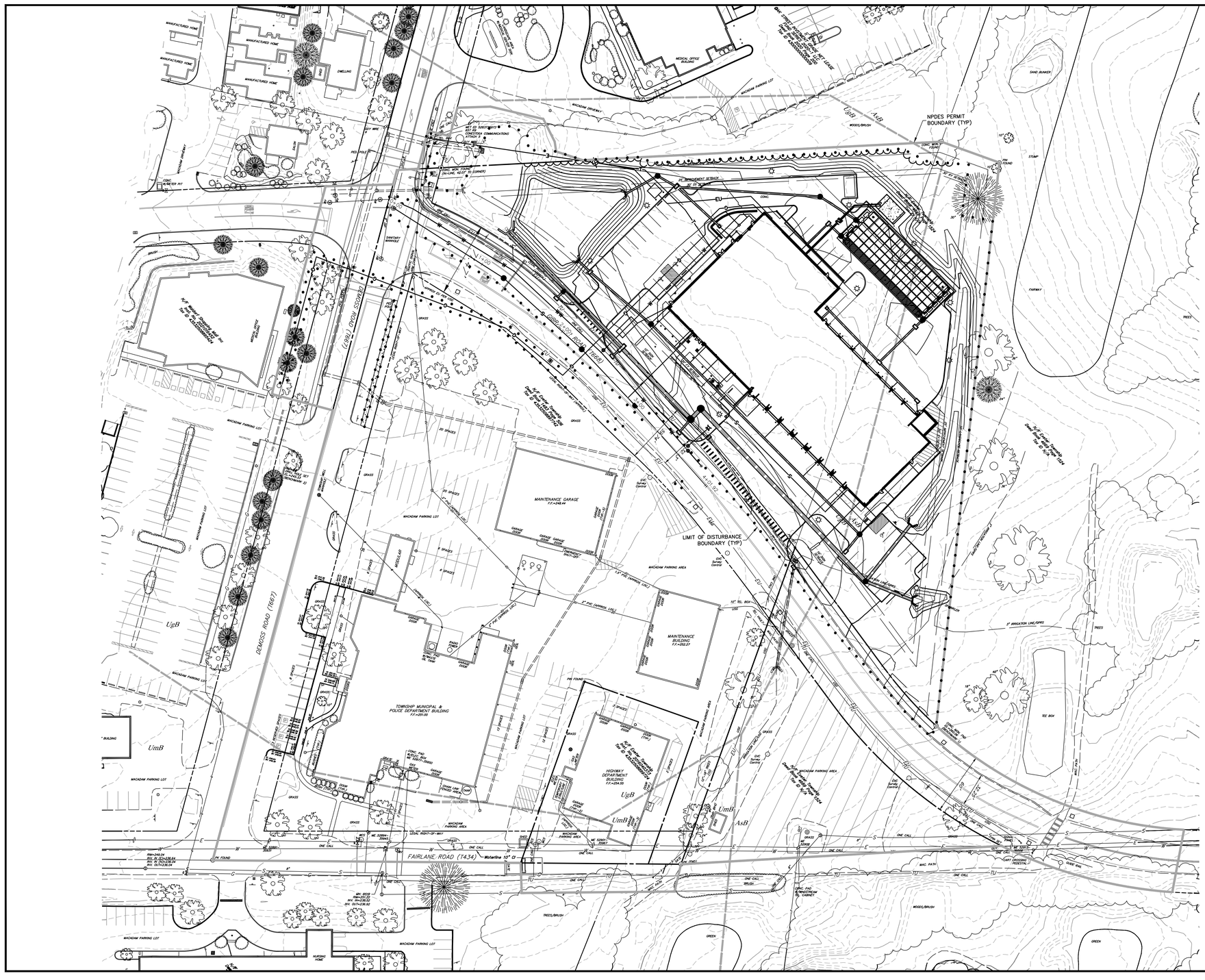

HRG
HERBERT, ROWLAND & GRUBIC, INC.
1275 GLENLIVET DRIVE
SUITE 145
ALLENTOWN, PA 18106
610.351.0311 | hrg-inc.com

POST CONSTRUCTION STORMWATER MANAGEMENT PLAN
FOR
EMERGENCY SERVICES CENTER

EXETER TOWNSHIP
4975 DEMOSS ROAD
READING, PA 19606

EXETER TOWNSHIP, BERKS COUNTY, PENNSYLVANIA

PROFESSIONAL SEAL:

HRG PROJECT NUMBER: R006367.0427
PLAN DATE: 04/01/2026
DRAWING SCALE: 1"=40'
PROJ. MANAGER: DENNIS REICHEL

REVISIONS

NO.	DATE	DESCRIPTION
1	2026.04.14	REV AS PER 04/09/2026 BCCD COMMENTS
2	2026.04.23	REV AS PER 04/17/2026 BCCD COMMENTS
3	2026.05.15	REV AS PER 05/11/2026 BCCD COMMENTS
4	2026.10.01	FIELD CHANGE/BID SET
5		
6		
7		
8		
9		

SHEET TITLE:
OVERALL GRADING & PCSM PLAN

SHEET: GR-OA 05

MW STUDIOS
ARCHITECTURE + MASTER PLANNING
8098 SANDPIPER CIR, SUITE
NOTTINGHAM, MD 21236
☎ 410-344-1460
✉ INFO@MWSARCH.COM
WWW.MWSARCH.COM

CONSULTANT:

HRG
HERBERT, ROWLAND & GRUBIC, INC.
1275 GLENLIVET DRIVE
SUITE 145
ALLENTOWN, PA 18106
610.351.0311 | hrg-inc.com

SEAL:

COMMONWEALTH OF PENNSYLVANIA
REGISTERED PROFESSIONAL
DENNIS J. REICHEL
ENGINEER NO. PE070787
10/01/2026

EXETER TOWNSHIP
EMERGENCY SERVICES FACILITY
70 GIBRALTER ROAD
READING, PA 19606

PROJECT NUMBER:
25-049

SUBMISSION:
BID SET

ORIGINAL ISSUE DATE:
10/01/2026

SHEET REVISION SCHEDULE:
No. DATE

REFERENCE PLAN

SHEET NUMBER:

C205

ALL DRAWINGS ARE PROTECTED BY FEDERAL COPYRIGHT BY MANNS WOODWARD STUDIOS, INC. AND CAN NOT BE REPRODUCED OR MODIFIED IN ANY MANNER WITHOUT WRITTEN PERMISSION. DOCUMENTS MAY NOT BE USED IN PART OR WHOLE TO DEVELOP THE DESIGN OF ANOTHER BUILDING WITHOUT EXPRESS WRITTEN PERMISSION BY MANNS WOODWARD STUDIOS.