GENERAL LIGHTING NOTES

A. ALL LIGHTING FIXTURES SHALL BE FED FROM A JUNCTION BOX WITH 6' WHIPS.

B. E.C. SHALL COORDINATE MOUNTING HEIGHTS OF ALL LIGHTS AND EXIT SIGNS IN FIELD WITH CEILING TYPES AND ARCHITECTURAL DRAWINGS.

C. ALL ROOM CONTROLLERS AND OCCUPANCY SENSORS SHALL BE SET FOR 20 MIN. MAX VACANCY TIME.

D. ALL EXIT SIGNS SHALL BE FED UNSWITCHED FROM THE NEAREST LOCAL LIGHTING CIRCUIT IN AREA IN WHICH FIXTURE IS SERVING.

E. ALL WIRING SHOWN DASHED FROM ROOM CONTROLLERS REPRESENT LOW VOLTAGE CAT-6 WIRING. ALL DARK SOLID LINES SHOWN FROM ROOM CONTROLLERS REPRESENTS LINE VOLTAGE SWITCH LEGS. IF MULTIPLE SWITCH LEGS ARE SHOWN FROM ROOM CONTROLLER EACH IS FED FROM A SEPARATE RELAY INTEGRAL TO THE CONTROLLER, AS SUCH, EACH RELAY SHALL BE CONTROLLED BY IT'S OWN MANUAL CONTROL DEVICE, IF PRESENT IN THE AREA, AND SHALL BE PROGRAMMED TO BE OVERALL CONTROLLED BY THE OCCUPANCY SENSOR AS SHOWN IN LIGHTING CONTROL SCHEDULE.

F. E.C. SHALL REFER TO LIGHTING CONTROL WIRING DIAGRAMS ON DRAWING E000 FOR ADDITIONAL LIGHTING CONTROL INFORMATION.

G. ALL LIGHTING INSTALLED IN PATHS OF EGRESS THAT ARE CONTROLLED BY OCCUPANCY SENSORS SHALL HAVE A FIRE ALARM CONTROL MODULE FURNISHED, INSTALLED, AND WIRED INTO THE LIGHTING CONTROLLER TO AUTOMATICALLY PUSH LIGHTING TO 100% ON IN EVENT OF FIRE ALARM SYSTEM ACTIVATION. E.C. SHALL FURNISH AND INSTALL AN ADDITIONAL RCSP DEVICE TO INTERFACE BETWEEN THE LIGHTING CONTROL SYSTEM AND FIRE ALARM SYSTEM INPUT. E.C. SHALL INSTALL ALL WIRING AND DEVICES PER MANUFACTURER'S WRITTEN INSTALLATION INSTRUCTIONS.

H. ROOM CONTROLLERS ARE SHOWN IN THEIR LOCATIONS FOR CIRCUITING CLARITY. E.C. SHALL FURNISH AND INSTALL ALL ROOM CONTROLLERS IN EASILY ACCESSIBLE LOCATION ABOVE CEILING.

J. ALL LOCATIONS SHOWN WITH MULTIPLE SWITCHES SHALL BE INSTALLED IN A MULTI-GANG BOX FOR QUANTITY OF DEVICES AS SHOWN ON PLANS. E.C. SHALL COORDINATE ALL LOCATIONS AND QUANTITIES WITH ELECTRICAL AND ARCHITECTURAL DRAWINGS.

KEYNOTES

1. E.C. SHALL FURNISH AND INSTALL UNDER CABINET LIGHTING WITH ALL ASSOCIATED TRANSFORMERS AND CONTROLLERS AS REQUIRED. E.C. SHALL COORDINATE EXACT LOCATIONS AND LENGTHS IN FIELD WITH MILLWORK AND ARCHITECTURAL DRAWINGS PRIOR TO COMMENCEMENT OF NEW WORK.
2. E.C. SHALL FURNISH AND INSTALL LIGHT FIXTURES IN EXPOSED CEILING AREAS AT 9'-0" A.F.F. UNLESS OTHERWISE NOTED. E.C. SHALL COORDINATE EXACT LOCATIONS AND HEIGHTS WITH OTHER TRADES, ARCHITECTURAL DRAWINGS, AND OWNER'S REPRESENTATIVE PRIOR TO COMMENCEMENT OF NEW WORK.
3. E.C. SHALL FURNISH AND INSTALL LIGHTING ALONG THE UNDERSIDE OF TOE KICK WITH ALL ASSOCIATED TRANSFORMERS AND CONTROLLERS AS REQUIRED. E.C. SHALL TIE IN LIGHTING CONTROL TO FIRE STATION ALERTING SYSTEM AS REQUIRED AND COORDINATED WITH FIRE ALARM CONTRACTOR AND OWNER'S REPRESENTATIVE PRIOR TO COMMENCEMENT OF NEW WORK. E.C. SHALL COORDINATE EXACT LOCATIONS AND LENGTHS IN FIELD WITH MILLWORK AND ARCHITECTURAL DRAWINGS PRIOR TO COMMENCEMENT OF NEW WORK.

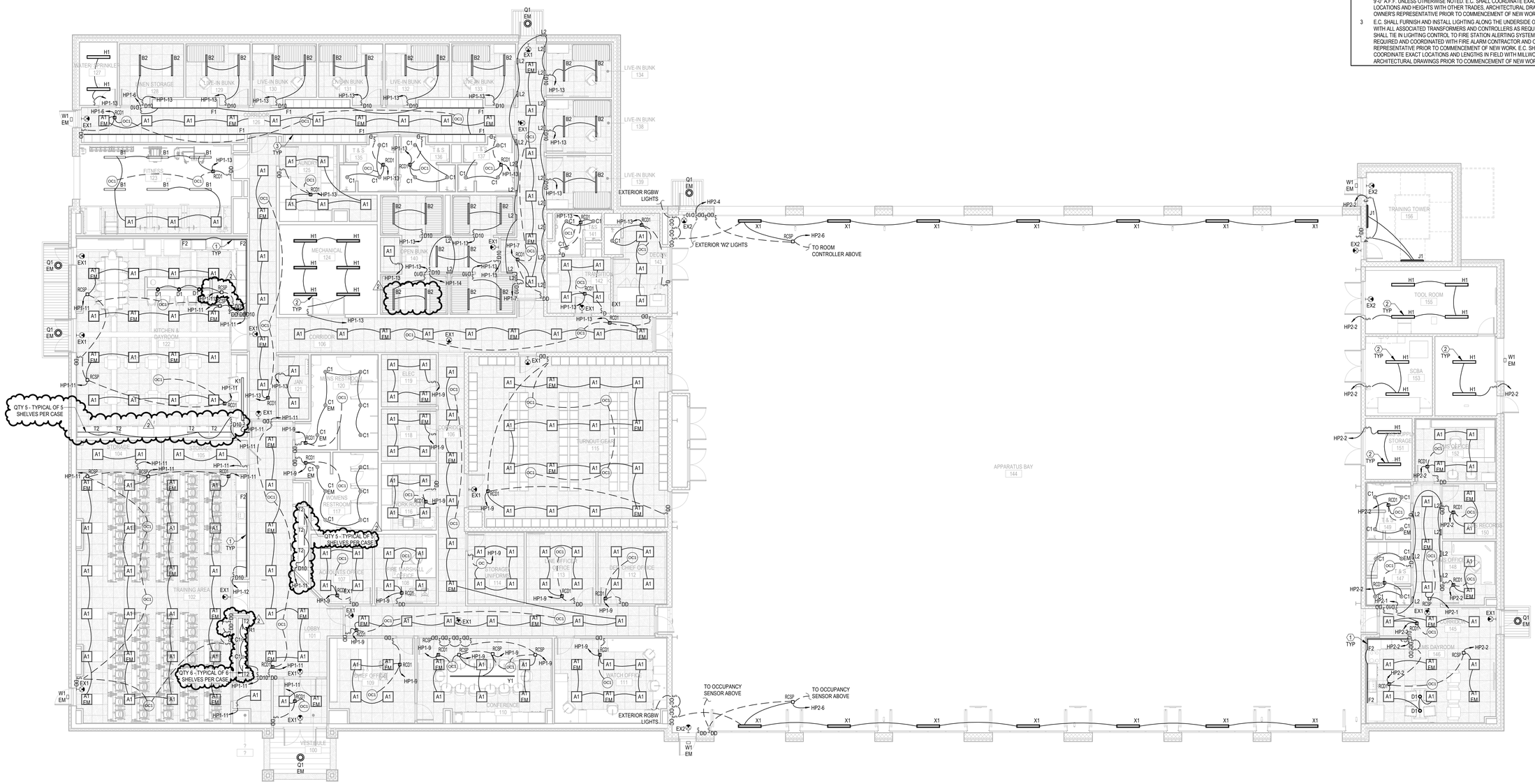

1 FIRST FLOOR LIGHTING PLAN
1/8" = 1'-0"

ALL DRAWINGS ARE PROTECTED BY FEDERAL COPYRIGHT BY MANNS WOODWARD STUDIOS, INC. AND CAN NOT BE REPRODUCED OR MODIFIED IN ANY MANNER WITHOUT WRITTEN PERMISSION. DOCUMENTS MAY NOT BE USED IN PART OR WHOLE TO DEVELOP THE DESIGN OF ANOTHER BUILDING WITHOUT EXPRESS WRITTEN PERMISSION BY MANNS WOODWARD STUDIOS.

MW STUDIOS
ARCHITECTURE + MASTER PLANNING
8098 SANDPIPER CIR, SUITE H
NOTTINGHAM, MD 21236
410-344-1460
INFO@MWSARCH.COM
WWW.MWSARCH.COM

CONSULTANT:

DEDC
ENGINEERED DESIGN CONSULTING
Delaware
212 S. Chapel Street
Newark, DE 19711
Phone
302.738.7172
Fax
302.738.7175
www.dedc-eng.com
Pennsylvania
Donna Morris Plaza
30 S. 17th Street
Suite 820
Philadelphia, PA 19103
Phone
267.804.7286

SEAL:

COMMONWEALTH OF PENNSYLVANIA
REGISTERED PROFESSIONAL
SCOTT W. FRENCH
ENGINEER
PE084137

EXETER TOWNSHIP
EMERGENCY SERVICES FACILITY
70 GIBRALTAR ROAD
READING PA 19606

PROJECT NUMBER: 25-049

SUBMISSION:
BID SET

ORIGINAL ISSUE DATE:
10/01/2026

SHEET REVISION SCHEDULE:

No.	DATE
1	10/15/26
2	10/22/26

LAST PROJECT REVISION: No 2 | 10/22/26

FIRST FLOOR LIGHTING PLAN

SHEET NUMBER:

E301

10/23/2026 11:16:07 AM

KEYNOTES

1 ELECTRICAL CONTRACTOR SHALL FURNISH AND INSTALL FLUSH MOUNTED SINGLE GANG NEMA 5-20R DUPLEX RECEPTACLE AND SINGLE GANG 4-PORT DATA JACK AT DISPLAYS.

GENERAL ALERTING NOTES

A E.C. SHALL COORDINATE ALL DEVICE LOCATIONS IN FIELD WITH ALERTING SYSTEM DRAWING AND OTHER TRADES BEFORE WORK COMMENCES.

B E.C. SHALL REFER TO DRAWING E-001 FOR LEGEND INFORMATION.

C PROVIDE CUTTING, PATCHING, AND RESTORATION OF FINISHES NECESSARY FOR WORK SURFACES DAMAGED BY THIS WORK. SPACES AROUND CONDUITS PASSING THROUGH FLOORS AND WALLS SHALL BE NEATLY PATCHED AND FINISHED TO MATCH NEW/EXISTING. STRUCTURAL MEMBERS SHALL NOT BE CUT OR PENETRATED IN ANY MANNER. THE SPACES AROUND THE CONDUITS SHALL BE SEALED TO PREVENT ENTRANCE OF MOISTURE. PROVIDE FIRE STOPPING PER UL APPROVED METHODS.

D ALL WIRING DEVICES SHOWN ON BLOCK WALLS SHALL BE FURNISHED AND INSTALLED RECESSED FLUSH WITH BLOCK WALL. ALL CONDUITS AND WIRING FEEDING DEVICES SHALL BE INSTALLED IN HOLLOW OF BLOCK WALL. E.C. SHALL COORDINATE ALL WORK WITH MASONS BEFORE CONSTRUCTION COMMENCES.

E E.C. SHALL ENSURE ALL LOW-VOLTAGE CABLE THAT CROSSES ANY EXPOSED CEILING SHALL BE INSTALLED IN EMT.

F REFER TO ALERTING SYSTEMS DRAWINGS FOR ALL ALERTING SYSTEM BOX SIZES, CONDUIT SIZES, EQUIPMENT DIMENSIONS, AND SUPPLEMENTAL INFORMATION TO MAKE ALL PATHWAYS READY FOR ALERTING SYSTEM VENDOR INSTALLATION.

G E.C. SHALL COORDINATE ALL INSTALLATION LOCATIONS AND QUANTITIES WITH OWNER'S ALERTING SYSTEM VENDOR PRIOR TO COMMENCEMENT OF WORK.



1 FIRST FLOOR ALERTING SYSTEMS PLAN

1/8" = 1'-0"

ALL DRAWINGS ARE PROTECTED BY FEDERAL COPYRIGHT BY MANNS WOODWARD STUDIOS, INC. AND CAN NOT BE REPRODUCED OR MODIFIED IN ANY MANNER WITHOUT WRITTEN PERMISSION. DOCUMENTS MAY NOT BE USED IN PART OR WHOLE TO DEVELOP THE DESIGN OF ANOTHER BUILDING WITHOUT EXPRESS WRITTEN PERMISSION BY MANNS WOODWARD STUDIOS.

MW STUDIOS
ARCHITECTURE + MASTER PLANNING
8098 SANDPIPER CIR, SUITE H
NOTTINGHAM, MD 21236
☎ 410-344-1460
INFO@MWSARCH.COM
WWW.MWSARCH.COM

CONSULTANT:

DEDC
ENGINEERING | DESIGN | CONSULTING
Delaware
212 S. Chapel Street
Newark, DE 19711
Phone
302.738.7172
Fax
302.738.7175
www.dedc-eng.com
Pennsylvania
Donna Morris Plaza
30 S. 17th Street
Suite 820
Philadelphia, PA 19103
Phone
267.804.7286

SEAL:

COMMONWEALTH OF PENNSYLVANIA
REGISTERED PROFESSIONAL
SCOTT W. FRENCK
ENGINEER
PE084132

EXETER TOWNSHIP
EMERGENCY SERVICES FACILITY
70 GIBRALTAR ROAD
READING PA 19606

PROJECT NUMBER: 25-049

SUBMISSION:
BID SET

ORIGINAL ISSUE DATE:
10/01/2026

SHEET REVISION SCHEDULE:

No.	DATE
2	10/22/26

LAST PROJECT REVISION: No 2 | 10/22/26

FIRST FLOOR ALERTING PLAN

SHEET NUMBER:

E401

10/23/2026 11:16:16 AM

KEYNOTES

1. ELECTRICAL CONTRACTOR SHALL FURNISH AND INSTALL FLUSH MOUNTED SINGLE GANG NEMA 5-20R DUPLEX RECEPTACLE AND SINGLE GANG 4-PORT DATA JACK AT COMMERCIAL ALERTING DISPLAYS.
2. PENDANT-MOUNT CAD TV DISPLAYS FROM CEILING ABOVE HOSE REEL. LOCATE SUFFICIENTLY CLEAR OF WALL TO AVOID INTERFERENCE WITH DOORS IN THE FULLY OPEN POSITION. COORDINATE LOCATION AND MOUNTING WITH ARCHITECTURAL DRAWINGS AND OWNER PRIOR TO INSTALLATION.

GENERAL ALERTING NOTES

A. E.C. SHALL COORDINATE ALL DEVICE LOCATIONS IN FIELD WITH ALERTING SYSTEM DRAWING AND OTHER TRADES BEFORE WORK COMMENCES.

B. E.C. SHALL REFER TO DRAWING E-001 FOR LEGEND INFORMATION.

C. PROVIDE CUTTING, PATCHING, AND RESTORATION OF FINISHES NECESSARY FOR WORK SURFACES DAMAGED BY THIS WORK. SPACES AROUND CONDUITS PASSING THROUGH FLOORS AND WALLS SHALL BE NEATLY PATCHED AND FINISHED TO MATCH NEW/EXISTING. STRUCTURAL MEMBERS SHALL NOT BE CUT OR PENETRATED IN ANY MANNER. THE SPACES AROUND THE CONDUITS SHALL BE SEALED TO PREVENT ENTRANCE OF MOISTURE. PROVIDE FIRE STOPPING PER UL APPROVED METHODS.

D. ALL WIRING DEVICES SHOWN ON BLOCK WALLS SHALL BE FURNISHED AND INSTALLED RECESSED FLUSH WITH BLOCK WALL. ALL CONDUITS AND WIRING FEEDING DEVICES SHALL BE INSTALLED IN HOLLOW OF BLOCK WALL. E.C. SHALL COORDINATE ALL WORK WITH MASONS BEFORE CONSTRUCTION COMMENCES.

E. E.C. SHALL ENSURE ALL LOW-VOLTAGE CABLE THAT CROSSES ANY EXPOSED CEILING SHALL BE INSTALLED IN EMT.

F. REFER TO ALERTING SYSTEMS DRAWINGS FOR ALL ALERTING SYSTEM BOX SIZES, CONDUIT SIZES, EQUIPMENT DIMENSIONS, AND SUPPLEMENTAL INFORMATION TO MAKE ALL PATHWAYS READY FOR ALERTING SYSTEM VENDOR INSTALLATION.

G. E.C. SHALL COORDINATE ALL INSTALLATION LOCATIONS AND QUANTITIES WITH OWNER'S ALERTING SYSTEM VENDOR PRIOR TO COMMENCEMENT OF WORK.

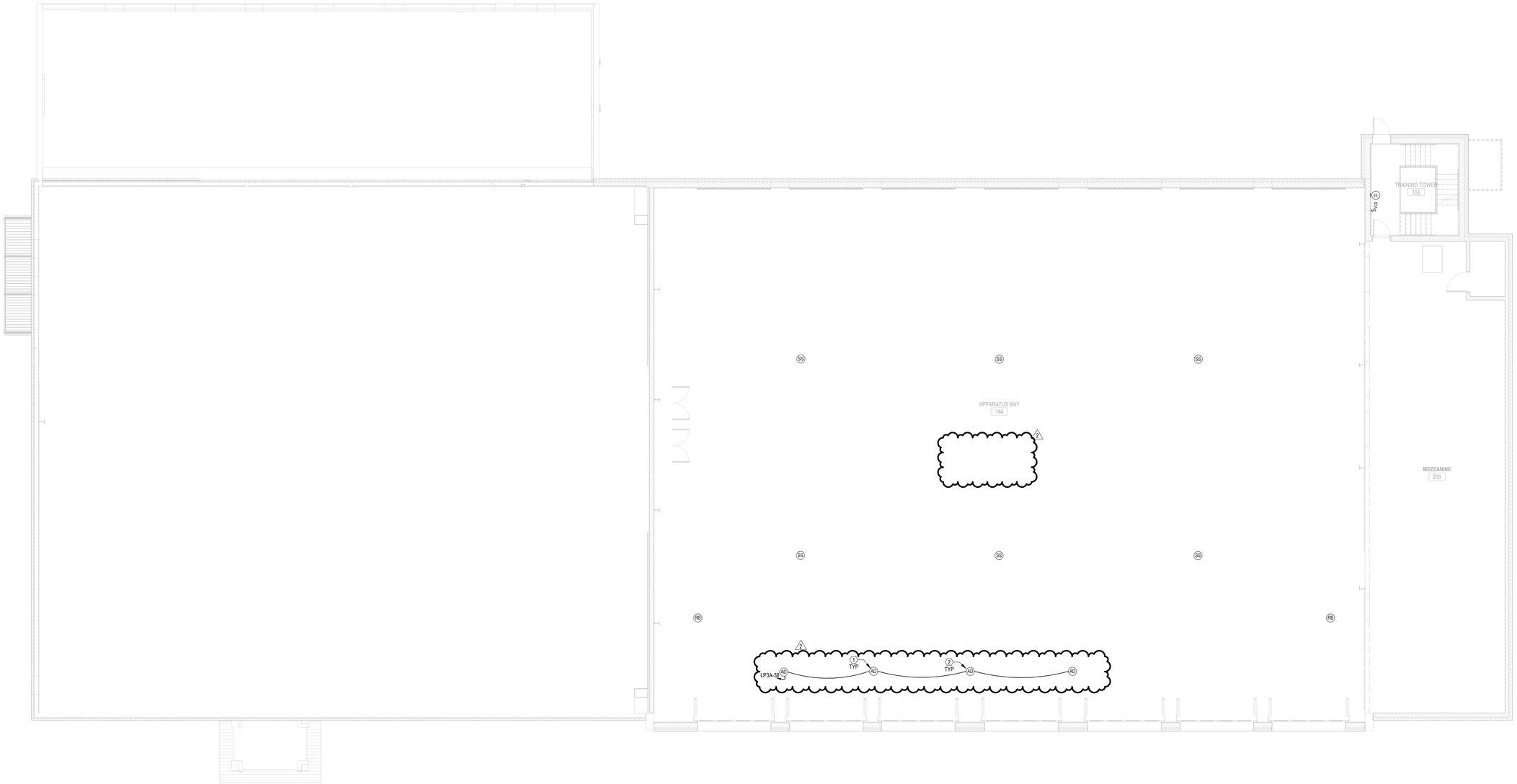

1 **MEZZANINE ALERTING PLAN**
1/8" = 1'-0"

MW STUDIOS
ARCHITECTURE + MASTER PLANNING
8098 SANDPIPER CIR, SUITE H
NOTTINGHAM, MD 21236
410-344-1460
INFO@MWSARCH.COM
WWW.MWSARCH.COM

CONSULTANT:

DEDC
ENGINEERING | DESIGN | CONSULTING
Delaware
315 S. Chapel Street
Newark, DE 19711
Phone
302.738.7172
Fax
302.738.7175
www.dedc-eng.com
Pennsylvania
Dome Morris Plaza
30 S. 17th Street
Suite 830
Philadelphia, PA 19103
Phone
267.804.7286

SEAL:

COMMONWEALTH OF PENNSYLVANIA
REGISTERED PROFESSIONAL
SCOTTIN FRENCK
ENGINEER
PE084123

EXETER TOWNSHIP
EMERGENCY SERVICES FACILITY
70 GIBRALTAR ROAD
READING PA 19606

PROJECT NUMBER: 25-049

SUBMISSION:
BID SET

ORIGINAL ISSUE DATE:
10/01/2026

SHEET REVISION SCHEDULE:

No.	DATE
2	10/22/26

LAST PROJECT REVISION: No 2 | 10/22/26

MEZZANINE ALERTING PLAN

SHEET NUMBER:

E402

10/23/2026 11:16:17 AM

ALL DRAWINGS ARE PROTECTED BY FEDERAL COPYRIGHT BY MANNS WOODWARD STUDIOS, INC. AND CAN NOT BE REPRODUCED OR MODIFIED IN ANY MANNER WITHOUT WRITTEN PERMISSION. DOCUMENTS MAY NOT BE USED IN PART OR WHOLE TO DEVELOP THE DESIGN OF ANOTHER BUILDING WITHOUT EXPRESS WRITTEN PERMISSION BY MANNS WOODWARD STUDIOS.

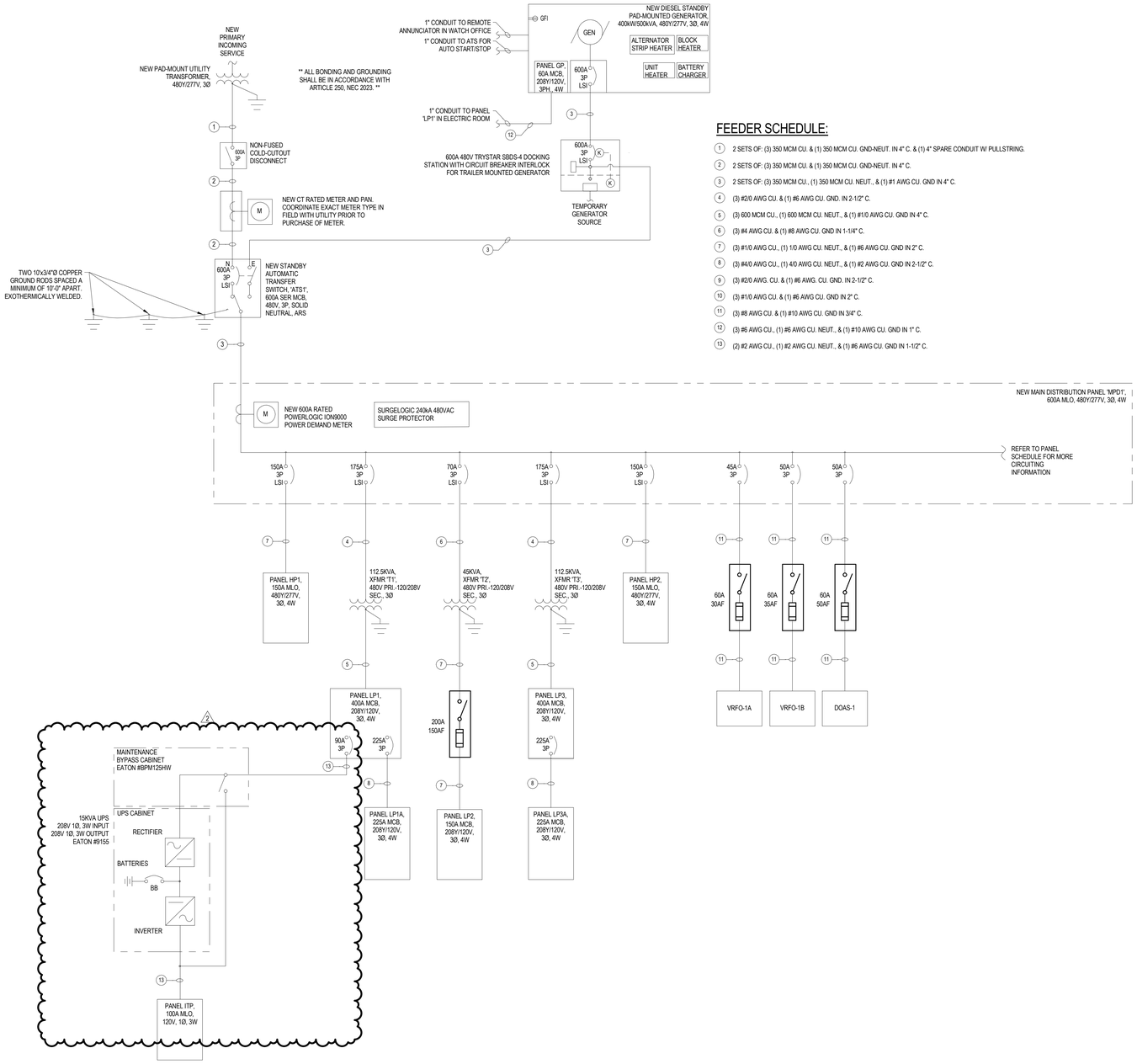

FEEDER SCHEDULE:

1. 2 SETS OF: (3) 350 MCM CU. & (1) 350 MCM CU. GND-NEUT. IN 4" C. & (1) 4" SPARE CONDUIT W/ PULLSTRING.
2. 2 SETS OF: (3) 350 MCM CU. & (1) 350 MCM CU. GND-NEUT. IN 4" C.
3. 2 SETS OF: (3) 350 MCM CU., (1) 350 MCM CU. NEUT., & (1) #1 AWG CU. GND IN 4" C.
4. (3) #2/0 AWG CU. & (1) #6 AWG CU. GND. IN 2-1/2" C.
5. (3) 600 MCM CU., (1) 600 MCM CU. NEUT., & (1) #1/0 AWG CU. GND IN 4" C.
6. (3) #4 AWG CU. & (1) #8 AWG CU. GND IN 1-1/4" C.
7. (3) #1/0 AWG CU., (1) 1/0 AWG CU. NEUT., & (1) #6 AWG CU. GND IN 2" C.
8. (3) #4/0 AWG CU., (1) 4/0 AWG CU. NEUT., & (1) #2 AWG CU. GND IN 2-1/2" C.
9. (3) #2/0 AWG. CU. & (1) #6 AWG. CU. GND. IN 2-1/2" C.
10. (3) #1/0 AWG CU. & (1) #6 AWG CU. GND IN 2" C.
11. (3) #8 AWG CU. & (1) #10 AWG CU. GND IN 3/4" C.
12. (3) #6 AWG CU., (1) #6 AWG CU. NEUT., & (1) #10 AWG CU. GND IN 1" C.
13. (2) #2 AWG CU., (1) #2 AWG CU. NEUT., & (1) #6 AWG CU. GND IN 1-1/2" C.

1 ELECTRICAL SINGLE LINE DIAGRAM
NOT TO SCALE

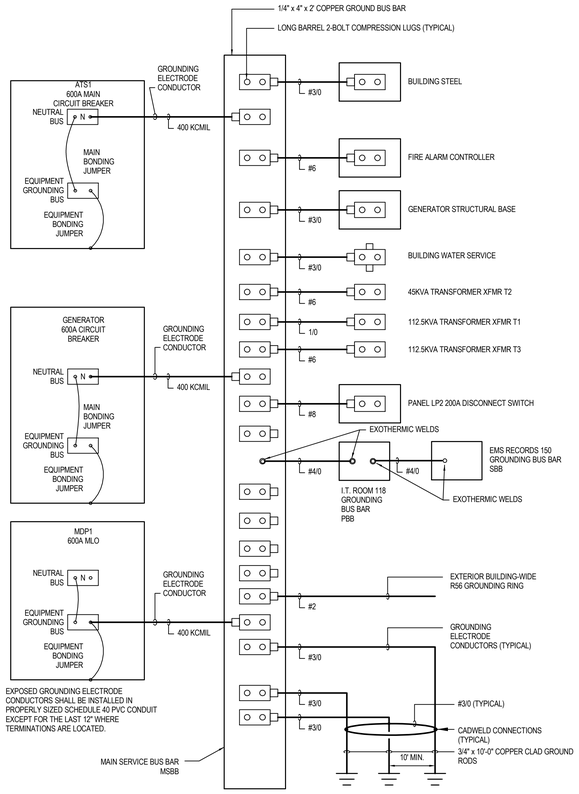

2 MAIN ELECTRICAL SERVICE GROUND BUSBAR DETAIL (MSBB)
NOT TO SCALE

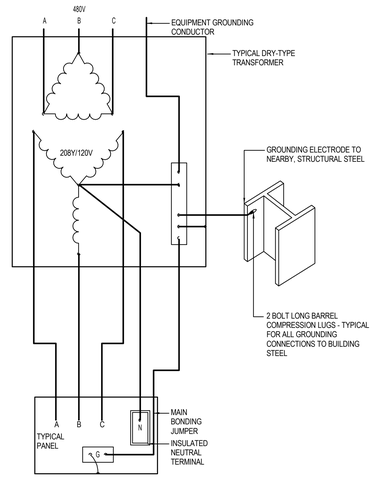

TYPICAL TRANSFORMER AND PANEL GROUNDING DETAIL
SCALE: N.T.S.

NOTE: PROVIDE DEDICATED GROUNDING TO ALL EQUIPMENT (MEDICAL, MECHANICAL, ETC) AND SYSTEMS AS REQUIRED BY NEC AND EQUIPMENT MANUFACTURER.

3 TYPICAL TRANSFORMER AND PANEL GROUNDING DETAIL
NOT TO SCALE

ALL DRAWINGS ARE PROTECTED BY FEDERAL COPYRIGHT BY MANNS WOODWARD STUDIOS, INC. AND CAN NOT BE REPRODUCED OR MODIFIED IN ANY MANNER WITHOUT WRITTEN PERMISSION. DOCUMENTS MAY NOT BE USED IN PART OR WHOLE TO DEVELOP THE DESIGN OF ANOTHER BUILDING WITHOUT EXPRESS WRITTEN PERMISSION BY MANNS WOODWARD STUDIOS.

MW STUDIOS
ARCHITECTURE + MASTER PLANNING
8098 SANDPIPER CIR, SUITE H
NOTTINGHAM, MD 21236
410-344-1460
INFO@MWSARCH.COM
WWW.MWSARCH.COM

CONSULTANT:

DEDC
ENGINEERING | DESIGN | CONSULTING
Delaware
312 S. Chapel Street
Newark, DE 19711
Phone
302.738.7172
Fax
302.738.7175
www.dedc-eng.com
Pennsylvania
Donna Morris Plaza
30 S. 17th Street
Suite 820
Philadelphia, PA 19103
Phone
267.804.7286

SEAL:

COMMONWEALTH OF PENNSYLVANIA
REGISTERED PROFESSIONAL
SCOTT W. FRENCK
ENGINEER
PE084133

EXETER TOWNSHIP
EMERGENCY SERVICES FACILITY
70 GIBRALTAR ROAD
READING PA 19606

PROJECT NUMBER: 25-049

SUBMISSION:
BID SET

ORIGINAL ISSUE DATE:
10/01/2026

SHEET REVISION SCHEDULE:

No.	DATE
2	10/22/26

LAST PROJECT REVISION: No 2 | 10/22/26

ELECTRICAL SINGLE LINE DIAGRAM & DETAILS

SHEET NUMBER:

E601

10/23/2025 11:16:17 AM

LIGHTING FIXTURE SCHEDULE (PROJECT)

TYPE	WATTS	VOLTS	LAMP TYPE	KELVIN TEMP	MANUFACTURER/MODEL (OR APPROVED EQUAL)	DESCRIPTION	REMARKS
A1	35W	277V	LED	3500 K	ELITE / 22-OAT1-LED-2000L/3000L/4000L-DIM10-120-MVOLT-30K/35K/40K-85	2'x2' ARCHITECTURAL ARCHITECTURAL VOLUMETRIC SHALLOW RECESSED LED TROFFER FIXTURE, ROLLED STEEL BODY, WHITE FINISH, 0-10V ELECTRONIC DIMMING DRIVER	
A1 EM	35W	277V	LED	3500 K	ELITE / 22-OAT1-LED-2000L/3000L/4000L-DIM10-120-MVOLT-30K/35K/40K-85-0-EMG-LED-10W	2'x2' ARCHITECTURAL ARCHITECTURAL VOLUMETRIC SHALLOW RECESSED LED TROFFER FIXTURE, ROLLED STEEL BODY, WHITE FINISH, 0-10V ELECTRONIC DIMMING DRIVER	ALL FIXTURES MARKED 'EM' SHALL BE PROVIDED WITH 90 MINUTE MINIMUM INTEGRATED EMERGENCY BATTERY BACKUP.
B1	40W	277V	LED	3500 K	ELITE / OLS-DI-LED-2-S-4'-D750L-US00L-BW-1C-DIM10-MVOLT-35K-90-WH	4' ARCHITECTURAL SUSPENDED LINEAR FIXTURE, ALUMINUM HOUSING, ACRYLIC LENS, 0-10V ELECTRONIC DIMMING DRIVER	
B2	26W	277V	LED	3500 K	ELITE / OLS-R-LED-4-TB-3G-S-4'-750L-DIM10-MVOLT-3500K-90-WH	4' LINEAR LAY-IN LUMINAIRE, WHITE FINISH, 0-10V ELECTRONIC DIMMING DRIVER, 4" FLUSH LENS	
C1	18W	277V	LED	3500 K	ELITE / HH4-1500L-DIM10-MVOLT-MWD-35K-90-HH4-4501-XX-XX-XX	4' ROUND DOWNLIGHT, ALUMINUM DIE-CAST BODY AND TRIM, 0-10V ELECTRONIC DIMMING DRIVER	
C1 EM	18W	277V	LED	3500 K	ELITE / HH4-1500L-DIM10-MVOLT-MWD-35K-90-EMG-LED-10W-HH4-4501-XX-XX-XX	4" ROUND DOWNLIGHT, ALUMINUM DIE-CAST BODY AND TRIM, 0-10V ELECTRONIC DIMMING DRIVER	ALL FIXTURES MARKED 'EM' SHALL BE PROVIDED WITH 90 MINUTE MINIMUM INTEGRATED EMERGENCY BATTERY BACKUP.
D1	15W	277V	LED	3500 K	ELITE / SCH6-LED-PM-1500L-DIM10-MVOLT-MD-35K-90+-BK--HH6-6501	6' ROUND CYLINDER PENDANT, SUSPENDED MOUNT, MEDIUM DISTRIBUTION, ALUMINUM HOUSING, SOFT FOCUS CANOPY	
EX1	3W	277V	LED		EVENLITE / SOVII-EM-G-1M-BA-SU-XX-IR	SINGLE FACE UNIVERSAL MOUNT EXIT SIGN, ALUMINUM HOUSING,BRUSHED ALUMINUM FINISH, ACRYLIC BODY WITH MIRROR FINISH, GREEN LETTERS, CHEVERONS AS NECESSARY, 90 MINUTE MINIMUM EMERGENCY BACKUP BATTERY	EXIT SIGNS SHALL BE MOUNTED CENTERED OVER EGRESS DOORS.
EX2	3W	277V	LED		EVENLITE / TWL-EM-G-1U-W-SD-TP	SINGLE FACE WET LOCATION EXIT SIGN, THERMOPLASTIC HOUSING, GREEN LETTERS, CHEVERONS AS NECESSARY, 90 MINUTE MINIMUM EMERGENCY BACKUP BATTERY	EXIT SIGNS SHALL BE MOUNTED CENTERED OVER EGRESS DOORS.
F1	4.4W/FT	24VDC	LED	2700 K	TARGETTI / DL-ED-44-I-27-HC024-A-DL-ALUM-U-8-DELI901241CPWM	36 LED/FT TAPELIGHT, FACTORY PREPPED ENDS, REMOTE POWER SUPPLY, ALUMINUM MOUNTING CHANNEL, FIELD CUTTABLE	E.C. SHALL TAKE-OFF ALL LENGTHS OF TAPELIGHT FROM DRAWINGS AND SHALL CONFIRM LENGTHS IN FIELD WITH ACTUAL LIGHT FIXTURE LOCATION DIMENSIONS. E.C. TO PROVIDE ADEQUATE NUMBER OF DRIVERS FOR TAPELIGHT OPERATION. E.C. SHALL MOUNT TAPELIGHT ON TOE KICK OF LOCKERS. E.C. SHALL COORDINATE INTERCONNECTION OF WIRING WITH FIRE ALARM ALERTING SYSTEM.
F2	4.4W/FT	24VDC	LED	3500 K	TARGETTI / DL-ED-44-I-27-HC024-A-DL-ALUM-U-8-DELI901241CPWM	36 LED/FT TAPELIGHT, FACTORY PREPPED ENDS, REMOTE POWER SUPPLY, ALUMINUM MOUNTING CHANNEL, FIELD CUTTABLE	E.C. SHALL TAKE-OFF ALL LENGTHS OF TAPELIGHT FROM DRAWINGS AND SHALL CONFIRM LENGTHS IN FIELD WITH ACTUAL LIGHT FIXTURE LOCATION DIMENSIONS. E.C. TO PROVIDE ADEQUATE NUMBER OF DRIVERS FOR TAPELIGHT OPERATION. E.C. SHALL MOUNT TAPELIGHT BELOW CABINETS AS REQUIRED. E.C. SHALL COORDINATE EXACT MOUNTING LOCATION WITH MILLWORK AND ARCHITECTURAL DRAWINGS.
G1	176W	277V	LED	3500 K	ILP / EDV4-24L-U-35-FRL-UP/2L-AC10Y	1.5'x4' HIGHBAY LED FIXTURE, CAST ALUMINUM HOUSING, IMPACT RESISTANT FROSTED ACRYLIC LENS, WHITE FINISH, SUSPENDED CABLE MOUNT, 0-10V ELECTRONIC DIMMING DRIVER	FIXTURE SHALL BE MOUNTED AT 19'-0" A.F.F. AS MEASURED TO BOTTOM OF FIXTURE. E.C. SHALL COORDINATE ALL HEIGHTS IN FIELD WITH OWNER/OWNER'S ONSITE REPRESENTATIVE.
G1 EM	82W	277V	LED	3500 K	ILP / EDV4-24L-U-35-FRL-UP/2L-AC10YL-EM20	1.5'x4' HIGHBAY LED FIXTURE, CAST ALUMINUM HOUSING, IMPACT RESISTANT FROSTED ACRYLIC LENS, WHITE FINISH, SUSPENDED CABLE MOUNT, 0-10V ELECTRONIC DIMMING DRIVER	FIXTURE SHALL BE MOUNTED AT 19'-0" A.F.F. AS MEASURED TO BOTTOM OF FIXTURE. E.C. SHALL COORDINATE ALL HEIGHTS IN FIELD WITH OWNER/OWNER'S ONSITE REPRESENTATIVE.
H1	38W	277V	LED	3500 K	ILP / WTZ4-SL-U-40-RAFL-SS-ACxL/SS	4' LINEAR FULLY ENCLOSED AND GASKETED FIXTURE, FIBERGLASS HOUSING, ELECTRONIC DRIVER, SHALLOW POLYCARBONATE CLEAR LENS, WET LOCATION LISTED, -40°F COLD START DRIVER, STAINLESS STEEL LATCHE	
H1 EM	38W	277V	LED	4000 K	ILP / WTZ4-SL-U-40-RAFL-SS-ACxL/SS-EM12	4' LINEAR FULLY ENCLOSED AND GASKETED FIXTURE, WHITE FINISH, ELECTRONIC DRIVER, RIBBED FROSTED ACRYLIC LENS, WET LOCATION LISTED, EMERGENCY BATTERY BACKUP	ALL FIXTURES MARKED 'EM' SHALL BE PROVIDED WITH 90 MINUTE MINIMUM INTEGRATED EMERGENCY BATTERY BACKUP.
J1	54W	277V	LED	3500 K	HIGHSLED / HLLX-4-V-T-8-W-T-7-CB-AE	4' LINEAR WALL MOUNTED FIXTURE, WHITE FINISH, OPAL LENS, 0-10V ELECTRONIC DIMMING DRIVER, IP67 RATED	
K1	40W	277V	LED	3500 K	FIXTURE TO BE SELECTED BY ARCHITECT	LINEAR PENDANT MOUNTED FIXTURE	
L1	12W	277V	LED	3000 K	ABOVE ALL LIGHTING / SWML-12-SW-1-RM-BZ-M-D	EXTERIOR SLIM RECESSED STEP AND WALL LIGHT, ALUMINUM HOUSING, TEMPERED GLASS LENS, 0-10V ELECTRONIC DIMMING DRIVER	
L2	4W	277V	LED	3000 K	WAC / WL-LED200F-30-65-BK	SLIM RECESSED STEP AND WALL LIGHT, ALUMINUM HOUSING, LOW PROFILE, IP67 RATED, 0-10V ELECTRONIC DIMMING DRIVER	
M1	27W	277V	LED	3000 K	LIGMAN / ULH-10665-27W-W30-01-120/277V-GFCI-DIM	42" TALL ROUND BOLLARD LIGHT, BLACK FINISH, MARINE GRADE ALUMINUM HOUSING, POWDER COAT PAINT FINISH, IP66 RATED, WET LOCATION LISTED ELECTRONIC DRIVER	
N1	10W	277V	LED	3000 K	VISTA PRO / 1182-SS-SS-NS-30-C-DV-CX-ND-834-T010	IN GROUND LED SPOT LIGHT, STAINLESS STEEL HOUSING, DRIVE OVER GRADE, NARROW SPOT, CLEAR POLYMER LENS, IP68 RATED, 10 DEGREE TILT OPTIC,	E.C. SHALL PROVIDE (3) AIMINGS PER FIXTURE.
P1	171W	277V	LED	3000 K	NLS LIGHTING / NV-2-13-80L-7-30K8-UNV-ASA-BRZ-BS-MGF-HSS-GL	SINGLE LUMINARE ROADWAY POLE LIGHT FIXTURE, DIE CAST ALUMINUM, MARINE GRADE BRONZE FINISH, TEMPERED GLASS LENS, HOUSE SIDE SHIELD, 0-10V ELECTRONIC DIMMING DRIVER	FIXTURE SHALL BE MOUNTED ONTO 4" ROUND STEEL POLE MODEL #SSSP-22-4R-7G-12BC-SGL-BRZ-136-MGF-UL-PROV AS MANUFACTURED BY NLS LIGHTING WITH A MOUNTING CONFIGURATION OF 'SGL'.
P2	171W	277V	LED	3000 K	NLS LIGHTING / NV-2-T4FTW-80L-7-30K8-UNV-ASA-BRZ-BS-MGF-HSS-GL	SINGLE LUMINARE ROADWAY POLE LIGHT FIXTURE, DIE CAST ALUMINUM, MARINE GRADE BRONZE FINISH, TEMPERED GLASS LENS, HOUSE SIDE SHIELD, 0-10V ELECTRONIC DIMMING DRIVER	FIXTURE SHALL BE MOUNTED ONTO 4" ROUND STEEL POLE MODEL #SSSP-22-4R-7G-12BC-SGL-BRZ-136-MGF-UL-PROV AS MANUFACTURED BY NLS LIGHTING WITH A MOUNTING CONFIGURATION OF 'SGL'.
Q1 EM	21W	277V	LED	3000 K	NLS LIGHTING / VSR-S-T2-16L-40-30K8-UNV-CM-BRZ-MGF	CEILING MOUNTED CANOPY LIGHT FIXTURE, LOW PROFILE. SPUN ALUMINUM, MARINE GRADE BRONZE FINISH	ALL FIXTURES MARKED 'EM' SHALL BE PROVIDED WITH 90 MINUTE MINIMUM INTEGRATED EMERGENCY BATTERY BACKUP.
R1	5W	277V	LED	3500 K	ELITE / FG-L2A-3-35-90 ELITE / FG-RTL2-4 48V GROOVE TRACK	ELITE 48V GROOVE TRACK SYSTEM WITH DIFFUSED 3" ADJUSTABLE TRACK LIGHT	TRACK LIGHTS SHALL BE SPACED 12" ON CENTER FROM EACH OTHER ON GROOVE TRACK. E.C. SHALL COORDINATE EXACT LOCATIONS AND AIMINGS WITH OWNER'S REPRESENTATIVE AND ARCHITECTURAL DRAWINGS PRIOR TO COMMENCEMENT OF NEW WORK.
S1	60W	277V	LED	3000 K	METEOR / LA6-60-309-RGB-UNV-DMX-40-40-BLK-OUT-WW	RGB IP65 RATED WALL CYLINDER DIRECT/INDIRECT LIGHT FIXTURE	
T1	6W/FT	24VDC	LED	3000 K	TARGETTI / DL-PX-60-O-RGBW-24-A-DL-ALUM-U-8-DELI901241CPWM	RGBW EXTERIOR 18 LED/FT TAPELIGHT, FACTORY PREPPED ENDS, REMOTE POWER SUPPLY, ALUMINUM MOUNTING CHANNEL, FIELD CUTTABLE, IP65 WEATHERPROOF	E.C. SHALL TAKE-OFF ALL LENGTHS OF TAPELIGHT FROM DRAWINGS AND SHALL CONFIRM LENGTHS IN FIELD WITH ACTUAL LIGHT FIXTURE LOCATION DIMENSIONS. E.C. TO PROVIDE ADEQUATE NUMBER OF DRIVERS FOR TAPELIGHT OPERATION. E.C. SHALL MOUNT TAPELIGHT BELOW SOFFIT. E.C. SHALL COORDINATE EXACT MOUNTING TYPE AND LOCATION WITH OWNER'S REPRESENTATIVE PRIOR TO PROVIDING SHOP DRAWINGS.
T2	4.4W/FT	24VDC	LED	2700 K	TARGETTI / DL-ED-44-I-27-HC024-A-DL-ALUM-U-8-DELI901241CPWM	36 LED/FT TAPELIGHT, FACTORY PREPPED ENDS, REMOTE POWER SUPPLY, ALUMINUM MOUNTING CHANNEL, FIELD CUTTABLE	E.C. SHALL TAKE-OFF ALL LENGTHS OF TAPELIGHT FROM DRAWINGS AND SHALL CONFIRM LENGTHS IN FIELD WITH ACTUAL LIGHT FIXTURE LOCATION DIMENSIONS. E.C. TO PROVIDE ADEQUATE NUMBER OF DRIVERS FOR TAPELIGHT OPERATION. E.C. SHALL MOUNT TAPELIGHT ON TOE KICK OF LOCKERS.
V1	26W	277V	LED	3000 K	TARGETTI / SOL-CC-FE-L2-ZM-30	ADJUSTABLE FLOODLIGHT PROJECTOR. ANODIZED DIE-CAST ALUMINUM, IP68	E.C. SHALL PROVIDE (3) AIMINGS PER FIXTURE.
W1 EM	37W	277V	LED	3000 K	NLS LIGHTING / NV-2-T2-16L-7-30K8-UNV-WM-BRZ-MGF-GL-EM8	SINGLE LUMINARE FULL CUTOFF WALL PACK, DIE-CAST ALUMINUM HOUSING, BRONZE FINISH, OUTDOOR RATED, ONE-PIECE GASKET, IMPACT RESISTANT GLASS LENS, 90 MINUTE MINIMUM EMERGENCY BACKUP BATTERY.	ALL FIXTURES MARKED 'EM' SHALL BE PROVIDED WITH 90 MINUTE MINIMUM INTEGRATED EMERGENCY BATTERY BACKUP.
W2	136	277V	LED	3000 K	NLS LIGHTING / NV-2-T4FTW-64L-7-30K8-UNV-WM-BRZ-MGF-GL	SINGLE LUMINARE FULL CUTOFF WALL PACK, DIE-CAST ALUMINUM HOUSING, BRONZE FINISH, OUTDOOR RATED, ONE-PIECE GASKET, IMPACT RESISTANT GLASS LENS, 90 MINUTE MINIMUM EMERGENCY BACKUP BATTERY.	ALL FIXTURES MARKED 'EM' SHALL BE PROVIDED WITH 90 MINUTE MINIMUM INTEGRATED EMERGENCY BATTERY BACKUP.
X1	33.6W	277V	LED	3500 K	COLOR KINETICS / 423-000035-30	EXTERIOR RATED COMPACT RGBW 4' LINEAR LUMINAIRE, ANODIZED ALUMINUM	
Y1	116W	277V	LED	3500 K	FLUXWERX / VU1-R-A-C-35-S-XX-S-E1-M-03	12'-0" DECORATIVE LINEAR LED PENDANT FIXTURE, BLACK FINISH, CLEAR ACRYLIC LENS, I-BEAM DESIGN, REMOTE 0-10V ELECTRONIC DIMMING DRIVER, AIRCRAFT CABLE HUNG	E.C. SHALL MOUNT FIXTURE AT 6'-0" A.F.F. AS MEASURED TO BOTTOM OF FIXTURE. E.C. SHALL COORDINATE EXACT MOUNTING HEIGHT IN FIELD WITH CONFERENCE ROOM TABLE AND ARCHITECTURAL DRAWINGS PRIOR TO INSTALLATION OF FIXTURE.

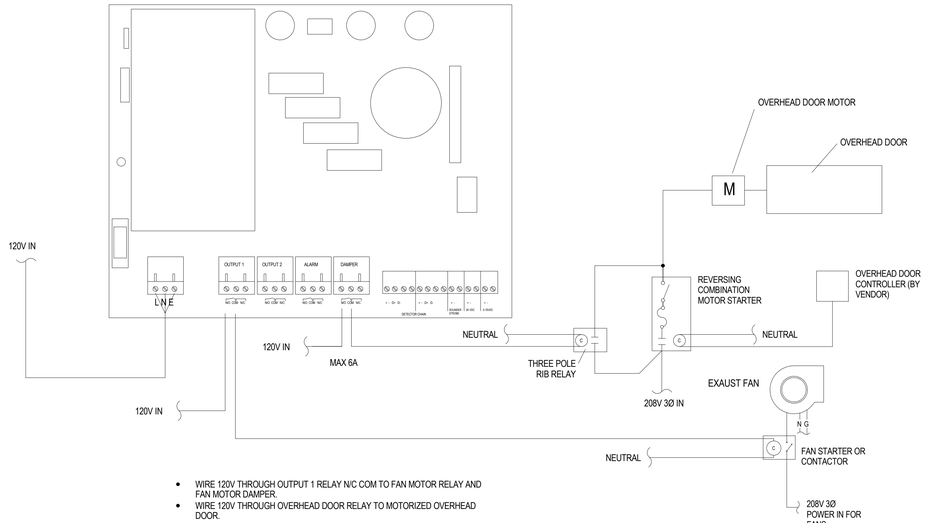

- WIRE 120V THROUGH OUTPUT 1 RELAY N/C COM TO FAN MOTOR RELAY AND FAN MOTOR DAMPER.
- WIRE 120V THROUGH OVERHEAD DOOR RELAY TO MOTORIZED OVERHEAD DOOR.
- RELAYS MAX 6A
- SET "DAMPER" OUTPUT TO CHANGE STATE AT SAME TIME AS OUTPUT 1
- COORDINATE ALL CONNECTIONS AND EQUIPMENT REQUIREMENTS WITH OVERHEAD DOOR VENDOR PRIOR TO INSTALLATION.

4 PARKSAFE SYSTEM WIRING DIAGRAM
NOT TO SCALE

NOTE:

1. ACCESS CONTROL WIRING TO BE GRAY IN COLOR.
2. ALL DEVICES/EQUIPMENT TO MATCH NCC STANDARD.
3. PROVIDE FREE EGRESS ON DOORS TO RECEIVE NEW ACCESS CONTROL.

5 DOOR ACCESS CONTROL DIAGRAM
NOT TO SCALE

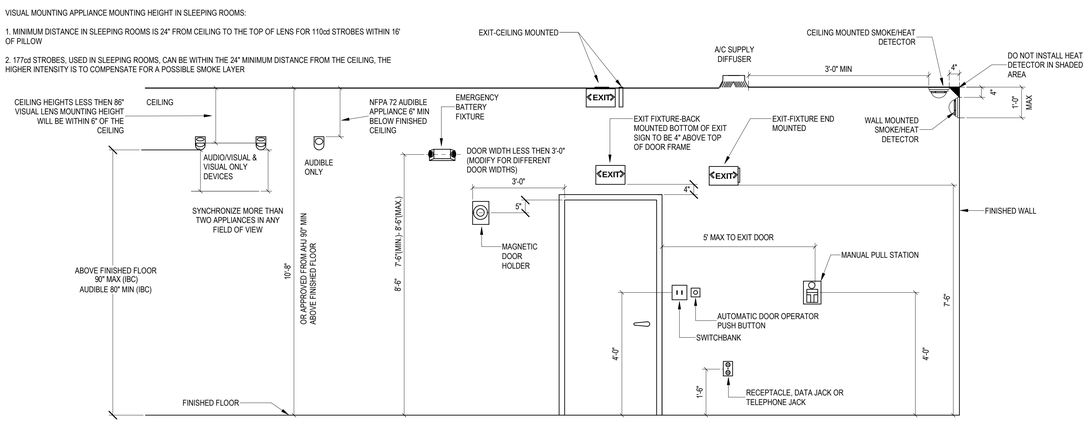

1 TYPICAL MOUNTING HEIGHTS
NOT TO SCALE

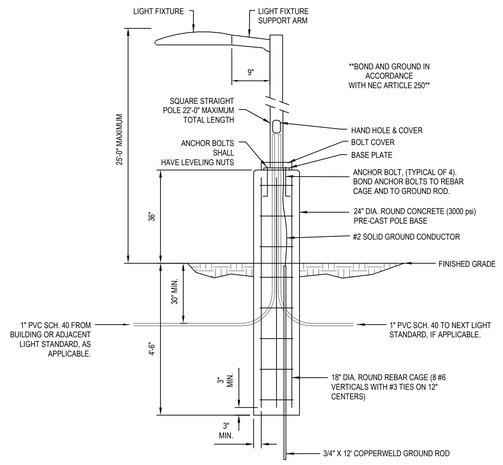

2 POLE LIGHT DETAIL (TYP)
NOT TO SCALE

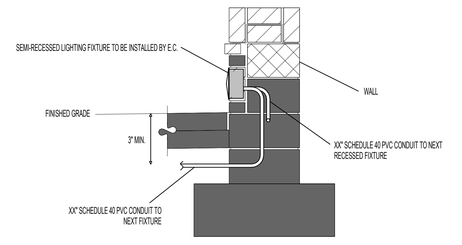

3 STEP/WALL LIGHT MOUNTING DETAIL (TYPICAL)
NOT TO SCALE

ALL DRAWINGS ARE PROTECTED BY FEDERAL COPYRIGHT BY MANNS WOODWARD STUDIOS, INC. AND CAN NOT BE REPRODUCED OR MODIFIED IN ANY MANNER WITHOUT WRITTEN PERMISSION. DOCUMENTS MAY NOT BE USED IN PART OR WHOLE TO DEVELOP THE DESIGN OF ANOTHER BUILDING WITHOUT EXPRESS WRITTEN PERMISSION BY MANNS WOODWARD STUDIOS.

MW STUDIOS
ARCHITECTURE + MASTER PLANNING
8098 SANDPIPER CIR, SUITE H
NOTTINGHAM, MD 21236
410-344-1460
INFO@MWSARCH.COM
WWW.MWSARCH.COM

CONSULTANT:

DEDC
ENGINEERING | DESIGN | CONSULTING
Delaware
212 S. Chapel Street
Newark, DE 19711
Phone
302.738.7172
Fax
302.738.7173
www.dedc-eng.com
Pennsylvania
Drama Means Please
30 S. 17th Street
Suite 820
Philadelphia, PA 19103
Phone
267.804.7286

SEAL:

COMMONWEALTH OF PENNSYLVANIA
REGISTERED PROFESSIONAL
SCOTTIN TRENCK
ENGINEER
PE084137

EXETER TOWNSHIP
EMERGENCY SERVICES FACILITY
70 GIBRALTAR ROAD
READING PA 19606

PROJECT NUMBER: 25-049

SUBMISSION:
BID SET

ORIGINAL ISSUE DATE:
10/01/2026

SHEET REVISION SCHEDULE:

No.	DATE
1	10/15/26
2	10/22/26

LAST PROJECT REVISION: No 2 | 10/22/26

LIGHTING FIXTURE SCHEDULE AND DETAILS

SHEET NUMBER:

E602

10/23/2026 11:16:17 AM

LIGHTING CONTROL NOTES:

1. DIGITAL TIME CLOCK SHALL BE TORK #DGLC200A-NC WITH PHOTOCELL #EPC-A INCLUDED.
2. PROVIDE NEMA 1 ENCLOSURE. E.C. SHALL FURNISH AND INSTALL PHOTOCELL DEVICE WITH DIGITAL TIMECLOCK ON NORTHEAST CORNER OF BUILDING'S ROOF. E.C. SHALL INSTALL PHOTOCELL SO OPERATION IS NOT INHIBITED DUE TO ADJACENT LIGHTING SOURCES IN THE AREA.
3. INSTALL SYSTEM PER MANUFACTURER'S WRITTEN INSTRUCTIONS.
4. LIGHTING CONTACTOR #1 SHALL BE 8903-LG04-V02 AND LIGHTING CONTACTOR #2 SHALL BE 8903-LG04-V02 AS MANUFACTURED BY SQUARE-D OR APPROVED EQUAL
5. ALL EXTERIOR LIGHTING FIXTURES SHALL BE INSTALLED ON A LIGHTING CIRCUIT CONTROLLED BY DIGITAL TIMECLOCK WITH PHOTOCELL FOR AUTOMATIC DUSK TO DAWN OPERATION. LIGHTING CIRCUIT SHALL ALSO BE PROVIDED WITH CONTROLS TO DIM ALL FIXTURES TO 50% OPERATION FOR THE HOURS BETWEEN 10PM AND 7AM OR THE HOURS SPECIFIED AND APPROVED BY THE OWNER.

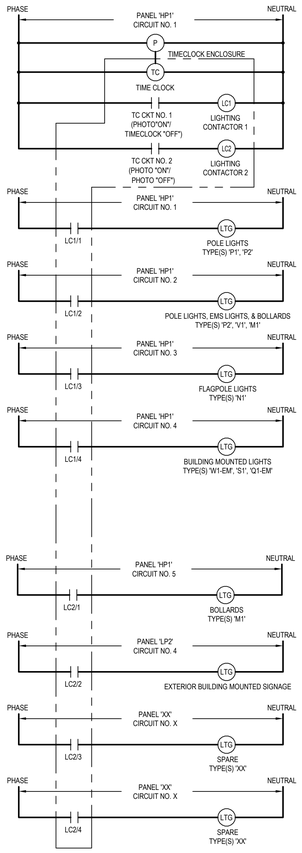

1 EXTERIOR LIGHTING CONTROL WIRING DIAGRAM
NOT TO SCALE

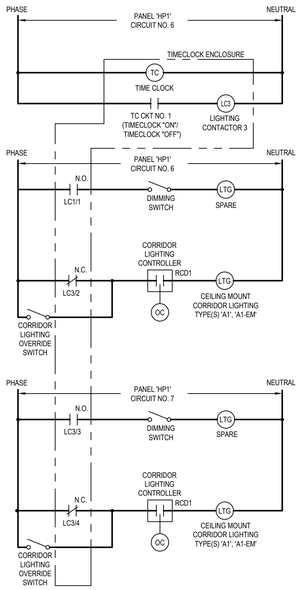

LIGHTING CONTROL NOTES:

1. DIGITAL TIME CLOCK SHALL BE TORK #7200Z PROVIDE NEMA 1 ENCLOSURE. SET TIME CLOCK TIME SETTINGS FOR TYPE 'A1', 'A1-EM' FIXTURE "LIGHTING ON OPERATING HOURS" TO BE ON FROM 7PM TO 7AM OR THE HOURS SPECIFIED AND APPROVED BY THE OWNER.
2. E.C. SHALL SET TIMECLOCK TO TURN LIGHTS ON AND OFF AS COORDINATED WITH OWNER.
3. INSTALL SYSTEM PER MANUFACTURER'S WRITTEN INSTRUCTIONS.
4. LIGHTING CONTACTOR SHALL BE 8903-LG04-V02 AS MANUFACTURED BY SQUARE-D OR APPROVED EQUAL. CONTACTOR SHALL HAVE N.O./N.C. FOR WIRING BELOW.
5. ALL LIGHTING OVERRIDE SWITCH LOCATIONS SHALL BE LOCATED IN CLOSET WITH CONTACTOR UNLESS OTHERWISE NOTED OR COORDINATED WITH OWNER'S REPRESENTATIVE PRIOR TO COMMENCEMENT OF NEW WORK.

2 INTERIOR BUNK CORRIDOR LOW-LEVEL LIGHTING CONTROL WIRING DIAGRAM
NOT TO SCALE

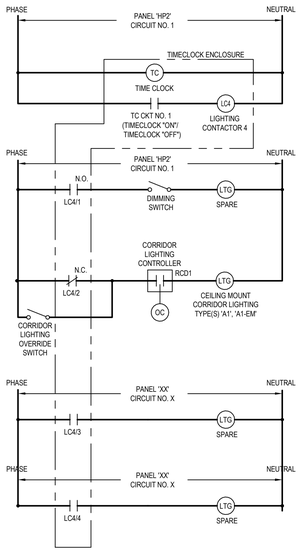

LIGHTING CONTROL NOTES:

1. DIGITAL TIME CLOCK SHALL BE TORK #7200Z PROVIDE NEMA 1 ENCLOSURE. SET TIME CLOCK TIME SETTINGS FOR TYPE 'A1', 'A1-EM' FIXTURE "LIGHTING ON OPERATING HOURS" TO BE ON FROM 7PM TO 7AM OR THE HOURS SPECIFIED AND APPROVED BY THE OWNER.
2. E.C. SHALL SET TIMECLOCK TO TURN LIGHTS ON AND OFF AS COORDINATED WITH OWNER.
3. INSTALL SYSTEM PER MANUFACTURER'S WRITTEN INSTRUCTIONS.
4. LIGHTING CONTACTOR SHALL BE 8903-LG04-V02 AS MANUFACTURED BY SQUARE-D OR APPROVED EQUAL. CONTACTOR SHALL HAVE N.O./N.C. FOR WIRING BELOW.
5. ALL LIGHTING OVERRIDE SWITCH LOCATIONS SHALL BE LOCATED IN CLOSET WITH CONTACTOR UNLESS OTHERWISE NOTED OR COORDINATED WITH OWNER'S REPRESENTATIVE PRIOR TO COMMENCEMENT OF NEW WORK.

3 INTERIOR EMS CORRIDOR LOW-LEVEL LIGHTING CONTROL WIRING DIAGRAM
NOT TO SCALE

RGB CONTROLLER CONNECTION DIAGRAM NOTES:

1. RGBW CONTROLLER SHALL BE WALL MOUNTED. THE CONTROLLER AND ETHERNET CONTROLLER PADS SHALL BE SUPPLIED WITH THE LIGHTING CONTROL SYSTEM. THE COMPUTER PROGRAM SHALL BE INSTALLED ON THE NETWORK AND FULLY CONTROLLED BY END USER.

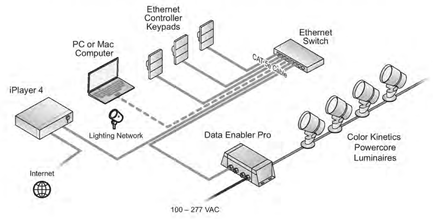

4 RGB CONTROLLER CONNECTION DIAGRAM
NOT TO SCALE

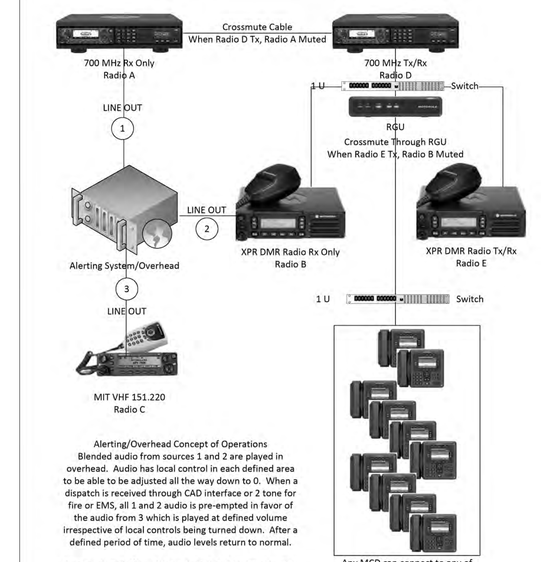

Alerting/Overhead Concept of Operations
Blended audio from sources 1 and 2 are played in overhead. Audio has local control in each defined area to be able to be adjusted all the way down to 0. When a dispatch is received through CAD interface or 2 tone for fire or EMS, all 1 and 2 audio is pre-empted in favor of the audio from 3 which is played at defined volume irrespective of local controls being turned down. After a defined period of time, audio levels return to normal.

Overhead audio from A is muted when D transmits. This is accomplished by consolette interconnection. Likewise overhead audio from B is muted when E transmits. This is accomplished through the RGU as these radios are dumb and have no crossmuting.

Version 2026-04-13

Any MCD can connect to any of Radios D or E
Units could connect to B but will not be programmed for this.
RGU interface of B to the RGU is just to accomplish crossmuting

5 FIRE RADIO BLOCK DIAGRAM
NOT TO SCALE

6 LIT BOLLARD BASE DETAIL (TYPICAL)
NOT TO SCALE

ALL DRAWINGS ARE PROTECTED BY FEDERAL COPYRIGHT BY MANNS WOODWARD STUDIOS, INC. AND CAN NOT BE REPRODUCED OR MODIFIED IN ANY MANNER WITHOUT WRITTEN PERMISSION. DOCUMENTS MAY NOT BE USED IN PART OR WHOLE TO DEVELOP THE DESIGN OF ANOTHER BUILDING WITHOUT EXPRESS WRITTEN PERMISSION BY MANNS WOODWARD STUDIOS.

MW STUDIOS
ARCHITECTURE + MASTER PLANNING
8098 SANDPIPER CIR, SUITE H
NOTTINGHAM, MD 21236
410-344-1460
INFO@MWSARCH.COM
WWW.MWSARCH.COM

CONSULTANT:

DEDC
ENGINEERED DESIGN CONSULTING
Delaware
312 S. Chapel Street
Newark, DE 19711
Phone
302.738.7172
Fax
302.738.7175
www.dedc-eng.com
Pennsylvania
Donna Morris Plaza
30 S. 17th Street
Suite 820
Philadelphia, PA 19103
Phone
267.804.7286

SEAL:

COMMONWEALTH OF PENNSYLVANIA
REGISTERED PROFESSIONAL
SCOTT W. FRENCH
ENGINEER
PE084137

EXETER TOWNSHIP
EMERGENCY SERVICES FACILITY
70 GIBRALTAR ROAD
READING PA 19606

PROJECT NUMBER: 25-049

SUBMISSION:
BID SET

ORIGINAL ISSUE DATE:
10/01/2026

SHEET REVISION SCHEDULE:

No.	DATE
1	10/15/26
2	10/22/26

LAST PROJECT REVISION: No 2 | 10/22/26

ELECTRICAL DETAILS

SHEET NUMBER:

E604

10/23/2026 11:16:18 AM

Panel: MDP1

Location: ELEC 119 | Volts: 480Y/277 | A.I.C. Rating: 65kA
Supply From: | Phases: 3 | Mains Type: MLO
Mounting: Surface | Wires: 4 | Mains Rating: 600.0 A
Enclosure: Indoor | MCB Rating: 600.0 A

Notes:

Circuit Description	Trip	Circuit Number	Number of Poles	Number of Poles	Circuit Number	Trip	Circuit Description	
PANEL LP1 VIA XFMR T1	175 A	1			2			
		3	3	3	4	50 A	VRFO-1B	
		5			6			
PANEL HP1	150 A	7			8			
		9	3	3	10	45 A	VRFO-1A	
		11			12			
		13			14			
PANEL LP2 VIA XFMR T2	70 A	15	3	3	16	50 A	DOAS-1	
		17			18			
		19			20			
PANEL HP2	150 A	21	3	3	22	150 A	PANEL LP3 VIA XFMR T3	
		23			24			
		25			26			
SPACE	--	27	3	3	28	--	SPACE	
		29			30			
		31			32			
SPACE	--	33	3	3	34	--	SPACE	
		35			36			
		37			38			
SPACE	--	39	3	3	40	--	SPACE	
		41			42			
		43			44			
		45			46			
		47			48			
		49			50			
		51			52			
		53			54			
		55			56			
		57			58			
		59			60			
		61			62			
		63			64			
		65			66			
		67			68			
		69			70			
		71			72			
		73			74			
		75			76			
		77			78			
		79			80			
		81			82			
		83			84			

Notes:

Panel: HP1

Location: ELEC 119 | Volts: 480Y/277 | A.I.C. Rating: 65kA
Supply From: MDP1 | Phases: 3 | Mains Type: MLO
Mounting: Surface | Wires: 4 | Mains Rating: 150.0 A
Enclosure: Indoor | MCB Rating: 150.0 A

Notes:

Circuit Description	Trip	Circuit Number	Number of Poles	Number of Poles	Circuit Number	Trip	Circuit Description	
LTG - POLE LIGHTS	20 A	1	1	1	2	20 A	LTG - POLE LIGHTS, EMS SIGN, & BOLLARDS	
LTG - FLAGPOLE LIGHTS	20 A	3	1	1	4	20 A	LTG - BUILDING MOUNTED LIGHTS	
LTG - BOLLARDS	20 A	5	1	1	6	20 A	LTG - BUNK CORRIDOR LIGHTING	*
* LTG - BUNK CORRIDOR LIGHTING	20 A	7	1	1	8	20 A	EXTERIOR BUILDING TAPE LIGHTING	*
LTG - RM 106 TO 120	20 A	9	1	1	10	20 A	EXTERIOR PATIO LIGHTING	
LTG - RM 100 TO 105 &122	20 A	11	1	1	12	20 A	LTG - UNDERCABINET RM 102	*
* LTG - RM 123 TO 135, 140 TO 143	20 A	13	1	1	14	20 A	LTG - RM 140	
SPARE	20 A	15	1	1	16	20 A	SPARE	
SPARE	20 A	17	1	1	18	20 A	SPARE	
SPARE	20 A	19	1	1	20	20 A	SPARE	
SPARE	20 A	21	1	1	22	20 A	SPARE	
SPACE	--	23	1	1	24	--	SPACE	
SPACE	--	27	1	1	28	--	SPACE	
SPACE	--	29	1	1	30	--	SPACE	

Notes:

Panel: LP1

Location: ELEC 119 | Volts: 208Y/120 | A.I.C. Rating: 42kA
Supply From: | Phases: 3 | Mains Type: MCB
Mounting: Surface | Wires: 4 | Mains Rating: 400.0 A
Enclosure: Indoor | MCB Rating: 400.0 A

Notes:

Circuit Description	Trip	Circuit Number	Number of Poles	Number of Poles	Circuit Number	Trip	Circuit Description	
REC - FITNESS 123	20 A	1	1		2			
REC - FITNESS 123	20 A	3	1	1	4	20 A	BC-02/03, VRFI-AVIT/01/09	
REC - FITNESS 123	20 A	5	1	1	6	20 A	REC - APP BAY	
REC - FITNESS 123	20 A	7	1	1	8	20 A	REC - FITNESS 123	
REC - FITNESS 123	20 A	9	1	1	10	20 A	REC - KITCHEN & DAYROOM 122	
REC - FITNESS 123	20 A	11	1	1	12	20 A	REC - KITCHEN COUNTER	
REC - FITNESS 123	20 A	13	1	1	14	20 A	REC - KITCHEN COUNTER	
REC - FITNESS 123	20 A	15	1	1	16	20 A	DISHWASHER	**
REC - FITNESS 123	20 A	17	1	1	18	20 A	REC - BUNK 132	*
REC - FITNESS 123	20 A	19	1	1	20	20 A	REC - BUNK 133	*
REC - FITNESS 123	20 A	21	1	1	22	20 A	REC - BUNK 134	*
REC - FITNESS 123	20 A	23	1	1	24	20 A	REC - BUNK 138	*
		25		1	26	20 A	REC - BUNK 139	*
IT ROOM UPS1	100 A	27	3	1	28	20 A	REC - OPEN BUNK 140	*
		29		1	30	20 A	REC - OPEN BUNK 140	*
REC - WATER BOTTLE FILLER	20 A	31	1		32			
REC - MECHANICAL 124, LAUNDRY 125	20 A	33	1	3	34	225 A	PANEL 'LP1A'	
REC - ELEC 119	20 A	35	1		36			
* REC - BUNK 129	20 A	37	1	1	38	20 A	SPARE	
* REC - BUNK 130	20 A	39	1	1	40	20 A	REC - TRAINING AREA 102	
* REC - BUNK 131	20 A	41	1	1	42	20 A	DCP-1	
EXTERIOR BUILDING MOUNTED SIGNAGE	20 A	43	1	1	44	20 A	GWH-1	
EXTERIOR BUILDING MOUNTED SIGNAGE	20 A	45	1	1	46	20 A	DET-1	
EXTERIOR BUILDING MOUNTED SIGNAGE	20 A	47	1	1	48	20 A	BT-1	
REC - DECON	20 A	49	1		50			
REC - AV/STORAGE 103	20 A	51	1	2	52	20 A	BP-1	
* REC - OPEN BUNK	20 A	53	1		54			
DRYER	30 A	55	1	2	56	20 A	BC-04, VRFI-02 - VRFI-08	
* REC - LINEN STORAGE 128	20 A	57	1	1	58	20 A	SPARE	
BP-2	20 A	59	2	1	60	20 A	SPARE	
		61		1	62	20 A	SPARE	
SPACE	--	63	1	1	64	--	SPACE	
SPACE	--	65	1	1	66	--	SPACE	
SPACE	--	67	1	1	68	--	SPACE	
SPACE	--	69	1	1	70	--	SPACE	
SPACE	--	71	1	1	72	--	SPACE	

Notes:

Panel: LP3

Location: MEZZANINE 200 | Volts: 208Y/120 | A.I.C. Rating: 42kA
Supply From: | Phases: 3 | Mains Type: MCB
Mounting: Surface | Wires: 4 | Mains Rating: 400.0 A
Enclosure: Indoor | MCB Rating: 400.0 A

Notes:

Circuit Description	Trip	Circuit Number	Number of Poles	Number of Poles	Circuit Number	Trip	Circuit Description
OVERHEAD DOOR - APPARATUS BAY 144	30 A	1	2	2	2	30 A	OVERHEAD DOOR - APPARATUS BAY 144
		3			4		
OVERHEAD DOOR - APPARATUS BAY 144	30 A	5	2	2	6	30 A	OVERHEAD DOOR - APPARATUS BAY 144
		7			8		
OVERHEAD DOOR - APPARATUS BAY 144	30 A	9	2	2	10	30 A	OVERHEAD DOOR - APPARATUS BAY 144
		11			12		
OVERHEAD DOOR - APPARATUS BAY 144	30 A	13	2	2	14	30 A	OVERHEAD DOOR - APPARATUS BAY 144
		15			16		
OVERHEAD DOOR - APPARATUS BAY 144	30 A	17	2	2	18	30 A	OVERHEAD DOOR - APPARATUS BAY 144
		19			20		
OVERHEAD DOOR - APPARATUS BAY 144	30 A	21	2	2	22	30 A	OVERHEAD DOOR - APPARATUS BAY 144
		23			24		
OVERHEAD DOOR - APPARATUS BAY 144	30 A	25	2	2	26	30 A	OVERHEAD DOOR - APPARATUS BAY 144
		27			28		
REC - CORRIDOR 145	20 A	29	1	2	30	30 A	OVERHEAD DOOR - APPARATUS BAY 144
		31			32		
PANEL LP3A	225 A	33	3	2	34	60 A	VRFO-2
		35			36		
		37		1	38	20 A	HVLS-1
BC-04, VRFI-18 - VRFI-21	20 A	39	2	1	40	20 A	HVLS-1
EMS SERVER	30 A	41	1	1	42	20 A	REC - WATER/SPRINKLER
STACKED DRYER	30 A	43	2	1	44	20 A	REC - STORAGE
		45		1	46	20 A	AIRVAC CONTROL PANEL #1
REC - IT ROOM	20 A	47	1	1	48	20 A	AIRVAC CONTROL PANEL #2
BC-01, VRFI-10 - 17	20 A	49	2	1	50	20 A	REC - EXTERIOR EMS SIDE
		51		2	52	50 A	SCBA WASHER
DECON UNIT	20 A	53	2		54		
		55		1	56	20 A	CO/NO2 CONTROL PANEL
GEAR DRYER	30 A	57	3	1	58	20 A	REC - GENERAL
		59		1	60	20 A	SPARE
		61		1	62	20 A	SPARE
SPACE		63	1	1	64	--	SPACE
SPACE	--	65	1	1	66	--	SPACE
SPACE	--	67	1	1	68	--	SPACE
SPACE	--	69	1	1	70	--	SPACE
SPACE	--	71	1	1	72	--	SPACE

Notes:

Panel: LP1A

Location: STORAGE 105 | Volts: 208Y/120 | A.I.C. Rating: 42kA
Supply From: | Phases: 3 | Mains Type: MCB
Mounting: Surface | Wires: 4 | Mains Rating: 225.0 A
Enclosure: Indoor | MCB Rating: 225.0 A

Notes:

Circuit Description	Trip	Circuit Number	Number of Poles	Number of Poles	Circuit Number	Trip	Circuit Description
REC - REFRIGERATOR	20 A	1	1	1	2	20 A	REC - CORRIDOR 126
REC - REFRIGERATOR	20 A	3	1	1	4	20 A	REC - CORRIDOR 106
REC - KITCHEN & DAYROOM 122	20 A	5	1	1	6	20 A	REC - WORK ROOM 116
REC - KITCHEN & DAYROOM 122, EXTERIOR	20 A	7	1	1	8	20 A	REC - BATHROOMS 117, 120, JAN. 121
REC - KITCHEN COUNTER	20 A	9	1	1	10	20 A	REC - WATER BOTTLE FILLER
REC - KITCHEN COUNTER	20 A	11	1	1	12	20 A	REC - T & S 135-137
REC - KITCHEN COUNTER	20 A	13	1	1	14	20 A	FB - KITCHEN & DAYROOM 122
MICROWAVE	20 A	15	1	1	16	20 A	REC - EXTERIOR
COFFEE MAKER	20 A	17	1	1	18	20 A	REC - STORAGE/TURNOUT 114-115
ICE MAKER	20 A	19	1	1	20	20 A	FB - TRAINING AREA 102
REC - GAS RANGE	20 A	21	1	1	22	20 A	FB - TRAINING AREA 102
JB - GAS RANGE HOOD	20 A	23	1	1	24	20 A	FB - TRAINING AREA 102
REC - REFRIGERATOR	20 A	25	1	1	26	20 A	REC - TRAINING AREA 102
REC - TRAINING ROOM COUNTER	20 A	27	1	1	28	20 A	FB - TRAINING AREA 102
REC - TRAINING ROOM COUNTER	20 A	29	1	1	30	20 A	KEF-1
REC - TRAINING ROOM COUNTER	20 A	31	1	1	32	20 A	FB - TRAINING AREA 102
REC - CORRIDOR	20 A	33	1	1	34	20 A	DCP-2
CAD ALERTING	20 A	35	1	1	36	20 A	POWER BAR - TURNOUT GEAR
POWER BAR - TURNOUT GEAR	20 A	37	1	1	38	20 A	POWER BAR - TURNOUT GEAR
POWER BAR - TURNOUT GEAR	20 A	39	1	1	40	20 A	POWER BAR - TURNOUT GEAR
POWER BAR - TURNOUT GEAR	20 A	41	1	1	42	20 A	POWER BAR - TURNOUT GEAR
REC - LAUNDRY 125	20 A	43	1	1	44	20 A	DRYER
DRYER	20 A	45	1	1	46	20 A	WASHER
WASHER	20 A	47	1	1	48	20 A	EF-3
SPARE	20 A	49	1	1	50	20 A	SPARE
SPARE	20 A	51	1	1	52	20 A	SPARE
SPARE	20 A	53	1	1	54	20 A	SPARE
SPARE	20 A	55	1	1	56	20 A	SPARE
SPARE	20 A	57	1	1	58	20 A	SPARE
SPACE	--	59	1	1	60	--	SPACE
SPACE	--	61	1	1	62	--	SPACE
SPACE	--	63	1	1	64	--	SPACE
SPACE	--	65	1	1	66	--	SPACE
SPACE	--	67	1	1	68	--	SPACE
SPACE	--	69	1	1	70	--	SPACE
SPACE	--	71	1	1	72	--	SPACE

Notes:

Panel: LP3A

Location: MEZZANINE 200 | Volts: 208Y/120 | A.I.C. Rating: 42kA
Supply From: LP3 | Phases: 3 | Mains Type: MCB
Mounting: Surface | Wires: 4 | Mains Rating: 225.0 A
Enclosure: Indoor | MCB Rating: 225.0 A

Notes:

Circuit Description	Trip	Circuit Number	Number of Poles	Number of Poles	Circuit Number	Trip	Circuit Description	
REC - REFRIGERATOR	20 A	1	1	1	2	20 A	REC - APPARATUS BAY 144	
REC - KITCHEN COUNTER	20 A	3	1	1	4	20 A	REC - APPARATUS BAY 144	
REC - COFFEE MAKER	20 A	5	1	1	6	20 A	REC - APPARATUS BAY 144	
REC - MICROWAVE	20 A	7	1	1	8	20 A	REC - APPARATUS BAY 144	
KITCHEN EXHAUST	20 A	9	1	1	10	20 A	REC - APPARATUS BAY 144	
REC - COFFEE MAKER	20 A	11	1	1	12	20 A	CONTROL PANEL	
REC - MICROWAVE	20 A	13	1	1	14	20 A	AVF-1	
REC - EXTERIOR	20 A	15	1	1	16	20 A	AVF-1	
REC - EMS DAYROOM 146	20 A	17	1	1	18	20 A	AVF-1	
EMS OFFICE II 148	20 A	19	1	1	20	20 A	AVF-1	
REC - GENERAL STORAGE	20 A	21	1	1	22	20 A	GWH-1	
EMS OFFICE I 152	20 A	23	1	1	24	20 A	EF-2, EF-5, KEF-2	
REC - EMS STORAGE	20 A	25	1		26			
REC - GROUNDS STORAGE	20 A	27	1	3	28	20 A	EUH-1	
REC - TOOL ROOM, TRAINING TOWER	20 A	29	1		30			
ICE CUBE MACHINE	20 A	31	1	1	32	20 A	AVF-1	
REC - TOOL ROOM 155	20 A	33	1	1	34	20 A	B-1	
REC - TOOL ROOM 155	20 A	35	1	1	36	20 A	B-2	
REC - TOOL ROOM 155	20 A	37	1	1	38	20 A	REC - APPARATUS BAY 144	
REC - SCBA 153	20 A	39	1	1	40	20 A	VP-1	
RCPT APPARATUS BAY 144	20 A	41	1	1	42	20 A	REC - EXTERIOR EMS SIDE	
		43			44	--	SPACE	
TRAINING TOWER WINCH	30 A	45	3	1	46	--	SPACE	
		47		1	48	--	SPACE	
		49		1	50	20 A	REC - EXTERIOR EMS SIDE	
TRAINING TOWER WINCH	30 A	51	3	2	52	20 A	HVLS-2	
		53			54			
REC - MEZZANINE	20 A	55	1	2	56	20 A	HVLS-2	
HVLS-2		57	2		58			
	20 A	59		2	60	20 A	HVLS-2	
SPACE	--	61	1		62			
SPACE	--	63	1	1	64	--	SPACE	
SPACE	--	65	1	1	66	--	SPACE	
SPACE	--	67	1	1	68	--	SPACE	
SPACE	--	69	1	1	70	--	SPACE	
SPACE	--	71	1	1	72	--	SPACE	

Notes:

Panel: LP2

Location: STORAGE/ UNIFORMS... | Volts: 208Y/120 | A.I.C. Rating: 42kA
Supply From: | Phases: 3 | Mains Type: MCB
Mounting: Surface | Wires: 4 | Mains Rating: 150.0 A
Enclosure: Indoor | MCB Rating: 150.0 A

Notes:

Circuit Description	Trip	Circuit Number	Number of Poles	Number of Poles	Circuit Number	Trip	Circuit Description	
WATCH OFFICE 111	20 A	1	1	1	2	30 A	MONUMENT SIGN	
REC - WATCH OFFICE 111	20 A	3	1	1	4	20 A	EXTERIOR BUILDING MOUNTED SIGNAGE	
REC - CONFERENCE 110	20 A	5	1	1	6	20 A	GARBAGE DISPOSAL	
REC - CONFERENCE 110	20 A	7	1	1	8	20 A	REC - REFRIGERATOR	
REC - CHIEF OFFICE 109, EXTERIOR	20 A	9	1	1	10	20 A	REC - COPIER	
REC - DEP. CHIEF OFFICE 112	20 A	11	1	1	12	20 A	FB - TRAINING AREA 102	
REC - LINE OFFICER OFFICE 113	20 A	13	1	1	14	20 A	REC - STORAGE/UNIFORMS	
REC - FIRE MARSHALL OFFICE 108	20 A	15	1	1	16	20 A	DISHWASHER	**
REC - ACCOUNTS OFFICE 107	20 A	17	1	1	18	20 A	IPLAYER RGB CONTROLLER	
REC - LOBBY 101, CORRIDOR 106	20 A	19	1	1	20	20 A	EF-2	
REC - CORRIDOR 106, EXTERIOR	20 A	21	1	1	22	20 A	REC - FITNESS 123	
REC - EXTERIOR	20 A	23	1	1	24	20 A	SPARE	
SPARE	20 A	25	1	1	26	20 A	SPARE	
SPARE	20 A	27	1	1	28	20 A	SPARE	
SPARE	20 A	29	1	1	30	20 A	SPARE	
SPARE	20 A	31	1	1	32	20 A	SPARE	
SPARE	20 A	33	1	1	34	20 A	SPARE	
SPACE	--	35	1	1	36	--	SPACE	
SPACE	--	37	1	1	38	--	SPACE	
SPACE	--	39	1	1	40	--	SPACE	
SPACE	--	41	1	1	42	--	SPACE	

Notes:

Panel: HP2

Location: MEZZANINE 200 | Volts: 480Y/277 | A.I.C. Rating: 65kA
Supply From: MDP1 | Phases: 3 | Mains Type: MLO
Mounting: Surface | Wires: 4 | Mains Rating: 150.0 A
Enclosure: Indoor | MCB Rating: 150.0 A

Notes:

Circuit Description	Trip	Circuit Number	Number of Poles	Number of Poles	Circuit Number	Trip	Circuit Description	
LTG - EMS CORRIDOR LIGHTING	20 A	1	1	1	2	20 A	LTG - RM 156, 200, 201	
LTG - APPARATUS BAY 144	20 A	3	1	1	4	20 A	LTG - EXTERIOR FLOOD LIGHTS	
		5		1	6	20 A	LTG - OVERHEAD DOOR LIGHTS	
EF-1	15 A	7	3		8			
		9		3	10	15 A	AC-1	
SCBA COMPRESSOR (2) 40 A		11			12			
		13	3	1	14	20 A	SPARE	
		15		1	16	20 A	SPARE	
SPARE	20 A	17	1	1	18	20 A	SPARE	
SPACE	--	19	1	1	20	--	SPACE	
SPACE	--	21	1	1	22	--	SPACE	
SPACE	--	23	1	1	24	--	SPACE	
SPACE	--	25	1	1	26	--	SPACE	
SPACE	--	27	1	1	28	--	SPACE	
SPACE	--	29	1	1	30	--	SPACE	

Notes:

Panel: ITP

Location: IT 118 | Volts: 120V | A.I.C. Rating: 42kA
Supply From: | Phases: 1 | Mains Type: MCB
Mounting: Surface | Wires: 3 | Mains Rating: 100.0 A
Enclosure: Indoor | MCB Rating: 100.0 A

Notes:

Circuit Description	Trip	Circuit Number	Number of Poles	Number of Poles	Circuit Number	Trip	Circuit Description	
SERVER	30 A	1	1	1	2	20 A	CARD ACCESS PANEL	
SERVER	30 A	3	1	1	4	20 A	CARD ACCESS PANEL	
SERVER	30 A	5	1	1	6	20 A	SECURITY CONTROL PANEL	
REC - IT 118	20 A	7	1	1	8	20 A	FACP	***
REC - IT 118	20 A	9	1	1	10	20 A	SPARE	
SPARE	20 A	11	1	1	12	20 A	SPARE	
SPARE	20 A	13	1	1	14	20 A	SPARE	
SPARE	20 A	15	1	1	16	20 A	SPARE	
SPARE	20 A	17	1	1	18	20 A	SPARE	
SPACE	--	19	1	1	20	--	SPACE	
SPACE	--	21	1	1	22	--	SPACE	
SPACE	--	23	1	1	24	--	SPACE	
SPACE	--	25	1	1	26	--	SPACE	
SPACE	--	27	1	1	28	--	SPACE	
SPACE	--	29	1	1	30	--	SPACE	

Notes:

GENERAL PANEL SCHEDULE NOTES:

* = PROVIDE AFCI TYPE CIRCUIT BREAKER IN THIS BREAKER POSITION.
** = PROVIDE COMBINATION AFCI/GFCI TYPE CIRCUIT BREAKER IN THIS BREAKER POSITION.
*** = PROVIDE LOCKABLE HANDLE ATTACHMENT ON THIS BREAKER POSITION.

MANNS WOODWARD STUDIOS
ARCHITECTURE + MASTER PLANNING
8098 SANDPIPER CIR, SUITE H
NOTTINGHAM, MD 21236
☎ 410-344-1460
INFO@MWSARCH.COM
WWW.MWSARCH.COM

CONSULTANT:

DEDC
ENGINEERING | DESIGN | CONSULTING
Delaware
312 S. Chapel Street
Newark, DE 19711
Phone
302.738.7172
Fax
302.738.7175
www.dedc-eng.com
Pennsylvania
Dunne Morris Plaza
30 S. 17th Street
Suite 820
Philadelphia, PA 19103
Phone
267.804.7286

SEAL:

COMMONWEALTH OF PENNSYLVANIA
REGISTERED PROFESSIONAL
SCOTT W. FRENCH
ENGINEER
PE084137

EXETER TOWNSHIP
EMERGENCY SERVICES FACILITY
70 GIBRALTAR ROAD
READING PA 19606

PROJECT NUMBER: 25-049

SUBMISSION:
BID SET

ORIGINAL ISSUE DATE:
10/01/2026

SHEET REVISION SCHEDULE:

No.	DATE
2	10/22/26

LAST PROJECT REVISION: No 2 | 10/22/26

ELECTRICAL PANEL SCHEDULES

SHEET NUMBER:

E606

10/23/2026 11:16:18 AM

ALL DRAWINGS ARE PROTECTED BY FEDERAL COPYRIGHT BY MANNS WOODWARD STUDIOS, INC. AND CAN NOT BE REPRODUCED OR MODIFIED IN ANY MANNER WITHOUT WRITTEN PERMISSION. DOCUMENTS MAY NOT BE USED IN PART OR WHOLE TO DEVELOP THE DESIGN OF ANOTHER BUILDING WITHOUT EXPRESS WRITTEN PERMISSION BY MANNS WOODWARD STUDIOS.

SECTION 00 11 00 – INSTRUCTIONS TO BIDDERS

1. GENERAL

1.1 The drawings and specifications are complimentary via the Building Connected Program. Any labor and/or material not shown on the drawings but called for in the specifications or any labor and/or material not called for in the specifications but shown on the drawings, shall be furnished by the contractor as shown and called for in both.

1.2 DEFINED TERMS

1.2.1 Terms used in these Instructions to Bidders, which are defined in the General Conditions of the Contract for Construction (the “General Conditions”), have the meanings assigned to them in the General Conditions. The term "Bidder" means one who submits a Bid directly to Owner, as distinct from a sub-Bidder, who submits a bid to a Bidder. The term "Successful Bidder" means the lowest, qualified, responsible, and responsive Bidder to whom Owner (on the basis of Owner's evaluation as hereinafter provided) makes an award. The term "Bidding Documents" includes the Advertisement for Bids, Instructions to Bidders, the Bid Form, and the Contract Documents (including all Addenda issued prior to receipt of Bids). The numbering system refers to Articles.

2. COPIES OF BIDDING DOCUMENTS

2.1 In order to Bid the Project, complete sets of PDF documents must be obtained.

2.2 Complete sets of Bidding Documents must be used in preparing Bids; neither Owner, Architect, or Construction Manager assumes any responsibility for errors or misinterpretations resulting from the use of incomplete sets of Bidding Documents. Bidding Documents consist of Contract Documents (and all reference standards), specifications, addenda, and drawings. Bidder is responsible to make sure that the set of Bidding Documents is complete and that any printed contract document is legible and represents properly all the information as represented in the PDF file.

2.3 Owner, Architect, and Construction Manager, in making copies of the Bidding Documents available on the above terms, do so only for the purpose of obtaining Bids for the Work and do not confer a license or grant for any other use.

3. QUALIFICATIONS OF BIDDERS

3.1 The following information must be completed and submitted when requested by the Construction Manager.

3.1.1 The Contractors Qualification Statement A305-2020 found in Section 00 1940. Use additional pages to complete any of the sections if more space is needed. Bidder’s failure to fully and accurately disclose all information requested in the Request for Qualifications questionnaire

shall constitute grounds for Bidder's disqualification from being considered the lowest responsive, responsible Bidder.

3.2 To demonstrate qualifications to perform the Work, each Bidder must be prepared to submit with their bid proposal, written evidence such as financial data, insurance certificates, previous experience of the Bidder and its assigned personnel, present commitments, and any other information that may be requested by the Owner. Each Bid must contain evidence of Bidder's qualification to do business in the Commonwealth of Pennsylvania, or covenant to obtain such qualification prior to award of the Contract. Owner reserves the right to reject Bidder if he cannot satisfy all of the Qualification Requirements, including those listed in the Technical Specifications.

3.3 In determining the lowest responsible Bidder, the Owner will consider the integrity, efficiency, experience of the Bidder and its assigned personnel, promptness, current workload, financial capability, performance on recent projects, references from owners, architects, and engineers, list of potential sub-contractors, schedule of values, and ability to successfully and timely complete the Project. The apparent low Bidder must demonstrate competency and provide any or all of the above information requested within three (3) calendar days of request. Owner reserves the right to reject the Bidder as non-responsive if all the information is not received on time and/or does not reasonably satisfy the Owner's evaluation process.

3.4 In addition to all the requirements specified in Articles 3.1, 3.2 and 3.3 regarding qualifications of Bidders, the Owner will evaluate Bidders using the following additional criteria:

3.4.1 The Bidder and its assigned personnel must have successfully performed a minimum of 3 previous Pennsylvania public municipal projects within the last 5 years of similar type or a contract value of at least seventy-five percent (75%) of the amount of the Bidder's Base Bid. Provide references including telephone number and contact person.

3.4.2 The Bidder shall perform not less than ten percent (10%) of the actual construction Work with staff employed directly by the Bidder. Project Management and Office Staff shall NOT be included in this percentage.

3.4.3 The Bidder, or its assigned personnel, must have successfully performed at least 3 Pennsylvania public municipal projects within the last 5 years where they have managed multiple trades and coordinated and scheduled all the activities for projects as per Article 3.4.1. Provide references including telephone number and contact person.

3.4.4 An Agreement of Surety certifying that the Surety Company is committed to provide the Bidder with a Performance Bond and Payment Bond each in the amount of one hundred percent (100%) of the contract amount. The Surety Company must have an AM Best rating of A- or higher and a financial rating of Class X or higher.

3.4.5 The Bidder's performance on previous projects including claims, litigation, coordination of work, staffing, and timely completion. If it is determined that the Bidder has not fully performed previous projects in a coordinated, timely, and good and workmanlike manner, the Owner reserves the right to reject the Bid.

3.4.6 The Bidder shall also refer to Article 11.

3.5 Owner shall be entitled to recover attorneys' fees and costs incurred in defending any unsuccessful challenge brought by a Bidder in its own name or as proxy for a Municipality resident to Owner's award of a contract to another Bidder, from the Bidder who brought the unsuccessful challenge as more fully set forth in Section 13.8.1 of the General Conditions of Contract.

3.6 All Bidders should be aware that the Owner encourages and promotes MBE (Minority Business Enterprise) and WBE (Women's Business Enterprise) participation for this Project. Bidders are encouraged to do their own research on the qualifications, and other factors, in preparing a comprehensive and responsible bid.

4. EXAMINATION OF CONTRACT DOCUMENTS AND SITE

4.1 It is the responsibility of each Bidder, before submitting a Bid, to:

1. Examine the Contract Documents thoroughly.
2. Visit the site to become familiar with local conditions that may affect the cost, progress, performance, or furnishing the Work.
3. Consider federal, state, and local laws and regulations that may affect cost, progress, performance, or furnishing of the Work.
4. Study and carefully correlate Bidder's observations with the Contract Documents.
5. Notify Architect and Construction Manager of any conflicts, errors, or discrepancies discovered in the Contract Documents.

4.1.1 REVIEW OF DRAWINGS AND SPECIFICATIONS

A. Bidders shall thoroughly examine and be familiar with the Specifications and Drawings. The failure or omission of any Bidder to receive or examine any form, instrument, document, or visit the site and acquaint himself with conditions there existing, shall in no way relieve any Bidder from obligation with respect to his or her Bid. By submitting a Bid, the Bidder agrees and warrants that he/she has examined the site and the Specifications and Drawings and, where Specifications and/or Drawings require in any part of the Work a given result to be produced, that the Specifications and Drawings are adequate, and the required result can be produced under the Specifications and Drawings. No claim for any additional costs will be allowed because of alleged impossibilities in the production of the results specified or because of inadequate or improper plans and specifications and whenever a result is required, the successful Bidder shall furnish any and all extras and make any changes needed to produce the required result for the sum stated in the form of proposal.

B. Should any Bidder find discrepancies, duplications, or omissions in the documents or have doubt as to the meaning expressed by the Contract Documents, he/she shall make inquiry at once in writing to the Architect and Construction Manager. Where changes, corrections, or clarifications to Contract Documents are deemed necessary by the Architect and/or Construction Manager, he will issue written Addenda

accordingly. Addenda shall be a part of the Contract Documents. No oral, telephone, email, or letter instructions will be considered as having effect upon the Contract Documents; Addenda only shall constitute change to them. Bidders and sub-Bidders are urged to make early examination of Contract Documents and make inquiries about them, if necessary, even though prices may not be determined until late in the bidding period.

4.2 The site may be made available for visits at the pre-bid conference and at the other specific designated dates and times determined at the pre-bid conference.

4.3 Information and data reflected in the Contract Documents with respect to underground facilities at or contiguous to the site is based upon information and data furnished to Owner and Architect and/or Construction Manager by owners of such underground facilities or others, and Owner and Architect and/or Construction Manager do not assume responsibility for the accuracy or completeness thereof. Successful Bidder shall verify the location of all underground utilities prior to any excavation.

4.4 Successful Bidder for the Site Contract is responsible, on behalf of the Owner, for providing the physical markings of all existing utilities including those on site as indicated on the drawings or that may be identified in the field. The locations shown on the drawings are approximate. The Bidder must include in his proposal the cost for hand-dug test holes, or other means, to ascertain the precise position of such underground facilities on the site owned by the Owner. This verification should be performed for any utilities to be relocated, removed, modified, or that may otherwise interfere with planned work. The utilities in the public right of way will be identified and marked by the appropriate facility owner as per the requirements of the PA One Call Act as amended. Physical layout is to be performed in full compliance with the PA One Call PA Act 287 of 1974 as amended by Act 18 of 1996 and Act 50 of 2017.

4.5 The Owner, Architect, and Construction Manager will not be responsible for the adequacy of data furnished to prospective Bidders on subsurface conditions, underground facilities, and other physical conditions. This information is provided based on information available. Bidder assumes responsibility for verifications, adjustments, and modifications that may be required since this is generally recognized as inherent to the work of the Contract Documents.

4.6 Before submitting a Bid, each Bidder will, at Bidder's expense, make or obtain any additional examinations, investigations, explorations, tests and studies, and obtain any additional information and data which pertain to the physical conditions (surface, subsurface, and underground facilities) at or contiguous to the site or otherwise which may affect cost, progress, performance, or furnishing the Work and which Bidder deems necessary to determine its Bid for performing and furnishing the Work in accordance with the time, price, and other terms and conditions of the Contract Documents.

4.7 On request in advance, Owner will provide each Bidder access to the site to conduct such explorations and tests, as each Bidder deems necessary for submission of a Bid. Bidder shall fill all holes, clean up, and restore the site to its former condition upon completion of such explorations.

4.8 The lands upon which the Work is to be performed, rights-of-way, and easements for access thereto and other lands designated for use by the Bidder in performing the Work are identified in the Contract Documents. All additional lands and access thereto required for temporary construction facilities or storage of materials and equipment are to be provided by Bidder. Easements for permanent structures

or permanent changes in existing structures are to be obtained and paid for by Owner unless otherwise provided in the Contract Documents.

4.9 The submission of a Bid will constitute an incontrovertible representation by Bidder that Bidder has complied with every requirement of the Bidding Documents and, that without exception, the Bid is premised upon performing and furnishing the Work required by the Contract Documents and such means, methods, techniques, sequences, or procedures of construction as may be indicated in or required by the Contract Documents, and that the Contract Documents are sufficient in scope and detail to indicate and convey understanding of all terms and conditions for performance and furnishing of the Work.

5. SCOPE

5.1 Contracts will be awarded in (6) prime contracts: Separate bids shall be submitted for: (BP-01) Site Construction, (BP-02) General Construction, (BP-03) Fire Protection Construction, (BP-04) Plumbing Construction, (BP-05) Mechanical Construction and (BP-06) Electrical Construction.

5.2 Each prime contractor shall furnish all labor, equipment, and materials necessary to complete the work called for and implied by the plans and specifications.

5.3 Upon issuance of the Letter of Intent to Award to the Electrical and General Construction Prime Contractors, the Owner and Construction Manager request that the following submittals be provided for review due to anticipated lead times: Structural Steel, Pre-Engineered Metal Building System, Generator, and Automatic Transfer Switch (ATS). Submission of these items **prior to contract execution shall be at the Prime Contractor's sole risk. Following issuance of** the Notice to Proceed, the Prime Contractor may submit payment applications for reimbursement of approved costs associated with these submittals.

6. TIME

6.1 The Contract Documents include potential assessment of Liquidated Damages. Refer to AIA Document A132 – 2019, Standard Form of Agreement Between Owner and Contractor, Construction Manager as Adviser Edition.

7. INTERPRETATIONS OF CONTRACT DOCUMENTS PRIOR TO BIDDING

7.1 If any person submitting a bid for construction of the Work is in doubt as to the true meaning or intent of any part of the proposed Contract Documents, or find discrepancies or omissions, they shall submit a request for information to the Architect and Construction Manager no later than the date indicated in the Bid Schedule.

7.2 Interpretation or correction of proposed Contract Documents will be made only by Addendum and will be released to all prime contract bidders of record. The Owner, Architect, and Construction Manager will not be responsible for any other explanations or interpretations of the proposed Contract Documents.

7.3 During the bidding period, Bidders may be furnished these Bid Addenda modifying the Bid Documents. Any such Addenda shall be taken into account in submitting a Bid and shall form a part of the Contract Documents. Receipt of Bid Addenda must be identified on Bid Form.

7.4 When mistakes or omissions occur in the drawings and/or specifications, they shall be brought to the Construction Manager's attention before proceeding with the work.

7.5 All construction shall be in accordance with all federal, state, and local building codes and ordinances, which shall take precedence over these drawings and specifications.

7.6 Manufacturer's directions – All manufacturer's articles, materials and equipment shall be supplied, installed, connected, cleaned or conditioned in strict accordance with the manufacturer's printed directions.

7.7 If there is a discrepancy between the contract documents and the information on Building Connected the contract document requirements shall prevail in all cases.

8. REQUESTS FOR INFORMATION

8.1 If additional information is required concerning the meaning or intent of the Bid Documents, all questions and requests for information must be submitted electronically via Building Connected.

9. SUBMISSION OF PROPOSALS

9.1 Bids shall be submitted at the time and place indicated in the Advertisement for Bids and shall be enclosed in an opaque, sealed envelope, marked with the Project title, Contract No., and, if applicable, the designated portion of the Project for which the Bid is submitted. Envelopes shall contain the name and address of the Bidder and accompanied by the documents listed below. If the Bid is sent through the mail or other delivery system, the sealed envelope shall be enclosed in another envelope with the notation "BID ENCLOSED" on the face of it. Receipt of Bid is acknowledged when delivered to the Owner and not when mailed.

9.2 Each Bidder shall submit two (2) hard copies of the complete bid submission.

The following shall be included in the bid submission:

1. Form of Proposal, fully executed and notarized
2. Bid Bond or Certified Check or Cashier's check in the amount of 10% of the Bid total and shall include Consent of Surety and Power of Attorney
3. Non-Collusion Affidavit, Signed and Sealed
4. Non-Discrimination Clause, Signed and Sealed
5. PA Public Works Employment Verification Form (E-Verify)
6. Letter of Insurer

Note that the following will be required to be submitted by ALL Bidders at the request of the Construction Manager within 48 hours of bid submission:

1. Bidder's Qualifications, AIA A305, completed
2. Schedule of Values
3. List of Subcontractors
4. Safety Questionnaire

Note that the successful bidder will be required to submit the following documents and any other documents deemed necessary by the Construction Manager upon issuance of Letter of Intent to Award:

1. Certificate of Insurance
2. Performance Bond in the amount of 100%
3. Payment Bond in the amount of 100%
4. No Lien Agreement

10. BIDDERS RESPONSIBILITIES

10.1 Bidders will be given permission to withdraw any proposal after it has been received by the Owner, provided the Bidder or his agent duly authorized to act for him, personally appears at the Owner's Business Office with a written request signed by the Bidder prior to the time set forth for the opening of the Bids. At the time set for the opening of Bids, the withdrawn proposal will be returned to the Bidder. Such withdrawn proposals will not be opened or read at the Bid opening. Bids may not be modified after submittal.

10.2 Bids shall be irrevocable for ninety (90) days after the actual day of opening thereof unless the Owner is delayed in awarding the Contract due to the failure to receive a required approval/permit from one or more reviewing bodies/governmental agencies having jurisdiction over the Project, the sale of bonds or the award of a grant, in which case, Bids shall be irrevocable for (120) calendar days after Bid opening. Absent an exception for extending time for the award of the Contract, the Owner and the lowest responsible and responsive Bidder may mutually agree in writing to extend the time for the Owner to award the Contract.

10.3 Neither the designation of the apparent lowest responsible Bidder, nor the issuance of a Notice of Intent to Award to the Bidder so designated shall operate to release any other Bidder from its Bid. Each such other Bidder, unless earlier released from its Bid by specific action of the Owner, shall remain bound by its Bid until the earlier of (1) the date of actual execution by Owner of the Agreement Between Owner and Contractor with the Bidder whom the Award of Contract has been made, or (2) the expiration of the firm Bid period stipulated above.

10.4 Negligence by the Bidder in preparing his Bid confers no right of withdrawal or modification of his proposal after such proposal has been opened. No claims on account of mistakes or omissions of any proposal will be considered. Notwithstanding the above, a Bidder may withdraw his Bid within two (2) business days after the Bid opening time in accordance with the Public Contracts – Withdrawal of Bids Law, Act of January 23, 1974, P.L. 9, No. 4, 73 P.S. §1601 et seq., as amended. A Bid which has been

opened may be withdrawn only in accordance with the causes set forth in said Act and for no other reasons. Strict compliance with said Act is required to withdraw a Bid after opening.

10.5 By submitting a bid, the bidder covenants and agrees that he has carefully examined the site, the existing building and details, the documents and the Contract and that, from his own investigations, he has satisfied himself as to the nature and location of the work, the general and local conditions and all matters which may in any way affect the work or its performance and that as a result of such examination, he fully understands the intent and purpose thereof and his obligations thereunder, and that he will not make any claim for, or have any right to, damages because of any lack of information.

10.6 Each bidder is highly encouraged to visit the site to familiarize themselves with the existing conditions thereon pertaining to the work. The bidder shall examine all the documents relating to the Contract on which he is bidding before submitting a Bid. Each Contractor shall obtain the full knowledge by personal and careful inspection of all existing conditions at the site and of all requirements of the Bid Documents that affect the work. The Contractor accepts all such conditions and requirements and hereby assumes all responsibilities and costs resulting from their failure to obtain full knowledge of them.

10.7 The Bids are to include all work as shown or specified, including but not limited to Unit Prices, Alternates and Allowances as may be requested or noted. These prices are important and should be carefully considered when Bids are submitted, and in the form, as quoted, on the Bid forms, attached to these specifications. It is requested upon any bidder, to include all Alternate Bids or Unit Prices. Should any bidder fail to submit requested Alternate Bids or Unit Prices the bidder will be responsible for his omission and shall have no claim against the Owner, should the Owner award the Contract to a bidder who has submitted a more satisfactory and complete bid.

10.8 Any Unit Prices furnished by the Bidder as part of his Proposal Form shall be made a part of the Agreement and shall be the basis of compensation for any Unit Price work required on the Project.

10.9 The Bidder shall identify and list Prior to Award of Contract each Subcontractor or material supplier, with their respective prices, to be used on this Project in accordance with the General Conditions of the Contract.

10.10 Bidders shall also secure and submit Contractors Qualification Statements accordingly as noted below.

10.11 Bidder warrants to execute the Contract, furnish required Bonds in form as incorporated in the contract documents and furnish required insurance certificates and other items, in amounts specified or required, by the owner. Bidder shall also warrant beginning work in accordance with the Project Contract agreement.

10.12 All permits and inspections shall be obtained by each prime contractor and paid for by the owner. The contractors will be required to pay all license and/ or registration fees by the local community.

10.13 A Waiver of Liens shall be signed by The Contractor as requested by the CM or prior to the beginning of the ordering of material and before any work is performed on the property. The Waiver of Lien to be filed and indexed in the Berks County Prothonotary's Office is found as an attachment at the end of these specifications. The Contractor shall provide a Release of Liens for themselves and all suppliers prior to

application of final payment.

10.14 All work to be in accordance with applicable codes and ordinances adopted and/or as amended by the local Municipality, and the Commonwealth of Pennsylvania, Pennsylvania Uniform Construction Code, Act 45, The International Code Council, International Building Code – 2021 and Chapter 11 of the IBC 2018.

10.15 This Project falls under the Commonwealth of Pennsylvania Public Works Employment Verification Act, Act 127 of 2012, 43 P.S. § 167.1, which requires all public work contractors and subcontractors to utilize the Federal Government's E-Verify system to ensure that all employees performing work on public work projects are authorized to work in the United States. All Bidders are required to submit a Public Works Employment Verification Form as a precondition for the Contract Award.

10.16 The "Bid Bond," A.I.A. Document No. A310, of the American Institute of Architects, 2010 Edition, is hereby made a part of the Specifications as bound herein. The Bond is subject to all modifications as set forth hereinafter.

10.16.1 A bank cashier's, bank treasurer's certified check or bid bond in favor of Berks County in the amount of 10% of all base bids plus the amount of all add alternates, is required from each bidder and must be submitted electronically with the bid. It is understood the Bid Deposit will be forfeited to and retained by the owner as liquidated damages if the Proposal, or any part thereof, is accepted by the Owner and the Bidder fails to execute the contract and furnish Bonds within ten (10) days from the date of "Notice of Award". Should the owner fail to make any awards through no fault or failures on the part of the bidders, the Owner shall return said Bid Deposits.

10.16.2 Agreement of Surety: The "Agreement of Surety" form is to be provided to the Owner along with the bid proposal should the bid deposit submitted be other than a "Bid Bond". Attached is a 1-page sample letter to be signed and sealed from a corporate surety agreeing to provide a Performance Bond and Payment Bond in favor of the Owner as required for faithful performance and proper fulfillment of the contract. The Agreement is subject to all modifications as set forth hereinafter.

10.16.3 Non-Collusion Affidavit: The "Non-Collusion Affidavit" form is to be provided to the Owner along with the bid proposal by all prospective bidders. Attached is a document to be signed by all prospective bidders and sealed by notary, assuring the owner that the proposal for work is being submitted in good faith and without collusion with any other contractors or sub-contractors. The Affidavit is subject to all modifications as set forth hereinafter.

10.17 Non-Discrimination Clause: The "Non-Discrimination Clause" form is to be provided to the Owner along with the bid proposal by all prospective bidders. Attached is a document to be signed by all prospective bidders, assuring the owner that the proposal for work is being submitted in good faith and without collusion with any other contractors or subcontractors. The Clause is subject to all modifications as set forth hereinafter.

10.18 Performance and Payment Bonds: The "Performance Bond" and the "Payment Bond," A.I.A. Documents No. A312-2010, of the American Institute of Architects, are hereby made a part of the Specifications as

bound herein. The Bonds are subject to all modifications as set forth hereinafter.

10.19 Maintenance Bond – the execution of a maintenance bond is required, per Section 00 4316.

10.20 CONTRACTOR'S QUALIFICATION STATEMENT

10.20.1 Each Bidder is required to submit a Contractor's Qualification Statement (AIA A305-2020) with a sworn statement of his financial responsibility, technical qualifications and evidence that he has completed at least Five similar construction contracts within the last five (5) years, each with a minimum value of 75% of the total amount of the proposal submitted. In addition, the designated Project Manager and Superintendent must have at least ten (10) years' experience in similar projects with similar values and phased construction. The Owner /CM has the right to reject a Project Manager or Superintendent if they do not specifically meet the qualifications.

10.21 REJECTION OR WITHDRAWAL OF PROPOSALS

10.21.1 A bidder on any Prime Contract may withdraw his bid from consideration within forty-eight (48) hours of the bid opening without forfeiture of the certified check, bank cashier's check, surety bid bond or other security filed with the bid if the price bid was submitted in good faith, and the bidder submits credible evidence that the reason for the price bid being substantially lower was a clerical mistake as opposed to a judgment mistake, and was actually due to an unintentional and substantial arithmetical error or an unintentional omission of a substantial quantity of work, labor, material or services made directly in compilation of the bid; provided, 1.) the mistake or error must be proven and submitted to the Owner / CM for review and approval: 2.) notice of a claim of the right to withdraw such bid is made in writing with the contracting body within two business days after the opening of bids; and 3.) the withdrawal of the bid would not result in the awarding of the contract on another bid of the same bidder, his partner, or to a corporation or business venture owned by or in which he has a substantial interest.. No bidder who is permitted to withdraw a bid shall supply any material or labor or perform any subcontract or other work on the project without written approval of the contracting body. No accepted bid may be withdrawn for ninety (90) calendar days after the Bid Opening. Initial determination as to whether there was a clerical mistake or arithmetical error or unintentional omission of substantial quantity of work, labor, material, or services will be within the discretion of the Architect, a representative of the Owner, with the assistance of the Construction Manager, and such decision shall be considered final and determinative.

10.21.2 The Township reserves the right to reject any bid received if the bidder's responses to the Contractor's Qualification Statement (AIA Document A305) fail to satisfy the Township that such bidder is qualified to carry out the obligations of the Contract and to complete work, as specified. By way of specific example, a default in a contract in the last five years will, absent extraordinary justification, disqualify a bidder, as will litigation on a construction contract which, in the past five years, resulted in an award against the interest of the bidder.

10.22 PA PREVAILING WAGE

10.22.1 The Schedule of Minimum Wages as determined by the Department of Labor and Industry, Commonwealth of Pennsylvania, is hereby made a part of this Specification. A copy of these rates is attached in Section 007343 Prevailing Wage Requirements.

10.22.2 Copies of these forms may be obtained from the Prevailing Wage Division. The Project is subject to the Pennsylvania Prevailing Wage Act (Act of 1961, P.L. 987 No. 442) as amended. The pages titled, "Duties of Awarding Agencies Under Pennsylvania Prevailing Wage Act" may be obtained from the Prevailing Wage Division. These duties include requirements of both the awarding agency (Owner), the Contractor(s) and Subcontractors. It is understood that the Owner will comply with its required duties. The Contractor(s) and Subcontractors shall comply with all duties and instructions required of them. All items mentioned as "contract requirements" in the documents are hereby made a part of the contract to the same extent as if included in the Owner-Contractor Agreement.

10.22.3 "Payroll Certification for Public Works Projects". All Contractors and Subcontractors shall complete this form for each week worked on this project. Each Weekly Payroll Certification form shall be Notarized and forwarded to the Construction Manager for inclusion in the Owner's records. Payroll Certification Forms covering work periods included in an application for payment shall be submitted before or with the respective Application For Payment. If the certifications Forms are not submitted with the Application for Payments, the Owner will withhold payment until received.

10.22.4 US Steel Act 132. The Steel Products Procurement Act, 73 P.S. §§1881-1887, and the Trade Practices Act, 71 P.S. §773.101 et seq.

10.22.4.1 If any steel products are to be used or supplied in the performance of the Contract, only steel products produced in the United States shall be used or supplied in the performance of the Contract or any subcontract thereunder. This provision shall not apply in any case where the head of the public agency, in writing, determines that the type of steel products necessary to the performance of the Contract are not produced in the United States in sufficient quantities to meet the requirement of the Contract.

10.22.4.2 Contractors must ensure compliance with all provisions of the above which place restrictions upon the source of certain steel, cast iron and aluminum products allowed to be used in the performance of public agency contracts. The provisions of the above sited statutes are incorporated herein as if the same were set out at length herein.

10.22.4.3 Bidding will be public and utilize Pennsylvania State Prevailing Wage Rates established by the Commonwealth of PA Department of Labor and Industry.

11. INDEMNITY

11.1 The undersigned shall indemnify and hold harmless Exeter Township, Boyle Construction, Inc., Manns Woodward Studios and Herbert, Rowland & Grubic, Inc., all consultants and each officer and employees, with respect to any claims, losses, expenses, costs and reasonable attorney's fees incurred by Exeter Township, Boyle Construction, Inc., Manns Woodward Studios and Herbert, Rowland & Grubic, Inc., all consultants and each officer and employees, with regard to the undersigned's failure to comply with these Bid Documents and procedures.

11.2. Additional Insureds: All shall be named as "Additional Insureds" under all policies of insurances. Coverage shall be primary and non-contributory.

1. Exeter Township - its members, officers, employees and consultants.
2. Boyle Construction, Inc., Manns Woodward Studios, and Herbert, Rowland & Grubic, Inc. - and their members, officers, employees and consultants.
3. The Commonwealth of Pennsylvania.

12. Extra Work – No extra work will be considered unless the Exeter Township authorizes such work, in advance, in writing.

13. Safety and Health Regulations – The Bidder further agrees that should he enter into a Contract with the Exeter Township to perform all or any portion of the work included herein, he will comply with all the provisions of the Department of Labor, Occupational Safety and Health Administration, Safety and Health Regulations for Construction, contained in the Federal Register Volume 37, Number 243, Part II, dated Saturday, December 16, 1972.

14. SPECIFICATION AND PRODUCT DESCRIPTION

14.1 Substitute Material and Equipment – Proposal shall include furnishing and installing material in strict accordance with Contract Documents. No substitutions or deviations will be considered except as provided for in Contract Documents

14.2 Any product substitution requests must be made in writing including all product literature and specification at least ten (10) calendar days prior to the bid due date.

15. This project is financed by Exeter Township.

16. OPENING OF PROPOSALS

16.1 The Owner will, as soon as practical, award the Contracts to the Bidders, and shall have the right to reject any or all Bids, to waive technical defects, and to accept or reject any part of any Bid if in the judgment of the Owner its best interest shall be served by such action; and the Bidder, in submitting a Bid accepts these conditions. No rights shall accrue to any person submitting a Bid or Proposal until such Bid has been accepted, and a contract awarded, and such contract completely executed in writing by both parties.

17. AWARD OF CONTRACT

17.1 The Owner's intent is to enter into Contracts with the lowest responsible and qualified Bidders.

17.2 The Owner reserves the right to reject any and all bids. The Owner reserves the right to waive non-material defects, informalities or technicalities in any Bid in accordance with law. The Owner reserves the right to disregard all nonconforming, non-responsive, unbalanced, or conditional bids. Also, Owner reserves the right to reject the Bid of any Bidder if Owner believes that it would not be in the best interest of the Project to make an award to that Bidder, whether because the Bid is not responsive, or the Bidder is unqualified or of doubtful financial ability or fails to meet any other pertinent standard or criteria established by the Bidding Documents.

17.3 In evaluating Bids, Owner will consider the qualifications of such Bidders (see Article 3), whether or not the Bids comply with the prescribed requirements, and such alternates, unit prices and other data, as may be requested in the Bid Form or prior to the Notice of Award.

17.4 Owner may consider the qualifications and experience of Subcontractors, suppliers, and other persons or organizations proposed for any portions of the Work requested by Owner. Owner also may consider the operating costs, maintenance requirements, performance data, and guarantees of major items of materials and equipment proposed for incorporation in the Work when such data is required to be submitted prior to the Notice of Award.

17.5 Owner may conduct such investigations as Owner deems necessary to assist in the evaluation of any Bid and to establish the responsibility, qualification, and financial ability of Bidders, subcontractors, suppliers, and other persons or organizations to perform and furnish the Work in accordance with the Contract Documents to Owner's satisfaction within the prescribed time.

17.6 If the Contract is to be awarded, Owner will give the Successful Bidder a Notice of Intent to Award within sixty (60) days after the day of Bid opening unless extended as set forth in these Instructions to Bidders.

17.7 The Owner reserves the right to waive non-material defects, informalities, or technicalities in any Bid in accordance with the law.

18. CONTRACT SECURITY & INSURANCE

18.1 The General Conditions set forth the Owner's requirements as to Performance Bonds, Payment Bonds, and insurance requirements.

18.2 The apparent low Bidder must provide Payment and Performance Bonds in the forms included in the Contract Documents and all Certificates of Insurance or other insurance information as required pursuant to the General Conditions of the Contract within ten (10) days of the issuance of Notice of Intent to Award. Other bond forms will not be

accepted. Failure of the apparent low Bidder to provide original executed Payment and Performance Bonds in the required form within the required time will result in forfeiture of the Bid Security.

19. SIGNING OF AGREEMENT

When Owner/Construction Manager issues a Notice of Intent to Award to the Successful Bidder, the Successful Bidder shall within ten (10) days thereafter, deliver to the Owner/Construction Manager, One (1) original copy of the required bonds, insurance certificates, and any other documents that may be requested with the Notice of Intent to Award. Within ten (10) days thereafter, the Construction Manager will send contract agreements via DocuSign to Successful Bidder. The Successful Bidder shall sign the agreements and DocuSign will automatically send the agreements to the Owner for signature. Once signed by the Owner DocuSign will automatically return an executed agreement to all parties.

20. RETAINAGE

Retainage will be in accordance with the Contract Documents. Reference Article 9 of the General Conditions.

21. PREVAILING WAGES

Pennsylvania Prevailing wage rates will apply to this project. The Contractor and its subcontractors shall comply with the provisions, duties, obligations, remedies, and penalties of the Pennsylvania Prevailing Wage Act, 43 P.S. § 165-1 et seq. which is incorporated herein by reference as if fully set forth herein. The general prevailing minimum wage rates, as determined by the Secretary of Labor and Industry shall be paid for each craft or classification of all workmen needed to perform work on the Project during the term hereof for the locality in which the work is to be performed.

22. COMPETENT WORKMEN

No person shall be employed to perform any work under the Contract if they are not legally eligible to be employed under applicable state and federal law or if they are not a trained, competent workman, or mechanic, as applicable. For purposes of this Section, no workman or mechanic, as applicable, shall be regarded as competent unless he shall be duly skilled in the applicable branch of labor, and paid the applicable prevailing wage.

22.1 The Commonwealth of Pennsylvania enacted Act 127 of 2012, known as the Public Works Employment Verification Act ('the Act') which requires all public work contractors and subcontractors to utilize the Federal Government's E-Verify system to ensure that all employees performing work on public work projects are authorized to work in the United States. The Contractor and its Subcontractor (as such term is defined in the Act) are required to comply with the Act and the Statement of Policy as published in the Pennsylvania Bulletin,

December 29, 2012, and effective January 1, 2013.

23. EROSION CONTROL

The Successful Bidders shall comply with all rules and regulations of Chapter 102, Title 25 of Pennsylvania Code, relating to Soil Erosion and Sedimentation Control.

24. PUBLIC WORKS CONSTRUCTION CONTRACTS

In consideration of the funds awarded and activities funded under the Contract which involves construction, reconstruction, alteration, repair, improvement, or maintenance of a building, structure, or improvement ("The Work"), the Successful Bidder agrees to perform in accordance with the following:

24.1 Steel Products Procurement Act.

24.2 Trade Practices Act.

24.3 Public Works Contractor's Bond Law of 1967. Prior to the award of any Contract for any Work on the Project, the contractor to whom the contract is to be awarded must furnish the following bonds which shall become binding upon the award of such Contract:

24.3.1 A performance bond at 100 percent of the Contract Sum, conditioned upon the faithful performance of the Contract in accordance with the plans, specifications, and conditions of the Contract. Such bond shall solely for the protection of the Owner which awarded said contract.

24.3.2 A payment bond at 100 percent of the Contract Sum. Such bond shall be solely for the protection of claimants supplying labor or materials to the Successful Bidder, its contractor(s) or to any of its Subcontractors, in the prosecution of the work provided for in such Contract and shall be conditioned for the prompt payment of all such material furnished or labor supplied or performed in the prosecution of the Work. "Labor or materials" shall include public utility services and reasonable rentals of equipment, but only for periods when the equipment rented is actually used at the site.

24.3.3 Reference Article 11.1.2 of the General Conditions for additional requirements.

25. SEVERABILITY

25.1 Should any section or any part of any section of the Contract be rendered void, invalid, or unenforceable by any court of law, for any reason, such a determination shall not render void, invalid, or unenforceable any other section or part of any section of the Contract.

26. AMERICANS WITH DISABILITIES ACT

During the term of this Contract, the Successful Bidder agrees as follows:

26.1 Pursuant to federal regulations promulgated under the authority of The Americans with Disabilities Act, 28 C.F.R. § 35.101 et. Seq., the Successful Bidder understands and agrees that no individual with a disability shall, on the basis of the disability, be excluded from participation in this Contract or from activities provided for under this Contract. As a condition of accepting and executing the Contract, the Successful Bidder agrees to comply with the General Prohibitions Against Discrimination, 28 C.F.R. § 35.130, and all other regulations promulgated under Title II of The Americans with Disabilities Act which are applicable to all benefits, services, programs, and activities provided by the Commonwealth of Pennsylvania through contracts.

27. HEALTH AND SAFETY

27.1 Reference Article 10 of the General Conditions.

28. BONDS & INSURANCE

28.1 The Bidder will be required to furnish a Bid Bond, Performance Bond, and Labor and Material Payment Bonds in the amount of one hundred percent (100%) of the Contract Price in the form provided in the Contract Documents. Said Sureties shall be listed on the current Federal Register and have an AM Best rating of 'A-' or better and a financial rating of Class X or higher.

28.2 Insurance companies must be rated 'A-' or better in A.M. Best.

28.3 Bidder shall include the cost of the Bonds & Insurance in their Bid.

28.4 Bidder shall provide the insurance required in the General Conditions.

29. PRE-BID CONFERENCE

29.1 The Mandatory Pre-bid Conference will be held on the date and time listed in the Advertisement for Bids. Representatives of Owner, Construction Manager (CM), Architect and Civil Engineer will be present to discuss the Project. CM will transmit to all prospective Bidders of record such Addenda, as CM considers necessary in response to questions arising at the Conference. Non-attendees will not be permitted to bid.

30. PROJECT FINANCING

The Work to be done under the Contract is public work and may be financed in whole or part by the Owner (a public body) by issuance of bonds, which are subject to various qualifications and restrictions. The Owner, in such case and in good faith, intends to consummate such financing, but its ability to do so is subject to many factors beyond its control. It is therefore expressly understood and agreed to by each Bidder that, notwithstanding any other provision of the Contract Documents, the Owner may at any time cancel any award made by it, or cancel any contract entered into with any Bidder, without liability to the Bidder, at any time before the Bidder has been given written notice to proceed and has actually begun Work under the Contract if financing satisfactory to the Owner cannot reasonably be consummated as contemplated, or if any court of competent jurisdiction shall enjoin or otherwise prohibit the Owner from proceeding with the Work.

30.1 The Work to be done under the Contract is funded in part by a Redevelopment Assistance Capital Program (RACP) Grant from the Commonwealth of Pennsylvania, Office of the Budget. Bidders are notified that Projects funded by state funds are subject to various qualifications, restrictions, and special requirements.

31. FAILURE TO EXECUTE CONTRACT

Failure of the Successful Bidder to whom Notice of Intent to Award has been given to deliver appropriate Payment and Performance Bonds, Certificates of Insurance, or execute the Contract within the time specified, shall constitute a default by such Bidder and the Owner may, at its sole discretion, award the contract to the next lowest responsive and responsible Bidder or re-advertise for Bids, and the defaulting Bidder shall pay to the Owner the difference between the amounts of his Bid and any higher amount for which the Owner may contract for the required work, plus any advertising, consulting, legal or other expenses incurred by reason of the default. The Bid Security of such defaulting Bidder shall be applied on account of said damages, and if the amount of said damages exceeds the amount of the Bid Security, the defaulting Bidder shall pay to the Owner the full amount of the excess.

END OF SECTION 00 1100

SECTION 00 1310 – PROPOSAL CHECKLIST

The following represents a list of those Documents and materials, which will be required in connection with the Project. Certain items will be required at time of the Bid submission; failure to submit them may result in disqualification of the Bid in accordance with Pennsylvania law; other items will be required after bid date but no later than time set for the Contract execution. Specific review should be made of Bidding Documents contained in the Project Manual to ascertain what those Documents are and when they are required to be submitted.

Submissions required with the Bid:

[ ] Bid Form fully executed and notarized.

[ ] Bid Bond or Certified Check or Cashier's Check in the amount of 10% of the Bid total and shall include Consent of Surety and Power of Attorney, Signed and Sealed.

[ ] Non-Collusion Affidavit, Signed and Sealed.

[ ] Non-Discrimination Clause, Signed and Sealed.

[ ] PA Public Works Employment Verification Form (E-Verify).

[ ] Letter of Insurer

This checklist is submitted to the Bidders strictly as a courtesy and is not to be binding on the Owner. Responsibility for ascertaining and submitting the Documents needed for consideration of the Bid, and at appropriate time, falls upon each and every Bidder.

Submissions required after requested by the Construction Manager (within 48 hours of bid submission):

[ ] Bidder's Qualifications, AIA A305, completed.

[ ] A Schedule of Values.

[ ] List of Subcontractors.

[ ] Safety Questionnaire.

Submissions required after Letter of Intent issued:

[ ] Certificate of Insurance.

[ ] Performance and Payment Bond (100%).

[ ] No Lien Agreement.

END OF SECTION 00 1310

Contractor Pre-Qualification Safety Questionnaire

Job#: _____

Date: _____

Contractor Name: _____

Information required in this document will be provided to the above-named client. Client will Review and make all determinations regarding acceptability based on initial and any follow up Information requested.

Company Information

Address _____ Phone Number _____

City _____ Fax Number _____

State _____ Zip Code _____ e-mail _____

SIC Code _____ Yrs. In Business _____

Corp. Safety Director _____

Phone Number _____

E-mail _____

Company Background (Explain the type of work your company performs)

Section A: Experience Modification Rate

Please obtain from your insurance agent/broker/carrier, Company's EMR for the last four (4) rating periods. Contractor may be considered ineligible if current year or most recent three-year average EMR is above the identified threshold:

Experience Modification Rate Threshold (EMR)	1.0		
Current Year EMR		Policy Year	
Previous Year 1		Policy Year	
Previous Year 2		Policy Year	
Previous Year 3		Policy Year	

If Contractor's current EMR, or average EMR over the most recent three (3) year period is above the identified threshold, the following information must be provided:

1. Written explanation of why contractor's EMR is above identified threshold;
2. Written outline of corrective actions currently being undertaken to reduce injuries, illnesses and Worker's Compensation losses by the contractor;
3. Copy of Contractor's Corporate Safety and Health Program
4. Name and qualification of individual(s) responsible for managing and overseeing this initiative;
5. Copy of Contractor's Worker's Compensation Loss Runs for the past 3 years.

Determinations made are based on the above information provided, as long as contractor has satisfied the requirements of Section A, even if its current or three-year average EMR is above the identified threshold.

Section B: OSHA Incident Rates

Evaluation of the Contractor's OSHA Recordable and Loss Time Incidence Rate compared to the most current data provided by the Annual Survey of Occupational Injuries and Illness conducted by the Bureau of Labor Statistics, U.S. Department of Labor (BLS). The Contractors must recent three-year (3) period will be evaluated.

Contractor may be considered ineligible if Total Recordable or Loss Time Incidence Rate average for the most recent three-year (3) period exceeds the applicable statistical standards for its business category.

Please provide your North American Industry Classification System (NAICS) Code _____

Contractor's company-wide OSHA Recordable Incidence Rate for past 3 years:

Year _____ # of Cases _____ Total Co. Hrs. Worked _____ T.R.I.R _____

Year _____ # of Cases _____ Total Co. Hrs. Worked _____ T.R.I.R _____

Year _____ # of Cases _____ Total Co. Hrs. Worked _____ T.R.I.R _____

Contractor's Company-wide OSHA Loss Time Incidence Rate for past 3 years:

Year _____ # of Cases _____ Total Co. Hrs. Worked _____ L.T.I.R _____

Year _____ # of Cases _____ Total Co. Hrs. Worked _____ L.T.I.R _____

Year _____ # of Cases _____ Total Co. Hrs. Worked _____ L.T.I.R _____

Information to assist in completing Section B, #2 and #3:

OSHA Recordable Incidence Rate = $\frac{\textit{Total \# of Recordable Cases x 200,000}}{\textit{Divided by Company Man Hours}}$

OSHA Loss Time Incidence Rate = $\frac{\textit{Total \# of Loss Time Cases x 200,000}}{\textit{Divided by Company Man Hours}}$

If Contractor's average total recordable or loss time incident rate compared to the most recent three-year (3) period exceeds the applicable statistical standards for its business category, the contractor must submit the following:

1. Written explanation why Contractor's Incidence Rate exceeds the BLS Incidence Rate;
2. Written outline of corrective actions currently being undertaken to reduce employee injuries and illnesses;
3. Copy of Contractor's Corporate Safety and Health Program;
4. Copy of Contractor's OSHA 300 log for each of the past three (3) years.

Determinations made are based on the above information provided, if the Contractor has satisfied the requirements of Section B even though it has an Incidence Rate that exceeds the BLS Incidence Rate.

Section C: OSHA History

Contractor's OSHA inspection history with respect to Serious, Repeat and Willful citations during the past five (5) year period will be evaluated.

Has Contractor received any Serious, Repeat or Willful Citations within the past five years, beginning immediately prior to the submittal of this questionnaire? This includes contested citations that have not yet been resolved.

☐ YES ☐ NO

If yes, list total number of citations by type and per year in the chart below. Submit copies of all citations and explanation of abatement actions taken to the client.

Year		Serious		Repeat		Willful		Fatality		Total	
Year		Serious		Repeat		Willful		Fatality		Total	
Year		Serious		Repeat		Willful		Fatality		Total	
Year		Serious		Repeat		Willful		Fatality		Total	
Year		Serious		Repeat		Willful		Fatality		Total	

If Contactor answered NO to having received any citations classified as Serious, Repeat, or Willful and such violations are found during the verification process, the Contractor may be considered ineligible by the client.

Section D: Safety Culture

Contractor must answer **ALL** questions in section below with either a YES or NO response. Each YES answer is worth "5" points and each NO answer is worth "0" points. Maximum possible score is 100. (For example, 20 questions with 20 answered YES equals 100; 15 answered YES equals 75.)

Minimum Required Score 80

Safety Policy and Procedure Questions:

1. Does Contractor have a written corporate safety and health program? ☐ YES ☐ NO
2. Does Contractor develop a project specific safety and health plan for each project? ☐ YES ☐ NO
3. Does Contractor clearly outline Names, Roles and Responsibility regarding safety for all management personnel assigned to a project? ☐ YES ☐ NO
4. Does Contractor implement and enforce a Substance Abuse Testing Program? ☐ YES ☐ NO

Safety Policy and Procedure Questions Cont.

5. Does Contractor perform pre-construction safety planning prior to the start of the project as well as major operations (i.e. foundation, steel erection, façade, excavation) addressing scope of work, exposures associated with work, controls necessary to eliminate or mitigate exposure? ☐ YES ☐ NO

6. Does Contractor complete Job Hazard Analysis (JHA) prior to the start of a new task identify And reviewed with crews performing the task? ☐ YES ☐ NO

7. Does Contractor assign an onsite safety representative to the project who has the authority and has been allocated sufficient time to audit and enforce safety compliance? ☐ YES ☐ NO

8. Does the Contractor implement and enforce a Fall Management program at heights in excess of six (6) feet for all trades? ☐ YES ☐ NO

9. Does Contractor conduct and document employee orientation for all workers assigned to the project? ☐ YES ☐ NO

10. Does Contractor implement an employee disciplinary action program regarding failure to comply with safety requirements and procedures? ☐ YES ☐ NO

11. Does Contractor hold its project management personnel accountable for safety performance of the project they are assigned to? ☐ YES ☐ NO

12. Does Contractor conduct ongoing job site safety audits with corrective action taken for deficiency? ☐ YES ☐ NO

13. Accident investigation performed to determine cause and corrective action to prevent reoccurrence? ☐ YES ☐ NO

14. Does Contactor provide ongoing safety training to its office and field management personnel? ☐ YES ☐ NO

15. Does Contractor provide ongoing safety training to its field labor forces? ☐ YES ☐ NO

16. Does Contractor hold and document weekly or more frequent safety meetings onsite? ☐ YES ☐ NO

17. Does Contractor hold subcontractors accountable for adhering to safety requirements and procedures set forth on the project? ☐ YES ☐ NO

18. Does Contractor employ full-time Safety Director? ☐ YES ☐ NO

19. Does Contractor identify by name and qualification competent persons assigned to project? ☐ YES ☐ NO

20. Does Contractor develop a project specific emergency response plan that is reviewed with All workers? ☐ YES ☐ NO

Contractor Score

Completed by

Name _____

Signature _____

Title _____

Date _____

SECTION 01 1200 - MULTIPLE CONTRACT SUMMARY

PART 1 GENERAL

1.1 RELATED DOCUMENTS

A. Drawings and general provisions of the Contract, including General Conditions and other Division 01 Specification Sections, apply to this Section.

1.2 SUMMARY

A. This Section includes a summary of each contract, including responsibilities for coordination.

B. Specific requirements of each contract are also indicated in individual Specification Sections and on Drawings.

C. Related Sections include the following:
1. Division 01 Section 011000 "Summary" for the Work covered by Contract Documents and for work sequence.
2. Division 01 Section 013100 "Project Management and Coordination" for general coordination requirements.
3. Division 01 Section 015000 "Temporary Facilities and Controls" for specific requirements for temporary facilities and controls.
4. Division 01 Section 019113 “General Commissioning Requirements” for additional information and procedures.

D. Definitions:
1. Permanent Enclosure: As determined by Architect and/or Construction Manager, permanent or temporary roofing is complete, insulated, and weather tight; exterior walls are insulated and weather tight; and all openings are closed with permanent construction or substantial (watertight and insulated) temporary closures.
2. Coordinate: The term “coordinate” means “to cooperate with related trades to furnish and install all connections between the trades in correct sequence size and location to create a complete system ready for intended use.”
3. Verify: The term “verify” means “to measure, investigate, review, test, check the accuracy or correctness of and prove by demonstration, evidence, or testimony the location, size, dimension and condition of an item.”
4. Furnish: The term “furnish” is used to mean “supply and deliver to the project site, ready for unloading, unpacking, assembly, installation and similar operations.”
5. Install: The term “install” is used to describe operations at the project site including the actual “unloading, unpacking, assembly, erection, placing, anchoring, applying, working to dimension, finishing, curing, performing, coordinating with other trades, protecting, cleaning, and similar activities.”
6. Provide: The term “provide” means “to furnish and install, complete and ready for the intended use.”

1.3 COORDINATION

A. Project Coordinator shall be responsible for coordination between the General Construction Contract, Site Work Contract, Plumbing Contract, Fire Protection Contract, HVAC (also referenced as Mechanical) Contract, and Electrical Contract.
   1. General Construction Contractor shall act as and assume responsibilities of Project Coordinator or Lead Contractor which are designated throughout the Contract Documents. The General Contractor shall be the full-time Project Coordinator and shall be experienced in Administration and Supervision of building construction activities, including Site Work, Mechanical, Electrical, Plumbing, and Fire Protection work.

B. Site, HVAC, Plumbing, Fire Protection, & Electrical Coordinators are responsible for coordinating with the Project Coordinator.

C. The HVAC Contractor shall be responsible for the assembly of coordination drawings for himself, and the inclusion of coordination drawings provided by the Electrical, Plumbing, and Fire Protection Contractors.

D. The HVAC (Mechanical) Contractor shall be the primary M/E/P/FP coordinator and shall be responsible for the preparation of 2D CAD electronic coordination drawings between HVAC, Plumbing, Fire Protection and Electrical trades. 2D CAD files are required to be provided by all contractors with final coordination drawings provided from HVAC Contractor. 3D CAD files and coordination drawings are preferred. The Plumbing, Fire Protection, and Electrical Contractors shall provide such information electronically to fully coordinate their work with that of the other primes and in the format requested by the HVAC Contractor. All Prime Contractors shall cooperate and be responsible for preparation and compliance with coordination drawings.

E. GC shall coordinate all work in accordance with project phasing requirements and scheduled activities of all other contractors.

1.4 PROJECT COORDINATOR RESPONSIBILITIES

A. Project Coordinator: Full-time Project Coordinator shall be experienced in administration and supervision of building construction, including HVAC, plumbing, fire protection, and electrical work.
   1. Coordination activities of Project Coordinator include, but are not limited to, the following:
      a. Provide typical overall coordination of the Work.
      b. Provide overall coordination for project.
      c. Coordinate shared access to workspaces.
      d. Coordinate product selections for compatibility.
      e. Provide overall coordination of temporary facilities and controls.
      f. Coordinate, schedule, and approve interruptions of permanent and temporary utilities, including those necessary to make connections for temporary services.
      g. Coordinate construction and operations of the Work with work performed by each Contract and Owners subcontractors.
      h. Prepare Coordination Drawings to coordinate work by more than one contract except for HVAC, electrical, plumbing, and fire protection coordination drawings which are the responsibility of the respective Contractors and primarily the HVAC Contractor.
      i. Coordinate sequencing and scheduling of the Work. Include the following:
         1) Initial Coordination Meeting: At earliest possible date, arrange and conduct a meeting with contractors for sequencing and coordinating the Work; negotiate reasonable adjustments to schedules.

2) Prepare a combined Contractor's Construction Schedule and monthly updates for entire Project. Base schedule on Preliminary Construction Schedule. Secure time commitments for performing critical construction activities from contractors. Show activities of each contract on a separate sheet. Prepare a summary sheet indicating combined construction activities of contracts.
3) Submit schedules to Construction Manager for approval.
4) Prepare recovery schedules as needed.
5) Construction Manager will distribute copies of approved schedules to Architect, Owner, and Contractors.

j. Provide photographic and video documentation of existing conditions, work as it progresses and at completion.
k. Provide quality-assurance and quality-control services specified in Section 014000 "Quality Requirements."
l. Coordinate sequence of activities to accommodate tests and inspections, and coordinate schedule of tests and inspections.
m. Provide information necessary to adjust, move, or relocate existing utility structures affected by construction.
n. Perform field engineering, construction layout, and locate existing permanent benchmarks and control points. Provide similar reference points and establish permanent benchmarks, control points, and elevations on project site for use by other prime contractors and all trades.
o. Provide field surveys of in-progress construction and site work.
p. Coordinate progress cleaning of areas or pieces of equipment where more than one contractor has worked. Progress cleaning of building and site shall be performed on a daily basis.
q. Coordinate final cleaning of building with all Contractors.
r. Coordinate cutting and patching.
s. Coordinate protection of the Work.
t. Coordinate completion of interrelated punch list items.
u. Construction Manager will coordinate preparation Record Documents if information from more than one contractor is to be integrated with information from other contractors to form one combined record.
v. Print and submit Record Documents if installations by more than one contractor are indicated on the same Contract Drawing or Shop Drawing.
w. Construction Manager will collect Record Specification Sections from other contractors, collate Sections into numeric order, and submit complete set.
x. Construction Manager will coordinate preparation of operation and maintenance manuals if information from more than one contractor is to be integrated with information from other contractors to form one combined record.
y. Before building foundations are placed, create a rough-in drawing indicating locations through-foundation-wall penetrations (horizontal and vertical dimensions). Coordinate with all other Prime Contractors and submit drawing to the Construction Manager for confirmation of all penetrations with Design Professionals.
z. Before the concrete floor slab is poured, create a rough-in drawing indicating location of under slab and in-wall conduits and utilities related to Work by Owner’s Vendors. Intent: Vendors’ Work requires coordination with Prime Contractors’ Work.
aa. Coordinate work of all Owner vendors.

B. HVAC, Electrical, Plumbing and Fire Protection (MEP&FP) Coordinators: Full-time HVAC, Electrical, Plumbing, and Fire Protection Coordinators shall be experienced in coordination of M/E/P/FP construction, including coordination of type of operations required for this Project.
   1. Coordination activities of HVAC, Electrical, Plumbing and Fire Protection Coordinators include, but are not limited to, the following:
      a. Schedule and sequence of activities.
      b. Coordinate sharing access to workspaces.
      c. Coordinate integration of work into limited spaces.
      d. Coordinate protection of completed work.
      e. Coordinate cutting and patching work.
      f. Take the lead and be responsible Coordination Drawings. Coordination drawings must be reviewed with Project Coordinator for finish ceiling heights. Drawings shall coordinate and include but not be limited to the following components:
         1) Structural System limits.
         2) Electrical Systems.
         3) Fire Protection Systems.
         4) Mechanical piping and ductwork.
         5) Storm and sanitary piping.
         6) Data and telecommunications.
      g. Coordinate tests and inspections.
      h. Coordinate temporary services and facilities.
      i. Coordinate with all utility companies with bringing all utilities into the site (i.e. electric, cable, water, sewer, etc.). Further Coordinate with Project Coordinator, Construction Manager, and Site Contractor for all Utility Company work.

1.5 GENERAL PARAMETERS FOR HVAC, ELECTRICAL, PLUMBING AND FIRE PROTECTION COORDINATION DRAWINGS

A. HVAC Contractor is responsible for integrating Coordination Drawings.

B. Coordination drawings must be prepared electronically and in CAD format. 2D drawings are required and 3D drawings are preferred for project model integration.

C. Comply with the requirements for Coordination Drawings as specified in the Division 01 Section “Project Management and Coordination.”

D. HVAC Contractor shall within 20 days of a fully executed contract, distribute layout drawings in CAD format to all Contractors. Layout drawings shall include but not be limited to the following:
   1. Columns and beams.
   2. Ceiling heights.
   3. Ceiling dimensional layouts per the reflected ceiling plans.
   4. Ceiling grid.
   5. Coordination drawings of ceiling cavities and mechanical rooms demonstrating the spatial relationships and necessary clearances within the available space above ceilings and within rooms for HVAC, Electrical, Plumbing and Fire Protection structural systems.
   6. Wall to wall dimensions.
   7. Partition layouts.
   8. Windows, doors and other openings.
   9. Heights from ceiling to structural components.

10. Dimensions from column centerlines.
11. Other appropriate building features.

E. Upon receipt of layout CAD files, each contractor shall proceed immediately and independently to indicate their work as overlays on the CAD files. This work shall be done within the next 5 days unless otherwise agreed upon by the Construction Manager.

F. The drawing layout prepared by each contractor shall be transmitted to HVAC contractor and other contractors for comment and adjustments.

G. Coordination meetings will be held, and all contractors will be required to attend and cooperate. Changes shall be made as requested by HVAC contractor. This process shall take up to 30 days.

H. Contractors shall also prepare additional CAD drawings as necessary to adequately and completely show the intended routing and layout of their work. Additional drawings may include riser diagrams, flow sheets, elevations, details, sections, isometric layouts, etc. as determined by the HVAC contractor and the Architect.

I. The Prime Contractor responsible for Work in each of the following categories shall prepare or arrange for preparation of Coordination Drawings for the following systems:
1. HVAC systems
2. Plumbing systems
3. Fire protection systems including sprinklers
4. Electrical systems
5. Openings and sleeves in structural slabs
6. Ceiling systems

J. Include on Coordination Drawings the information listed below for each of the following categories of Work:
1. Mechanical Systems:
    a. Sizes and bottom/headroom elevations of new unit heaters.
    b. Weights of each unit and the proposed attachment structure.
    c. Locations of major components, including ductwork, piping, dampers, valves, diffusers, cleanouts, and electrical distribution equipment.
    d. Curb locations of penetrations through roofing assemblies.
2. Electrical Systems:
    a. Horizontal and vertical runs of conduit 1-1/4-inch diameter and larger.
    b. Light fixture locations and mounting type including bottom of fixture AFF.
    c. Smoke and Carbon Monoxide detector locations.
    d. Panel boards, switch boards, switch gear, transformers, busways, generator, and motor control center.
    e. Exit signs, strobe/horn, emergency battery pack locations, Fire Alarm Panels, and Generator annunciator panels.
    f. Pull box dimensioned from column centerlines.
3. Fire Protection Systems:
    a. Sizes and centerline elevations of sprinkler piping.
    b. Sprinkler head locations with elevations referenced to ceiling heights.
    c. Fire Pump Room Layout and Riser Diagram.
    d. Locations of major valves.
4. Structural Work:

a. Openings and sleeve locations required in slabs, walls, beams, and other structural elements, including required openings not indicated on Contract Documents.
b. Slab edge locations.

5. Elevated floor and roof Structure, Reflected Ceiling:
   a. Locations and attachment methods of mechanical, fire protection and electrical items, including grilles, registers, diffusers, light fixtures, smoke detectors, sprinkler heads, exit signs, speakers, and other items.
   b. Conform to locations indicated on Contract Drawings to the minimum extent possible.
   c. Indicate positions relative to acoustical ceiling grid where applicable.

K. HVAC Contractor shall assemble all information for final preparation and submission of integrated coordination drawings. This shall be done within 60 days of a fully executed contract for all areas of the building unless otherwise approved by Owner.

L. All communication related to coordination drawings must include the Construction Manager and Project Coordinator on said communication. This includes but is not limited to emails, document distribution in any format, and coordination meetings.

M. Any Contractor not complying with any of the coordination requirements including the timelines will be assessed $1,000.00 for each day that Contractor is not in compliance.

1.6 GENERAL REQUIREMENTS OF CONTRACTS

A. Extent of Contract: Unless the Contract Documents contain a more specific description of the Work, names, and terminology on Drawings and in Specification Sections determine which contract includes a specific element of Project.

1. Unless otherwise indicated, the Work described in this Section for each contract shall be complete systems and assemblies, including products, components, accessories, and installation required by the Contract Documents.
2. Local custom and trade-union jurisdictional settlements do not control the scope of the Work of each contract. When a potential jurisdictional dispute or similar interruption of work is first identified or threatened, affected contractors shall negotiate a reasonable settlement to avoid or minimize interruption and delays.
3. Trenches are not to be left open unless they are enclosed by fencing or barriers.
4. Blocking, backing panels, sleeves, and metal fabrication supports for the work of each contract shall be the work of each contract for its own work.
5. Furnishing of access panels for the work of each contract shall be the work of each contract for its own work. Installation and finishing of access panels shall be the work of the General Contractor.
6. Work involving a structural element shall be completed by the General Contractor.
7. Roof Mounted Equipment Curbs for the work of Each Contract shall be the work of each contract. GC is responsible for all roof curb blocking. Flashing of Roof Mounted Curbs is by General Contractor.
8. Painting for the work of each contract shall be the work of the General Contractor.
9. Cutting and Patching – Provided under each contract for its own work. Exterior Patching of Penetrations through exterior assemblies shall be by General Contractor. Patching in finished surfaces to be the work of the General Contractor.
10. Through-penetration fire-stopping and thermal insulation for the work of each contract shall be provided by each Contractor.

11. Dust and Smoke Control: Each contract shall be responsible for controlling dust and smoke production and distribution in occupied areas of the building that require work. Do not do work that produces dust, smoke or other airborne particulates without adequate control facilities. Protections include but are not limited to:
    a. HEPA vacuums to collect dust.
    b. Temporary dust enclosure.
    c. Negatively pressurize the space and exhaust to a location not disruptive to the Owner.
    d. Employ water spray for concrete saws.
    e. When using gasoline powered equipment inside an occupied building, this shall be limited to times when the building is not occupied. Alternatively use electric or compressed air powered equipment.
    f. Comply with all current OSHA requirements for smoke and dust control.
12. Protection of Ceilings: Each contract shall be responsible for removing, carefully storing, and reinstall ceilings in rooms with above ceiling work where new ceiling tiles have already been installed. Where ceilings are damaged, the cost of replacement or repairs will be divided equally between prime contractors with above ceiling work in that room.
    a. Where a Prime Contractor requires extended access above a newly installed ceiling, that Contractor shall coordinate with the GC to not install the permanent ceiling panels, and that contractor shall provide and install temporary ceiling panels in place of the permanent ceiling panels. Temporary ceiling panels can be salvaged from demolition work (if applicable), or reused from some other source, or may be the lowest cost panel available to that Contractor. When access is no longer required, that Contractor shall remove the temporary panels and coordinate the permanent installation of ceiling tiles with the GC.
13. Concealed sealants for the Work of each contract shall be provided by each contract for its own Work. Comply with Division 07 requirements for sealants.
14. Contractors' Startup Construction Schedule – Within ten (10) working days after initial Preconstruction Meeting horizontal bar-chart-type construction schedule submittal has been received from Project coordinator, submit a matching startup horizontal bar-chart schedule showing construction operations sequenced and coordinated with overall construction.
15. Permits and Inspections: The plans will be submitted to Exeter Township for a plan review by the Architect. Upon award, each successful prime contractor must complete any applicable permit forms (and business licenses if required) and submit to the Exeter Township and obtain the approved plans. Building permit and inspection fees will be paid for by the Owner. Any additional costs incurred due to failed inspections shall be paid by the prime contractor. Any required contractor or business license fees required by the municipality are to be paid for by each prime contractor.
16. See the “Construction Milestone Schedule” for mandatory, contractual, completion dates through the duration of the project. Schedule must be held. There will be no exceptions.
17. Each prime contractor is responsible for importing any and all material required for their work including cost of the material, hauling placement and compaction.
18. All utility company tap-in or new service fees such as electric; natural gas; sanitary sewer and water service are to be paid for by the Owner.
19. Construction testing shall be provided by the Owner.
20. HVAC Testing, adjusting and Balancing and Commissioning Verification shall be provided by the Owner. Each Contractor is responsible for the startup, initial balancing, and commissioning of their equipment and systems.
21. Each prime contractor is responsible for offsite storage of their own materials. Onsite storage may only be permitted as space allows. Construction Manager will approve storage locations. Construction Manager reserves the right to deny use of storage.

22. Each prime contractor shall be responsible for their own daily clean-up.
23. Each prime contractor shall remove all packaging or protective film on all of their finishes just prior to final cleaning.
24. Each prime contractor is responsible for their own as-built drawings to include final CAD file as-built drawings.
25. Each and all primes are responsible for all drawings for coordination and layout purposes.
26. Contractor shall be required to conduct his activities in a safe manner and shall be responsible for observing the safety requirements of OSHA and local life safety agencies.
    a. Comply with all applicable laws, ordinances, rules, regulations, and orders of the governing authorities having jurisdiction for safety of persons and property to protect them from damage, injury and/or loss.
    b. Erect and maintain as required by conditions and progress of the work, all necessary safeguards for safety and protection, including fences, railings, barricades, lighting, posting of danger signs and other warnings against hazards.
    c. Be solely responsible for initiating maintaining and supervising all safety precautions and programs in connection with the project.
    d. Where noxious or nuisance fumes and odors occur due to construction processes, the contractor shall take every precaution to inform occupants of adjacent buildings and shall take every precaution to prevent the fumes or odors from penetrating the adjacent building. Precautions may include but are not limited to sealing vents and louvers and providing fans to direct odors away from the occupied areas. Contractor shall coordinate with the Construction Manager and Owner minimum of 72 hours prior to beginning such processes.
27. Non-compliance by any Prime Contractor with the agreed upon schedule that results in delays of the project schedule and results in additional time expenditure and/or additional Work for any other Prime Contractor shall result in a Change Order to the offending Prime Contractor. It shall be the responsibility of the affected Prime Contractors to provide proof of delay resulting in additional time and Work as back-up upon issuance of a Change Order Request for the delay caused by another Prime Contractor. The Change Order Requests accompanied by acceptable back-up from the affected Prime Contractors shall be the basis to establish the Change Order issued to the offending Prime Contractor. The Construction Manager will review all information regarding schedule delays and determine fault and accuracy of all claims made.

B. Substitutions: Each contractor shall cooperate with other contractors involved to coordinate approved substitutions with remainder of the Work.
    1. The General Construction Contract shall coordinate applicable substitutions by other contractors.

C. Each Prime Contractor responsible for installation of the systems and equipment is responsible for commissioning each system. The minimum commissioning requirements in accordance with Division 01 and other specific project requirements, including coordination and verification, shall be the responsibility of the Contractor.

D. Each Prime Contractor is responsible for coordinating, installing, maintaining, and removing all Temporary Facilities & Controls as outlined in Division 01 Section 015000 "Temporary Facilities and Controls".

1.7 MULTIPLE PRIME COORDINATION CLARIFICATIONS

A. General Contractor shall furnish and install all lintels and structural supports required for openings and recesses to allow the passage of the Work of his Contract and the Work of the Plumbing, Fire Protection, HVAC, and Electrical Prime Contracts.

B. To the extent that the work of all of the contracts represents a complete and integrated whole, each Prime Contractor shall become thoroughly familiar with all of the construction documents. Work of a particular contract shall be substantially located on the documents referenced below, but such references do not relieve each Contractor for responsibility to provide work in compliance with requirements on all of the documents as follows:
   1. Information contained on any construction document shall be enforceable on each Contractor as indicated on drawings and specifications, by reference to contractor designations (SC, GC, MC, PC, FPC, and EC).
   2. Dimensional information on the Architectural, MEP/FP and Site drawings that relates to the work of a particular contract shall be the responsibility of that Contractor to install the item where located. In the absence of specific dimensional information on the Architectural, MEP/FP and Site plans for exposed items provided by the HVAC, Plumbing, Fire Protection and Electrical Contracts, consult Architect, Engineer, or Construction Manager for decisional requirements before installing exposed item.
   3. In case of conflicts, assignment of responsibilities shall be at the sole interpretation of the Architect, Engineer, or Construction Manager.

C. General Contractor shall provide chases and openings 12” x 12” or larger for equipment in new and existing construction, including all roof areas, as directed, supervised, located, marked, and configured within the project structure, by the Plumbing, HVAC, and Electrical Prime Contractors' personnel onsite. These openings shall be sealed by the prime contractor requiring the opening until permanent equipment is in place and flashings are installed by the GC. All sleeves, conduits, and sealing of the same shall be furnished and installed by the prime contractor that requires the access for installation of systems. Roofing Subcontractor to the GC shall perform cutting and patching of roof materials as directed by the other Prime Contractors for the implementation of their work.

D. The Prime Contractors shall be responsible to seal all roof openings. GC and Roofing Subcontractor are responsible up to curb flashings. The HVAC Contractor shall layout all openings and curbs and shall furnish all roof curbs to GC for installation. GC shall provide all blocking and accessories to install curb(s). Roofing subcontractor will provide all permanent roofing and flashing to the curbs. HVAC Contractor is responsible to seal any temporary or permanent openings and install new equipment keeping the opening watertight at all times.

E. During placement of concrete slabs, each Prime Contractor that has rough-in requirements in the slab shall provide on-site personnel while slabs are being poured to direct, supervise, locate, mark, and configure rough-in requirements. Sleeves required for floor, wall, and roof penetrations shall be furnished and installed by the Prime Contractor(s) that require the sleeves. The Prime Contractor using the sleeves is responsible for installing sealant, fire-safing, and/or escutcheons necessary for a finished installation.

F. Prime Contractors who fail to properly coordinate their work in new construction work and whose work requires an opening, or recess, in completed construction shall be responsible to provide that alteration; to furnish and install lintels and structural supports required; and to patch the construction to match the completed unaltered.

G. General Contractor shall apply sealant around wall mounted outside air intake louvers provided and installed by the HVAC Contractor.

H. Site Contractor shall provide sanitary sewer system from a point five feet outside the perimeter of the building, unless noted otherwise. Plumbing Contractor shall provide sanitary system within building, including underground to a point five feet outside the building perimeter, unless noted otherwise, and shall make final connection to sanitary system.

I. General Contractor shall provide building exterior stormwater conveyance including exterior gutters and downspouts, and make final connections to boots. GC to coordinate with SC for downspout and boot locations. SC will install all exterior storm piping up to and including boot locations for downspout connections. Site Contractor shall provide below grade drainage as shown on the Civil drawings.

J. Site Contractor shall provide domestic and fire suppression water supply system into the Water/Sprinkler Room from Meter Pit. Plumbing Contractor shall provide plumbing water supply system within building and underground from riser in the Water/Sprinkler Room. The Fire Protection Contractor shall provide fire suppression system within building from riser in the Water/Sprinkler Room.

K. Interior concrete bases and pads required for plumbing, fire suppression, heating, ventilation, and air conditioning, and electrical equipment shall be provided by the General Contractor and coordinated with the contractor installing the equipment unless noted otherwise.

L. Site Contractor shall provide exterior concrete pads and bases with exception of exterior light bases and transformer vault. Exterior light pole bases and transformer vaults are provided by the Electrical Contractor and installed by the Site Contractor. Site Contractor will install the generator pad and coordinate with Electrical Contractor for all layout.

M. HVAC and Plumbing Contractors shall provide control interlock wiring for their associated system equipment.
   1. The MC, PC, FPC and EC shall be responsible for coordinating watertight conditions for all roof penetrations and openings that are part of their scope with the GC. GC is responsible for maintaining all watertight conditions.
   2. Electrical Contractor shall provide disconnect switches for HVAC and Plumbing system equipment except where such items are factory installed as an integral part of the equipment.
   3. Electrical Contractor shall provide manual motor starters, or magnetic motor starters, for HVAC and Plumbing equipment except where such equipment is provided with factory installed starters as an integral part of the equipment or equipment control panel. Variable frequency drives shall be an integral part of HVAC equipment and HVAC variable speed pumping package.
   4. Electrical Contractor shall provide fuses for disconnects and disconnect/starter switches. HVAC and Plumbing Contractors shall furnish the Electrical Contractor with required motor data to properly size and select fuses and overload protection in accordance with the National Electrical Code requirements. HVAC and Plumbing Contractors shall furnish to the Electrical Contractor the equipment manufacturers' circuit protection data.
   5. Where fireproofing is indicated for the project, each Prime Contractor shall install clips, hangers, supports, sleeves, runners, and other items required prior to installation of fireproofing. Each Prime Contractor shall protect fireproofing material; damages to fireproofing shall be repaired by the General Contractor and charged to the Prime Contractor responsible for the damage; this includes items installed out of sequence.
   6. Plumbing, Fire Protection, HVAC, and Electrical Contractors shall provide miscellaneous steel members for support of hanging systems installed under their contract and shall reinforce joists for non-panel point concentrated loads. When running parallel to joists, hanging systems shall be supported from steel installed perpendicular to joists and spanning a minimum of three (3) joists. All miscellaneous steel required shall be provided by contractor installing the systems under their contract; do not use joists for support. Supporting from metal roof deck and deck systems is prohibited.
   7. HVAC Contractor shall set controls, panelboards, and appurtenances installed in pipelines and ductwork and shall provide control wiring.

8. Electrical Contractor shall provide devices, wiring within casework, and final connections for casework as provided for in the Contract Documents.
9. Plumbing Contractor to provide all fixtures, traps, etc. to provide all installation and final connections of sinks, faucets, and fittings. Coordinate this work with the General Contractor as provided in the contract documents.
10. Fire Protection Contractor to coordinate tie-in of sprinkler system to fire alarm system with Electrical Contractor. Fire Protection Contractor to provide flow and tamper switches for connection to fire alarm system.
11. Plumbing, HVAC, and Electrical Prime Contracts shall furnish any access panels which are required for access to their work. Coordinate opening requirements with the General Contractor for installation by GC.
12. General Contractor to furnish and install all exterior Architectural vents and louvers.
13. The disconnection and/or reconnection of existing equipment shall be by the Plumbing/ HVAC/ Electrical Contractor as applicable.

N. All roofing work will be performed by GC:
1. GC shall coordinate all work in accordance with project scheduled activities of all other contractors. GC shall perform cutting and patching of all roofing materials including concrete and metal deck. Any structural reinforcement required is by the General Contractor.
2. The GC shall be responsible to maintain watertight conditions between the roof and curbs, pipes and conduits for both permanent and temporary flashing. The MC, PC, FPC and EC shall be responsible for providing temporary enclosures that are watertight for all roof penetrations and openings that are part of their scope in order to maintain watertight conditions beyond the roofer's flashings. GC is responsible for installing all required leveling blocking for curbs. HVAC to furnish and install curbs and layout. GC is responsible for curb flashing.
3. Reference Article 1.7.B of this Section for additional requirements.

O. BUILDING PAD - Building pad shall be priced and procured as follows:
1. SC shall provide building pad at Finish Floor minus concrete slab and stone thickness.
2. GC will then sign-off and approve of the Pad.
3. GC will install footings and foundations. GC is responsible for back fill, compaction, and restoration of the pad.
4. MEP primes will then sign-off and approve the slab.
5. MEP trades will install underground rough-ins. MEP trades are responsible for back fill, compaction, and restoration of the pad.
6. GC will then sign-off and approve the slab.
7. The MEP trades are responsible for any concrete required for their trenches, drains, or conduits.
8. Each trade (GC or MEP) is responsible for dewatering for its own construction activities.
9. GC will stone the building pad and prepare, as required, for pours.
10. GC to coordinate the installation of tie-rod or hair pins (if required) with the MEP trades.

1.8 MULTIPLE PRIME COORDINATION FOR ELECTRONIC/ELECTRIC TEMPERATURE CONTROLS, DIVISION 23

A. The HVAC Contractor is defined herein to include the work of the Mechanical Contractor, H.C., M.C., ATC Sub-Contractor, and/or BAS Contractor.

B. The HVAC Contractor shall provide wiring, fiber, and data cable between all Ethernet Network Controllers Standalone Digital Control Units, workstations, software, sensors, transducers, relays, valves, dampers, damper operators, control panels, and other accessory equipment, along with a complete system of electrical interlocking wiring to fill the intent of the specification and provide for a complete and operable system as specified in Division 23.

C. The Electrical Contractor shall provide electric power wiring to new plumbing and HVAC equipment. HVAC Contractor shall provide electric power wiring and control wiring for ATC equipment and devices.

D. The Electrical Contractor shall furnish duct smoke detectors. The Mechanical Contractor shall install duct detector in ducts. The Electrical Contractor shall wire the duct smoke detectors to the fire alarm system. The Electrical Contractor shall provide fire alarm relays adjacent to the mechanical equipment, and the Mechanical Contractor shall wire to the ATC/BAS system to de-energize the fan.

E. The Electrical Contractor shall provide the kW/KWH transducer specified at each secondary metering location if required. The HVAC contractor shall provide control wiring to the points specified.

F. The Electrical Contractor shall provide auxiliary contacts on generator/transfer switch as required in the points list in Division 23. The HVAC Contractor shall provide control wiring to the points.

G. The HVAC Contractor shall provide all interlock wiring specific to equipment.

1.9 SITE CONSTRUCTION CONTRACT (SC)

A. The Work under the Site Construction Contract includes all construction and other activities traditionally recognized as site work required by any of the Contract Documents including, but not limited to, the site drawings, specification Divisions 00, 01, 31, 32 and 33 except when specifically assigned to another contract for construction. Work in the Site Construction Contract includes, but is not limited to, the following:

1. Work not identified as work under other contracts.
2. Site Preparation including demolition, clearing, grubbing, and earthwork.
3. Utility installation to inside the building pad at ultimate location shown on the MEP and FP Drawings and coordinated with MEP and FP Contractors for final layout. Excavation for all conduits and concrete pole bases. Trenching, stone base, and backfill for MEP Primes outside of building pad. All Primes to furnish and install any necessary conduits, piping etc. Site Contractor to coordinate with all other primes for trenching and backfill work. Utility Installation clarifications are as follows:
    a. Installation of underground storm piping and connections for downspout locations is by the SC. This includes all work from tie-ins to the main storm water runs to the building including the cast boot at grade where downspouts will tie-in. GC will make final connection of downspouts to cast boot. Coordinate all connection points of downspouts with GC.
    b. Installation of all sanitary piping and connections to include the installation of the oil/sand separator. PC will install all piping and connections from the building to the oil/sand separator.
    c. Installation of sanitary piping from valve location behind curb on the site to five feet outside the building. PC will bring sanitary to the exterior of the building and make final connections.
    d. PAWC (Utility Provider) will install all sanitary piping and structures in the public right of way to inside the curb line as shown.
    e. PAWC (Utility Provider) will install all water piping and structures in the public right of way and will also install the water meter pit. SC will install all water piping from the water meter pit to the Water/Sprinkler Room including the installation and testing of the riser in the Water/Sprinkler Room.

f. Installation of gas pipe casing/conduit/sleeves from the building and meter piping riser location to outside edge of driveway. UGI will install gas piping in right of way to include the service to the building inside the installed sleeve from the SC. UGI will conduct all excavation, installation, and backfill in the right of way. Refer to Civil plans for gas piping details and profiles.

4. Establishment of building pad to be provided at Finish Floor minus concrete slab and stone thickness.
5. All storm water systems to include piping, structures, and underground and or infiltration basins.
6. Construction of all new concrete curbs and sidewalks. Including subbase, ramps, and detectable warning surfaces.
7. Landscaping, seeding, topsoil, and mulching. SC is responsible for irrigation for complete stabilization until NOT is received for NPDES permit.
8. Existing Irrigation Line to the neighboring golf course on the South East corner of the site will be relocated by others. SC is required to coordinate all work in this area and confirm relocation has been completed prior to work taking place in this location.
9. Subbase stone and asphalt paving.
10. Subbase stone and concrete paving.
11. Parking bumpers/curb stops.
12. Excavation, grading, cut/fill, export, import, amended soils. All Earthwork responsibilities.
13. Line striping.
14. Fencing, gates, and operators. Coordinate all access control and power connections with EC and Access Control Vendor.
15. E&S Controls and maintenance thereof.
16. Post-mounted signage, and signals. Include temporary traffic signals and controls as required for new installation.
17. Grass cutting and maintenance from start of project through NOT.
18. Dumpster enclosure bollards and concrete only.
19. All Bollards.
20. SC is responsible for capping, rolling, and crowning site grade for positive flow of rain water until building pad is established.
21. Testing required for all water and sewer lines. Including videoing for all storm sewer, sanitary and water piping. Final cleaning of all storm piping prior to turnover to the Owner.
22. Concrete pads for all equipment including generator pad and excluding work under GC Contract.
23. Trenching, stone base and backfill for all Site electrical & data distribution including all conduit & pull boxes installations.
24. Site Contractor shall provide below grade drainage as shown on the Civil drawings.
25. Coordinate with all Owner's Vendors equipment. Review Owner's Vendors Equipment in Information to Bidders for items to be included in Bid.

1.10 GENERAL CONSTRUCTION CONTRACT (GC)

A. The Work under the General Construction Contract includes architectural and structural construction, and other activities traditionally recognized as general construction required by any of the Contract Documents including, but not limited to, the architectural and structural drawings, specification Divisions 00, 01, 03 through 14, except when specifically assigned to another Contract for construction. Work in the General Construction Contract includes, but is not limited to, the following:

1. Work not identified as work under other contracts.
2. All work shown on structural plans, all duct chases, and platforms. This includes all steel and miscellaneous metals construction.

~~2.~~a. Upon issuance of the Letter of Intent to Award to the Electrical and General Construction Prime Contractors, the Owner and Construction Manager request that the following submittals be provided for review due to anticipated lead times: Structural Steel, Pre-Engineered Metal Building System, Generator, and Automatic Transfer Switch (ATS). Submission of these items prior to contract execution shall be at the Prime Contractor's sole risk. Following issuance of the Notice to Proceed, the Prime Contractor may submit payment applications for reimbursement of approved costs associated with these submittals.

3. Dumpster Enclosure Privacy Slatted Fence and Posts. GC to coordinate install with SC for installation of post foundations and under slab work prior to concrete paving installation.
4. Foundations, including footings, foundation walls and column piers.
5. Slabs-on-grade, including earthwork, sub drainage systems, and insulation.
6. All concrete pads for all work including pads for all other primes within the building footprint.
7. Below-grade building construction, including excavation, backfill, and thermal and moisture protection.
8. Superstructure, including floor and roof construction.
9. Pre-Engineered Metal Building Structure including all hairpins, grade beams and footings.

~~9.~~a. The Construction Manager and Owner are requesting the General Construction Contractor provide submittals for the Pre-Engineered Metal Building System upon receiving their Letter of Intent to Award due to lead times. Submission of these items prior to contract execution shall be at the Prime Contractor's sole risk. Following issuance of the Notice to Proceed, the Prime Contractor may submit payment applications for reimbursement of approved costs associated with these submittals.

10. Insulation and fireproofing. GC to provide rated joints and assemblies outside of individual MEPF contractor firestopping of penetrations.
11. Exterior closures, including walls, doors, garage doors, four-fold doors, windows, sheathing, thermal and moisture protection and exterior finishes.
12. Masonry work to include all accessories and grout.
13. Exterior patio seat wall to include all excavation, concrete, masonry, and backfill. Coordinate all rough-ins for gas and electric with PC and EC.
14. Rough and finish carpentry.
15. Framing for all roof and floor openings and supported equipment, including coordination for all roof work.
16. General Contractor shall provide all door louvers.
17. All roofing, gutters and downspouts, roofing accessories, all blocking required for installation of roof curbs, and final flashing to roof curbs.
18. Interior construction, including partitions, insulation, doors (wood, hollow metal, aluminum, etc.), fittings, finishes, hardware, and glazing.
19. General floor flash patching and leveling.
20. Fire suppression specialties and fire-rated framing and glass.
21. Stairs, including railings and finishes.
22. General Contractor to clean and provide final polishing of terrazzo floors as indicated on the Construction Documents.
23. Finishes to include all flooring and floor systems, painting and coatings, countertops, lockers, tiling, wall coverings, corner guards, FRP, toilet accessories, toilet partitions, way finding signage and code signage.
24. GC is responsible for coordination and placement of 9/11 memorial steel. CG is responsible for providing memorial support structure and all miscellaneous features specified for a proper installation. Coordinate and confirm final placement with Construction Manager, Architect, and Owner.
25. Installation and finishing of access panels.

26. Installation of vendor supplied Antenna Mount for radio antenna. Complete all finishing and sealants on exterior of building for water tightness.
27. Furnishings, including casework, specialty casework, and window treatments.
28. Temporary fire protection including fire extinguishers.
29. Openings including windows, doors, and hardware. Provide all aluminum windows, storefronts, entrance doors, curtainwalls, glass, and glazing. Provide temporary opening enclosures as required.
30. Exterior Canopies and exterior Flagpoles. Flagpoles include foundations.
31. Monument Sign construction. Coordinate electrical with EC and Sign Vendor.
32. GC shall provide all final cleaning for move-in condition by the Owner. Final cleaning includes but is not limited to: removal of all debris; vacuuming of all floors; wet cleaning; ceramic floors mopped and cleaned accordingly; all fixtures cleaned and free of dust; all cabinets vacuumed of any dust or debris; all horizontal services wiped cleaned; all windows (glass and frames) cleaned inside and outside; all exterior surfaces cleaned and dirt free including sweeping and power washing as required.
33. Starting, commissioning, adjusting, and training of all General Construction systems and equipment in accordance with manufacturers' recommendations and in conjunction with Owner's Commissioning Verification and Testing Agent(s).
34. All drywall, metal studs, and insulation.
35. All acoustical ceilings and grid, and drywall ceilings.
36. All expansion joints and covers.
37. All interior and exterior building joint sealants.
38. Installation of manhole ring for training prop in Mezzanine floor.
39. Installation of Owner-furnished items as noted on the plans and specifications. This includes but is not limited to motorized chain winches, magnetic white boards, roller shades, and blocking for TV/monitor locations.
40. Provide all blocking necessary to install Owner-furnished items.
41. GC shall perform cutting and patching of all roofing materials including concrete and metal deck. Any structural reinforcement required is by the General Contractor.
42. GC is responsible for all caulking and sealing of all penetrations, expansion joints and transitions between dissimilar materials.
43. GC is responsible to protect all adjoining properties and Owner's existing property exterior to the building. The GC shall video the property prior to construction to identify any areas of concern and also video the building and property upon completion. Any necessary repairs will be the responsibility of the GC.
44. GC is responsible for safe pedestrian access along the entire frontage of the building.
45. GC shall be responsible for all sprinkler head penetrations that relate to new Fire Protection drawings. FPC shall verify all locations prior to install.

1.11 HVAC CONTRACT (MC/HVAC)

A. The Work under the HVAC Construction Contract includes all construction and other activities traditionally recognized as mechanical work required by any of the Contract Documents including, but not limited to, the HVAC drawings, specification Divisions 00, 01, 03, 07, 11, 14, 23 and 31 except when specifically assigned to another contract for construction. Work in the HVAC Contract includes, but is not limited to, the following:
   1. All Work as specified in the contract documents and shown on the Mechanical Drawings.
   2. HVAC Systems and Equipment as shown and specified.
   3. HVAC instrumentation and controls.
   4. Starting, Commissioning, adjusting, and training of all HVAC equipment.

5. Coordination of HVAC commissioning, testing, adjusting, and balancing in conjunction with the Owner's Commissioning Verification and Testing Agent(s).
6. Coordinate work with all contractors including, but not limited to electrical, general, and plumbing contractors. Coordinate and confirm locations and rough-in for all work with all contractors. Make location adjustments as required.
7. All roof curbs and accessories for HVAC equipment including louvers and vents. MC shall furnish curbs and layout for installation by GC.
8. All exhaust air systems.
9. Mechanical connections to equipment furnished by other contracts including dryer vents.
10. Final low voltage wiring and electrical connections to all heating, ventilating and air conditioning equipment as required.
11. Preparation of ductwork and HVAC/Electrical coordination drawings.
12. Firestopping of HVAC work.
13. All new duct work must be professionally cleaned prior to turnover of the system to the Owner.
14. MC shall be responsible for the disassembling and reassembling of any equipment related to their scope of work that does not fit in the accessible routes (Doors, Elevator, Stairs to Attic Area).
15. MC shall be responsible for coordinating with Exeter Township, CM, and Architect on the requirements of having any reassembled equipment and following the UL Certification Guidelines.
16. MC shall be responsible for maintaining all warranties for any equipment that is disassembled and reassembled.
17. MC shall implement the certification schedules into the Project Schedule to prevent long lead times and any delays with startup dates.
18. The MC shall be responsible for coordinating with the scope of the FPC as needed.
19. Provide temporary heat, as required; refer to Section 015000.
20. Provide temporary dust and fume control machines as required.

1.12 PLUMBING CONTRACT (PC)

A. The Work under the Plumbing Construction Contract includes all construction and other activities traditionally recognized as plumbing work required by any of the Contract Documents including, but not limited to, the plumbing drawings, specification Divisions 00, 01, 03, 07, 11, 14, 21, 22 and 31 except when specifically assigned to another contract for construction. Work in the Plumbing Contract includes, but is not limited to, the following:
1. All Work as specified in the contract documents and shown on the Plumbing Drawings.
2. Domestic water distribution from riser in Water/Sprinkler Room including main water service systems.
3. Plumbing fixtures including domestic water heater, combustion air, and vent.
4. Sanitary waste piping, accessories, and complete systems within the building to outside perimeter wall connections. PC to install sanitary piping and connections to the oil/sand separator on site.
5. Natural gas piping from meter through the entirety of the building and tie-ins to all equipment, fixtures, and appliances..
6. Plumbing connections to equipment furnished by the General Construction Contract, Fire Protection Contract, HVAC Contract, and Electrical Contract.
7. Plumbing Connections and installations required for Owner-furnished items as noted on the plans and specifications.
8. Coordinate work with all contractors including, but not limited to electrical, general, fire protection, and HVAC contractors. Coordinate and confirm locations and rough-in for all work with all contractors. Make location adjustments as required.
9. Firestopping of Plumbing Contractor Work.

10. Contractor shall include temporary feeds (including additional piping and valves) and connection to permanent system.
11. Perform all starting, commissioning, testing, adjusting, balancing, and training of all plumbing systems and equipment in accordance with the manufacturers' recommendations and in conjunction with Owner's Commissioning Verification and Testing Agent(s).
12. Coordinate with the EC on wiring and connections as needed.
13. All Plumbing fixtures as identified in the Contract Documents.
14. All devices such as hose bibbs, washing machine outlet box, water conditioner, water filter, and pet cock for icemaker.
15. Domestic water distribution.
16. Sanitary routing, waste, and vents.
17. Radon Piping and system as Delegated Design.
18. Low voltage final electrical connections to all plumbing contracts supplied electrically powered equipment.
19. New sanitary lines must be cleaned and videoed professionally prior to turnover of the system to the Owner.
20. Responsible for cutting, capping and or removing any existing lines (Copper, Steel, Aluminum Etc.) that are abandoned that interfere with any new construction and/or new equipment being installed.
21. Coordinate with all trades and to include the Owner and CM as needed.

1.13 FIRE PROTECTION CONTRACT (FPC)

A. The Work under the Fire Protection Construction Contract includes all construction and other activities traditionally recognized as fire protection work required by any of the Contract Documents including, but not limited to, the fire protection drawings, specification Divisions 00, 01, 03, 07, 11, 14, 21, 22 and 31 except when specifically assigned to another contract for construction. Work in the Fire Protection Contract includes, but is not limited to, the following:
1. Fire suppression sprinklers including pumps, sprinkler piping, heads, flow and tamper switches, corrosion mitigation system, trim, accessories, and support.
2. Fire suppression hydraulic calculations to size fire suppression system.
3. Professional engineered fire suppression drawings for submission to the Township and permit.
4. Perform all required Fire Protection system flushes and fills as required.
5. FPC shall coordinate with the GC on all penetrations for new and existing sprinkler heads.
6. Firestopping for Fire Protection Contractor Work.
7. Perform all starting, commissioning, testing, adjusting, balancing, and training of all fire protection systems and equipment in accordance with the manufacturers' recommendations and in conjunction with Owner's Commissioning Verification and Testing Agent(s).

1.14 ELECTRICAL CONTRACT (EC)

A. The Work under the Electrical Construction Contract includes all construction and other activities traditionally recognized as electrical work required by any of the Contract Documents including, but not limited to, the electrical drawings, specification Divisions 00, 01, 03, 07, 08, 11, 12, 14, 26, 27, 28, 31 and 33 except when specifically assigned to another contract for construction. Work in the Electrical Contract includes, but is not limited to, the following:
1. Site electrical distribution.
2. Site lighting including site pole concrete footing and bases.
3. Site conduits, ducts, handholes for lighting, power communications and security.

4. Electrical distribution.
5. Electrical grounding and bonding.
6. Lighting and power branch wiring.
7. Supply and Installation of generator systems, including automatic transfer switches and temporary generator connection equipment. Packaged Generator and ATS will be supplied by Owner through Co-operative Purchasing due to lead times. The Construction Manager and Owner are requesting the Electrical Contractor provide submittals for the Generator and ATS upon receiving their Letter of Intent to Award due to lead times. Submission of these items prior to contract execution shall be at the Prime Contractor's sole risk. Following issuance of the Notice to Proceed, the Prime Contractor may submit payment applications for reimbursement of approved costs associated with these submittals.
8. Digital clock systems and all required wiring.
9. Electrical connections to equipment furnished under other contracts.
10. Structural supports, hangers, sleeves and inserts for new electrical systems and components.
11. New sleeves through existing exterior walls for all electrical components.
12. Perform all starting, commissioning, testing, adjusting, balancing and training of all electrical systems and equipment in accordance with the manufacturers' recommendations and in conjunction with the Owner's Commissioning Verification and Testing Agent(s).
13. Luminaires, lighting controls and all accessories.
14. Fire detection and notification systems, including but not limited to smoke detectors, carbon monoxide detectors and horns/strobes.
15. Conduits and raceway for special systems as required.
16. Conduits and raceway for Owner Vendor systems as required.
17. Emergency lighting systems and exit signs.
18. Coordinate work with all contractors including, but not limited to plumbing, fire protection, general and HVAC contractors. Coordinate and confirm locations and rough-in for all work with all contractors. Make location adjustments as required.
19. Cable tray for all work as specified.
20. Spare site underground conduits with pull strings.
21. All rough-in including conduit, pull wire in conduit, and back boxes for all work.
22. Floor and wall boxes for all work.
23. Furnish and install all accessories, hangers, Velcro wraps, etc.
24. Provide electrical dimensions and drawings and assist HVAC Contractor in preparation of coordination drawings.
25. Firestopping of Electrical Contractor Work.
26. Furnish and install racks, patch panels, cross connect, and punch blocks.
27. Furnish and install wall jacks and face plates.
28. Provide equipment and all necessary wiring for interfacing of the following systems:
    a. HVAC equipment
    b. Temperature control
    c. Plumbing equipment
29. Coordinate utility transformer installation and all primary and secondary cable terminations with local utility.
30. Provide coordination, furnish and install conduit, duct banks, vaults, etc. for all power coming onto the site and all underground power to new transformer and electrical switchgear as shown on drawings and in compliance with Met-Ed requirements.

31. Coordinate work with all of the Owner's vendors and sub-contractors including, but not limited to Telecom, Security, and Audio Visual. Coordinate and confirm locations and rough-in for all work with all vendors and sub-contractors. Make location adjustments as required.
32. All work as shown on the Electrical drawings.
33. Site communications and security.
34. Special Electrical systems, including all conduit and pull strings for data connections.
35. High Voltage Electrical connections to equipment furnished by other contracts.
36. Receive, coordinate, install and connect Owner supplied items as identified. Electrical Connections and installations required for Owner-furnished items as noted on the plans and specifications.
37. Coordinate final connections and load bank test with Owner's vendor.
38. Coordinate electrical service to the building with Met-Ed. All work necessary to gain service to the building will be the responsibility of the EC.
39. EC to coordinate with FPC on Fire Protection. EC shall be responsible for reconnection to any boxes, wire pulls as needed. The EC shall be responsible for coordinating with the scope of the FPC as needed.
40. The EC is responsible for installing all equipment pertaining to their scope, it is the EC's responsibility for all means and methods of deliverables and to coordinate with the Manufacturer and County on mobilizing, disassembling, and reinstalling all equipment as needed. The EC shall be responsible for transporting all electrical equipment stored by the County to the site and assemble as needed.
41. EC shall be responsible for coordinating with Exeter Township, the CM and the Electrical Design Professional on the requirements of having any reassembled equipment and following the UL Certification Guidelines.
42. EC shall implement the certification schedules into the Project Schedule to prevent long lead times and any delays with startup dates.
43. EC shall lock out and tag circuit breakers and switches and shall check cables and wires to ensure they are de-energized to ground potential before Work begins.

1.15 OWNER-FURNISHED PRODUCTS

A. Owner will furnish products indicated. The Work includes providing support systems to receive Owner's equipment and making plumbing, fire protection, mechanical, and electrical connections.
   1. Owner will arrange for and deliver Shop Drawings, Product Data, and Samples to Contractor.
   2. Owner will arrange and pay for delivery of Owner-furnished and contractor installed items according to Contractor's Construction Schedule.
   3. After delivery, Owner will inspect delivered items for damage. Contractor shall be present for and assist in Owner's inspection.
   4. If Owner-furnished items are damaged, defective, or missing, Owner will arrange for replacement.
   5. Owner will arrange for manufacturer's field services and for delivery of manufacturer's warranties to Contractor.
   6. Owner will furnish Contractor the earliest possible delivery date for Owner-furnished products. Using Owner-furnished earliest possible delivery dates, Contractor shall designate delivery dates of Owner-furnished items in Contractor's Construction Schedule.
   7. Contractor shall review Shop Drawings, Product Data, and Samples and return them to Architect, noting discrepancies or anticipated problems in use of product.
   8. Contractor is responsible for receiving, unloading, and handling Owner-furnished items at Project site if identified as a Contractor installed item.
   9. Contractor is responsible for protecting Owner-furnished items from damage during storage and handling, including damage from exposure to the elements.

10. If Owner-furnished items are damaged as a result of Contractor's operations, Contractor shall repair or replace them.
11. Contractor shall install and otherwise incorporate Owner-furnished items into the Work.

PART 2 PRODUCTS (NOT USED)

PART 3 EXECUTION (NOT USED)

END OF SECTION 01 1200

SECTION 07 1900 - WATER REPELLENTS

PART 1 GENERAL

1.1 SECTION INCLUDES

A. Water repellents applied to exterior, masonry and concrete surfaces.

1.2 ACTION SUBMITTALS

A. Product Data: Provide product description, details of tests performed, limitations, chemical composition, and VOC content.
   1. Manufacturer's Installation Instructions: Indicate special procedures and conditions requiring special attention; cautionary procedures required during application.

B. Samples: For each type of water repellent and substrate indicated, 12 by 12 inches (300 by 300 mm) in size, with specified water-repellent treatment applied to half of each Sample.

1.3 INFORMATIONAL

A. Preconstruction Testing Reports: For water-repellent-treated substrates.

B. Manufacturer's Field Reports: Report whether manufacturer's "best practices" are being followed; if not, state corrective recommendations. Email report to Architect the same day as inspection occurs; mail report on manufacturer's letterhead to Architect within 2 days after inspection.

C. Installer's Qualification Statement.

1.4 QUALITY ASSURANCE

A. Installer Qualifications: Company specializing in performing work of type specified and with at least three years of documented experience and approved by manufacturer

B. Owner reserves the right to provide continuous independent inspection of surface preparation and application of water repellent.

1.5 MOCK-UPS

A. Prepare representative surface 36 by 36 inches in size using specified materials and preparation and application methods on surfaces identical to those to be coated; approved mock-up constitutes standard for workmanship.

B. For proposed substitutions, prepare side-by-side mock-ups of specified and substitute products.

C. Locate where directed.

D. Mock-up may remain as part of work.

1.6 FIELD CONDITIONS

A. Limitations: Proceed with application only when the following existing and forecasted weather and substrate conditions permit water repellents to be applied according to manufacturers' written instructions and warranty requirements:
   1. Protect liquid materials from freezing.
   2. Concrete surfaces and mortar have cured for not less than 28 days.
   3. Building has been closed in for not less than 30 days before treating wall assemblies.
   4. Ambient temperature is above 40 deg F (4.4 deg C) and below 100 deg F (37.8 deg C) and will remain so for 24 hours.
   5. Substrate is not frozen and surface temperature is above 40 deg F (4.4 deg C) and below 100 deg F (37.8 deg C).
   6. Rain or snow is not predicted within 24 hours.
   7. Not less than 24 hours have passed since surfaces were last wet.
   8. Windy conditions do not exist that might cause water repellent to be blown onto vegetation or surfaces not intended to be treated.

1.7 WARRANTY

A. Correct defective Work within a five year period after Date of Substantial Completion.

B. Special Warranty: Manufacturer's standard form in which Applicator agree(s) to repair or replace materials that fail to maintain water repellency due to materials and/or workmanship as specified within specified warranty period. Warranty does not include deterioration or failure of coating due to unusual weather phenomena, failure of prepared and treated substrates, and new substrate cracks in excess of 1/16 inch wide, fire, vandalism, or abuse by maintenance equipment.
   1. Warranty Period: Five years from date of Substantial Completion.

PART 2 PRODUCTS

2.1 PERFORMANCE REQUIREMENTS

A. General Performance: Water repellents shall meet performance requirements indicated without failure due to defective manufacture, fabrication, or installation.

B. Water Absorption: Minimum 90 percent reduction of water absorption after 24 hours in comparison of treated and untreated specimens.
   1. Cast-in Place Concrete: ASTM C 642.
   2. Concrete Masonry Units: ASTM C 140.

C. Water Penetration and Leakage through Masonry: Minimum 90 percent reduction in leakage rate in comparison of treated and untreated specimens, according to ASTM E 514.

D. Durability: Maximum 5 percent loss of water-repellent properties after 2500 hours of weathering according to ASTM G 154 in comparison to water-repellent-treated specimens before weathering.

E. Chloride-Ion Intrusion in Concrete: NCHRP Report 244, Series II tests.
   1. Reduction of Water Absorption: 80 percent.

2.2 MATERIALS

A. Water Repellent: Non-glossy, colorless, penetrating, water-vapor-permeable, non-yellowing sealer, that dries invisibly leaving appearance of substrate unchanged.
   1. Applications: Exterior, horizontal surfaces.
   2. Number of Coats: Two.
   3. VOC Content: See Section 01 6116.
   4. Solvent-based, silane, siloxane, silane-siloxane blend, or siliconate that reacts chemically with concrete, masonry.
      a. Manufacturers:
         1) Diedrich Technologies Inc.; Diedrich 303 WB.
         2) Euclid Chemical; Chemstop WB Heavy Duty.
         3) PROSOCO, Inc.; Sure Klean Weather Seal H40.
         4) Sika USA; Sikagard-200 Enviroseal.
         5) SpecChem; White Roc 10 WB.

PART 3 EXECUTION

3.1 EXAMINATION

A. Verify existing conditions before starting work.

B. Verify joint sealants are installed and cured.

C. Verify surfaces to be coated are dry, clean, and free of efflorescence, oil, or other matter detrimental to application of water repellent.

3.2 PREPARATION

A. Protection of Adjacent Work:
   1. Protect adjacent landscaping, property, and vehicles from drips and overspray.
   2. Protect adjacent surfaces not intended to receive water repellent.

B. Prepare surfaces to be coated as recommended by water repellent manufacturer for best results.

C. Do not start work until masonry mortar substrate is cured a minimum of 60 days.

D. Remove loose particles and foreign matter.

E. Remove oil and foreign substances with a chemical solvent that will not affect water repellent.

F. Scrub and rinse surfaces with water and let dry.

3.3 APPLICATION

A. Apply water repellent in accordance with manufacturer's instructions, using procedures and application methods recommended as producing the best results.
   1. Precast Concrete: At Contractor's option, first application of water repellent on units may be completed before installing them. Mask mortar and sealant bond surfaces to prevent water repellent from migrating onto joint surfaces.

B. Apply at rate recommended by manufacturer, continuously over entire surface.

C. Apply two coats, minimum.

D. Remove water repellent from unintended surfaces immediately by a method instructed by water repellent manufacturer.

E. Provide manufacturer's field service representative to inspect preparation and application work continuously during entire application period to ensure that manufacturer's "best practices" for preparation and application are being followed.

3.4 CLEANING

A. Immediately clean water repellent from adjoining surfaces and surfaces soiled or damaged by water-repellent application as work progresses. Correct damage to work of other trades caused by water-repellent application, as approved by Architect.

B. Comply with manufacturer's written cleaning instructions.

END OF SECTION 07 1900

SECTION 28 1000 - ACCESS CONTROL

PART 1 GENERAL

1.1 SECTION INCLUDES

A. Access control system requirements.

B. Access control point peripherals, including readers.

C. Accessories.

1.2 RELATED REQUIREMENTS

A. Section 07 8400 - Firestopping.

B. Section 08 7100 - Door Hardware: Electrically operated door hardware, for interface with access control system.

C. Section 26 0526 - Grounding and Bonding for Electrical Systems.

D. Section 26 0533.13 - Conduit for Electrical Systems.

E. Section 26 0553 - Identification for Electrical Systems: Identification products and requirements.

F. Section 28 4600 - Fire Detection and Alarm: For interface with access control system.

1.3 REFERENCE STANDARDS

A. NECA 1 - Standard for Good Workmanship in Electrical Construction; 2015.

B. NFPA 70 - National Electrical Code; Most Recent Edition Adopted by Authority Having Jurisdiction, Including All Applicable Amendments and Supplements.

C. NFPA 101 - Life Safety Code; Most Recent Edition Adopted by Authority Having Jurisdiction, Including All Applicable Amendments and Supplements.

D. UL 294 - Access Control System Units; Current Edition, Including All Revisions.

1.4 ADMINISTRATIVE REQUIREMENTS

A. Coordination:
   1. Coordinate the work with other installers to provide suitable door hardware as required for both access control functionality and code compliance.
   2. Coordinate the placement of readers with millwork, furniture, equipment, etc. installed under other sections or by others.
   3. Coordinate the work with other installers to provide power for equipment at required locations.

4. Notify DEDC, LLC of any conflicts with or deviations from Contract Documents. Obtain direction before proceeding with work.

B. Access Control Cloud Services:
1. Subscription fees to be paid by Owner.
2. Obtain Owner approval of subscription fees and terms of service prior to submittal.

C. Preinstallation Meetings:
1. Conduct meeting with facility representative to review reader and equipment locations.
2. Conduct meeting with facility representative and other related equipment manufacturers to discuss access control system interface requirements.

1.5 SUBMITTALS

A. See Section 01 3000 - Administrative Requirements, for submittal procedures.

B. Shop Drawings: Include plan views indicating locations of system components and proposed size, type, and routing of conduits and/or cables. Include elevations and details of proposed equipment arrangements. Include system interconnection schematic diagrams. Include requirements for interface with other systems.

C. Product Data: Provide manufacturer's standard catalog pages and data sheets for each system component. Include ratings, configurations, standard wiring diagrams, dimensions, finishes, service condition requirements, and installed features.

D. Evidence of qualifications for manufacturer.

E. Maintenance contracts.

F. Project Record Documents: Record actual locations of system components and installed wiring arrangements and routing.

G. Operation and Maintenance Data: Include detailed information on system operation, equipment programming and setup, replacement parts, and recommended maintenance procedures and intervals.
1. Include contact information for entity that will be providing contract maintenance and trouble call-back service.

1.6 QUALITY ASSURANCE

A. Comply with the following:
1. NFPA 70.
2. NFPA 101 (Life Safety Code).
3. The requirements of the local authorities having jurisdiction.
4. Applicable TIA/EIA standards.

B. Manufacturer Qualifications: Company specializing in manufacturing the products specified in this section with minimum three years documented experience.

1.7 DELIVERY, STORAGE, AND HANDLING

A. Receive, inspect, handle, and store products in accordance with manufacturer's instructions.

B. Store products in manufacturer's unopened packaging, keep dry and protect from damage until ready for installation.

1.8 FIELD CONDITIONS

A. Maintain field conditions within manufacturer's required service conditions during and after installation.

1.9 WARRANTY

A. See Section 01 7800 - Closeout Submittals, for additional warranty requirements.

B. Provide minimum one year manufacturer warranty covering repair or replacement due to defective materials or workmanship.

PART 2 PRODUCTS

2.1 ACCESS CONTROL SYSTEM REQUIREMENTS

A. Provide new access control system consisting of required equipment, conduit, boxes, wiring, connectors, hardware, supports, accessories, software, system programming, etc. as necessary for a complete operating system that provides the functional intent indicated.

B. System Battery Backup: Provide batteries/uninterruptible power supplies (UPS) as required for 5 minutes full operation.

C. Provide products listed, classified, and labeled as suitable for the purpose intended.
1. Access Control Units and Readers: Listed and labeled as complying with UL 294.

2.2 ACCESS CONTROL POINT PERIPHERALS

A. Provide devices compatible with control units and software.

B. Provide devices suitable for operation under the service conditions at the installed location.

C. Readers and Keypads:
1. General Requirements:
a. Provide readers compatible with credentials to be used.
b. Color: To be selected by Architect from manufacturer's available standard colors.

D. Door Locking Devices (Electric Strikes and Magnetic Locks): Comply with Section 08 7100.

2.3 ACCESSORIES

A. Provide components as indicated or as required for connection of access control system to devices and other systems indicated.

B. Unless otherwise indicated, credentials to be provided by Contractor.
   1. Provide credentials compatible with readers and control units/software to be used.

C. Provide cables as indicated or as required for connections between system components.

D. Provide end-of-line resistors (EOLR) as required for supervision of hardwired connections.

E. Provide accessory racks/cabinets as indicated or as required for equipment mounting.

PART 3 EXECUTION

3.1 EXAMINATION

A. Verify that field measurements are as indicated.

B. Verify that ratings and configurations of system components are consistent with the indicated requirements.

C. Verify that mounting surfaces are ready to receive system components.

D. Verify that branch circuit wiring installation is completed, tested, and ready for connection to system.

E. Verify that conditions are satisfactory for installation prior to starting work.

3.2 INSTALLATION

A. Install access control system in accordance with NECA 1 (general workmanship).

B. Install products in accordance with manufacturer's instructions.

C. Wiring Method: Unless otherwise indicated, use wiring in conduit.
   1. Use suitable listed cables in wet locations, including underground raceways.
   2. Use suitable listed cables for vertical riser applications.
   3. Conduit: Comply with Section 26 0533.13.
   4. Use power transfer hinges complying with Section 08 7100 for concealed connections to door hardware.
   5. Do not exceed manufacturer's recommended maximum cable length between components.

D. Provide grounding and bonding in accordance with Section 26 0526.

E. Install firestopping to preserve fire resistance rating of partitions and other elements, using materials and methods specified in Section 07 8400.

F. Identify system wiring and components in accordance with Section 26 0553.

3.3 FIELD QUALITY CONTROL

A. See Section 01 4000 - Quality Requirements, for additional requirements.

B. Prepare and start system in accordance with manufacturer's instructions.

C. Program system parameters according to requirements of Owner.

D. Test for proper interface with other systems.

E. Correct defective work, adjust for proper operation, and retest until entire system complies with Contract Documents.

3.4 CLEANING

A. Clean exposed surfaces to remove dirt, paint, or other foreign material and restore to match original factory finish.

3.5 CLOSEOUT ACTIVITIES

A. See Section 01 7800 - Closeout Submittals, for closeout submittals.

B. See Section 01 7900 - Demonstration and Training, for additional requirements.

C. Demonstration: Demonstrate proper operation of system to Owner, and correct deficiencies or make adjustments as directed.

D. Training: Train Owner's personnel on operation, adjustment, and maintenance of system.
1. Use operation and maintenance manual as training reference, supplemented with additional training materials as required.
2. Provide minimum of four hours of training.
3. Instructor: Manufacturer's authorized representative.
4. Location: At project site.

3.6 PROTECTION

A. Protect installed system components from subsequent construction operations.

3.7 MAINTENANCE

A. Provide to Owner, at no extra cost, a separate maintenance contract for the service and maintenance of access control system for two years from date of Substantial Completion; Include a complete description of preventive maintenance, systematic examination, adjustment, cleaning, inspection, and testing, with a detailed schedule.

B. Conduct site visit at least once every three months to perform inspection, testing, and preventive maintenance. Submit report to Owner indicating maintenance performed along with evaluations and recommendations.

C. Provide trouble call-back service upon notification by Owner:
1. Include allowance for call-back service during normal working hours at no extra cost to Owner.

2. Owner will pay for call-back service outside of normal working hours on an hourly basis, based on actual time spent at site and not including travel time; include hourly rate and definition of normal working hours in maintenance contract.

END OF SECTION 28 1000