GENERAL LIGHTING NOTES

A ALL LIGHTING FIXTURES SHALL BE FED FROM A JUNCTION BOX WITH 6' WHIPS.

B E.C. SHALL COORDINATE MOUNTING HEIGHTS OF ALL LIGHTS AND EXIT SIGNS IN FIELD WITH CEILING TYPES AND ARCHITECTURAL DRAWINGS.

C ALL ROOM CONTROLLERS AND OCCUPANCY SENSORS SHALL BE SET FOR 20 MIN. MAX VACANCY TIME.

D ALL EXIT SIGNS SHALL BE FED UNSWITCHED FROM THE NEAREST LOCAL LIGHTING CIRCUIT IN AREA IN WHICH FIXTURE IS SERVING.

E ALL WIRING SHOWN DASHED FROM ROOM CONTROLLERS REPRESENT LOW VOLTAGE CAT-6 WIRING. ALL DARK SOLID LINES SHOWN FROM ROOM CONTROLLERS REPRESENTS LINE VOLTAGE SWITCH LEGS. IF MULTIPLE SWITCH LEGS ARE SHOWN FROM ROOM CONTROLLER EACH IS FED FROM A SEPARATE RELAY INTEGRAL TO THE CONTROLLER, AS SUCH, EACH RELAY SHALL BE CONTROLLED BY IT'S OWN MANUAL CONTROL DEVICE, IF PRESENT IN THE AREA, AND SHALL BE PROGRAMMED TO BE OVERALL CONTROLLED BY THE OCCUPANCY SENSOR AS SHOWN IN LIGHTING CONTROL SCHEDULE.

F E.C. SHALL REFER TO LIGHTING CONTROL WIRING DIAGRAMS ON DRAWING E000 FOR ADDITIONAL LIGHTING CONTROL INFORMATION.

G ALL LIGHTING INSTALLED IN PATHS OF EGRESS THAT ARE CONTROLLED BY OCCUPANCY SENSORS SHALL HAVE A FIRE ALARM CONTROL MODULE FURNISHED, INSTALLED, AND WIRED INTO THE LIGHTING CONTROLLER TO AUTOMATICALLY PUSH LIGHTING TO 100% ON IN EVENT OF FIRE ALARM SYSTEM ACTIVATION. E.C. SHALL FURNISH AND INSTALL AN ADDITIONAL RCSP DEVICE TO INTERFACE BETWEEN THE LIGHTING CONTROL SYSTEM AND FIRE ALARM SYSTEM INPUT. E.C. SHALL INSTALL ALL WIRING AND DEVICES PER MANUFACTURER'S WRITTEN INSTALLATION INSTRUCTIONS.

H ROOM CONTROLLERS ARE SHOWN IN THEIR LOCATIONS FOR CIRCUITING CLARITY. E.C. SHALL FURNISH AND INSTALL ALL ROOM CONTROLLERS IN EASILY ACCESSIBLE LOCATION ABOVE CEILING.

J ALL LOCATIONS SHOWN WITH MULTIPLE SWITCHES SHALL BE INSTALLED IN A MULTI-GANG BOX FOR QUANTITY OF DEVICES AS SHOWN ON PLANS. E.C. SHALL COORDINATE ALL LOCATIONS AND QUANTITIES WITH ELECTRICAL AND ARCHITECTURAL DRAWINGS.

KEYNOTES

1 E.C. SHALL FURNISH AND INSTALL UNDER CABINET LIGHTING WITH ALL ASSOCIATED TRANSFORMERS AND CONTROLLERS AS REQUIRED. E.C. SHALL COORDINATE EXACT LOCATIONS AND LENGTHS IN FIELD WITH MILLWORK AND ARCHITECTURAL DRAWINGS PRIOR TO COMMENCEMENT OF NEW WORK.

2 E.C. SHALL FURNISH AND INSTALL LIGHT FIXTURES IN EXPOSED CEILING AREAS AT 9'-0" A.F.F. UNLESS OTHERWISE NOTED. E.C. SHALL COORDINATE EXACT LOCATIONS AND HEIGHTS WITH OTHER TRADES, ARCHITECTURAL DRAWINGS, AND OWNER'S REPRESENTATIVE PRIOR TO COMMENCEMENT OF NEW WORK.

3 E.C. SHALL FURNISH AND INSTALL LIGHTING ALONG THE UNDERSIDE OF TOE KICK WITH ALL ASSOCIATED TRANSFORMERS AND CONTROLLERS AS REQUIRED. E.C. SHALL TIE IN LIGHTING CONTROL TO FIRE STATION ALERTING SYSTEM AS REQUIRED AND COORDINATED WITH FIRE ALARM CONTRACTOR AND OWNER'S REPRESENTATIVE PRIOR TO COMMENCEMENT OF NEW WORK. E.C. SHALL COORDINATE EXACT LOCATIONS AND LENGTHS IN FIELD WITH MILLWORK AND ARCHITECTURAL DRAWINGS PRIOR TO COMMENCEMENT OF NEW WORK.

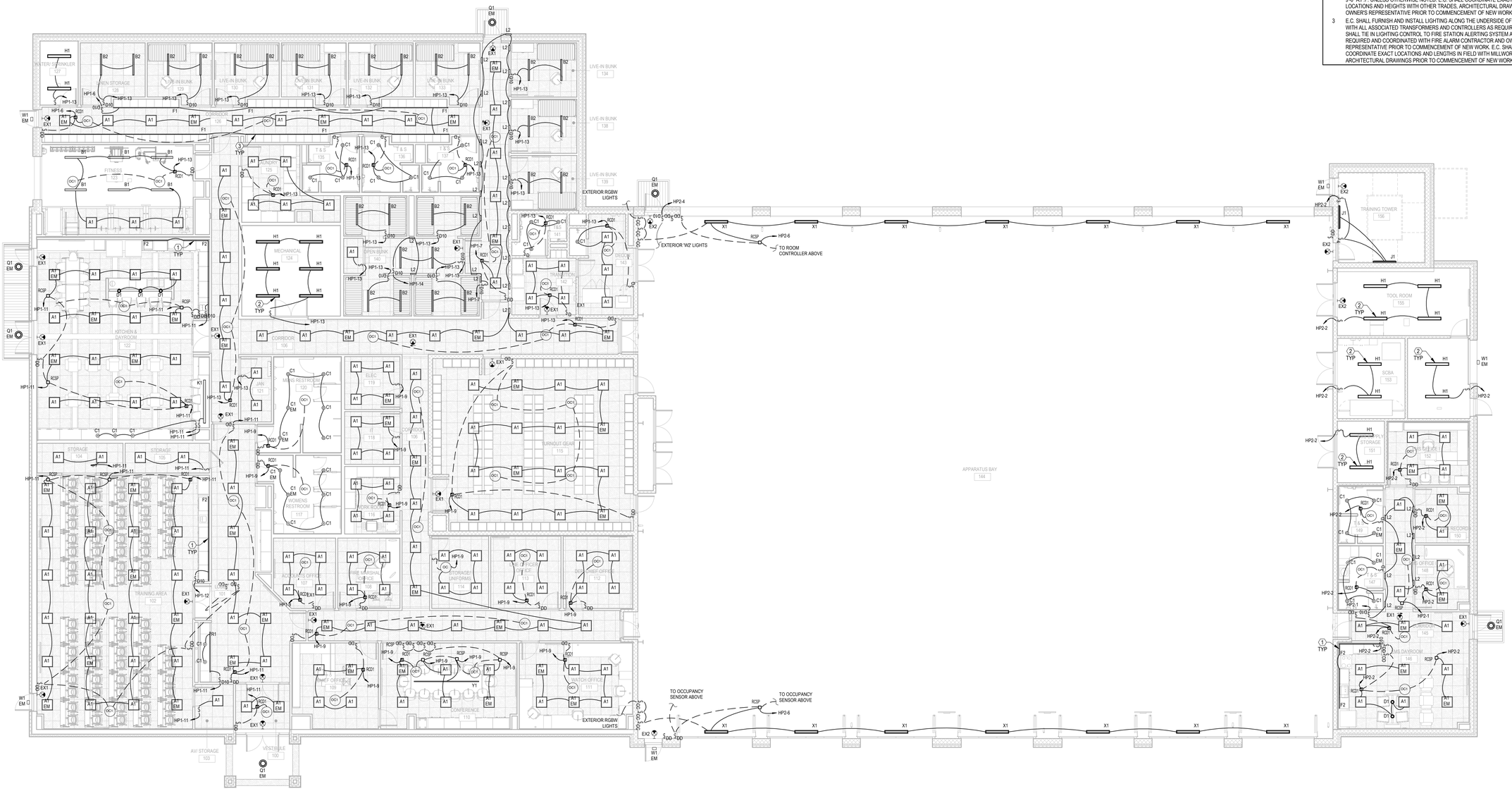

1 **FIRST FLOOR LIGHTING PLAN**
1/8" = 1'-0"

ALL DRAWINGS ARE PROTECTED BY FEDERAL COPYRIGHT BY MANNS WOODWARD STUDIOS, INC. AND CAN NOT BE REPRODUCED OR MODIFIED IN ANY MANNER WITHOUT WRITTEN PERMISSION. DOCUMENTS MAY NOT BE USED IN PART OR WHOLE TO DEVELOP THE DESIGN OF ANOTHER BUILDING WITHOUT EXPRESS WRITTEN PERMISSION BY MANNS WOODWARD STUDIOS.

MW STUDIOS
ARCHITECTURE + MASTER PLANNING
8098 SANDPIPER CIR, SUITE H
NOTTINGHAM, MD 21236
410-344-1460
INFO@MWSARCH.COM
WWW.MWSARCH.COM

CONSULTANT:

DEDC
ENGINEERING | DESIGN | CONSULTING
Delaware
212 S. Chapel Street
Newark, DE 19711
Phone
302.738.7172
Fax
302.738.7175
www.dedc-eng.com
Pennsylvania
Donna Morris Plaza
30 S. 17th Street
Suite 820
Philadelphia, PA 19103
Phone
267.804.7286

SEAL:

COMMONWEALTH OF PENNSYLVANIA
REGISTERED PROFESSIONAL
SCOTTIN FRENCH
ENGINEER
PE084124

EXETER TOWNSHIP
EMERGENCY SERVICES FACILITY
70 GIBRALTAR ROAD
READING PA 19606

PROJECT NUMBER: 25-049

SUBMISSION:
BID SET

ORIGINAL ISSUE DATE:
10/01/2026

SHEET REVISION SCHEDULE:
No. DATE

FIRST FLOOR LIGHTING PLAN

SHEET NUMBER:
E301

10/1/2026 1:38:08 PM

GENERAL LIGHTING NOTES

A ALL LIGHTING FIXTURES SHALL BE FED FROM A JUNCTION BOX WITH 6' WHIPS.

B E.C. SHALL COORDINATE MOUNTING HEIGHTS OF ALL LIGHTS AND EXIT SIGNS IN FIELD WITH CEILING TYPES AND ARCHITECTURAL DRAWINGS.

C ALL ROOM CONTROLLERS AND OCCUPANCY SENSORS SHALL BE SET FOR 20 MIN. MAX VACANCY TIME.

D ALL EXIT SIGNS SHALL BE FED UNSWITCHED FROM THE NEAREST LOCAL LIGHTING CIRCUIT IN AREA IN WHICH FIXTURE IS SERVING.

E ALL WIRING SHOWN DASHED FROM ROOM CONTROLLERS REPRESENT LOW VOLTAGE CAT-6 WIRING. ALL DARK SOLID LINES SHOWN FROM ROOM CONTROLLERS REPRESENTS LINE VOLTAGE SWITCH LEGS. IF MULTIPLE SWITCH LEGS ARE SHOWN FROM ROOM CONTROLLER EACH IS FED FROM A SEPARATE RELAY INTEGRAL TO THE CONTROLLER, AS SUCH, EACH RELAY SHALL BE CONTROLLED BY IT'S OWN MANUAL CONTROL DEVICE, IF PRESENT IN THE AREA, AND SHALL BE PROGRAMMED TO BE OVERALL CONTROLLED BY THE OCCUPANCY SENSOR AS SHOWN IN LIGHTING CONTROL SCHEDULE.

F E.C. SHALL REFER TO LIGHTING CONTROL WIRING DIAGRAMS ON DRAWING E000 FOR ADDITIONAL LIGHTING CONTROL INFORMATION.

G ALL LIGHTING INSTALLED IN PATHS OF EGRESS THAT ARE CONTROLLED BY OCCUPANCY SENSORS SHALL HAVE A FIRE ALARM CONTROL MODULE FURNISHED, INSTALLED, AND WIRED INTO THE LIGHTING CONTROLLER TO AUTOMATICALLY PUSH LIGHTING TO 100% ON IN EVENT OF FIRE ALARM SYSTEM ACTIVATION. E.C. SHALL FURNISH AND INSTALL AN ADDITIONAL RCSP DEVICE TO INTERFACE BETWEEN THE LIGHTING CONTROL SYSTEM AND FIRE ALARM SYSTEM INPUT. E.C. SHALL INSTALL ALL WIRING AND DEVICES PER MANUFACTURER'S WRITTEN INSTALLATION INSTRUCTIONS.

H ROOM CONTROLLERS ARE SHOWN IN THEIR LOCATIONS FOR CIRCUITING CLARITY. E.C. SHALL FURNISH AND INSTALL ALL ROOM CONTROLLERS IN EASILY ACCESSIBLE LOCATION ABOVE CEILING.

J ALL LOCATIONS SHOWN WITH MULTIPLE SWITCHES SHALL BE INSTALLED IN A MULTI-GANG BOX FOR QUANTITY OF DEVICES AS SHOWN ON PLANS. E.C. SHALL COORDINATE ALL LOCATIONS AND QUANTITIES WITH ELECTRICAL AND ARCHITECTURAL DRAWINGS.

KEYNOTES

1 E.C. SHALL FURNISH AND INSTALL LIGHT FIXTURES IN APPARATUS BAY CEILING AREA AT 17'-0" A.F.F. UNLESS OTHERWISE NOTED. E.C. SHALL INSTALL WHERE BOTTOM OF LIGHT FIXTURES ARE IN LINE WITH BOTTOM OF RADIANT HEATERS AS TO NOT DAMAGE THE FIXTURE. E.C. SHALL COORDINATE EXACT LOCATION WITH RADIANT HEATERS, FANS, AND OTHER EQUIPMENT AS TO MAINTAIN REQUIRED CLEARANCES. E.C. SHALL COORDINATE EXACT LOCATIONS AND HEIGHTS WITH OTHER TRADES, ARCHITECTURAL DRAWINGS, AND OWNER'S REPRESENTATIVE PRIOR TO COMMENCEMENT OF NEW WORK.

2 E.C. SHALL FURNISH AND INSTALL LIGHT FIXTURES IN EXPOSED CEILING MEZZANINE AREA TO UNDERSIDE OF ROOF DECK. E.C. SHALL COORDINATE EXACT LOCATIONS AND HEIGHTS WITH OTHER TRADES, ARCHITECTURAL DRAWINGS, AND OWNER'S REPRESENTATIVE PRIOR TO COMMENCEMENT OF NEW WORK.

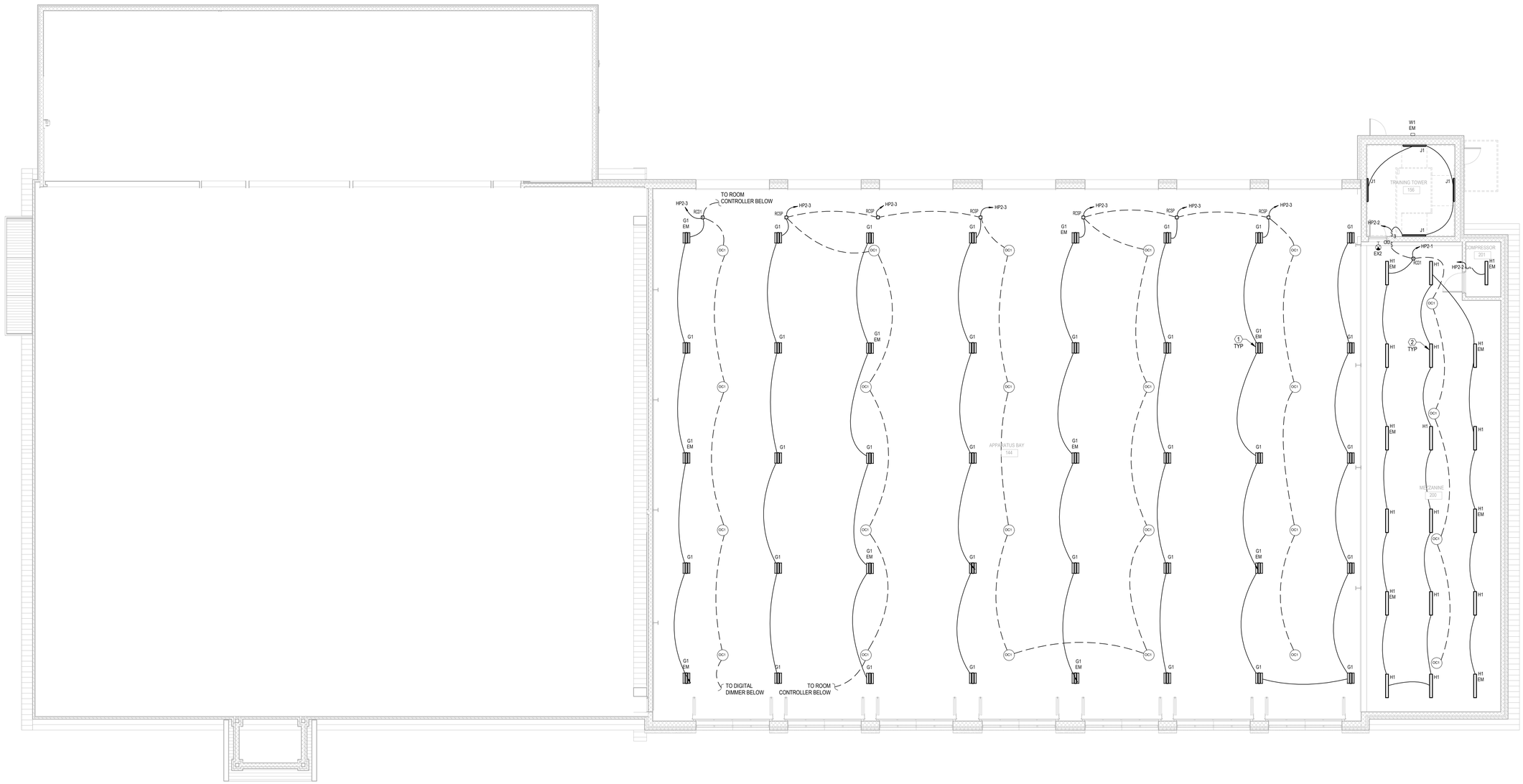

1 **MEZZANINE LIGHTING PLAN**
1/8" = 1'-0"

ALL DRAWINGS ARE PROTECTED BY FEDERAL COPYRIGHT BY MANNS WOODWARD STUDIOS, INC. AND CAN NOT BE REPRODUCED OR MODIFIED IN ANY MANNER WITHOUT WRITTEN PERMISSION. DOCUMENTS MAY NOT BE USED IN PART OR WHOLE TO DEVELOP THE DESIGN OF ANOTHER BUILDING WITHOUT EXPRESS WRITTEN PERMISSION BY MANNS WOODWARD STUDIOS.

MW STUDIOS
ARCHITECTURE + MASTER PLANNING
8098 SANDPIPER CIR, SUITE H
NOTTINGHAM, MD 21236
410-344-1460
INFO@MWSARCH.COM
WWW.MWSARCH.COM

CONSULTANT:

DEDC
ENGINEERING | DESIGN | CONSULTING
Delaware
212 S. Chapel Street
Newark, DE 19711
Phone
302.738.7172
Fax
302.738.7175
www.dedc-eng.com
Pennsylvania
Drexel Morris Plaza
30 S. 17th Street
Suite 820
Philadelphia, PA 19103
Phone
267.804.7286

SEAL:

COMMONWEALTH OF PENNSYLVANIA
REGISTERED PROFESSIONAL
SCOTTIN FRENCH
ENGINEER
PE084129

EXETER TOWNSHIP
EMERGENCY SERVICES FACILITY
70 GIBRALTAR ROAD
READING PA 19606

PROJECT NUMBER: 25-049

SUBMISSION:
BID SET

ORIGINAL ISSUE DATE:
10/01/2026

SHEET REVISION SCHEDULE:
No. DATE

MEZZANINE LIGHTING PLAN

SHEET NUMBER:
E302

10/1/2026 12:13:32 PM

KEYNOTES

1 ELECTRICAL CONTRACTOR SHALL FURNISH AND INSTALL FLUSH MOUNTED SINGLE GANG NEMA 5-20R DUPLEX RECEPTACLE AND SINGLE GANG 4-PORT DATA JACK AT COMMERCIAL ALERTING DISPLAYS.

GENERAL ALERTING NOTES

A E.C. SHALL COORDINATE ALL DEVICE LOCATIONS IN FIELD WITH ALERTING SYSTEM DRAWING AND OTHER TRADES BEFORE WORK COMMENCES.

B E.C. SHALL REFER TO DRAWING E-001 FOR LEGEND INFORMATION.

C PROVIDE CUTTING, PATCHING, AND RESTORATION OF FINISHES NECESSARY FOR WORK SURFACES DAMAGED BY THIS WORK. SPACES AROUND CONDUITS PASSING THROUGH FLOORS AND WALLS SHALL BE NEATLY PATCHED AND FINISHED TO MATCH NEW/EXISTING. STRUCTURAL MEMBERS SHALL NOT BE CUT OR PENETRATED IN ANY MANNER. THE SPACES AROUND THE CONDUITS SHALL BE SEALED TO PREVENT ENTRANCE OF MOISTURE. PROVIDE FIRE STOPPING PER UL APPROVED METHODS.

D ALL WIRING DEVICES SHOWN ON BLOCK WALLS SHALL BE FURNISHED AND INSTALLED RECESSED FLUSH WITH BLOCK WALL. ALL CONDUITS AND WIRING FEEDING DEVICES SHALL BE INSTALLED IN HOLLOW OF BLOCK WALL. E.C. SHALL COORDINATE ALL WORK WITH MASONS BEFORE CONSTRUCTION COMMENCES.

E E.C. SHALL ENSURE ALL LOW-VOLTAGE CABLE THAT CROSSES ANY EXPOSED CEILING SHALL BE INSTALLED IN EMT.

F REFER TO ALERTING SYSTEMS DRAWINGS FOR ALL ALERTING SYSTEM BOX SIZES, CONDUIT SIZES, EQUIPMENT DIMENSIONS, AND SUPPLEMENTAL INFORMATION TO MAKE ALL PATHWAYS READY FOR ALERTING SYSTEM VENDOR INSTALLATION.

G E.C. SHALL COORDINATE ALL INSTALLATION LOCATIONS AND QUANTITIES WITH OWNER'S ALERTING SYSTEM VENDOR PRIOR TO COMMENCEMENT OF WORK.

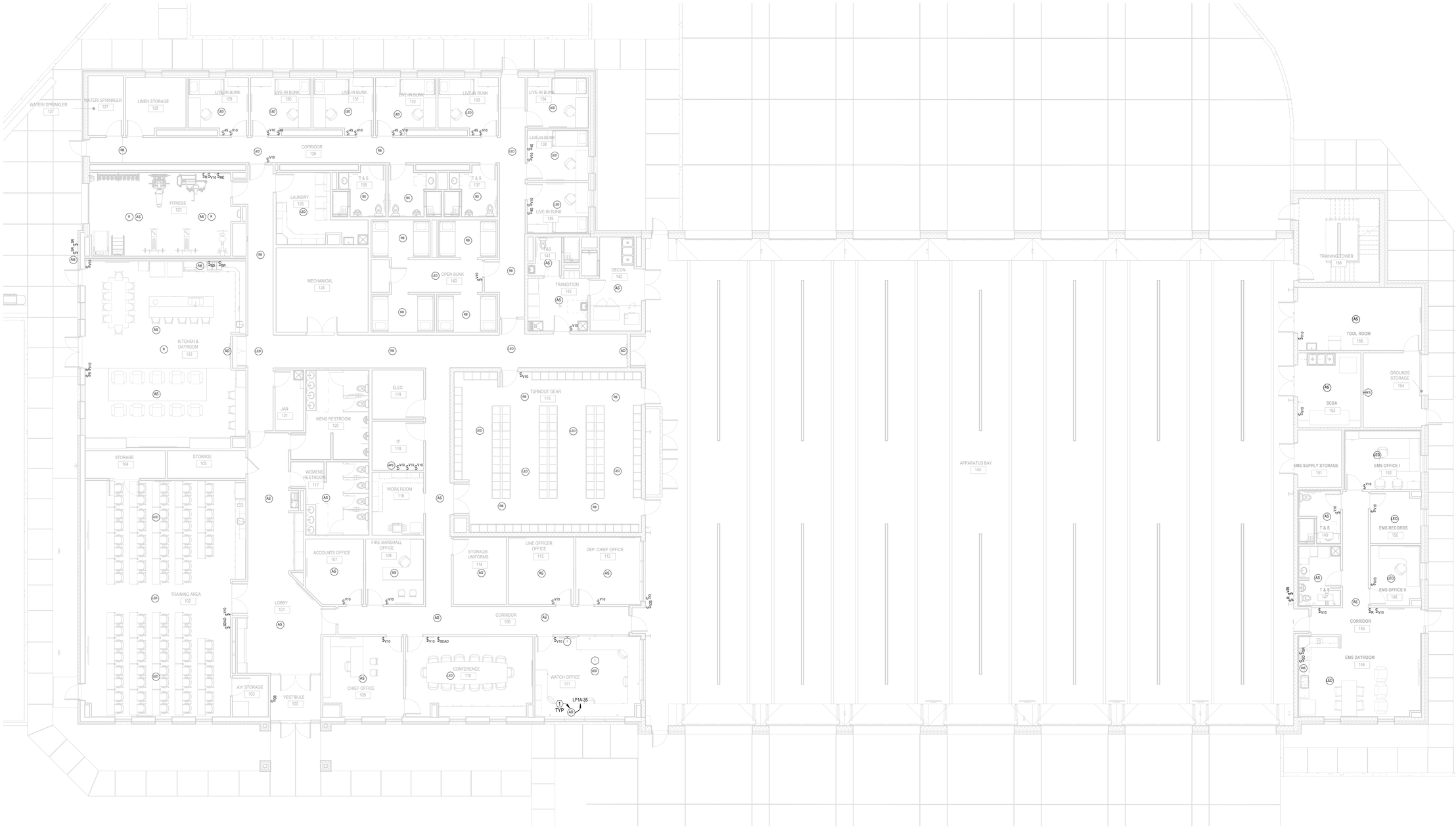

1 FIRST FLOOR ALERTING SYSTEMS PLAN

1/8" = 1'-0"

ALL DRAWINGS ARE PROTECTED BY FEDERAL COPYRIGHT BY MANNS WOODWARD STUDIOS, INC. AND CAN NOT BE REPRODUCED OR MODIFIED IN any MANNER WITHOUT WRITTEN PERMISSION. DOCUMENTS MAY NOT BE USED IN PART OR WHOLE TO DEVELOP THE DESIGN OF ANOTHER BUILDING WITHOUT EXPRESS WRITTEN PERMISSION BY MANNS WOODWARD STUDIOS.

MW STUDIOS
ARCHITECTURE + MASTER PLANNING
8098 SANDPIPER CIR, SUITE H
NOTTINGHAM, MD 21236
410-344-1460
INFO@MWSARCH.COM
WWW.MWSARCH.COM

CONSULTANT:

DEDC
ENGINEERING | DESIGN | CONSULTING
Delaware
212 S. Chapel Street
Newark, DE 19711
Phone
302.738.7172
Fax
302.738.7175
www.dedc-eng.com
Pennsylvania
Donna Morris Plaza
30 S. 17th Street
Suite 820
Philadelphia, PA 19103
Phone
267.804.7286

SEAL:

COMMONWEALTH OF PENNSYLVANIA
REGISTERED PROFESSIONAL
SCOTT W. FRENCH
ENGINEER
PE084132

EXETER TOWNSHIP
EMERGENCY SERVICES FACILITY
70 GIBRALTAR ROAD
READING PA 19606

PROJECT NUMBER: 25-049

SUBMISSION:
BID SET

ORIGINAL ISSUE DATE:
10/01/2026

SHEET REVISION SCHEDULE:
No. DATE

FIRST FLOOR ALERTING PLAN

SHEET NUMBER:
E401

10/1/2026 1:38:48 PM

KEYNOTES

1 ELECTRICAL CONTRACTOR SHALL FURNISH AND INSTALL FLUSH MOUNTED SINGLE GANG NEMA 5-20R DUPLEX RECEPTACLE AND SINGLE GANG 4-PORT DATA JACK AT COMMERCIAL ALERTING DISPLAYS.

GENERAL ALERTING NOTES

A E.C. SHALL COORDINATE ALL DEVICE LOCATIONS IN FIELD WITH ALERTING SYSTEM DRAWING AND OTHER TRADES BEFORE WORK COMMENCES.

B E.C. SHALL REFER TO DRAWING E-001 FOR LEGEND INFORMATION.

C PROVIDE CUTTING, PATCHING, AND RESTORATION OF FINISHES NECESSARY FOR WORK SURFACES DAMAGED BY THIS WORK. SPACES AROUND CONDUITS PASSING THROUGH FLOORS AND WALLS SHALL BE NEATLY PATCHED AND FINISHED TO MATCH NEW/EXISTING. STRUCTURAL MEMBERS SHALL NOT BE CUT OR PENETRATED IN ANY MANNER. THE SPACES AROUND THE CONDUITS SHALL BE SEALED TO PREVENT ENTRANCE OF MOISTURE. PROVIDE FIRE STOPPING PER UL APPROVED METHODS.

D ALL WIRING DEVICES SHOWN ON BLOCK WALLS SHALL BE FURNISHED AND INSTALLED RECESSED FLUSH WITH BLOCK WALL. ALL CONDUITS AND WIRING FEEDING DEVICES SHALL BE INSTALLED IN HOLLOW OF BLOCK WALL. E.C. SHALL COORDINATE ALL WORK WITH MASONS BEFORE CONSTRUCTION COMMENCES.

E E.C. SHALL ENSURE ALL LOW-VOLTAGE CABLE THAT CROSSES ANY EXPOSED CEILING SHALL BE INSTALLED IN EMT.

F REFER TO ALERTING SYSTEMS DRAWINGS FOR ALL ALERTING SYSTEM BOX SIZES, CONDUIT SIZES, EQUIPMENT DIMENSIONS, AND SUPPLEMENTAL INFORMATION TO MAKE ALL PATHWAYS READY FOR ALERTING SYSTEM VENDOR INSTALLATION.

G E.C. SHALL COORDINATE ALL INSTALLATION LOCATIONS AND QUANTITIES WITH OWNER'S ALERTING SYSTEM VENDOR PRIOR TO COMMENCEMENT OF WORK.



1 **MEZZANINE ALERTING PLAN**
1/8" = 1'-0"

MANNS WOODWARD STUDIOS
ARCHITECTURE + MASTER PLANNING
8098 SANDPIPER CIR, SUITE H
NOTTINGHAM, MD 21236
410-344-1460
INFO@MWSARCH.COM
WWW.MWSARCH.COM

CONSULTANT:

DEDC
ENGINEERING | DESIGN | CONSULTING
Delaware
212 S. Chapel Street
Newark, DE 19711
Phone
302.738.7172
Fax
302.738.7175
www.dedc-eng.com
Pennsylvania
Donna Morris Plaza
30 S. 17th Street
Suite 820
Philadelphia, PA 19103
Phone
267.804.7286

SEAL:

COMMONWEALTH OF PENNSYLVANIA
REGISTERED PROFESSIONAL
SCOTTIN FRENCH
ENGINEER
PE084132

EXETER TOWNSHIP
EMERGENCY SERVICES FACILITY
70 GIBRALTAR ROAD
READING PA 19606

PROJECT NUMBER: 25-049

SUBMISSION:
BID SET

ORIGINAL ISSUE DATE:
10/01/2026

SHEET REVISION SCHEDULE:
No. DATE

MEZZANINE ALERTING PLAN

SHEET NUMBER:
E402

10/1/2026 12:13:41 PM

ALL DRAWINGS ARE PROTECTED BY FEDERAL COPYRIGHT BY MANNS WOODWARD STUDIOS, INC. AND CAN NOT BE REPRODUCED OR MODIFIED IN ANY MANNER WITHOUT WRITTEN PERMISSION. DOCUMENTS MAY NOT BE USED IN PART OR WHOLE TO DEVELOP THE DESIGN OF ANOTHER BUILDING WITHOUT EXPRESS WRITTEN PERMISSION BY MANNS WOODWARD STUDIOS.

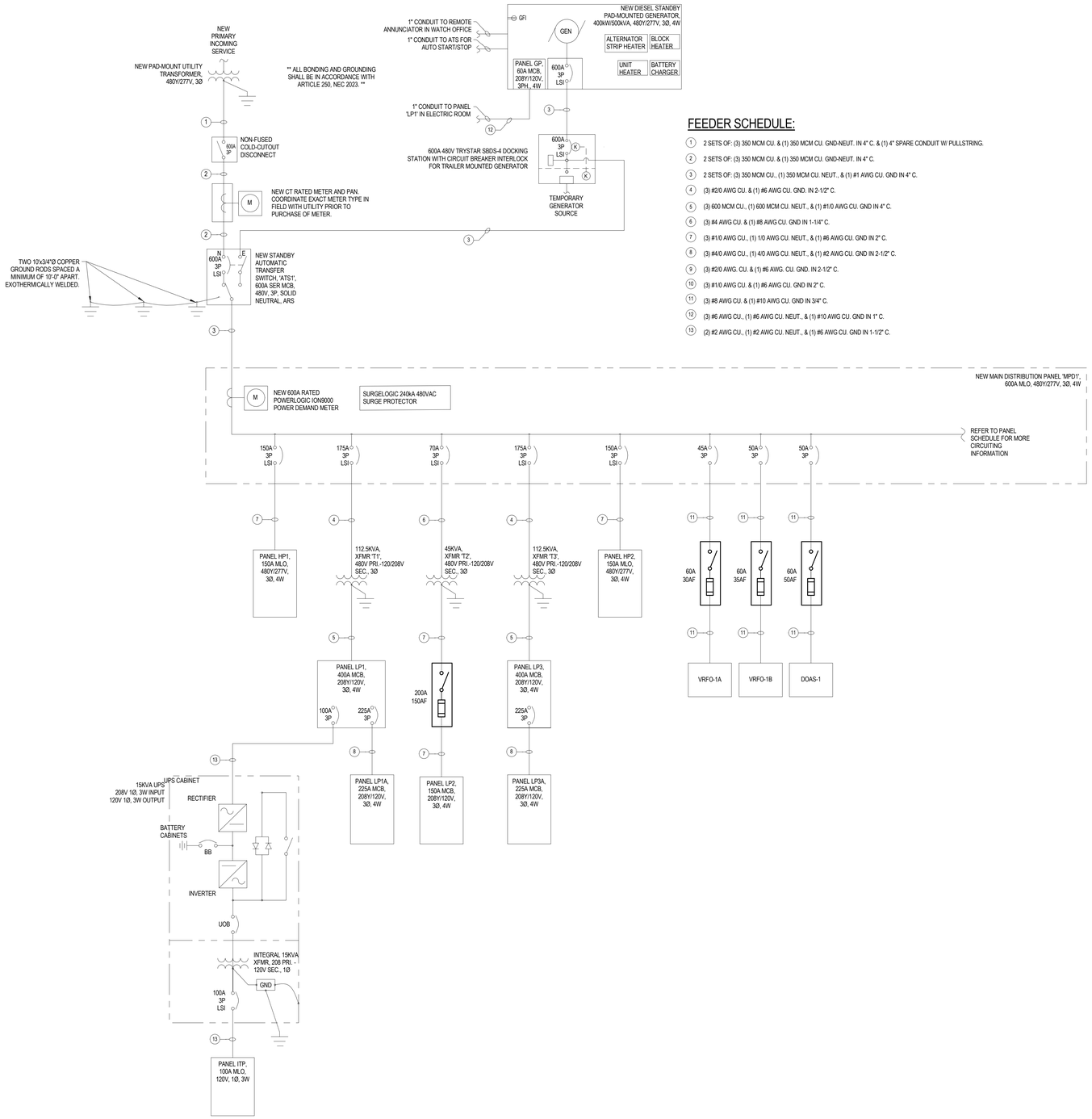

FEEDER SCHEDULE:

1. 2 SETS OF: (3) 350 MCM CU. & (1) 350 MCM CU. GND-NEUT. IN 4" C. & (1) 4" SPARE CONDUIT W/ PULLSTRING.
2. 2 SETS OF: (3) 350 MCM CU. & (1) 350 MCM CU. GND-NEUT. IN 4" C.
3. 2 SETS OF: (3) 350 MCM CU., (1) 350 MCM CU. NEUT., & (1) #1 AWG CU. GND IN 4" C.
4. (3) #2/0 AWG CU. & (1) #6 AWG CU. GND. IN 2-1/2" C.
5. (3) 600 MCM CU., (1) 600 MCM CU. NEUT., & (1) #1/0 AWG CU. GND IN 4" C.
6. (3) #4 AWG CU. & (1) #8 AWG CU. GND IN 1-1/4" C.
7. (3) #1/0 AWG CU., (1) 1/0 AWG CU. NEUT., & (1) #6 AWG CU. GND IN 2" C.
8. (3) #4/0 AWG CU., (1) 4/0 AWG CU. NEUT., & (1) #2 AWG CU. GND IN 2-1/2" C.
9. (3) #2/0 AWG. CU. & (1) #6 AWG. CU. GND. IN 2-1/2" C.
10. (3) #1/0 AWG CU. & (1) #6 AWG CU. GND IN 2" C.
11. (3) #8 AWG CU. & (1) #10 AWG CU. GND IN 3/4" C.
12. (3) #6 AWG CU., (1) #6 AWG CU. NEUT., & (1) #10 AWG CU. GND IN 1" C.
13. (2) #2 AWG CU., (1) #2 AWG CU. NEUT., & (1) #6 AWG CU. GND IN 1-1/2" C.

1 ELECTRICAL SINGLE LINE DIAGRAM
NOT TO SCALE

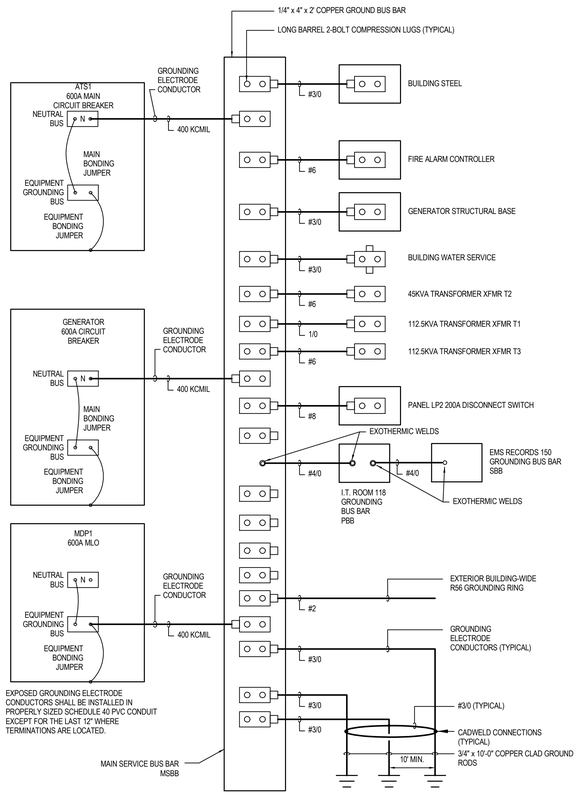

2 MAIN ELECTRICAL SERVICE GROUND BUSBAR DETAIL (MSBB)
NOT TO SCALE

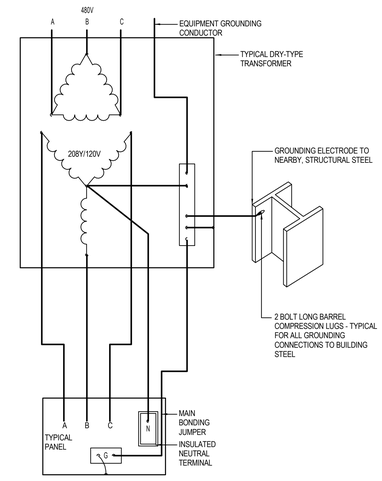

TYPICAL TRANSFORMER AND PANEL GROUNDING DETAIL
SCALE: N.T.S.

NOTE: PROVIDE DEDICATED GROUNDING TO ALL EQUIPMENT (MEDICAL, MECHANICAL, ETC) AND SYSTEMS AS REQUIRED BY NEC AND EQUIPMENT MANUFACTURER.

3 TYPICAL TRANSFORMER AND PANEL GROUNDING DETAIL
NOT TO SCALE

ALL DRAWINGS ARE PROTECTED BY FEDERAL COPYRIGHT BY MANNS WOODWARD STUDIOS, INC. AND CAN NOT BE REPRODUCED OR MODIFIED IN ANY MANNER WITHOUT WRITTEN PERMISSION. DOCUMENTS MAY NOT BE USED IN PART OR WHOLE TO DEVELOP THE DESIGN OF ANOTHER BUILDING WITHOUT EXPRESS WRITTEN PERMISSION BY MANNS WOODWARD STUDIOS.

MW STUDIOS
ARCHITECTURE + MASTER PLANNING
8098 SANDPIPER CIR, SUITE H
NOTTINGHAM, MD 21236
☎ 410-344-1460
✉ INFO@MWSARCH.COM
WWW.MWSARCH.COM

CONSULTANT:

DEDC
ENGINEERING | DESIGN | CONSULTING
Delaware
212 S. Chapel Street
Newark, DE 19711
Phone
302.738.7172
Fax
302.738.7173
www.dedc-eng.com
Pennsylvania
Donna Morris Plaza
30 S. 17th Street
Suite 820
Philadelphia, PA 19103
Phone
267.804.7286

SEAL:

COMMONWEALTH OF PENNSYLVANIA
REGISTERED PROFESSIONAL
SCOTT W. FRENCH
ENGINEER
PE084124

EXETER TOWNSHIP
EMERGENCY SERVICES FACILITY
70 GIBRALTAR ROAD
READING PA 19606

PROJECT NUMBER: 25-049

SUBMISSION:
BID SET

ORIGINAL ISSUE DATE:
10/01/2026

SHEET REVISION SCHEDULE:
No. DATE

ELECTRICAL SINGLE LINE DIAGRAM & DETAILS

SHEET NUMBER:
E601

10/1/2026 12:13:41 PM

LIGHTING FIXTURE SCHEDULE (PROJECT)

TYPE	WATTS	VOLTS	LAMP TYPE	KELVIN TEMP	MANUFACTURER/MODEL (OR APPROVED EQUAL)	DESCRIPTION	REMARKS
A1	35W	277V	LED	3500 K	ELITE / 22-OAT1-LED-2000L/3000L/4000L-DIM10-120-MVOLT-30K/35K/40K-85	2'x2' ARCHITECTURAL ARCHITECTURAL VOLUMETRIC SHALLOW RECESSED LED TROFFER FIXTURE, ROLLED STEEL BODY, WHITE FINISH, 0-10V ELECTRONIC DIMMING DRIVER	
A1 EM	35W	277V	LED	3500 K	ELITE / 22-OAT1-LED-2000L/3000L/4000L-DIM10-120-MVOLT-30K/35K/40K-85-0-EMG-LED-10W	2'x2' ARCHITECTURAL ARCHITECTURAL VOLUMETRIC SHALLOW RECESSED LED TROFFER FIXTURE, ROLLED STEEL BODY, WHITE FINISH, 0-10V ELECTRONIC DIMMING DRIVER	ALL FIXTURES MARKED 'EM' SHALL BE PROVIDED WITH 90 MINUTE MINIMUM INTEGRATED EMERGENCY BATTERY BACKUP.
B1	40W	277V	LED	3500 K	ELITE / OLS-DI-LED-2-S-4'-D750L-US00L-BW-1C-DIM10-MVOLT-35K-90-WH	4' ARCHITECTURAL SUSPENDED LINEAR FIXTURE, ALUMINUM HOUSING, ACRYLIC LENS, 0-10V ELECTRONIC DIMMING DRIVER	
B2	26W	277V	LED	3500 K	ELITE / OLS-R-LED-4-TB-3G-S-4'-750L-DIM10-MVOLT-3500K-90-WH	4' LINEAR LAY-IN LUMINAIRE, WHITE FINISH, 0-10V ELECTRONIC DIMMING DRIVER, 4" FLUSH LENS	
C1	18W	277V	LED	3500 K	ELITE / HH4-1500L-DIM10-MVOLT-MWD-35K-90-HH4-4501-XX-XX-XX	4' ROUND DOWNLIGHT, ALUMINUM DIE-CAST BODY AND TRIM, 0-10V ELECTRONIC DIMMING DRIVER	
C1 EM	18W	277V	LED	3500 K	ELITE / HH4-1500L-DIM10-MVOLT-MWD-35K-90-EMG-LED-10W-HH4-4501-XX-XX-XX	4" ROUND DOWNLIGHT, ALUMINUM DIE-CAST BODY AND TRIM, 0-10V ELECTRONIC DIMMING DRIVER	ALL FIXTURES MARKED 'EM' SHALL BE PROVIDED WITH 90 MINUTE MINIMUM INTEGRATED EMERGENCY BATTERY BACKUP.
D1	15W	277V	LED	3500 K	ELITE / SCH6-LED-PM-1500L-DIM10-MVOLT-MD-35K-90+-BK--HH6-6501	6' ROUND CYLINDER PENDANT, SUSPENDED MOUNT, MEDIUM DISTRIBUTION, ALUMINUM HOUSING, SOFT FOCUS CANOPY	
EX1	3W	277V	LED		EVENLITE / SOVII-EM-G-1M-BA-SU-XX-IR	SINGLE FACE UNIVERSAL MOUNT EXIT SIGN, ALUMINUM HOUSING,BRUSHED ALUMINUM FINISH, ACRYLIC BODY WITH MIRROR FINISH, GREEN LETTERS, CHEVERONS AS NECESSARY, 90 MINUTE MINIMUM EMERGENCY BACKUP BATTERY	EXIT SIGNS SHALL BE MOUNTED CENTERED OVER EGRESS DOORS.
EX2	3W	277V	LED		EVENLITE / TWL-EM-G-1U-W-SD-TP	SINGLE FACE WET LOCATION EXIT SIGN, THERMOPLASTIC HOUSING, GREEN LETTERS, CHEVERONS AS NECESSARY, 90 MINUTE MINIMUM EMERGENCY BACKUP BATTERY	EXIT SIGNS SHALL BE MOUNTED CENTERED OVER EGRESS DOORS.
F1	4.4W/FT	24VDC	LED	2700 K	TARGETTI / DL-ED-44-I-27-HC024-A-DL-ALUM-U-8-DELI901241CPWM	36 LED/FT TAPELIGHT, FACTORY PREPPED ENDS, REMOTE POWER SUPPLY, ALUMINUM MOUNTING CHANNEL, FIELD CUTTABLE	E.C. SHALL TAKE-OFF ALL LENGTHS OF TAPELIGHT FROM DRAWINGS AND SHALL CONFIRM LENGTHS IN FIELD WITH ACTUAL LIGHT FIXTURE LOCATION DIMENSIONS. E.C. TO PROVIDE ADEQUATE NUMBER OF DRIVERS FOR TAPELIGHT OPERATION. E.C. SHALL MOUNT TAPELIGHT ON TOE KICK OF LOCKERS. E.C. SHALL COORDINATE INTERCONNECTION OF WIRING WITH FIRE ALARM ALERTING SYSTEM.
F2	4.4W/FT	24VDC	LED	3500 K	TARGETTI / DL-ED-44-I-27-HC024-A-DL-ALUM-U-8-DELI901241CPWM	36 LED/FT TAPELIGHT, FACTORY PREPPED ENDS, REMOTE POWER SUPPLY, ALUMINUM MOUNTING CHANNEL, FIELD CUTTABLE	E.C. SHALL TAKE-OFF ALL LENGTHS OF TAPELIGHT FROM DRAWINGS AND SHALL CONFIRM LENGTHS IN FIELD WITH ACTUAL LIGHT FIXTURE LOCATION DIMENSIONS. E.C. TO PROVIDE ADEQUATE NUMBER OF DRIVERS FOR TAPELIGHT OPERATION. E.C. SHALL MOUNT TAPELIGHT BELOW CABINETS AS REQUIRED. E.C. SHALL COORDINATE EXACT MOUNTING LOCATION WITH MILLWORK AND ARCHITECTURAL DRAWINGS.
G1	176W	277V	LED	3500 K	ILP / EDV4-24L-U-35-FRL-UP/2L-AC10Y	1.5'x4' HIGHBAY LED FIXTURE, CAST ALUMINUM HOUSING, IMPACT RESISTANT FROSTED ACRYLIC LENS, WHITE FINISH, SUSPENDED CABLE MOUNT, 0-10V ELECTRONIC DIMMING DRIVER	FIXTURE SHALL BE MOUNTED AT 19'-0" A.F.F. AS MEASURED TO BOTTOM OF FIXTURE. E.C. SHALL COORDINATE ALL HEIGHTS IN FIELD WITH OWNER/OWNER'S ONSITE REPRESENTATIVE.
G1 EM	82W	277V	LED	3500 K	ILP / EDV4-24L-U-35-FRL-UP/2L-AC10YL-EM20	1.5'x4' HIGHBAY LED FIXTURE, CAST ALUMINUM HOUSING, IMPACT RESISTANT FROSTED ACRYLIC LENS, WHITE FINISH, SUSPENDED CABLE MOUNT, 0-10V ELECTRONIC DIMMING DRIVER	FIXTURE SHALL BE MOUNTED AT 19'-0" A.F.F. AS MEASURED TO BOTTOM OF FIXTURE. E.C. SHALL COORDINATE ALL HEIGHTS IN FIELD WITH OWNER/OWNER'S ONSITE REPRESENTATIVE.
H1	38W	277V	LED	3500 K	ILP / WTZ4-SL-U-40-RAFL-SS-ACxL/SS	4' LINEAR FULLY ENCLOSED AND GASKETED FIXTURE, FIBERGLASS HOUSING, ELECTRONIC DRIVER, SHALLOW POLYCARBONATE CLEAR LENS, WET LOCATION LISTED, -40ºF COLD START DRIVER, STAINLESS STEEL LATCHE	
H1 EM	38W	277V	LED	4000 K	ILP / WTZ4-SL-U-40-RAFL-SS-ACxL/SS-EM12	4' LINEAR FULLY ENCLOSED AND GASKETED FIXTURE, WHITE FINISH, ELECTRONIC DRIVER, RIBBED FROSTED ACRYLIC LENS, WET LOCATION LISTED, EMERGENCY BATTERY BACKUP	ALL FIXTURES MARKED 'EM' SHALL BE PROVIDED WITH 90 MINUTE MINIMUM INTEGRATED EMERGENCY BATTERY BACKUP.
J1	54W	277V	LED	3500 K	HIGHSLED / HLLX-4-V-T-8-W-T-7-CB-AE	4' LINEAR WALL MOUNTED FIXTURE, WHITE FINISH, OPAL LENS, 0-10V ELECTRONIC DIMMING DRIVER, IP67 RATED	
K1	40W	277V	LED	3500 K	FIXTURE TO BE SELECTED BY ARCHITECT	LINEAR PENDANT MOUNTED FIXTURE	
L1	12W	277V	LED	3000 K	ABOVE ALL LIGHTING / SMWL-12-SW-1-RM-BZ-M-D	EXTERIOR SLIM RECESSED STEP AND WALL LIGHT, ALUMINUM HOUSING, TEMPERED GLASS LENS, 0-10V ELECTRONIC DIMMING DRIVER	
L2	4W	277V	LED	3000 K	WAC / WL-LED200F-30-65-BK	SLIM RECESSED STEP AND WALL LIGHT, ALUMINUM HOUSING, LOW PROFILE, IP67 RATED, 0-10V ELECTRONIC DIMMING DRIVER	
M1	27W	277V	LED	3000 K	LIGMAN / ULH-10665-27W-W30-01-120/277V-GFCI-DIM	42" TALL ROUND BOLLARD LIGHT, BLACK FINISH, MARINE GRADE ALUMINUM HOUSING, POWDER COAT PAINT FINISH, IP66 RATED, WET LOCATION LISTED ELECTRONIC DRIVER	
N1	10W	277V	LED	3000 K	VISTA PRO / 1182-SS-SS-NS-30-C-DV-CX-ND-834-T010	IN GROUND LED SPOT LIGHT, STAINLESS STEEL HOUSING, DRIVE OVER GRADE, NARROW SPOT, CLEAR POLYMER LENS, IP68 RATED, 10 DEGREE TILT OPTIC.	E.C. SHALL PROVIDE (3) AIMINGS PER FIXTURE.
P1	171W	277V	LED	3000 K	NLS LIGHTING / NV-2-13-80L-7-30K8-UNV-ASA-BRZ-BS-MGF-HSS-GL	SINGLE LUMINARE ROADWAY POLE LIGHT FIXTURE, DIE CAST ALUMINUM, MARINE GRADE BRONZE FINISH, TEMPERED GLASS LENS, HOUSE SIDE SHIELD. 0-10V ELECTRONIC DIMMING DRIVER	FIXTURE SHALL BE MOUNTED ONTO 4" ROUND STEEL POLE MODEL #SSSP-22-4R-7G-12BC-SGL-BRZ-136-MGF-UL-PROV AS MANUFACTURED BY NLS LIGHTING WITH A MOUNTING CONFIGURATION OF 'SGL'.
P2	171W	277V	LED	3000 K	NLS LIGHTING / NV-2-T4FTW-80L-7-30K8-UNV-ASA-BRZ-BS-MGF-HSS-GL	SINGLE LUMINARE ROADWAY POLE LIGHT FIXTURE, DIE CAST ALUMINUM, MARINE GRADE BRONZE FINISH, TEMPERED GLASS LENS, HOUSE SIDE SHIELD. 0-10V ELECTRONIC DIMMING DRIVER	FIXTURE SHALL BE MOUNTED ONTO 4" ROUND STEEL POLE MODEL #SSSP-22-4R-7G-12BC-SGL-BRZ-136-MGF-UL-PROV AS MANUFACTURED BY NLS LIGHTING WITH A MOUNTING CONFIGURATION OF 'SGL'.
Q1 EM	21W	277V	LED	3000 K	NLS LIGHTING / VSR-S-T2-16L-40-30K8-UNV-CM-BRZ-MGF	CEILING MOUNTED CANOPY LIGHT FIXTURE, LOW PROFILE. SPUN ALUMINUM, MARINE GRADE BRONZE FINISH	ALL FIXTURES MARKED 'EM' SHALL BE PROVIDED WITH 90 MINUTE MINIMUM INTEGRATED EMERGENCY BATTERY BACKUP.
R1	5W	277V	LED	3500 K	ELITE / FG-L2A-3-35-90 ELITE / FG-RTL2-4 48V GROOVE TRACK	ELITE 48V GROOVE TRACK SYSTEM WITH DIFFUSED 3" ADJUSTABLE TRACK LIGHT	TRACK LIGHTS SHALL BE SPACED 12" ON CENTER FROM EACH OTHER ON GROOVE TRACK. E.C. SHALL COORDINATE EXACT LOCATIONS AND AIMINGS WITH OWNER'S REPRESENTATIVE AND ARCHITECTURAL DRAWINGS PRIOR TO COMMENCEMENT OF NEW WORK.
S1	60W	277V	LED	3000 K	METEOR / LA6-60-309-RGB-UNV-DMX-40-40-BLK-OUT-WW	RGB IP65 RATED WALL CYLINDER DIRECT/INDIRECT LIGHT FIXTURE	
T1	6W/FT	24VDC	LED	3000 K	TARGETTI / DL-PX-60-O-RGBW-24-A-DL-ALUM-U-8-DELI901241CPWM	RGBW EXTERIOR 18 LED/FT TAPELIGHT, FACTORY PREPPED ENDS, REMOTE POWER SUPPLY, ALUMINUM MOUNTING CHANNEL, FIELD CUTTABLE, IP65 WEATHERPROOF	E.C. SHALL TAKE-OFF ALL LENGTHS OF TAPELIGHT FROM DRAWINGS AND SHALL CONFIRM LENGTHS IN FIELD WITH ACTUAL LIGHT FIXTURE LOCATION DIMENSIONS. E.C. TO PROVIDE ADEQUATE NUMBER OF DRIVERS FOR TAPELIGHT OPERATION. E.C. SHALL MOUNT TAPELIGHT BELOW SOFFIT. E.C. SHALL COORDINATE EXACT MOUNTING TYPE AND LOCATION WITH OWNER'S REPRESENTATIVE PRIOR TO COMMENCEMENT OF NEW WORK.
V1	26W	277V	LED	3000 K	TARGETTI / SOL-CC-FE-L2-ZM-30	ADJUSTABLE FLOODLIGHT PROJECTOR, ANODIZED DIE-CAST ALUMINUM, IP68	E.C. SHALL PROVIDE (3) AIMINGS PER FIXTURE.
W1 EM	37W	277V	LED	3000 K	NLS LIGHTING / NV-2-12-16L-7-30K8-UNV-WM-BRZ-MGF-GL-EM8	SINGLE LUMINARE FULL CUTOFF WALL PACK, DIE-CAST ALUMINUM HOUSING, BRONZE FINISH, OUTDOOR RATED, ONE-PIECE GASKET, IMPACT RESISTANT GLASS LENS, 90 MINUTE MINIMUM EMERGENCY BACKUP BATTERY.	ALL FIXTURES MARKED 'EM' SHALL BE PROVIDED WITH 90 MINUTE MINIMUM INTEGRATED EMERGENCY BATTERY BACKUP.
W2	136	277V	LED	3000 K	NLS LIGHTING / NV-2-T4FTW-64L-7-30K8-UNV-WM-BRZ-MGF-GL	SINGLE LUMINARE FULL CUTOFF WALL PACK, DIE-CAST ALUMINUM HOUSING, BRONZE FINISH, OUTDOOR RATED, ONE-PIECE GASKET, IMPACT RESISTANT GLASS LENS, 90 MINUTE MINIMUM EMERGENCY BACKUP BATTERY.	ALL FIXTURES MARKED 'EM' SHALL BE PROVIDED WITH 90 MINUTE MINIMUM INTEGRATED EMERGENCY BATTERY BACKUP.
X1	33.6W	277V	LED	3500 K	COLOR KINETICS / 423-000035-30	EXTERIOR RATED COMPACT RGBW 4' LINEAR LUMINAIRE, ANODIZED ALUMINUM	
Y1	116W	277V	LED	3500 K	FLUXWERX / VU1-R-A-C-35-S-XX-S-E1-M-03	12'-0" DECORATIVE LINEAR LED PENDANT FIXTURE, BLACK FINISH, CLEAR ACRYLIC LENS, I-BEAM DESIGN, REMOTE 0-10V ELECTRONIC DIMMING DRIVER, AIRCRAFT CABLE HUNG	E.C. SHALL MOUNT FIXTURE AT 6'-0" A.F.F. AS MEASURED TO BOTTOM OF FIXTURE. E.C. SHALL COORDINATE EXACT MOUNTING HEIGHT IN FIELD WITH CONFERENCE ROOM TABLE AND ARCHITECTURAL DRAWINGS PRIOR TO INSTALLATION OF FIXTURE.

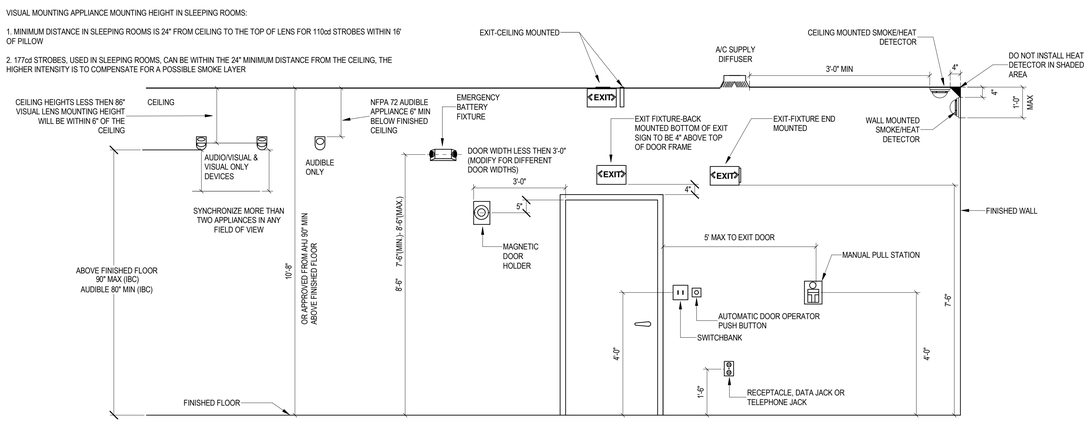

1 TYPICAL MOUNTING HEIGHTS
NOT TO SCALE

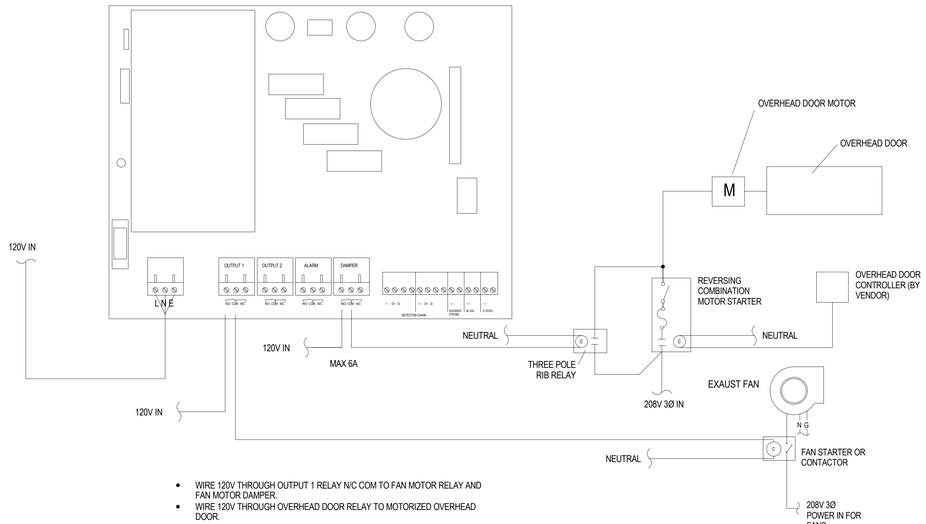

- WIRE 120V THROUGH OUTPUT 1 RELAY N/C COM TO FAN MOTOR RELAY AND FAN MOTOR DAMPER.
- WIRE 120V THROUGH OVERHEAD DOOR RELAY TO MOTORIZED OVERHEAD DOOR.
- RELAYS MAX 6A
- SET "DAMPER" OUTPUT TO CHANGE STATE AT SAME TIME AS OUTPUT 1
- COORDINATE ALL CONNECTIONS AND EQUIPMENT REQUIREMENTS WITH OVERHEAD DOOR VENDOR PRIOR TO INSTALLATION.

4 PARKSAFE SYSTEM WIRING DIAGRAM
NOT TO SCALE

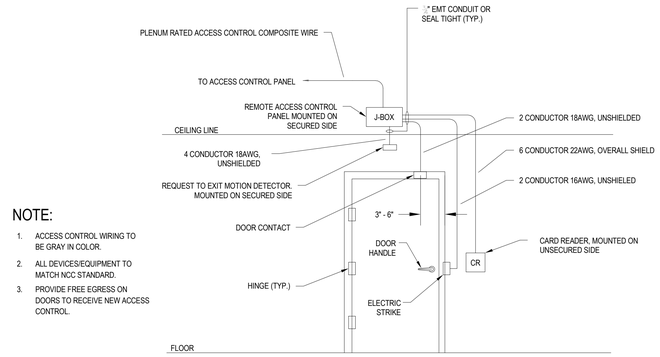

NOTE:
1. ACCESS CONTROL WIRING TO BE GRAY IN COLOR.
2. ALL DEVICES/EQUIPMENT TO MATCH NCC STANDARD.
3. PROVIDE FREE EGRESS ON DOORS TO RECEIVE NEW ACCESS CONTROL.

5 DOOR ACCESS CONTROL DIAGRAM
NOT TO SCALE

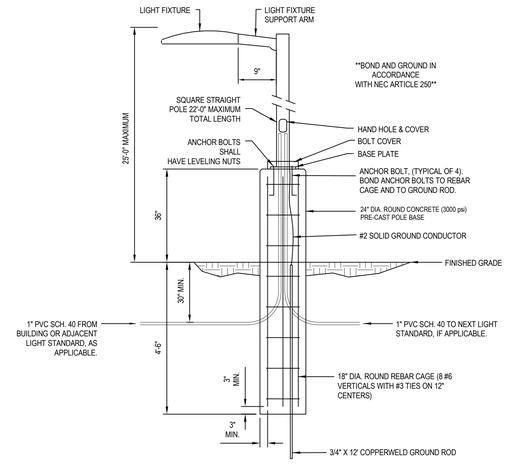

2 POLE LIGHT DETAIL (TYP)
NOT TO SCALE

ALL DRAWINGS ARE PROTECTED BY FEDERAL COPYRIGHT BY MANNS WOODWARD STUDIOS, INC. AND CAN NOT BE REPRODUCED OR MODIFIED IN ANY MANNER WITHOUT WRITTEN PERMISSION. DOCUMENTS MAY NOT BE USED IN PART OR WHOLE TO DEVELOP THE DESIGN OF ANOTHER BUILDING WITHOUT EXPRESS WRITTEN PERMISSION BY MANNS WOODWARD STUDIOS.

MW STUDIOS
ARCHITECTURE + MASTER PLANNING
8098 SANDPIPER CIR, SUITE H
NOTTINGHAM, MD 21236
410-344-1460
INFO@MWSARCH.COM
WWW.MWSARCH.COM

CONSULTANT:

DEDC
ENGINEERING | DESIGN | CONSULTING
Delaware
212 S. Chapel Street
Newark, DE 19711
Phone
302.738.7172
Fax
302.738.7173
www.dedc-eng.com
Pennsylvania
Drums Morris Plaza
30 S. 17th Street
Suite 820
Philadelphia, PA 19103
Phone
267.804.7286

SEAL:

COMMONWEALTH OF PENNSYLVANIA
REGISTERED PROFESSIONAL
SCOTTIN FRENCH
ENGINEER
PE094132
PENNSYLVANIA

EXETER TOWNSHIP
EMERGENCY SERVICES FACILITY
70 GIBRALTAR ROAD
READING PA 19606

PROJECT NUMBER: 25-049

SUBMISSION:
BID SET

ORIGINAL ISSUE DATE:
10/01/2026

SHEET REVISION SCHEDULE:
No. DATE

LIGHTING FIXTURE SCHEDULE AND DETAILS

SHEET NUMBER:
E602

10/1/2026 12:13:41 PM

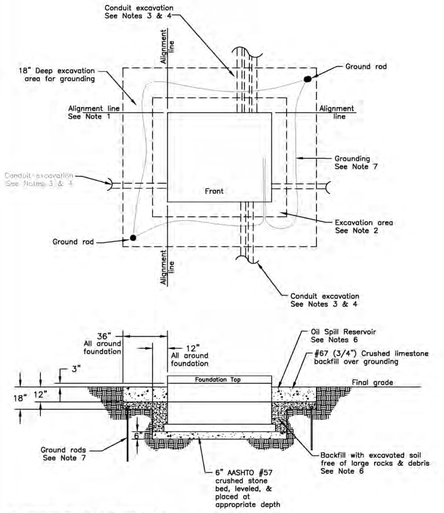

For dimensions see Exhibit 25 page 2 of 4.
For Notes see Exhibit 25 pages 3 & 4.

Three–Phase Transformer
Pre–Cast Concrete Foundation / Vault
(Installation Details)
Page 1 of 4

FirstEnergy.
Service Guide | REV. 1
EXHIBIT 25 | DATE 7/21

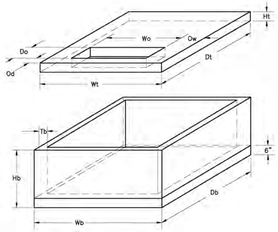

Pre–Cast Concrete Transformer Foundation Dimensions

Transformer Size (kVA)	Found. Code	Base Wb	Db	Hb	Tb	WT.	Top Wt	Dt	Ht	WT.	Opening in Top Wo	Do	Ow	Od
22,940 GrdY/14,400 Volt & Below														
45 – 150	J1	72"	54"	42"	4"	4,275#	72"	54"	6"	1,725#	55"	14"	8.5"	6"
225 – 1000	J2	78"	66"	42"	4"	8,000#	78"	66"	6"	2,400#	60"	19"	9"	6"
1500 – 2500	J3	96"	96"	42"	6"	12,000#	96"	96"	9"	6,400#	60"	19"	18"	9"
1500 – 2500 (Note 7)	J4	96"	96"	54"	6"	14,000#	96"	96"	9"	6,400#	60"	19"	18"	9"
34,500 GrdY/19,920 Volt														
1500 – 2500	J3	96"	96"	42"	6"	12,000#	96"	96"	9"	6,400#	60"	19"	18"	9"
1500 – 2500 (Note 7)	J4	96"	96"	54"	6"	14,000#	96"	96"	9"	6,400#	60"	19"	18"	9"
34,500 Delta Volt Live–Front (includes CEI 36 kV System)														
All Sizes (Note 8)	J5	138"	120"	54"	6"	24,655#	138"	120"	9"	10,270#	102"	36"	18"	18"

Pre–Cast Concrete Transformer Foundation – Excavation Dimensions

Transformer Size (kVA)	Found. Code	Width	Depth	Height	Stone Base
22,940 GrdY/14,400 Volt & Below					
45 – 150	J1	96"	78"	45"	6"
225 – 1000	J2	102"	90"	45"	6"
1500 – 2500	J3	120"	120"	45"	6"
1500 – 2500 (Note 7)	J4	120"	120"	57"	6"
34,500 GrdY/19,920 Volt					
1500 – 2500	J3	120"	120"	45"	6"
1500 – 2500 (Note 7)	J4	120"	120"	57"	6"
34,500 Delta Volt Live–Front (includes CEI 36 kV System)					
All Sizes (Note 8)	J5	162"	144"	57"	6"

Three–Phase Transformer
Pre–Cast Concrete Foundation / Vault
(Fabrication Details)
Page 2 of 4

FirstEnergy.
Service Guide | REV. 1
EXHIBIT 25 | DATE 7/21

1 TRANSFORMER VAULT DETAIL
NOT TO SCALE

GreenMAX DRC Wired for Multi-Zone, Typical

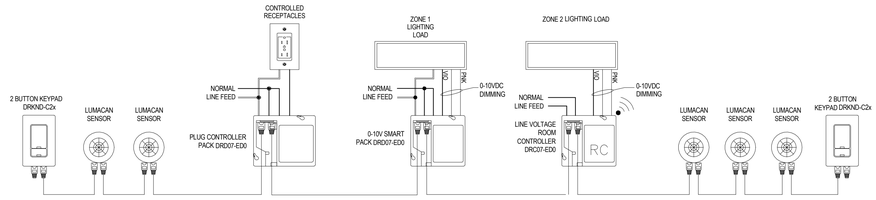

GreenMAX DRC Wired for Single-Zone, Typical

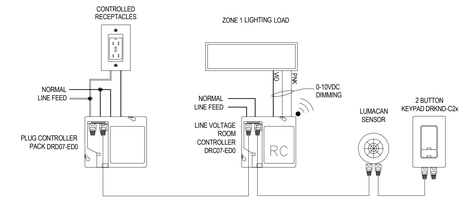

2 LEVITON ROOM CONTROLLER WIRING DIAGRAMS
NOT TO SCALE

MCB INTERIOR



MASTER CONTROL BOX
TO BE LOCATED IN
WATCH OFFICE

E.C. SHALL FURNISH AND INSTALL
MASTER CONTROL BOX AND
PROVIDE (1) 120V 20A CIRCUIT
FOR OPERATION.

E.C. SHALL COORDINATE ALL
EXACT QUANTITIES AND
LOCATIONS WITH OVERHEAD
DOOR VENDOR AND CONTROLS
VENDOR PRIOR TO
COMMENCEMENT OF NEW WORK.

OPEN/CLOSE WIRING DIAGRAM

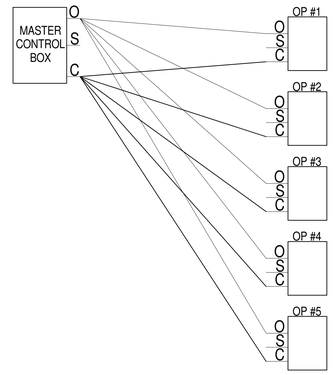

STOP BUTTON WIRING DIAGRAM

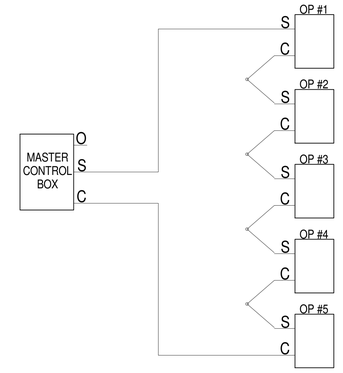

3 OVERHEAD DOOR CONTROL WIRING DIAGRAM (TYPICAL)
NOT TO SCALE

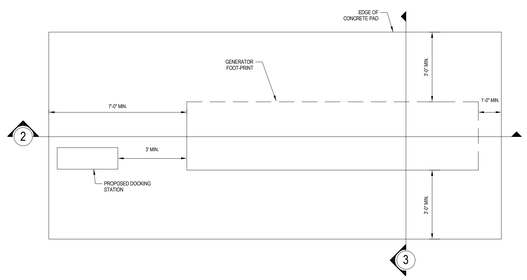

1 TOP VIEW
N.T.S.

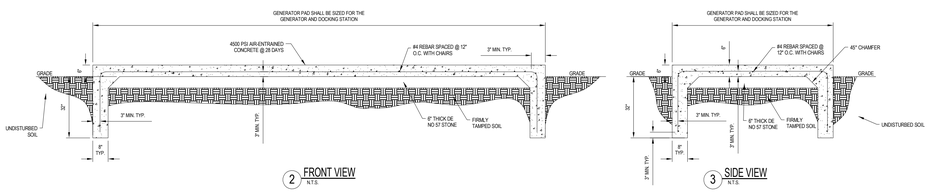

2 FRONT VIEW
N.T.S.

3 SIDE VIEW
N.T.S.

4 GENERATOR PAD DETAILS
NOT TO SCALE

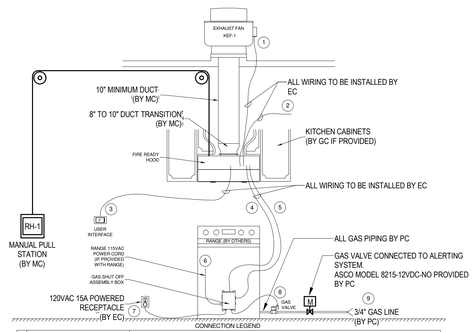

ID	ITEM	ITEM DETAILS
1	FAN	FIELD TO CONNECT FAN KEF-1 TO QC2, PROVIDED WITH 0-10VDC SPEED REFERENCE AND 115VAC RUN COMMAND.
2	HOOD POWER	FIELD TO PROVIDE 115VAC POWER FROM 15A BREAKER TO TERMINAL BLOCKS H1 AND N1 INSIDE HOOD (GROUND TO GROUNDING TERMINAL).
3	SHIP LOOSE USER INTERFACE	8.5 FT PLUG AN PLAY CABLE WITH LIGHT BLUE LABEL COILED UP AND ATTACHED TO HOOD. FIELD TO CONNECT PLUG TO BACK OF USER INTERFACE INSIDE INTERFACE J-BOX.
4	GAS/ELECTRIC DISCONNECT CABLE 1	10 FT PLUG AND PLAY CABLE COILED UP AND ATTACHED TO 9PIN CONNECTION AT HOOD. FIELD TO PLUG THIS INTO GAS/ELECTRIC SHUT OFF ASSEMBLY BOX.
5	GAS/ELECTRIC DISCONNECT CABLE 2	10 FT PLUG AND PLAY CABLE COILED UP AND ATTACHED TO 4PIN CONNECTION AT HOOD. FIELD TO PLUG THIS INTO GAS/ELECTRIC SHUT OFF ASSEMBLY BOX.
6	RANGE POWER CORD	PLUG RANGE POWER CORD (IF PROVIDED WITH RANGE) INTO GAS SHUT OFF ASSEMBLY BOX.
7	SHUT OFF ASSEMBLY BOX POWER	PLUG GAS SHUT OFF ASSEMBLY BOX POWER CORD INTO NEARBY 115VAC RECEPTACLE.
8	SHUT OFF ASSEMBLY VALVE POWER	GAS VALVE TO CONNECT TO QUICK CONNECTOR, CONNECTS 5FT GAS VALVE POWER CORD TO 1.5FT CABLE ON GAS VALVE.
9	GAS LINE	PIPE GAS LINE INTO GAS VALVE INLET, THEN OUT OF GAS VALVE OUTLET TO RANGE.

5 KITCHEN HOOD/KEF-1 INSTALLATION DETAIL
NOT TO SCALE

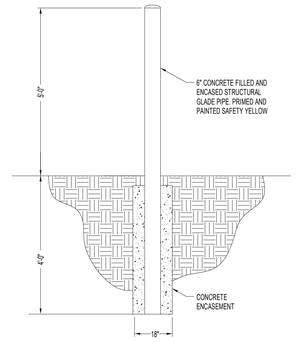

6 BOLLARD DETAIL
NOT TO SCALE

ALL DRAWINGS ARE PROTECTED BY FEDERAL COPYRIGHT BY MANNS WOODWARD STUDIOS, INC. AND CAN NOT BE REPRODUCED OR MODIFIED IN ANY MANNER WITHOUT WRITTEN PERMISSION. DOCUMENTS MAY NOT BE USED IN PART OR WHOLE TO DEVELOP THE DESIGN OF ANOTHER BUILDING WITHOUT EXPRESS WRITTEN PERMISSION BY MANNS WOODWARD STUDIOS.

MW STUDIOS
ARCHITECTURE + MASTER PLANNING
8098 SANDPIPER CIR, SUITE H
NOTTINGHAM, MD 21236
410-344-1460
INFO@MWSARCH.COM
WWW.MWSARCH.COM

CONSULTANT:

DEDC
ENGINEERING | DESIGN | CONSULTING
Delaware
212 S. Chapel Street
Newark, DE 19711
Phone
302.738.7172
Fax
302.738.7175
www.dedc-eng.com
Pennsylvania
Donna Morris Plaza
30 S. 17th Street
Suite 820
Philadelphia, PA 19103
Phone
267.804.7286

SEAL:



EXETER TOWNSHIP
EMERGENCY SERVICES FACILITY
70 GIBRALTAR ROAD
READING PA 19606

PROJECT NUMBER: 25-049

SUBMISSION:
BID SET

ORIGINAL ISSUE DATE:
10/01/2026

SHEET REVISION SCHEDULE:
No. DATE

ELECTRICAL DETAILS

SHEET NUMBER:
E603

10/1/2026 12:13:42 PM

LIGHTING CONTROL NOTES:

1. DIGITAL TIME CLOCK SHALL BE TORK #DGLC200A-NC WITH PHOTOCELL #EPC-A INCLUDED.
2. PROVIDE NEMA 1 ENCLOSURE. E.C. SHALL FURNISH AND INSTALL PHOTOCELL DEVICE WITH DIGITAL TIMECLOCK ON NORTHEAST CORNER OF BUILDING'S ROOF. E.C. SHALL INSTALL PHOTOCELL SO OPERATION IS NOT INHIBITED DUE TO ADJACENT LIGHTING SOURCES IN THE AREA.
3. INSTALL SYSTEM PER MANUFACTURER'S WRITTEN INSTRUCTIONS.
4. LIGHTING CONTACTOR #1 SHALL BE 8903-LG04-V02 AND LIGHTING CONTACTOR #2 SHALL BE 8903-LG04-V02 AS MANUFACTURED BY SQUARE-D OR APPROVED EQUAL
5. ALL EXTERIOR LIGHTING FIXTURES SHALL BE INSTALLED ON A LIGHTING CIRCUIT CONTROLLED BY DIGITAL TIMECLOCK WITH PHOTOCELL FOR AUTOMATIC DUSK TO DAWN OPERATION. LIGHTING CIRCUIT SHALL ALSO BE PROVIDED WITH CONTROLS TO DIM ALL FIXTURES TO 50% OPERATION FOR THE HOURS BETWEEN 10PM AND 7AM OR THE HOURS SPECIFIED AND APPROVED BY THE OWNER.

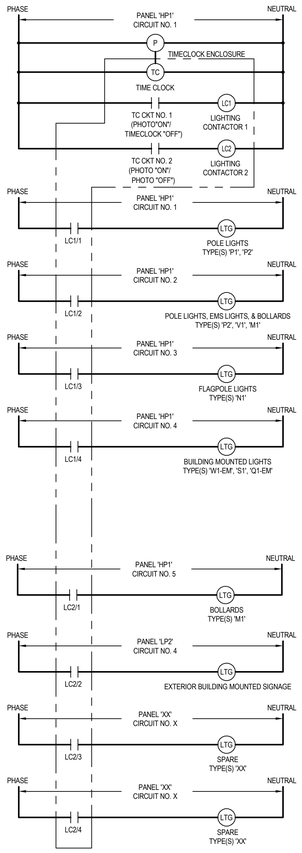

1 EXTERIOR LIGHTING CONTROL WIRING DIAGRAM
NOT TO SCALE

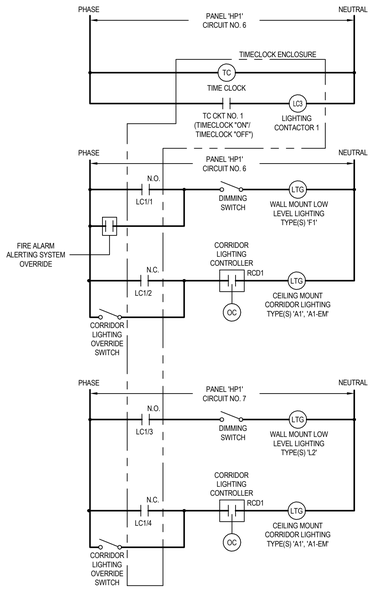

LIGHTING CONTROL NOTES:

1. DIGITAL TIME CLOCK SHALL BE TORK #7200Z PROVIDE NEMA 1 ENCLOSURE. SET TIME CLOCK TIME SETTINGS FOR TYPE 'F1', 'L2', 'A1', 'A1-EM' FIXTURE "LIGHTING ON OPERATING HOURS" TO BE ON FROM 7PM TO 7AM OR THE HOURS SPECIFIED AND APPROVED BY THE OWNER.
2. E.C. SHALL SET TIMECLOCK TO TURN LIGHTS ON AND OFF AS COORDINATED WITH OWNER.
3. INSTALL SYSTEM PER MANUFACTURER'S WRITTEN INSTRUCTIONS.
4. LIGHTING CONTACTOR SHALL BE 8903-LG04-V02 AS MANUFACTURED BY SQUARE-D OR APPROVED EQUAL. CONTACTOR SHALL HAVE N.O./N.C. FOR WIRING BELOW.
5. E.C. SHALL WIRE HALLWAY LIGHTING ROOM CONTROLLERS FEEDING TYPE "A1" FIXTURES TO N.C. SIDE OF CONTACT SO OVERHEAD LIGHTING IS NOT IN USE WHEN LOW-LEVEL LIGHTING IS OPERATING. E.C. SHALL FURNISH AND INSTALL CORRIDOR LIGHTING OVERRIDE SWITCH FOR OVERHEAD LIGHTING CONTROL.
6. E.C. SHALL COORDINATE EXACT INTERCONNECTION OF FIRE ALARM ALERTING OVERRIDE WITH ALERTING CONTRACTOR AND OWNER'S REPRESENTATIVE PRIOR TO COMMENCEMENT OF NEW WORK.

2 INTERIOR BUNK CORRIDOR LOW-LEVEL LIGHTING CONTROL WIRING DIAGRAM
NOT TO SCALE

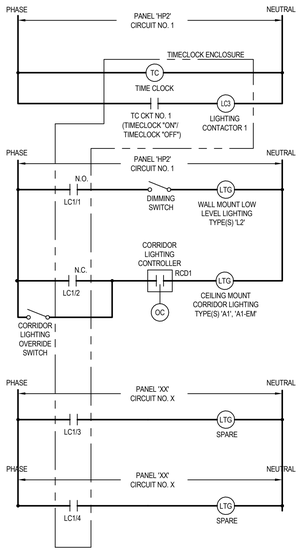

LIGHTING CONTROL NOTES:

1. DIGITAL TIME CLOCK SHALL BE TORK #7200Z PROVIDE NEMA 1 ENCLOSURE. SET TIME CLOCK TIME SETTINGS FOR TYPE 'L2', 'A1', 'A1-EM' FIXTURE "LIGHTING ON OPERATING HOURS" TO BE ON FROM 7PM TO 7AM OR THE HOURS SPECIFIED AND APPROVED BY THE OWNER.
2. E.C. SHALL SET TIMECLOCK TO TURN LIGHTS ON AND OFF AS COORDINATED WITH OWNER.
3. INSTALL SYSTEM PER MANUFACTURER'S WRITTEN INSTRUCTIONS.
4. LIGHTING CONTACTOR SHALL BE 8903-LG04-V02 AS MANUFACTURED BY SQUARE-D OR APPROVED EQUAL. CONTACTOR SHALL HAVE N.O./N.C. FOR WIRING BELOW.
5. E.C. SHALL WIRE HALLWAY LIGHTING ROOM CONTROLLERS FEEDING TYPE "A1" FIXTURES TO N.C. SIDE OF CONTACT SO OVERHEAD LIGHTING IS NOT IN USE WHEN LOW-LEVEL LIGHTING IS OPERATING. E.C. SHALL FURNISH AND INSTALL CORRIDOR LIGHTING OVERRIDE SWITCH FOR OVERHEAD LIGHTING CONTROL.

3 INTERIOR EMS CORRIDOR LOW-LEVEL LIGHTING CONTROL WIRING DIAGRAM
NOT TO SCALE

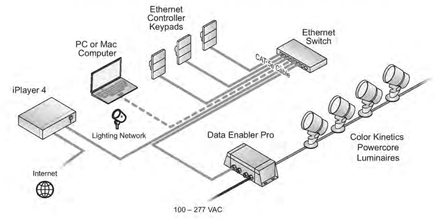

4 RGB CONTROLLER WIRING DIAGRAM
NOT TO SCALE

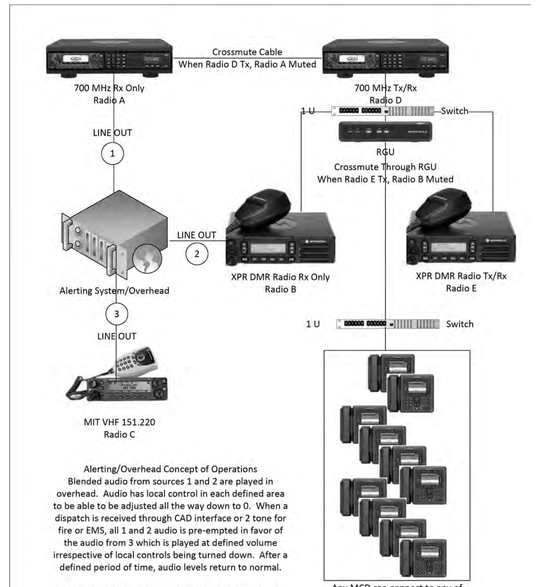

Alerting/Overhead Concept of Operations
Blended audio from sources 1 and 2 are played in overhead. Audio has local control in each defined area to be able to be adjusted all the way down to 0. When a dispatch is received through CAD interface or 2 tone for fire or EMS, all 1 and 2 audio is pre-empted in favor of the audio from 3 which is played at defined volume irrespective of local controls being turned down. After a defined period of time, audio levels return to normal.

Overhead audio from A is muted when D transmits. This is accomplished by consolette interconnection. Likewise overhead audio from B is muted when E transmits. This is accomplished through the RGU as these radios are dumb and have no crossmuting.

Version 2026-04-13

Any MCD can connect to any of Radios D or E
Units could connect to B but will not be programmed for this.
RGU interface of B to the RGU is just to accomplish crossmuting

5 FIRE RADIO BLOCK DIAGRAM
NOT TO SCALE

MANNS WOODWARD STUDIOS
ARCHITECTURE + MASTER PLANNING
8098 SANDPIPER CIR, SUITE H
NOTTINGHAM, MD 21236
☎ 410-344-1460
✉ INFO@MWSARCH.COM
WWW.MWSARCH.COM

CONSULTANT:
DEDC ENGINEERED DESIGN CONSULTING
Delaware: 212 S. Chapel Street, Newark, DE 19711, Phone 302.738.7172, Fax 302.738.7175, www.dedc-eng.com
Pennsylvania: Dranoe Manor Plaza, 30 S. 17th Street, Suite 820, Philadelphia, PA 19103, Phone 267.804.7286

SEAL:
COMMONWEALTH OF PENNSYLVANIA
REGISTERED PROFESSIONAL
SCOTT W. FRENCH
ENGINEER
PE084132

EXETER TOWNSHIP
EMERGENCY SERVICES FACILITY
70 GIBRALTAR ROAD
READING PA 19606

PROJECT NUMBER: 25-049

SUBMISSION:
BID SET

ORIGINAL ISSUE DATE:
10/01/2026

SHEET REVISION SCHEDULE:
No. DATE

ELECTRICAL DETAILS

SHEET NUMBER:
E604

10/1/2026 12:13:42 PM

ALL DRAWINGS ARE PROTECTED BY FEDERAL COPYRIGHT BY MANNS WOODWARD STUDIOS, INC. AND CAN NOT BE REPRODUCED OR MODIFIED IN ANY MANNER WITHOUT WRITTEN PERMISSION. DOCUMENTS MAY NOT BE USED IN PART OR WHOLE TO DEVELOP THE DESIGN OF ANOTHER BUILDING WITHOUT EXPRESS WRITTEN PERMISSION BY MANNS WOODWARD STUDIOS.

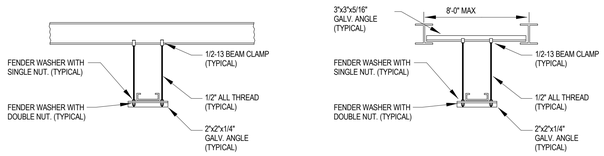

1 CABLE TRAY SUPPORT DETAILS
NOT TO SCALE

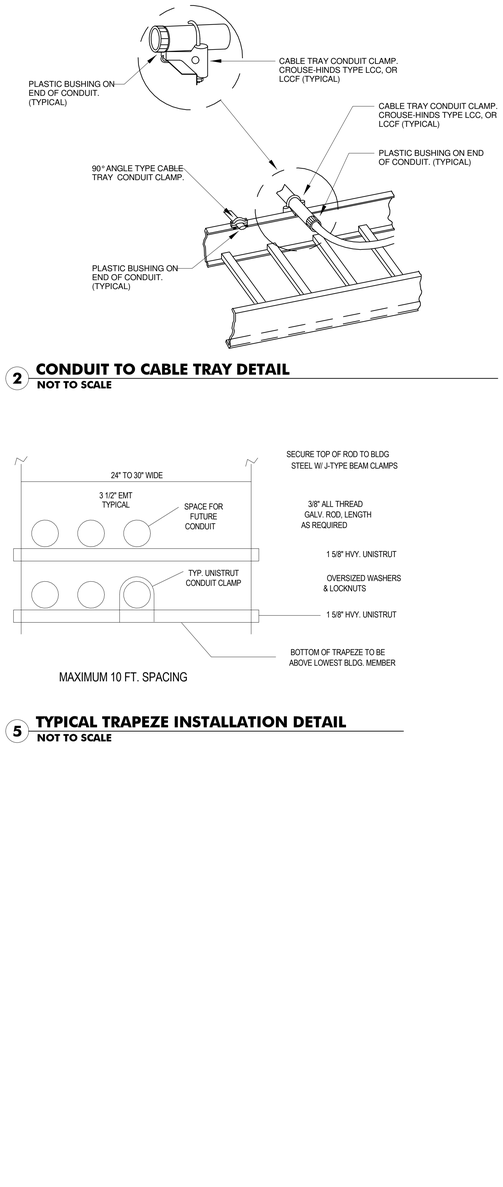

2 CONDUIT TO CABLE TRAY DETAIL
NOT TO SCALE

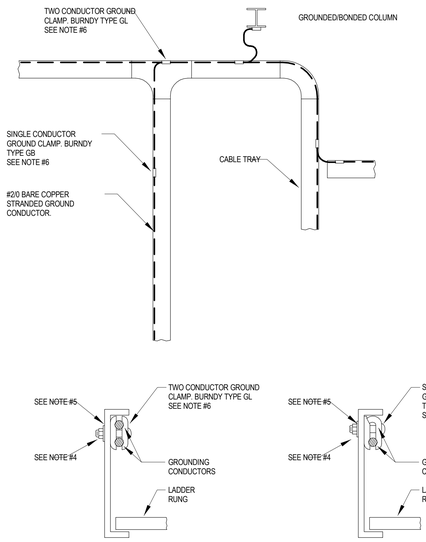

3 CABLE TRAY GROUNDING DETAIL
NOT TO SCALE

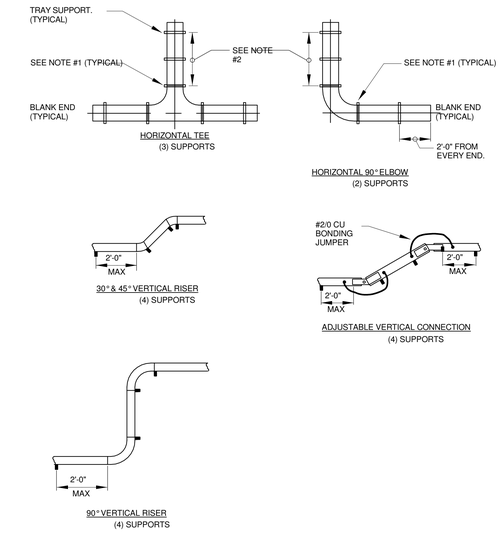

NOTES:

1. PROVIDE SUPPORT AT THE HORIZONTAL AND VERTICAL TANGENT OF EACH FITTING AS INDICATED.
2. PROVIDE INTERMEDIATE SUPPORTS BETWEEN INDICATED SUPPORTS AT 10 FOOT INTERVALS.

4 CABLE TRAY SUPPORT LOCATION DETAIL
NOT TO SCALE

5 TYPICAL TRAPEZE INSTALLATION DETAIL
NOT TO SCALE

6 TYPICAL RF SITE GROUNDING SINGLE LINE DIAGRAM
NOT TO SCALE

ALL DRAWINGS ARE PROTECTED BY FEDERAL COPYRIGHT BY MANNS WOODWARD STUDIOS, INC. AND CAN NOT BE REPRODUCED OR MODIFIED IN ANY MANNER WITHOUT WRITTEN PERMISSION. DOCUMENTS MAY NOT BE USED IN PART OR WHOLE TO DEVELOP THE DESIGN OF ANOTHER BUILDING WITHOUT EXPRESS WRITTEN PERMISSION BY MANNS WOODWARD STUDIOS.

MW STUDIOS
ARCHITECTURE + MASTER PLANNING
8098 SANDPIPER CIR, SUITE H
NOTTINGHAM, MD 21236
410-344-1460
INFO@MWSARCH.COM
WWW.MWSARCH.COM

CONSULTANT:
DEDC
ENGINEERING | DESIGN | CONSULTING
Delaware
312 S. Chapel Street
Newark, DE 19711
Phone
302.738.7172
Fax
302.738.7175
www.dedc-eng.com
Pennsylvania
Dunne Manns Plaza
30 S. 17th Street
Suite 820
Philadelphia, PA 19103
Phone
267.804.7286

SEAL:
COMMONWEALTH OF PENNSYLVANIA
REGISTERED PROFESSIONAL
SCOTT W. FRENCH
ENGINEER
PE044124

EXETER TOWNSHIP
EMERGENCY SERVICES FACILITY
70 GIBRALTAR ROAD
READING PA 19606

PROJECT NUMBER: 25-049

SUBMISSION:
BID SET

ORIGINAL ISSUE DATE:
10/01/2026

SHEET REVISION SCHEDULE:
No. DATE

ELECTRICAL RF GROUNDING DETAILS

SHEET NUMBER:
E605

10/1/2026 12:13:43 PM

Panel: MDP1

Location: ELEC 119 | **Volts:** 480Y/277 | **A.I.C. Rating:** 65kA
Supply From: | **Phases:** 3 | **Mains Type:** MLO
Mounting: Surface | **Wires:** 4 | **Mains Rating:** 600.0 A
Enclosure: Indoor | **MCB Rating:** 600.0 A

Notes:

Circuit Description	Trip	Circuit Number	Number of Poles	Number of Poles	Circuit Number	Trip	Circuit Description
		1			2		
PANEL LP1 VIA XFMR T1	175 A	3	3	3	4	50 A	VRFO-1B
		5			6		
PANEL HP1	150 A	7	3	3	8	45 A	VRFO-1A
		9			10		
		11			12		
PANEL LP2 VIA XFMR T2	70 A	13	3	3	14	50 A	DOAS-1
		15			16		
		17			18		
PANEL HP2	150 A	19	3	3	20	150 A	PANEL LP3 VIA XFMR T3
		21			22		
		23			24		
SPACE	--	25	3	3	26	--	SPACE
		27			28		
		29			30		
SPACE	--	31	3	3	32	--	SPACE
		33			34		
		35			36		
SPACE	--	37	3	3	38	--	SPACE
		39			40		
		41			42		
		43			44		
		45			46		
		47			48		
		49			50		
		51			52		
		53			54		
		55			56		
		57			58		
		59			60		
		61			62		
		63			64		
		65			66		
		67			68		
		69			70		
		71			72		
		73			74		
		75			76		
		77			78		
		79			80		
		81			82		
		83			84		

Notes:

Panel: HP1

Location: ELEC 119 | **Volts:** 480Y/277 | **A.I.C. Rating:** 65kA
Supply From: MDP1 | **Phases:** 3 | **Mains Type:** MLO
Mounting: Surface | **Wires:** 4 | **Mains Rating:** 150.0 A
Enclosure: Indoor | **MCB Rating:** 150.0 A

Notes:

	Circuit Description	Trip	Circuit Number	Number of Poles	Number of Poles	Circuit Number	Trip	Circuit Description	
	LTG - POLE LIGHTS	20 A	1	1	1	2	20 A	LTG - POLE LIGHTS, EMS SIGN, & BOLLARDS	
	LTG - FLAGPOLE LIGHTS	20 A	3	1	1	4	20 A	LTG - BUILDING MOUNTED LIGHTS	
	LTG - BOLLARDS	20 A	5	1	1	6	20 A	LTG - BUNK CORRIDOR LIGHTING	*
*	LTG - BUNK CORRIDOR LIGHTING	20 A	7	1	1	8	20 A	EXTERIOR BUILDING TAPE LIGHTING	*
	LTG - RM 106 TO 120	20 A	9	1	1	10	20 A	EXTERIOR PATIO LIGHTING	
	LTG - RM 100 TO 105 &122	20 A	11	1	1	12	20 A	LTG - UNDERCABINET RM 102	*
*	LTG - RM 123 TO 135, 140 TO 143	20 A	13	1	1	14	20 A	LTG - RM 140	
	SPARE	20 A	15	1	1	16	20 A	SPARE	
	SPARE	20 A	17	1	1	18	20 A	SPARE	
	SPARE	20 A	19	1	1	20	20 A	SPARE	
	SPARE	20 A	21	1	1	22	20 A	SPARE	
	SPACE	--	23	1	1	24	--	SPACE	
	SPACE	--	25	1	1	26	--	SPACE	
	SPACE	--	27	1	1	28	--	SPACE	
	SPACE	--	29	1	1	30	--	SPACE	

Notes:

Panel: LP1

Location: ELEC 119 | **Volts:** 208Y/120 | **A.I.C. Rating:** 42kA
Supply From: | **Phases:** 3 | **Mains Type:** MCB
Mounting: Surface | **Wires:** 4 | **Mains Rating:** 400.0 A
Enclosure: Indoor | **MCB Rating:** 400.0 A

Notes:

	Circuit Description	Trip	Circuit Number	Number of Poles	Number of Poles	Circuit Number	Trip	Circuit Description	
	REC - FITNESS 123	20 A	1	1		2			
	REC - FITNESS 123	20 A	3	1	1	4	20 A	BC-02/03, VRFI-AVIT/01/09	
	REC - FITNESS 123	20 A	5	1	1	6	20 A	REC - APP BAY	
	REC - FITNESS 123	20 A	7	1	1	8	20 A	REC - FITNESS 123	
	REC - FITNESS 123	20 A	9	1	1	10	20 A	REC - KITCHEN & DAYROOM 122	
	REC - FITNESS 123	20 A	11	1	1	12	20 A	REC - KITCHEN COUNTER	
	REC - FITNESS 123	20 A	13	1	1	14	20 A	REC - KITCHEN COUNTER	
	REC - FITNESS 123	20 A	15	1	1	16	20 A	DISHWASHER	**
	REC - FITNESS 123	20 A	17	1	1	18	20 A	REC - BUNK 132	*
	REC - FITNESS 123	20 A	19	1	1	20	20 A	REC - BUNK 133	*
	REC - FITNESS 123	20 A	21	1	1	22	20 A	REC - BUNK 134	*
	REC - FITNESS 123	20 A	23	1	1	24	20 A	REC - BUNK 138	*
			25		1	26	20 A	REC - BUNK 139	*
	IT ROOM UPS1	100 A	27	3	1	28	20 A	REC - OPEN BUNK 140	*
			29		1	30	20 A	REC - OPEN BUNK 140	*
	REC - WATER BOTTLE FILLER	20 A	31	1		32			
	REC - MECHANICAL 124, LAUNDRY 125	20 A	33	1	3	34	225 A	PANEL 'LP1A'	
	REC - ELEC 119	20 A	35	1		36			
*	REC - BUNK 129	20 A	37	1	1	38	20 A	SPARE	
*	REC - BUNK 130	20 A	39	1	1	40	20 A	REC - TRAINING AREA 102	
*	REC - BUNK 131	20 A	41	1	1	42	20 A	DCP-1	
	EXTERIOR BUILDING MOUNTED SIGNAGE	20 A	43	1	1	44	20 A	GWH-1	
	EXTERIOR BUILDING MOUNTED SIGNAGE	20 A	45	1	1	46	20 A	DET-1	
	EXTERIOR BUILDING MOUNTED SIGNAGE	20 A	47	1	1	48	20 A	BT-1	
	REC - DECON	20 A	49	1	2	50	20 A	BP-1	
	REC - AV/STORAGE 103	20 A	51	1		52			
*	REC - OPEN BUNK	20 A	53	1	2	54	20 A	BC-04, VRFI-02 - VRFI-08	
	DRYER	30 A	55	1		56			
*	REC - LINEN STORAGE 128	20 A	57	1	1	58	20 A	SPARE	
	BP-2	20 A	59	1	2	60	20 A	SPARE	
			61			62	20 A	SPARE	
	SPACE	--	63	1	1	64	--	SPACE	
	SPACE	--	65	1	1	66	--	SPACE	
	SPACE	--	67	1	1	68	--	SPACE	
	SPACE	--	69	1	1	70	--	SPACE	
	SPACE	--	71	1	1	72	--	SPACE	

Notes:

Panel: LP1A

Location: STORAGE 105 | **Volts:** 208Y/120 | **A.I.C. Rating:** 42kA
Supply From: | **Phases:** 3 | **Mains Type:** MCB
Mounting: Surface | **Wires:** 4 | **Mains Rating:** 225.0 A
Enclosure: Indoor | **MCB Rating:** 225.0 A

Notes:

Circuit Description	Trip	Circuit Number	Number of Poles	Number of Poles	Circuit Number	Trip	Circuit Description
REC - REFRIGERATOR	20 A	1	1	1	2	20 A	REC - CORRIDOR 126
REC - REFRIGERATOR	20 A	3	1	1	4	20 A	REC - CORRIDOR 106
REC - KITCHEN & DAYROOM 122	20 A	5	1	1	6	20 A	REC - WORK ROOM 116
REC - KITCHEN & DAYROOM 122, EXTERIOR	20 A	7	1	1	8	20 A	REC - BATHROOMS 117, 120, JAN. 121
REC - KITCHEN COUNTER	20 A	9	1	1	10	20 A	REC - WATER BOTTLE FILLER
REC - KITCHEN COUNTER	20 A	11	1	1	12	20 A	REC - T & S 135-137
REC - KITCHEN COUNTER	20 A	13	1	1	14	20 A	FB - KITCHEN & DAYROOM 122
MICROWAVE	20 A	15	1	1	16	20 A	REC - EXTERIOR
COFFEE MAKER	20 A	17	1	1	18	20 A	REC - STORAGE/TURNOUT 114-115
ICE MAKER	20 A	19	1	1	20	20 A	FB - TRAINING AREA 102
REC - GAS RANGE	20 A	21	1	1	22	20 A	FB - TRAINING AREA 102
JB - GAS RANGE HOOD	20 A	23	1	1	24	20 A	FB - TRAINING AREA 102
REC - REFRIGERATOR	20 A	25	1	1	26	20 A	REC - TRAINING AREA 102
REC - TRAINING ROOM COUNTER	20 A	27	1	1	28	20 A	FB - TRAINING AREA 102
REC - TRAINING ROOM COUNTER	20 A	29	1	1	30	20 A	KEF-1
REC - TRAINING ROOM COUNTER	20 A	31	1	1	32	20 A	FB - TRAINING AREA 102
REC - CORRIDOR	20 A	33	1	1	34	20 A	DCP-2
CAD ALERTING	20 A	35	1	1	36	20 A	POWER BAR - TURNOUT GEAR
POWER BAR - TURNOUT GEAR	20 A	37	1	1	38	20 A	POWER BAR - TURNOUT GEAR
POWER BAR - TURNOUT GEAR	20 A	39	1	1	40	20 A	POWER BAR - TURNOUT GEAR
POWER BAR - TURNOUT GEAR	20 A	41	1	1	42	20 A	POWER BAR - TURNOUT GEAR
REC - LAUNDRY 125	20 A	43	1	1	44	20 A	DRYER
DRYER	20 A	45	1	1	46	20 A	WASHER
WASHER	20 A	47	1	1	48	20 A	SPARE
SPARE	20 A	49	1	1	50	20 A	SPARE
SPARE	20 A	51	1	1	52	20 A	SPARE
SPARE	20 A	53	1	1	54	20 A	SPARE
SPARE	20 A	55	1	1	56	20 A	SPARE
SPARE	20 A	57	1	1	58	20 A	SPARE
SPACE	--	59	1	1	60	--	SPACE
SPACE	--	61	1	1	62	--	SPACE
SPACE	--	63	1	1	64	--	SPACE
SPACE	--	65	1	1	66	--	SPACE
SPACE	--	67	1	1	68	--	SPACE
SPACE	--	69	1	1	70	--	SPACE
SPACE	--	71	1	1	72	--	SPACE

Notes:

Panel: LP2

Location: STORAGE/ UNIFORMS... | **Volts:** 208Y/120 | **A.I.C. Rating:** 42kA
Supply From: | **Phases:** 3 | **Mains Type:** MCB
Mounting: Surface | **Wires:** 4 | **Mains Rating:** 150.0 A
Enclosure: Indoor | **MCB Rating:** 150.0 A

Notes:

Circuit Description	Trip	Circuit Number	Number of Poles	Number of Poles	Circuit Number	Trip	Circuit Description	
WATCH OFFICE 111	20 A	1	1	1	2	30 A	MONUMENT SIGN	
REC - WATCH OFFICE 111	20 A	3	1	1	4	20 A	EXTERIOR BUILDING MOUNTED SIGNAGE	
REC - CONFERENCE 110	20 A	5	1	1	6	20 A	GARBAGE DISPOSAL	
REC - CONFERENCE 110	20 A	7	1	1	8	20 A	REC - REFRIGERATOR	
REC - CHIEF OFFICE 109, EXTERIOR	20 A	9	1	1	10	20 A	REC - COPIER	
REC - DEP. CHIEF OFFICE 112	20 A	11	1	1	12	20 A	FB - TRAINING AREA 102	
REC - LINE OFFICER OFFICE 113	20 A	13	1	1	14	20 A	REC - STORAGE/UNIFORMS	
REC - FIRE MARSHALL OFFICE 108	20 A	15	1	1	16	20 A	DISHWASHER	**
REC - ACCOUNTS OFFICE 107	20 A	17	1	1	18	20 A	IPLAYER RGB CONTROLLER	
REC - LOBBY 101, CORRIDOR 106	20 A	19	1	1	20	20 A	EF-2	
REC - CORRIDOR 106, EXTERIOR	20 A	21	1	1	22	20 A	REC - FITNESS 123	
REC - EXTERIOR	20 A	23	1	1	24	20 A	SPARE	
SPARE	20 A	25	1	1	26	20 A	SPARE	
SPARE	20 A	27	1	1	28	20 A	SPARE	
SPARE	20 A	29	1	1	30	20 A	SPARE	
SPARE	20 A	31	1	1	32	20 A	SPARE	
SPARE	20 A	33	1	1	34	20 A	SPARE	
SPACE	--	35	1	1	36	--	SPACE	
SPACE	--	37	1	1	38	--	SPACE	
SPACE	--	39	1	1	40	--	SPACE	
SPACE	--	41	1	1	42	--	SPACE	

Notes:

Panel: HP2

Location: MEZZANINE 200 | **Volts:** 480Y/277 | **A.I.C. Rating:** 65kA
Supply From: MDP1 | **Phases:** 3 | **Mains Type:** MLO
Mounting: Surface | **Wires:** 4 | **Mains Rating:** 150.0 A
Enclosure: Indoor | **MCB Rating:** 150.0 A

Notes:

Circuit Description	Trip	Circuit Number	Number of Poles	Number of Poles	Circuit Number	Trip	Circuit Description
LTG - EMS CORRIDOR LIGHTING	20 A	1	1	1	2	20 A	LTG - RM 156, 200, 201
LTG - APPARATUS BAY 144	20 A	3	1	1	4	20 A	LTG - EXTERIOR FLOOD LIGHTS
		5		1	6	20 A	LTG - OVERHEAD DOOR LIGHTS
EF-1	15 A	7	3		8		
		9		3	10	15 A	AC-1
		11			12		
SCBA COMPRESSOR	60 A	13	3	1	14	20 A	SPARE
		15		1	16	20 A	SPARE
SPARE	20 A	17	1	1	18	20 A	SPARE
SPACE	--	19	1	1	20	--	SPACE
SPACE	--	21	1	1	22	--	SPACE
SPACE	--	23	1	1	24	--	SPACE
SPACE	--	25	1	1	26	--	SPACE
SPACE	--	27	1	1	28	--	SPACE
SPACE	--	29	1	1	30	--	SPACE

Notes:

Panel: LP3

Location: MEZZANINE 200 | **Volts:** 208Y/120 | **A.I.C. Rating:** 42kA
Supply From: | **Phases:** 3 | **Mains Type:** MCB
Mounting: Surface | **Wires:** 4 | **Mains Rating:** 400.0 A
Enclosure: Indoor | **MCB Rating:** 400.0 A

Notes:

Circuit Description	Trip	Circuit Number	Number of Poles	Number of Poles	Circuit Number	Trip	Circuit Description
		1			2		
OVERHEAD DOOR - APPARATUS BAY 144	30 A	3	2	2	4	30 A	OVERHEAD DOOR - APPARATUS BAY 144
		5			6		
OVERHEAD DOOR - APPARATUS BAY 144	30 A	7	2	2	8	30 A	OVERHEAD DOOR - APPARATUS BAY 144
		9			10		
		11			12		
OVERHEAD DOOR - APPARATUS BAY 144	30 A	13	2	2	14	30 A	OVERHEAD DOOR - APPARATUS BAY 144
		15			16		
		17			18		
OVERHEAD DOOR - APPARATUS BAY 144	30 A	19	2	2	20	30 A	OVERHEAD DOOR - APPARATUS BAY 144
		21			22		
OVERHEAD DOOR - APPARATUS BAY 144	30 A	23	2	2	24	30 A	OVERHEAD DOOR - APPARATUS BAY 144
		25			26		
OVERHEAD DOOR - APPARATUS BAY 144	30 A	27	2	2	28	30 A	OVERHEAD DOOR - APPARATUS BAY 144
REC - CORRIDOR 145	20 A	29	1		30		
		31		2	32	30 A	OVERHEAD DOOR - APPARATUS BAY 144
PANEL LP3A	225 A	33	3		34		
		35		2	36	60 A	VRFO-2
		37			38		
BC-04, VRFI-18 - VRFI-21	20 A	39	2	1	40	20 A	F-1
EMS SERVER	30 A	41	1	1	42	20 A	REC - WATER/SPRINKLER
STACKED DRYER	30 A	43	2	1	44	20 A	REC - STORAGE
		45		1	46	20 A	AIRVAC CONTROL PANEL #1
REC - IT ROOM	20 A	47	1	1	48	20 A	AIRVAC CONTROL PANEL #2
BC-01, VRFI-10 - 17	20 A	49	2	1	50	20 A	REC - EXTERIOR EMS SIDE
		51			52		
DECON UNIT	20 A	53	2	2	54	35 A	SCBA WASHER
		55		1	56	20 A	CO/NO2 CONTROL PANEL
GEAR DRYER	35 A	57	2	1	58	20 A	REC - GENERAL
		59		1	60	20 A	SPARE
SPARE	20 A	61	1	1	62	20 A	SPARE
SPACE	--	63	1	1	64	--	SPACE
SPACE	--	65	1	1	66	--	SPACE
SPACE	--	67	1	1	68	--	SPACE
SPACE	--	69	1	1	70	--	SPACE
SPACE	--	71	1	1	72	--	SPACE

Notes:

Panel: LP3A

Location: MEZZANINE 200 | **Volts:** 208Y/120 | **A.I.C. Rating:** 42kA
Supply From: LP3 | **Phases:** 3 | **Mains Type:** MCB
Mounting: Surface | **Wires:** 4 | **Mains Rating:** 225.0 A
Enclosure: Indoor | **MCB Rating:** 225.0 A

Notes:

Circuit Description	Trip	Circuit Number	Number of Poles	Number of Poles	Circuit Number	Trip	Circuit Description
REC - REFRIGERATOR	20 A	1	1	1	2	20 A	REC - APPARATUS BAY 144
REC - KITCHEN COUNTER	20 A	3	1	1	4	20 A	REC - APPARATUS BAY 144
REC - COFFEE MAKER	20 A	5	1	1	6	20 A	REC - APPARATUS BAY 144
REC - MICROWAVE	20 A	7	1	1	8	20 A	REC - APPARATUS BAY 144
KITCHEN EXHAUST	20 A	9	1	1	10	20 A	REC - APPARATUS BAY 144
REC - COFFEE MAKER	20 A	11	1	1	12	20 A	CONTROL PANEL
REC - MICROWAVE	20 A	13	1	1	14	20 A	AVF-1
REC - EXTERIOR	20 A	15	1	1	16	20 A	AVF-1
REC - EMS DAYROOM 146	20 A	17	1	1	18	20 A	AVF-1
EMS OFFICE II 148	20 A	19	1	1	20	20 A	AVF-1
REC - GENERAL STORAGE	20 A	21	1	1	22	20 A	GWH-1
EMS OFFICE I 152	20 A	23	1	1	24	20 A	EF-2, EF-5, KEF-2
REC - EMS STORAGE	20 A	25	1		26		
REC - GROUNDS STORAGE	20 A	27	1	3	28	20 A	EUH-1
REC - TOOL ROOM, TRAINING TOWER	20 A	29	1		30		
ICE CUBE MACHINE	20 A	31	1	1	32	20 A	AVF-1
REC - TOOL ROOM 155	20 A	33	1	1	34	20 A	B-1
REC - TOOL ROOM 155	20 A	35	1	1	36	20 A	B-2
REC - TOOL ROOM 155	20 A	37	1	1	38	20 A	REC - APPARATUS BAY 144
REC - SCBA 153	20 A	39	1	1	40	20 A	VP-1
RCPT APPARATUS BAY 144	20 A	41	1	1	42	20 A	REC - EXTERIOR EMS SIDE
		43			44		
TRAINING TOWER WINCH	30 A	45	3	3	46	30 A	TRAINING TOWER WINCH
		47			48		
		49		1	50	20 A	REC - EXTERIOR EMS SIDE
TRAINING TOWER WINCH	30 A	51	3	2	52	20 A	HVLS1-1
		53			54		
REC - MEZZANINE	20 A	55	1	2	56	20 A	HVLS1-1
HVLS1-1	20 A	57	2		58		
		59		2	60	20 A	HVLS1-1
SPACE	--	61	1		62		
SPACE	--	63	1	1	64	--	SPACE
SPACE	--	65	1	1	66	--	SPACE
SPACE	--	67	1	1	68	--	SPACE
SPACE	--	69	1	1	70	--	SPACE
SPACE	--	71	1	1	72	--	SPACE

Notes:

Panel: ITP

Location: IT 118 | **Volts:** 120V | **A.I.C. Rating:** 42kA
Supply From: | **Phases:** 1 | **Mains Type:** MCB
Mounting: Surface | **Wires:** 3 | **Mains Rating:** 100.0 A
Enclosure: Indoor | **MCB Rating:** 100.0 A

Notes:

Circuit Description	Trip	Circuit Number	Number of Poles	Number of Poles	Circuit Number	Trip	Circuit Description	
SERVER	30 A	1	1	1	2	20 A	CARD ACCESS PANEL	
SERVER	30 A	3	1	1	4	20 A	CARD ACCESS PANEL	
SERVER	30 A	5	1	1	6	20 A	SECURITY CONTROL PANEL	
REC - IT 118	20 A	7	1	1	8	20 A	FACP	***
REC - IT 118	20 A	9	1	1	10	20 A	SPARE	
SPARE	20 A	11	1	1	12	20 A	SPARE	
SPARE	20 A	13	1	1	14	20 A	SPARE	
SPARE	20 A	15	1	1	16	20 A	SPARE	
SPARE	20 A	17	1	1	18	20 A	SPARE	
SPACE	--	19	1	1	20	--	SPACE	
SPACE	--	21	1	1	22	--	SPACE	
SPACE	--	23	1	1	24	--	SPACE	
SPACE	--	25	1	1	26	--	SPACE	
SPACE	--	27	1	1	28	--	SPACE	
SPACE	--	29	1	1	30	--	SPACE	

Notes:

GENERAL PANEL SCHEDULE NOTES:

* = PROVIDE AFCI TYPE CIRCUIT BREAKER IN THIS BREAKER POSITION.
** = PROVIDE COMBINATION AFCI/GFCI TYPE CIRCUIT BREAKER IN THIS BREAKER POSITION.
*** = PROVIDE LOCKABLE HANDLE ATTACHMENT ON THIS BREAKER POSITION.

MANNS WOODWARD STUDIOS
ARCHITECTURE + MASTER PLANNING
8098 SANDPIPER CIR, SUITE H
NOTTINGHAM, MD 21236
☎ 410-344-1460
INFO@MWSARCH.COM
WWW.MWSARCH.COM

CONSULTANT:

DEDC
ENGINEERING | DESIGN | CONSULTING
Delaware
212 S. Chapel Street
Newark, DE 19711
Phone
302.738.7172
Fax
302.738.7175
www.dedc-eng.com
Pennsylvania
Drums Morris Plaza
30 S. 17th Street
Suite 820
Philadelphia, PA 19103
Phone
267.804.7286

SEAL:

COMMONWEALTH OF PENNSYLVANIA
REGISTERED PROFESSIONAL
SCOTT W. FRENCK
ENGINEER
PE084124

EXETER TOWNSHIP
EMERGENCY SERVICES FACILITY
70 GIBRALTAR ROAD
READING PA 19606

PROJECT NUMBER: 25-049

SUBMISSION:
BID SET

ORIGINAL ISSUE DATE:
10/01/2026

SHEET REVISION SCHEDULE:
No. DATE

ELECTRICAL PANEL SCHEDULES

SHEET NUMBER:
E606

10/1/2026 12:13:45 PM

ALL DRAWINGS ARE PROTECTED BY FEDERAL COPYRIGHT BY MANNS WOODWARD STUDIOS, INC. AND CAN NOT BE REPRODUCED OR MODIFIED IN ANY MANNER WITHOUT WRITTEN PERMISSION. DOCUMENTS MAY NOT BE USED IN PART OR WHOLE TO DEVELOP THE DESIGN OF ANOTHER BUILDING WITHOUT EXPRESS WRITTEN PERMISSION BY MANNS WOODWARD STUDIOS.

SYMBOL	DESCRIPTION	NOTE	MOUNTING/BACKBOX
WP1	INPUT WALL PLATE - AVoIP YEALINK EN300		RECESSED WALL MOUNT @ 18" A.F.F. SINGLE GANG BACKBOX BY E.C.
S1	CEILING SPEAKER (70V) YEALINK CS10		RECESSED IN CEILING GRID TIE TO STRUCTURE WITH SAFETY CABLE
MIC1	CEILING MICROPHONE YEALINK CM50		RECESSED IN CEILING GRID TIE TO STRUCTURE WITH SAFETY CABLE
CAM1	CAMERA YEALINK SMARTVISION 80		WALL MOUNT INCLUDED; SG BOX BY E.C. YEALINK UVC8X FOR CEILING MOUNT
TP1	TOUCH PANEL - 7" YEALINK MTOUCH PLUS		SITS ON CONFERENCE TABLE
TP2	TOUCH PANEL - 10.1" YEALINK CTP25		RECESSED WALL MOUNT @ 42" A.F.F. SINGLE GANG BACKBOX BY E.C.
TP3	TOUCH PANEL - 7" QSC TSC-70-G3		RECESSED WALL MOUNT @ 42" A.F.F. DUAL GANG BACKBOX BY E.C.
B8	TOUCH PANEL - 5" QSC TSC-50-G3		RECESSED WALL MOUNT @ 42" A.F.F. SINGLE GANG BACKBOX BY E.C.
BAR	MEETING BAR YEALINK MODEL TBD		WALL MOUNT INCLUDED MOUNTED CENTERED BELOW DISPLAY
SEN	ROOM OCCUPANCY SENSOR YEALINK ROOMSENSOR		CEILING MOUNTED TO LAY-IN TILE
TV 32"	DISPLAY - 32" LG MODEL VARIES BY LOCATION		CHIEF PAC526F RECESSED TS318TU SWING ARM MOUNT W/ PSBUB BRACKET
TV 65"	DISPLAY - 65" LG MODEL VARIES BY LOCATION		CHIEF RECESSED BACKBOX AND SWING MOUNT ARM (VARIES BY LOCATION)
TV 98"	DISPLAY - 98" LG 98UM9K-B		CHIEF PAC501 RECESSED BACKBOX PNRIWUB SWING ARM MOUNT W/ PSBUB BRACKET
S2	SURROUND SOUND SPEAKER MAKE/MODEL TBD		MOUNTING TBD
SS	SURROUND SOUND SUBWOOFER MAKE/MODEL TBD		FLOOR OR SHELF MOUNT
S3	AV EXTERIOR SPEAKER MAKE/MODEL TBD		SURFACE WALL MOUNT @ 96" A.F.F. SINGLE GANG BACKBOX BY E.C.

GENERAL NOTES:

GENERAL:

-THESE DRAWINGS ARE FOR THE USE OF ILLUMINATED INTEGRATION, ITS AGENTS, SUBCONTRACTORS AND/OR CLIENTS FOR THE PURPOSES OF THE PROJECT FOR WHICH THEY WERE COMPOSED. THERE SHALL BE NO REPRODUCTION OR RETRANSMISSION OF THESE DOCUMENTS, IN WHOLE OR IN PART, WITHOUT EXPRESS WRITTEN CONSENT FROM ILLUMINATED INTEGRATION OR IN FULFILLMENT OF PRIOR CONTRACTUAL OBLIGATIONS.
-COMPLIANCE WITH LOCAL REGULATIONS, CODES AND ORDINANCES IS THE RESPONSIBILITY OF CONTRACTORS PERFORMING WORK INDICATED WITHIN THIS DOCUMENTATION. INSTALLATION SHALL MEET OR EXCEED APPLICABLE REGULATIONS, CODES AND ORDINANCES.
-ELECTRICAL, STRUCTURAL OR OTHER LICENSED PROFESSIONAL ENGINEERING STAMPS, CERTIFICATIONS, APPROVALS OR SIGNATURES BY OTHERS, UNLESS NOTED OTHERWISE.
-ALL PERMITTING BY OTHERS.
-VERIFY SITE CONDITIONS INDICATED BEFORE PERFORMING WORK PRESCRIBED OR PROCURING EQUIPMENT, INCLUDING ARCHITECTURAL, STRUCTURAL, MECHANICAL, ELECTRICAL, PLUMBING, FIRE PROTECTION AND OTHER TRADES. CROSS REFERENCE DOCUMENTATION AND COORDINATE WITH OTHER TRADES WHERE APPROPRIATE. NOTIFY DESIGN ENGINEER AND PROJECT MANAGER OF THIS SET OF ANY DISCREPANCIES, CONFLICTS OR TIMELINE DEPENDENCIES.
-EQUIPMENT SPECIFIED WITHIN IS THE BASIS OF THE DESIGN. EQUIPMENT SUBSTITUTIONS WILL NOT BE ACCEPTED WITHOUT FORMAL, WRITTEN SUBMISSION DEMONSTRATING EQUIVALENT OR SUPERIOR FUNCTIONALITY, CAPACITY AND QUALITY WITH COST SAVINGS TO CLIENT OR OWNER. ALL SUBSTITUTIONS REQUIRE WRITTEN APPROVAL FROM ILLUMINATED INTEGRATION PRIOR TO PROCUREMENT. SUBSTITUTION SUBMISSIONS TO BE IN ACCORDANCE WITH DIVISION 1 OF APPLICABLE PROJECTS.
-QUANTITIES NOTATED WITHIN SCHEDULES, LEGENDS OR EQUIPMENT LISTS ARE FOR QUICK REFERENCE. ANY DISCREPANCY WITH QUANTITIES SHOWN IN LAYOUT DRAWINGS SHOULD BE BROUGHT TO THE ATTENTION OF THE DESIGN DEPARTMENT AT ILLUMINATED INTEGRATION FOR RECONCILIATION.

TRADE COORDINATION:

-REPRESENTATION OF WORK PERFORMED BY OTHER TRADES IS FOR REFERENCE AND COORDINATION ONLY. REFER TO AUTHORITATIVE DOCUMENTATION FOR EACH TRADE FOR EXPECTED WORK BY OTHERS. THESE DRAWINGS ARE INSTRUCTIVE SOLELY FOR CONTRACTED WORK TO BE PERFORMED BY SYSTEMS INTEGRATOR OR ITS SUBCONTRACTORS.
-OTHER TRADES SHALL BE RESPONSIBLE FOR ADJUSTING TO EQUIPMENT LOCATIONS SHOWN IN THESE DOCUMENTS AND COORDINATING ANY ADJUSTMENTS REQUIRED BY THE SYSTEMS SHOWN HEREIN. SYSTEMS INTEGRATOR SHALL NOT BE RESPONSIBLE FOR REWORK RESULTING FROM UNCOORDINATED EQUIPMENT PLACEMENT, INCLUDING BUT NOT LIMITED TO FIXTURES, DUCTWORK, PLUMBING, FIRE PROTECTION AND ANY CEILING- OR WALL-MOUNTED EQUIPMENT.
-ILLUMINATED INTEGRATION IS NOT RESPONSIBLE FOR WORK DEPENDENT ON THIS DOCUMENTATION THAT HAS NOT BEEN PERFORMED ACCORDING TO ITS SPECIFICATIONS.
-SYSTEMS INTEGRATOR SHALL NOT BE RESPONSIBLE FOR EMERGENCY LIGHTING, FIRE ALARMS, EMERGENCY MESSAGING OR ANY OTHER LIFE SAFETY MECHANISMS EXCEPT WHERE EXPLICITLY CALLED OUT WITHIN SCOPE. SOURCE FOR FIRE ALARM MUTE, PANIC/EMERGENCY STATES OR OTHER SIMILAR TO BE PROVIDED BY OTHERS AND COORDINATED WITH ILLUMINATED INTEGRATION OR SYSTEMS INTEGRATOR WHERE REQUIRED BY CODE.

DIMENSIONS:

-WRITTEN DIMENSIONS TAKE PRECEDENCE OVER SCALED MEASUREMENTS. SYMBOLS MAY BE DIAGRAMMATIC AND SHIFTED IN REPRESENTATION FOR CLARITY. ALL DIMENSIONS TO BE VERIFIED IN FIELD.
-PROJECT ORIGIN (0,0) FOR AUDITORIUMS, THEATERS, CHURCHES, LECTURE HALLS OR SIMILAR SPACES SHALL BE SET AT THE INTERSECTION OF THE CENTER LINE (CENTER-MOST AXIS OF A STAGE OR PLATFORM BETWEEN THE PROSCENIUM ARCH OR STAGE STRUCTURE) AND 1) THE PLASTER LINE (UPSTAGE, ARCHITECTURALLY-UNOBSTRUCTED DATUM OF THE PROSCENIUM ARCH) IN PROSCENIUM SPACES OR 2) THE DOWNSTAGE EDGE OF THE STAGE OR PLATFORM. THIS GLOBAL ORIGIN FOR PERFORMANCE TECHNOLOGY SYSTEMS WITHIN SUCH SPACES SHALL APPLY UNLESS OTHER SPECIFIC ORIGIN POINTS ARE CALLED OUT.
-WHERE MEASUREMENTS TO THE ORIGIN OR ITS AXES ARE OBSTRUCTED FROM THE MEASUREMENT LOCATION OF EQUIPMENT, AN OFFSET SHALL BE IDENTIFIED AND USED FOR CONSISTENT MEASUREMENT AGAINST STRUCTURAL OR ARCHITECTURAL FEATURES. CALCULATED DIMENSIONS (E.G. USING ANGLES TO CALCULATE SQUARE DIMENSIONS) SHALL ONLY BE USED IF DIRECT PERPENDICULAR MEASUREMENTS ARE INFEASIBLE.

EQUIPMENT MOUNTING:

-OVERHEAD RIGGING TO BE COMPLIANT WITH ANSI E1.4-2.
-GC TO PROVIDE ADDITIONAL MOUNTING STRUCTURE, BLOCKING OR BACKING AS CALLED OUT IN THESE DRAWINGS FOR EQUIPMENT WITHIN ILLUMINATED SCOPE.
-ALL RIGGING DESIGNED FOR LOADS WITHIN SCOPE FOR AVL SYSTEMS. NO OTHER TRADES TO SUSPEND EQUIPMENT OR CABLING FROM AVL RIGGING WITHOUT PRIOR COORDINATION.
-ALL TRADES SHALL AVOID ATTACHING TO OR CROSSING UNDERNEATH THE LIGHTING SUPPORT PIPES GRIDS OR TRUSSES WITHOUT COORDINATING WITH OR RECEIVING WRITTEN APPROVAL FROM ILLUMINATED INTEGRATION. AVL LOADS SHALL BE SUSPENDED DIRECTLY FROM BUILDING STRUCTURE UNLESS COORDINATED OTHERWISE WITH OTHER TRADES.
-ALL TRADES TO COORDINATE WORK OVER AVL MOUNTING STRUCTURES TO AVOID INTERACTION AND PERFORMANCE CONFLICT.
-MOUNTING HARDWARE TO BE INSTALLED IN ACCORDANCE WITH MANUFACTURER'S SPECIFICATIONS.
-MOUNTING HARDWARE TO BE PAINTED TO MATCH SURROUNDING FINISH, OTHERWISE BLACK IN PUBLICLY-VIEWABLE SPACES. MOUNTING HARDWARE IN LIMITED ACCESS SPACES WILL NOT BE REQUIRED TO BE ADDITIONALLY FINISHED WITH PAINT OR OTHER TREATMENT. THESE SPACES INCLUDE BUT ARE NOT LIMITED TO CRAWLSPACES, ATTICS, IDF OR MDF CLOSETS OR SIMILAR LOW-VOLTAGE OR LINE-VOLTAGE ELECTRICAL ROOMS, MECHANICAL SPACES, PLENUMS OR OTHER SPACES OF SIMILAR ACCESS OR GENERAL FINISH.

APPROVALS:

-COORDINATE DEVICE COLORS WITH ARCHITECT AND FINISH SCHEDULE OR MATCH TO EXISTING CONDITIONS. CUSTOM COLORS FOR ITEMS WITHOUT MANUFACTURER-SUPPLIED OPTIONS ONLY TO BE PROVIDED AT SPECIFIC OWNER REQUEST. ALL FINAL FINISHES TO BE APPROVED BY ARCHITECT, INTERIOR DESIGNER, AUTHORITY HAVING JURISDICTION AND/OR APPROPRIATE APPROVER PRIOR TO PROCUREMENT.
-DRAWINGS TO BE ACTIVELY APPROVED. RETURN OF REVIEWED DOCUMENTS WITHOUT NOTES OR ACTIVE ACTION TO REVISE AND RESUBMIT SHALL CONSTITUTE APPROVAL.
-APPROVAL TO BE BY OWNER, OWNER AGENT, CONSTRUCTION MANAGEMENT OR CONTRACTING ENTITY. APPROVAL OF THIS DOCUMENT BY THOSE PARTIES CONSTITUTES ALLOWANCE TO INSTALL AS INDICATED ON APPROVED DRAWINGS REGARDING QUANTITIES, COLORS, PLACEMENT INDICATED MEANS AND METHODS, AND OTHER HEREIN-SPECIFIED MATERIALS AND WORKMANSHIP.

GENERAL DRAWING STANDARDS:

DEVICE ID PREFIXES:

ALS- ASSISTED LISTENING SYSTEM
AMP- AMPLIFIER
ANT- ANTENNA
BCS- BATTERY CHARGING STATION
BS- BUTTON STATION
BT- BLUETOOTH RECEIVER
CAM- CAMERA
CBAR- CONFERENCING AV BAR
COMB- ANTENNA COMBINER
COM- INTERCOM
COMP- COMPUTER
CONS- LIGHTING CONSOLE
CONV- CONVERTER
CS- CONNECTOR STRIP
CTRL- CONTROL INTERFACE
DA- DISTRIBUTION AMPLIFIER
DEBC- DMX EMERGENCY BYPASS CONTROLLER
DIM- DIMMER
DISP- DISPLAY
DIST- DISTRIBUTOR
DSP- SYSTEMS PROCESSOR
EBDK- EMERGENCY BYPASS DETECTION KIT
ESTP- EMERGENCY STOP BUTTON STATION
FB- FLOOR BOX
GJB- GRID IRON JUNCTION BOX
GTWY- LIGHTING GATEWAY
IO- INPUT/OUTPUT INTERFACE
JB- JUNCTION BOX
LS- LIGHT SENSOR
MIX- AUDIO MIXER
MON- AUDIO/VIDEO MONITOR
MPB- MEDIA PLAYBACK
MTR- MOTOR
NPB- NETWORK PATCH BAY
OS- OCCUPANCY SENSOR
PB- PLUG BOX
PCD- POWER AND CONTROL DISTRIBUTION
PDU- PASSIVE POWER DISTRIBUTION UNIT
PMB- PIPE-MOUNT BOX
PNL- ELECTRICAL PANEL
PROJ- PROJECTOR
PSU- POWER SUPPLY UNIT
REC- AUDIO/VIDEO RECORDER
RK- EQUIPMENT RACK
RL- RUNNING LIGHT
RP- RACK PANEL
RTR- VIDEO ROUTER
RX- RECEIVER
SC- PROJECTION SCREEN/CONTROL
SEQ- POWER SEQUENCING
SNSR- SENSOR
SPKR- LOUDSPEAKER
SPLT- SIGNAL SPLITTER
SUB- SUBWOOFER
SW- NETWORK SWITCH
SWR- VIDEO SWITCHER
TP- TOUCH SCREEN CONTROL PANEL
TX- TRANSMITTER
UPS- UNINTERRUPTIBLE POWER SUPPLY
VC- VOLUME CONTROL
VW- VIDEO WALL
WAP- WIRELESS ACCESS POINT
WLS- WIRELESS MIC RECEIVER
WP- WALL PLATE
XCVR- TRANSCEIVER

N.B. NOT ALL DEVICE ID PREFIXES MAY BE USED IN ALL PROJECTS

DRAWING REFERENCE SYMBOL LEGEND:
SHT# -SHEET LOCATION OF REFERENCED DRAWING
-DETAIL DRAWING NUMBER

-SECTION VIEW REFERENCE MARKER
-ELEVATION VIEW REFERENCE MARKER
-ENLARGED PLAN VIEW REFERENCE MARKER
-PLASTER LINE
-CENTER LINE
-ELEVATION DATUM
-LINE BREAK
-HIDDEN LINE
-DEMO
-MATCH
-DETAIL CALLOUT
-DATUM
-REVIEWER ACTION NEEDED

REVISION DELTA TAG LEGEND:
REVISION NUMBER (E.G. CD100)
REVISION LOG REFERENCE ID

COMMON ABBREVIATIONS:

ACT – ABOVE COUNTERTOP
AFF – ABOVE FINISHED FLOOR
AVoIP – AUDIO/VIDEO OVER INTERNET PROTOCOL
CKT – CIRCUIT
CL – CENTER LINE
CONT. – CONTINUED
COORD. – COORDINATE AMONG TRADES
DIM – DIMENSION
ETR – EXISTING TO REMAIN
ED. – EQUIDISTANT
EQPT – EQUIPMENT
FOH – FRONT OF HOUSE (CONTROL BOOTH)
I.D. – INNER DIAMETER
INCL. – INCLUDE(D)
LX – LIGHTING
MAX. – MAXIMUM
MFR – MANUFACTURER
MIN. – MINIMUM
MOD. – MODIFY
N.B. – NOTA BENE, TAKE SPECIAL NOTE
N.I.C – NOT IN CONTRACT
NOM. – NOMINAL
O.C. – ON CENTER
O.D. – OUTER DIAMETER
OFCI – OWNER-FURNISHED, CONTRACTOR INSTALLED
OFE – OWNER-FURNISHED EQUIPMENT
OPT. – OPTIONAL
PL – PLASTER LINE
PoE – POWER OVER ETHERNET
QTY – QUANTITY
RCPT – RECEPTACLE
REF. – REFERENCE
REQ. – REQUIRED
R&R – REMOVE AND REPLACE
RU – RACK UNIT SPACE (1.75")
TBD – TO BE DETERMINED
TYP. – TYPICAL
VIF – VERIFY IN FIELD

DEFINITIONS:

ABANDON: EXISTING TO REMAIN BUT NOT USED IN NEW SYSTEM. LOCKOUT OR CAP AS NECESSARY FOR SAFETY AND/OR AESTHETICS.
FURNISH: SUPPLY WITHOUT INSTALLATION.
MODIFY: SIGNIFICANT ELEMENTS OF A DEVICE WILL REMAIN INTACT WHILE SOME PIECES ARE ALTERED OR REPLACED.
PROVIDE: FURNISH AND INSTALL.
REMOVE: UNINSTALL TO NOT BE REUSED IN NEW SYSTEM. DISPOSE OF IN ACCORDANCE TO PROCEDURES REQUIRED BY CLIENT. MAKE BEST EFFORT TO RECYCLE MATERIALS WHERE POSSIBLE.

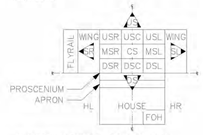

AUDITORIUM/STAGE LOCATION KEY

APRON – FRONT PART OF STAGE EXTENDING PAST PROSCENIUM
CL – CENTER LINE
CS – CENTER STAGE
DS – DOWN STAGE
DSC – DOWN STAGE CENTER
DSL – DOWN STAGE LEFT
DSR – DOWN STAGE RIGHT
FLYRAIL – WHERE RIGGING LINE SETS ARE OPERATED IN WINGS
FOH – FRONT OF HOUSE CONTROL BOOTH
HOUSE – AUDIENCE SEATING
HC – HOUSE CENTER
HL – HOUSE LEFT
HR – HOUSE RIGHT
MS – MID STAGE
MSC – MID STAGE CENTER
MSL – MID STAGE LEFT
MSR – MID STAGE RIGHT
OFF STAGE – AWAY FROM CENTER LINE
ON STAGE – TOWARD CENTER LINE
PL – PLASTER LINE, UNOBSTRUCTED UPSTAGE EDGE OF PROSCENIUM ARCH
PROSCENIUM – ARCH SEPARATING STAGE FROM HOUSE
SL – STAGE LEFT
SR – STAGE RIGHT
THRUST – STAGE EXTENDING INTO AUDIENCE
US – UP STAGE
USC – UP STAGE CENTER
USL – UP STAGE LEFT
USR – UP STAGE RIGHT
WING – SIDE OF STAGE NOT SEEN FROM HOUSE

RISER GRAPHIC LEGEND:

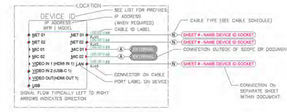

ILLUMINATED INTEGRATION
1450 Fulling Mill Rd.
Middletown, PA 17057
717-996-4596
www.illuminated-integration.com

THIS DRAWING AND THE IDEAS, ARRANGEMENTS, DESIGNS, AND PLANS INDICATED OR REPRESENTED HEREON ARE OWNED BY AND REMAIN THE EXCLUSIVE PROPERTY OF ILLUMINATED INTEGRATION, INC. (ii). THEY HAVE BEEN CREATED AND DEVELOPED FOR USE ON AND IN CONNECTION WITH THIS SPECIFIED PROJECT ONLY AND MAY NOT BE USED FOR ANY OTHER PROJECT WITHOUT THE EXPRESS WRITTEN PERMISSION OF (ii). WRITTEN DIMENSIONS ON DRAWINGS SHALL HAVE AUTHORITY OVER SCALED DIMENSIONS. CONTRACTORS AND MANUFACTURERS SHALL VERIFY AND BE RESPONSIBLE FOR ALL DIMENSIONS AND JOBSITE CONDITIONS. ANY VARIATIONS OR DISCREPANCIES IN THE DRAWINGS SHALL BE REPORTED TO (ii) PRIOR TO BEGINNING WORK. THESE DRAWINGS REPRESENT VISUAL CONCEPTS ONLY AND FORM THE BASIS OF DESIGN. RESPONSIBILITY FOR STRUCTURAL RIGGING AND RELATED ENGINEERING IS BY OTHERS. ALL MEANS, METHODS AND MATERIALS TO MEET OR EXCEED APPLICABLE CODES AND INDUSTRY STANDARDS.

CLIENT
LOGO

CLIENT CONTACT
-

REVISIONS

Rev:	Date:	By:	Description:

PROJECT NAME
EXETER TWP ESF

FACILITY ADDRESS

DESIGNED BY	D&E CHECKED BY
MS	
DRAFTED BY	DATE
JE	09/11/2026
SCALE	ORIGINAL PAPER SIZE
N/A	N/A

SHEET TITLE
GENERAL INFO AND LEGEND

FILE NAME
5372_ExeterESF_CoverPage

AV01

PROJECT ID	SHEET NO.
ii-5372	1 OF 2

MW STUDIOS
ARCHITECTURE + MASTER PLANNING
8098 SANDPIPER CIR, SUITE H
NOTTINGHAM, MD 21236
410-344-1460
INFO@MWSARCH.COM
WWW.MWSARCH.COM

SEAL:

EXETER TOWNSHIP
EMERGENCY SERVICES FACILITY
70 GIBRALTAR ROAD
READING, PA 19606

PROJECT NUMBER: 25-049

SUBMISSION:
BID SET

ORIGINAL ISSUE DATE:
10/01/2026

SHEET REVISION SCHEDULE:
No. DATE

GENERAL INFO AND LEGEND

SHEET NUMBER:
AV01

10/1/2026 8:51:04 PM

ALL DRAWINGS ARE PROTECTED BY FEDERAL COPYRIGHT BY MANNS WOODWARD STUDIOS, INC. AND CAN NOT BE REPRODUCED OR MODIFIED IN ANY MANNER WITHOUT WRITTEN PERMISSION. DOCUMENTS MAY NOT BE USED IN PART OR WHOLE TO DEVELOP THE DESIGN OF ANOTHER BUILDING WITHOUT EXPRESS WRITTEN PERMISSION BY MANNS WOODWARD STUDIOS.

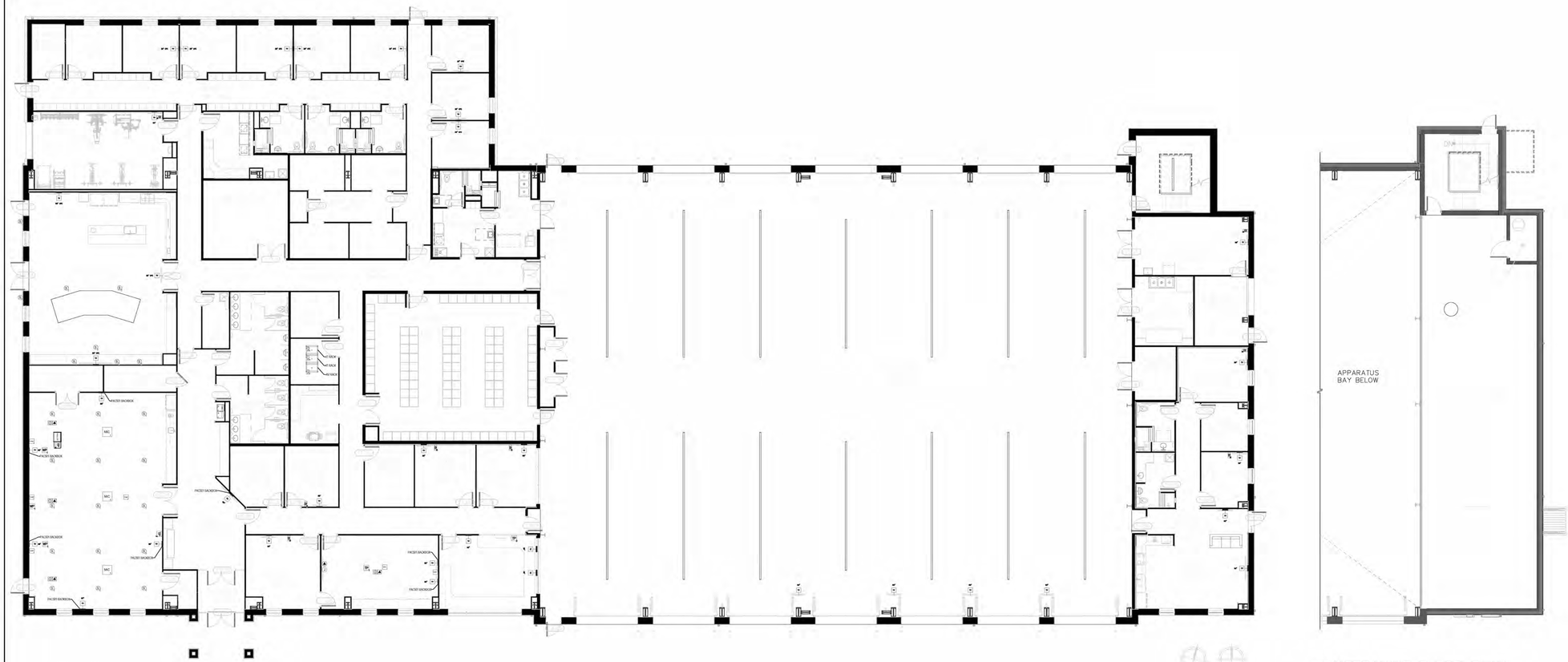

1 1ST FLOOR PLAN
3/32" = 1'-0"

2 MEZZANINE FLOOR PLAN
3/32" = 1'-0"

ILLUMINATED INTEGRATION
1450 Fulling Mill Rd.
Middletown, PA 17057
717-996-4596
www.illuminated-integration.com

THIS DRAWING AND THE IDEAS, ARRANGEMENTS, DESIGNS, AND PLANS INDICATED OR REPRESENTED HEREON ARE OWNED BY AND REMAIN THE EXCLUSIVE PROPERTY OF ILLUMINATED INTEGRATION, INC. (ii). THEY HAVE BEEN CREATED AND DEVELOPED FOR USE ON AND IN CONNECTION WITH THIS SPECIFIED PROJECT ONLY AND MAY NOT BE USED FOR ANY OTHER PROJECT WITHOUT THE EXPRESS WRITTEN PERMISSION OF (ii). WRITTEN DIMENSIONS ON DRAWINGS SHALL HAVE AUTHORITY OVER SCALED DIMENSIONS. CONTRACTORS AND MANUFACTURERS SHALL VERIFY AND BE RESPONSIBLE FOR ALL DIMENSIONS AND JOBSITE CONDITIONS. ANY VARIATIONS OR DISCREPANCIES IN THE DRAWINGS SHALL BE REPORTED TO (ii) PRIOR TO BEGINNING WORK. THESE DRAWINGS REPRESENT VISUAL CONCEPTS ONLY AND FORM THE BASIS OF DESIGN. RESPONSIBILITY FOR STRUCTURAL RIGGING AND RELATED ENGINEERING IS BY OTHERS. ALL MEANS, METHODS, AND MATERIALS TO MEET OR EXCEED APPLICABLE CODES AND INDUSTRY STANDARDS.

CLIENT LOGO

CLIENT CONTACT
-

REVISIONS

Rev:	Date:	By:	Description:

PROJECT NAME
EXETER TWP ESF

FACILITY ADDRESS

DESIGNED BY	D&E CHECKED BY
MS	
DRAFTED BY	DATE
JE	09/11/2026
SCALE	ORIGINAL PAPER SIZE
N/A	N/A

SHEET TITLE
AV FLOORPLAN

FILE NAME
5372_ExeterESF_AV_Floorplan

AV02

PROJECT ID	SHEET NO.
ii-5372	2 OF 2

MW STUDIOS
ARCHITECTURE + MASTER PLANNING
8098 SANDPIPER CIR, SUITE H
NOTTINGHAM, MD 21236
410-344-1460
INFO@MWSARCH.COM
WWW.MWSARCH.COM

SEAL:

EXETER TOWNSHIP
EMERGENCY SERVICES FACILITY
70 GIBRALTAR ROAD
READING, PA 19606

PROJECT NUMBER: 25-049

SUBMISSION:
BID SET

ORIGINAL ISSUE DATE:
10/01/2026

SHEET REVISION SCHEDULE:
No. DATE

AV FLOOR PLAN

SHEET NUMBER:
AV02

10/1/2026 8:51:08 PM

ALL DRAWINGS ARE PROTECTED BY FEDERAL COPYRIGHT BY MANNS WOODWARD STUDIOS, INC. AND CAN NOT BE REPRODUCED OR MODIFIED IN ANY MANNER WITHOUT WRITTEN PERMISSION. DOCUMENTS MAY NOT BE USED IN PART OR WHOLE TO DEVELOP THE DESIGN OF ANOTHER BUILDING WITHOUT EXPRESS WRITTEN PERMISSION BY MANNS WOODWARD STUDIOS.

STUDIOS
ARCHITECTURE + MASTER PLANNING
8098 SANDPIPER CIR, SUITE H
NOTTINGHAM, MD 21236
☎ 410-344-1460
✉ INFO@MWSARCH.COM
WWW.MWSARCH.COM

SEAL:

Firehouse Alerting Project Notes

Electrical Contractor Scope of Work:
1. Provide permit if needed
2. Provide wire
3. Provide wire runs per NFPA 70 code
4. All wire runs to be clearly tagged & labeled
5. Provide all wiring materials (hangars, conduit, surface mold,wire ties, boxes, etc…)
6. Provide high voltage electrical relay connections if needed
7. Provide other high voltage connections if needed
8. Provide electrical power where needed (dedicated/undedicated)
9. Provide complete system installation (including head end equipment)
10. Provide as-built drawings after installation
11. Provide 1 year of warranty on labor
12. Provide an on-site representative when final connections are made

APS Scope of Work:
1. Provide shop drawings of field devices
2. Provide system components
3. Provide technical support to electrical contractor: 410-239-4644
4. Provide all programming and calibrations
5. Provide end user training
6. Provide a 3-year warranty on all APS supplied devices – Installer may assist APS for payment to make repairs/replacements as needed

Wire Specifications:

Supplier; Windy City Wire or equal approved by APS

Non-Plenum

Product Number	Connectors	Color	Length
28100	16/2 STR	Grey	1000'
28300	16/4 STR	Grey	1000'
14100	18/2 STR OAS	Grey	1000'
2391	18/6 STR	White	1000'
7756010-FP	CAT6	Red	1000'

Plenum

Product Number	Connectors	Color	Length
1360	16/2 STR	White	1000'
1380	16/4 STR	White	1000'
2320	18/2 STR OAS	White	1000'
2351	18/6 STR	Grey	1000'
CAT6P-RED	CAT6	Red	1000'

Speaker Information:

Speaker Type	Common Wire Color	70V Wire Color	Wattage
8" Round CSS8008 Ceiling Speaker	Black	Brown	2.5
Exterior Loudspeaker		Switch Position 4	7.5
SM4T Bathroom Speaker		Rotary Switch w/ Jumper set to 70V.	1.0
MB8TSL Metal Wall Mount Speaker	Black	Green	2.0
Soundsphere Speaker	Black	Purple	7.5

LED Speaker Type	Common Audio	70V Audio	LED Common Wire	LED Power
8" Round CSS8008 Ceiling Speaker	Black	Brown	Black	Red

Wire Length to leave in boxes for device connection: 16"

Wire Terminations:
CAT6 Cables = RJ45 Class B connections

Mounting heights: All are A.F.F. to bottom of the box
LCDs, LEDs, and power outlets - 80"
Apparatus Bay LCDs & power outlets - 95"
Volume Controls, Alert Selectors, Resets, & Who's In Reader - 48"
APS IP alerting controller – Dimensions 18" high, 15" wide, 4½" deep - 48 inches A.F.F.
Bogen #MB8STL wall mount speaker 11 5/8" X 11 5/8" - 78 inches A.F.F. to bottom of speaker
Exterior Speaker shall be hung under soffit where possible
Apparatus bay speakers to be hung 16' A.F.F.
Gas disconnect – located at the solenoid
Multi-Colored Lights (MCL) - 84" A.F.F. or Ceiling Mounted (See drawing detail pages)

Device Wire Size
All speakers (except LED speakers), and LED Clusters =16/2 STR
Reset Buttons, Doorbells = 18/2 STR OAS
LED Speakers, Volume Controls = 16/4 STR
Stove Resets = 18/2 STR OAS & 16/2 STR
Gas Shutoffs and Stove Shutoffs = 16/2 STR
Stacklights, and Multi-Color Lights = 18/6 STR
Toggle Alert Selectors = 16/4 STR or 16/2 STR
Momentary Alert Selectors = 18/2 STR OAS, one wire per button on the gang plate
CAD LCD Displays, and Scrolling LEDs = Cat6 (not to exceed 300')
RIB Relays (Lighting) = 16/2 STR

Zones:
Devices will be zoned as required by the customer and shown on this drawing.

Required boxes:

35w volume control – Double gang 3" deep box
10w volume control – Single gang 3" deep box
Reset button – Single gang 3" deep box
Alert selector – Single gang 3" deep box
Stove reset – Single gang 3" deep box
Doorbells- Single gang 3" deep box
Who's In Remote Reader - Double gang 3" deep box

Radio Connections:

Fire department to provide an antenna and line level output for fire station audio.

CAT6 Network Cable:

Each CAT6 network cable must be homerun from PoE switch to each alerting display.
Maximum length for CAT6 network cable is 100 meters.

Speakers:
Speakers provided by APS are 70V commercial speakers only. 8-ohm speakers can not be used for proper operation of the system.

Devices and Equipment Provided by Others:

All existing or new devices and equipment provided by others must be approved, in writing, by APS prior to being connected to any APS alerting system. APS will not support or warranty devices or equipment provided by others.

Drawing Approved:

_____
Customer Signature Print Name

Date:_____

I have thoroughly reviewed each page of this drawing and confirm that the Concept of Operations (FSA-2), and devices shown, fully meets all customer requested functionality and requirements.

CONTROLLER WIRING

INPUTS – SHIELDED WIRE ONLY

I1 = RF FIRE
I2 = RF EMS
I3 = NOT USED
I4 = NOT USED
I5 = NOT USED
I6 = NOT USED
I7 = NOT USED
I8 = NOT USED
I9 = NOT USED
I10 = NOT USED
I11 = NOT USED
I12 = NOT USED
I13 = NOT USED
I14 = NOT USED
I15 = AC SUPERVISORY
I16 = BATTERY SUPERVISORY

OUTPUTS

O1 = NOT USED
O2 = NOT USED
O3 = NOT USED
O4 = NOT USED
O5 = NOT USED
O6 = NOT USED
O7 = NOT USED
O8 = NOT USED
O9 = NOT USED
O10 = NOT USED
O11 = NOT USED
O12 = NOT USED
O13 = NOT USED
O14 = Dry Contact
O15 = SUPERVISORY RELAY
O16 = STOVE DISCONNECT
O17 = STOVE DISCONNECT LAMP

WIRELESS INPUTS

INPUTS

W1 = NOT USED
W2 = NOT USED
W3 = NOT USED
W4 = NOT USED
W5 = NOT USED
W6 = NOT USED

APS Firehouse Alerting
Fire Station Alerting System Solutions
RF and Network Alerting
(410) 230-4644 - FAX (410) 374-8870
115 Airport Drive, Suite 170
Westminster, MD 21157
www.firehousealerting.com

DRAWING TITLE: *FHA Notes*
JOB NAME: *Exeter TSWP FD rev 09292026.*
JOB ADDRESS: *x*
CITY, STATE: *x*
DATE: *9-30-26*
SCALE: *NOT TO SCALE*
DRAWN BY:
APS APPROVAL:
SHEET NO. **FSA-1**

EXETER TOWNSHIP
EMERGENCY SERVICES FACILITY
70 GIBRALTAR ROAD
READING, PA 19606

PROJECT NUMBER: 25-049

SUBMISSION:
BID SET

ORIGINAL ISSUE DATE:
10/01/2026

SHEET REVISION SCHEDULE:
No. DATE

FHA NOTES

SHEET NUMBER:
FSA-1

10/1/2026 8:51:09 PM

ALL DRAWINGS ARE PROTECTED BY FEDERAL COPYRIGHT BY MANNS WOODWARD STUDIOS, INC. AND CAN NOT BE REPRODUCED OR MODIFIED IN ANY MANNER WITHOUT WRITTEN PERMISSION. DOCUMENTS MAY NOT BE USED IN PART OR WHOLE TO DEVELOP THE DESIGN OF ANOTHER BUILDING WITHOUT EXPRESS WRITTEN PERMISSION BY MANNS WOODWARD STUDIOS.

STUDIOS
ARCHITECTURE + MASTER PLANNING
8098 SANDPIPER CIR, SUITE H
NOTTINGHAM, MD 21236
☎ 410-344-1460
✉ INFO@MWSARCH.COM
WWW.MWSARCH.COM

SEAL:

EXETER TOWNSHIP
EMERGENCY SERVICES FACILITY
70 GIBRALTAR ROAD
READING, PA 19606

PROJECT NUMBER: 25-049

SUBMISSION:
BID SET

ORIGINAL ISSUE DATE:
10/01/2026

SHEET REVISION SCHEDULE:
No. DATE

CONCEPT OF OPERATIONS PG 1

SHEET NUMBER:
FSA-2

10/1/2026 8:51:11 PM

ALERTING DEVICE FUNCTIONALITY AND SYSTEM OPERATIONS

Two-Tone Alerting
- 2-Tone paging is used as one method to alert the station. When implemented with CAD alerting, the 2-Tone alerting is used for alerting redundancy.
- Customer must supply a fire department radio with line level audio output, and external antenna that will be used as the primary audio source.

CAD Alerting
- Data will be received from the customer's CAD system and used to alert the station. CAD alerting based on Unit ID, Incident Type, and Box Area can be configured into an unlimited number of CAD groups.
- Data can be in the form of standard file formats such as XML, JSON, standard print data, SMTP, or SFTP.
- No hardware is required at the Dispatch Center unless a master server implementation is required.
- A persistent, direct CAD interface can be implemented if required by the customer.

Network Requirements
- Up to three (3) local static IP addresses, and one (1) external static IP address must be provided with proper application port configurations.
- The external IP provides APS access to the Alerting Controller to provide 24/7 monitoring, customer support, configuration changes, and software updates.
- Customer network security requirements can be coordinated through APS.

Station Zoning
- Stations are typically zoned by functional areas such as: apparatus bays, bunkrooms, living, office, and training areas.
- Zones will be designed according to customer requirements and as shown in this drawing.
- Alerting and lighting can be controlled individually within each Zone.

Ramped Audio
- APS utilizes ramped audio to provide the initial station alert to provide a heart-healthy method of alerting.
- Custom customer audio files can be used.

Volume Controls
- APS utilizes commercial volume controls with priority functionality. When the Alerting Controller is activated, individual volume control settings will be bypassed, and ramped alert audio will be delivered up to the maximum volume.

Bunkroom and Egress Lighting
- APS LED Speaker Lights, and APS LED Cluster Lights, provide red, ramped, low-level lighting in bunkroom areas and egress corridors.
- LED lighting will ramp over a five-second period and will provide low-level, heart-healthy lighting to allow personnel time to adjust to normal lighting levels during the initial alerting process.
- Alternative colors are available.

Doorbells
- Doorbells are located as shown on the design drawing.
- When pressed, doorbells will sound a custom audio tone and recorded voice indicated which doorbell was activated.
- The activated doorbell location will be shown on the station alerting displays.
- Video from compatible cameras at the doorbell location can be shown on the station alerting displays.

Manual Alert Button
- One -button manual alerts provide a means to internally alert station personnel in circumstances where an emergency is reported over the phone, or in-person at the station.
- Buttons can be strategically mounted at any location within the station.
- Custom audio can be assigned to each button.

Alerting Displays
- Commercial alerting displays are strategically located throughout the stations. 43-inch displays are normally located in administrative or living areas; 55-inch displays are normally located in apparatus bays.
- Alerting Displays show non-emergency, situational awareness information while in non-emergency mode. In emergency mode, alerting displays show incident information to include: incident type, units due, incident address, box or map area, and CAD comments. A route map or location map is displayed.

Reset Button
- Reset buttons are located throughout the station and are used to reset the station alert audio and lighting within a zone or throughout the station.
- Station audio and lighting will automatically reset after a user-selectable time if a reset button is not pressed or installed.

Audio and Lighting Disconnect
- A speaker disconnect switch will disconnect the audio to a particular room, area, or zone and acts as a "do not disturb" function. They are typically installed in conference or training rooms.

User Interface
- A browser-based user interface is provided on all APS systems. The interface allows the customer and APS technical staff to access the system, troubleshoot, make configuration changes, and test devices and operation of the system.
- The customer is responsible for providing all computer hardware and support to be used for displaying the Alerting Controller user interface. APS does not provide computer or peripheral hardware of support.

Multi-Color Lights
- A four(4)-lens LED multi-color lights are installed throughout the station. Multi-color lights provide visual notification for unit or incident type alerting. Lights are activated wirelessly.

Alert Selector Buttons
- Alert selectors are used in individual bunkrooms and enable personnel the ability to select which units or incident groups get alerted.
- Alert buttons allow personnel assigned to a particular unit to not be disturbed unless required to respond.

LED Stack Lights
- LED stack lights are typically used in apparatus bay areas to provide visual notifications for units alerted.
- LED stack lights can have up to four(4) lenses. Typical colors include, red, blue, green, and amber.

Fitness Emergency Button
- Installed in the gym or fitness room and is used to internally alert station personnel of a medical emergency involving fire/rescue members.
- The emergency button will activate alert lighting, bypass volume control settings, and sound a custom alert audio. The audio will loop until acknowledged by pressing any station reset button.

APS Firehouse Alerting
Fire Station Alerting System Solutions
RF and Network Alerting
(410) 239-4644 - FAX (410) 374-4870
115 Airport Drive, Suite 170
Westminster, MD 21157
www.firehousealerting.com

DRAWING TITLE: *Concept of Operations Pg 1*	
JOB NAME: *Exeter TSWP FD rev 0929206.*	
JOB ADDRESS: *x*	
CITY, STATE: *x*	
DATE: *9-30-26*	SHEET NO.
SCALE: *NOT TO SCALE*	FSA-2
DRAWN BY:	
APPROVED BY:	

ALL DRAWINGS ARE PROTECTED BY FEDERAL COPYRIGHT BY MANNS WOODWARD STUDIOS, INC. AND CAN NOT BE REPRODUCED OR MODIFIED IN ANY MANNER WITHOUT WRITTEN PERMISSION. DOCUMENTS MAY NOT BE USED IN PART OR WHOLE TO DEVELOP THE DESIGN OF ANOTHER BUILDING WITHOUT EXPRESS WRITTEN PERMISSION BY MANNS WOODWARD STUDIOS.

STUDIOS
ARCHITECTURE + MASTER PLANNING
8098 SANDPIPER CIR, SUITE H
NOTTINGHAM, MD 21236
☎ 410-344-1460
✉ INFO@MWSARCH.COM
WWW.MWSARCH.COM

SEAL:

EXETER TOWNSHIP
EMERGENCY SERVICES FACILITY
70 GIBRALTAR ROAD
READING, PA 19606

PROJECT NUMBER: 25-049

SUBMISSION:
BID SET

ORIGINAL ISSUE DATE:
10/01/2026

SHEET REVISION SCHEDULE:
No. DATE

CONCEPT OF OPERATIONS PG 2

SHEET NUMBER:
FSA-3

10/1/2026 8:51:12 PM

ALERTING DEVICE FUNCTIONALITY AND SYSTEM OPERATIONS

Relay Controls and Inputs
- The APS alerting controller provides 12-volt, 16 inputs, and 16 outputs to control external functions.
- No external controls have been provided or required by this customer per the government-provided design drawing. Control of apparatus bay doors, internal lighting, stove disconnect circuits, etc. can be added as needed.

Stove Disconnect
- Electric and gas cooking equipment will be disconnected when a station alert is received per customer requirements.
- Gas stoves with pilot lights can NOT be connected to a stove disconnect circuit.
- A means to disconnect the gas by a powered valve must be installed to disconnect the gas service. APS must be contacted to assure the proper type of gas valve is installed. The gas valve will be provided and installed by others.
- Connection to a new stove system must allow for dry enclosure input from APS alerting controller to work in conjuncture with the stove's hood system panel.
- Electrician will be responsible for installing the required electrical circuits. APS will provide RIB style relays to connect to the disconnect circuit.

Radio and Scanner Audio – Customer Responsibilities
- The Customer must provide a fire department radio or other acceptable source to be the primary dispatch audio used for station alerting.
- The Customer can provide scanner(s) to provide audio for other channels or talk-groups.
- All radios and scanners must be in a location approved by APS, and as shown in this design drawing. The customer may be required to relocate existing audio sources to a location specified by APS.
- The Customer must provide external antenna for all audio sources when required for proper reception.
- Audio sources must provide line level output audio.

Overhead Paging – Customer Responsibilities
- The Customer must provide a phone paging module with a contact closure to be used for overhead paging.
- The paging module will be connected to the APS Alerting Controller causing the audio to ramp to full volume during an overhead announcement.
- Paging module must provide audio line-level output to integrate with station alerting public address system.
- If the module is provided by APS, the make and model of the paging adapter will be shown in this drawing and approved by the customer.

Network and Power Interruptions
- The alerting system will monitor for power and network interruptions.
- Should an interruption occur, the APS Trouble Strobe will activate, and an automated voice announcement will be heard over the station speakers.
- Customer SMS and/or e-mail notifications can be configured for internal notification purposes.

APS Firehouse Alerting
Fire Station Alerting System Solutions
RF and Network Alerting
(410) 239-4644 - FAX (410) 374-8870
115 Airport Drive, Suite 170
Westminster, MD 21157
www.firehousealerting.com

DRAWING TITLE: *Concept of Operations Pg 2*	
JOB NAME: *Exeter TSWP FD rev 09292026.*	
JOB ADDRESS: *x*	
CITY, STATE: *x*	
DATE: *9-30-26*	SHEET NO.
SCALE: *NOT TO SCALE*	
DRAWN BY:	**FSA-3**
APPROVED BY:	

ALL DRAWINGS ARE PROTECTED BY FEDERAL COPYRIGHT BY MANNS WOODWARD STUDIOS, INC. AND CAN NOT BE REPRODUCED OR MODIFIED IN ANY MANNER WITHOUT WRITTEN PERMISSION. DOCUMENTS MAY NOT BE USED IN PART OR WHOLE TO DEVELOP THE DESIGN OF ANOTHER BUILDING WITHOUT EXPRESS WRITTEN PERMISSION BY MANNS WOODWARD STUDIOS.

Symbol	Name	Mounting	Wire	Additional Notes / Comments
APS	APS Alerting Controller	Rack or Wall Mounted	N/A	
	APS Doorbell	Flush or surface-mounted in single-gang box	18/2 OAS	Each doorbell is home run. Connect each input to Alerting Controller per FSA-1.
1A 2A	1-Button or 2-Button Manual Alert	Flush or surface mounted in single-gang box	18/2 OAS	For a two-button manual alert, one 18/2 OAS wire is required for each button. Connect each to input in Alerting Controller per FSA-1.
3S	3-Button Alert Selector	Mounted in single-gang box	16/4	See device wiring supplementary for wiring details. Custom alert selector panels are available upon request.
Switch	APS Switch	Rack-mounted or on shelf in rack depending upon type of switch required	N/A	Standard switch used by APS is a 16-port rack-mounted switch.
ME	Medical Emer Button	Flush or surface-mounted in single-gang box	18/2 OAS	An APS Reset Button must be pressed to reset Emergency Button audio.
	Stove Reset/ Disconnect	Stove Reset is flush or surface-mounted in single-gang box	18/2 OAS, 16/2	Stove disconnect is a 120V gas valve. Disconnect can not be used on stove with pilot lights. Electrical circuit to stove must disconnect with gas. **Gas valve is provided and installed by others.**
SD AD	Speaker/Audio Disconnect	Flush or surface-mounted in single-gang box	16/2	
EP	Emergency Phone	Mounted per manufacturer instructions	18/2 OAS	Emergency phone must provide a 12V contact closure to APS Alerting Controller.
S	Recessed Ceiling Speaker	Mounted in drop ceiling using a tile-bridge. Backcans provided if required	16/2	8-inch, 70V, 2.5 Watts
LED	APS LED Speaker	Mounted in drop ceiling using a tile-bridge. Backcans provided if required	16/4	8-inch, 70V, 2.5 Watts
BS	Moisture Resistant Bathroom Speaker	Surface mounted	16/2	1.0 Watt
WS WV BX	Metal, Wall Speaker	Surface mounted	16/2	BX – Metal square box speaker. WS/WV – Metal slant wall speaker. WV has built-in volume control. 2.0 Watts - WV has built-in volume control
SS	Omni-Direction Speaker	Surface mounted, or hung 16ft. a.f.f. depending upon installation	16/2	7.5 Watts, **When hanging omni-directional speakers, they must be lowered to 16 ft above the finished floor, unless otherwise approved and noted by APS.**
R B	Strobe Light	Surface mounted	16/2	Available in multiple colors per customer requirements.
	APS LED Cluster Light	Light is mounted in a standard 4-inch round plate	16/2	Will illuminate an approx 10 x 10 square foot area.
M C L	Multi-Color LED Wireless Lighthead	Ceiling or wall mounted in a single-gang box	16/2	Lights are wired in series for power. Lights are activated wireless through transmitter located in rack.
4 S L	Multi-Color LED Stacklight	Surface mounted horizontally, or vertically using a 90-degree elbow	18/6	Lights are wired in series. Only one(1), 18/6 wire is required.
ES ES	Bullhorn style exterior speaker, or other style exterior speaker	Bullhorn style exterior speakers are typically mounted under soffit. For other speakers, see specific mounting location and instructions.	16/2	See speaker details for specific wattage tap.
	APS RIB Style Relay	Mounted in standard 1900 box	16/2	Relays are used to control stove disconnect, and other 120V devices.
!	APS Trouble Strobe	Ceiling or Wall Mounted	16/2	Connected to Output 15 of Alerting Controller.

APS Firehouse Alerting
Fire Station Alerting System Solutions
RF and Network Alerting
(410) 239-4644 – FAX (410) 374-8870
115 Airport Drive, Suite 170
Westminster, MD 21157
www.firehousealerting.com

DRAWING TITLE: *Symbol Sheet Page 1*
JOB NAME: *Exeter TSWP FD rev 09292026.*
JOB ADDRESS: *x*
CITY, STATE: *x*
DATE: *9-30-26*
SCALE: *NOT TO SCALE*
DRAWN BY:
APPROVED BY:
SHEET NO. **FSA-4**

STUDIOS
ARCHITECTURE + MASTER PLANNING
8098 SANDPIPER CIR, SUITE H
NOTTINGHAM, MD 21236
☎ 410-344-1460
INFO@MWSARCH.COM
WWW.MWSARCH.COM

SEAL:

EXETER TOWNSHIP
EMERGENCY SERVICES FACILITY
70 GIBRALTAR ROAD
READING, PA 19606

PROJECT NUMBER: 25-049

SUBMISSION:
BID SET

ORIGINAL ISSUE DATE:
10/01/2026

SHEET REVISION SCHEDULE:
No. DATE

SYMBOL SHEET PAGE 1

SHEET NUMBER:
FSA-4

10/1/2026 8:51:13 PM

ALL DRAWINGS ARE PROTECTED BY FEDERAL COPYRIGHT BY MANNS WOODWARD STUDIOS, INC. AND CAN NOT BE REPRODUCED OR MODIFIED IN ANY MANNER WITHOUT WRITTEN PERMISSION. DOCUMENTS MAY NOT BE USED IN PART OR WHOLE TO DEVELOP THE DESIGN OF ANOTHER BUILDING WITHOUT EXPRESS WRITTEN PERMISSION BY MANNS WOODWARD STUDIOS.

Symbol	Name	Mounting	Wire	Additional Notes / Comments
CAD LED 4T	Commercial Alerting Display	Wall mounted using a full-tilt or full-motion bracket. See detail pages for specified mounting bracket. Mounting height to be 78-inches a.f.f. in admin areas, and 96-inches min a.f.f. in apparatus bays.	CAT 6	A 120V, duplex outlet is required at each display location. A RJ-45 network jack is required at each display location. Alerting displays can be wired in series or home run. See wiring detail pages wiring method.
	APS Reset Button	Wall-mounted at 48-inches a.f.f.	18/2 OAS	
VC 10 VC 35	10W/35W Volume Controls	Wall-mounted at 48-inches a.f.f.	16/4	12V volume controls with priority bypass. 16/4 wire from APS alerting controller to primary volume control within each identified zone. Volume controls in each zone can be wired in series using 16/4 wire.

Special Notes for Installer and Customer – Fire Department Audio, Radio, Antenna, and Network Connections

Fire Department Audio and Radio:

- Customer must provide an fire department radio with line level audio output that will be used to supply the primary dispatch audio through the station speakers.
- Customer must provide an external antenna, cable and any required cable splitters for the fire department radio or other audio sources.
- Installer must run a 16/2 stranded wire from the fire department provided radio to the APS Alerting Controller if located in a different room from one another.

Network Connections

- Installer must run three, CAT6 network cables from the customer's network switch to the APS Alerting Controller if located in a different room from one another.

Phone System Connections

- Customer must provide a phone system paging module that provides a 12V contact closure or a normally open, Form C contact closure to the APS Alerting Controller if paging over the station alerting speakers is required by the customer.
- Installer must run a 18/2 OAS stranded wire from the phone system paging module to the APS Alerting Controller if located in a different room from one another.

APS Firehouse Alerting
Fire Station Alerting System Solutions
RF and Network Alerting
(410) 230-4644 – FAX (410) 374-8870
115 Airport Drive, Suite 170
Westminster, MD 21157
www.firehousealerting.com

DRAWING TITLE: *Symbol Sheet Page 2*

JOB NAME: *Exeter TSWP FD rev 09292026.*

JOB ADDRESS: *x*

CITY, STATE: *x*

DATE: *9-30-26* SHEET NO.

SCALE: *NOT TO SCALE*

DRAWN BY:

APPROVED BY: **FSA-5**

MW STUDIOS
ARCHITECTURE + MASTER PLANNING
8098 SANDPIPER CIR, SUITE H
NOTTINGHAM, MD 21236
☎ 410-344-1460
INFO@MWSARCH.COM
WWW.MWSARCH.COM

SEAL:

EXETER TOWNSHIP
EMERGENCY SERVICES FACILITY
70 GIBRALTAR ROAD
READING, PA 19606

PROJECT NUMBER: 25-049

SUBMISSION:
BID SET

ORIGINAL ISSUE DATE:
10/01/2026

SHEET REVISION SCHEDULE:
No. DATE

SYMBOL SHEET PAGE 2

SHEET NUMBER:

FSA-5

10/1/2026 8:51:14 PM

ALL DRAWINGS ARE PROTECTED BY FEDERAL COPYRIGHT BY MANNS WOODWARD STUDIOS, INC. AND CAN NOT BE REPRODUCED OR MODIFIED IN ANY MANNER WITHOUT WRITTEN PERMISSION. DOCUMENTS MAY NOT BE USED IN PART OR WHOLE TO DEVELOP THE DESIGN OF ANOTHER BUILDING WITHOUT EXPRESS WRITTEN PERMISSION BY MANNS WOODWARD STUDIOS.

STUDIOS
ARCHITECTURE + MASTER PLANNING
8098 SANDPIPER CIR, SUITE H
NOTTINGHAM, MD 21236
☎ 410-344-1460
✉ INFO@MWSARCH.COM
WWW.MWSARCH.COM

SEAL:

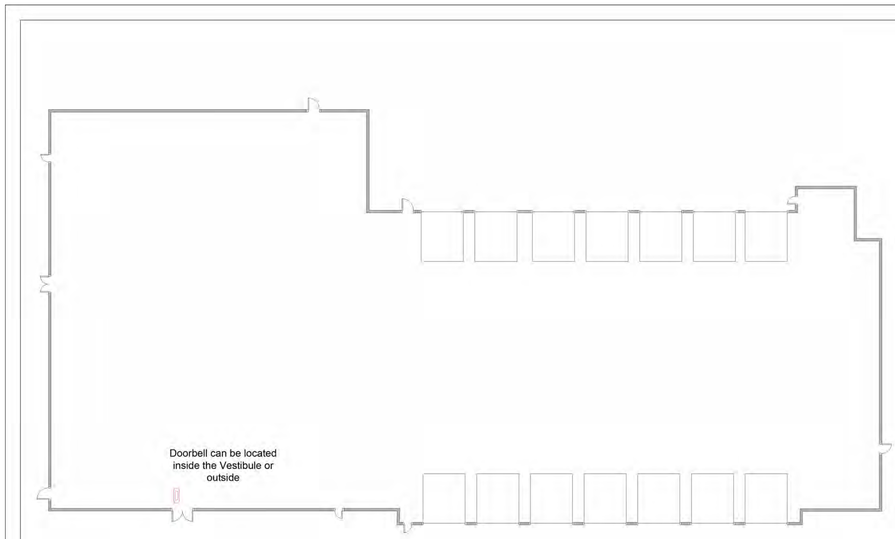

	Device	Mount
	Doorbell	48" AFF
VC 10 / VC 35	Volume Control 10 / 35 Watt	48" AFF
3S	3 Button Alert Selector	48" AFF
2A	2 Button Manual Alert	48" AFF
!	Emergency Alert	48" AFF
	Reset Button	48" AFF
SR	Stove Reset	48" AFF
K	Stove Disconnect	Located at Solenoid
S	8" 70V Speaker, 2.5 Watt	Ceiling
BS	Bathroom Speaker, 1.0 Watt	Ceiling
WS	Wall Speaker, 2.0 Watt	78" AFF
SS	Omnidirectional, 7.5 Watt	192" AFF
ES	External Speaker, 7.5 Watt	Under Soffit
LED	8" LED Ceiling Speaker, 2.5 Watt	Ceiling
R B	Colored LED Strobe	Ceiling
*	Red LED Cluster Light	Ceiling
4 S L	Multi-Color Light	Ceiling Wall
Switch	APS Switch	Rack
	RIB Relay	Above Ceiling
CAD LED 4"	CAD 43/55" LED Display	78" AFF* See FHA Notes
FAST	FAST Server	Rack
!	FHA Trouble Strobe	Ceiling
APS	APS Alerting Controller	Rack

Wire Color Legend

16/2 -
16/4 -
18/2 OAS -
18/6 -
Cat6 -
22/6 -

APS Firehouse Alerting
Fire Station Alerting System Solutions
RF and Network Alerting
(410) 239-4644 - FAX (410) 374-8870
115 Airport Drive, Suite 170
Westminster, MD 21157
www.firehousealerting.com

DRAWING TITLE:
Exterior Devices

JOB NAME:
Exeter TSWP FD rev 09292026.

JOB ADDRESS:
x

CITY, STATE:
x

DATE: *9-30-26*
SCALE: *NOT TO SCALE*
DRAWN BY:
APPROVED BY:

SHEET NO.
FSA-6

EXETER TOWNSHIP
EMERGENCY SERVICES FACILITY
70 GIBRALTAR ROAD
READING, PA 19606

PROJECT NUMBER: 25-049

SUBMISSION:
BID SET

ORIGINAL ISSUE DATE:
10/01/2026

SHEET REVISION SCHEDULE:
No. DATE

EXTERIOR DEVICES

SHEET NUMBER:
FSA-6

10/1/2026 8:51:16 PM

ALL DRAWINGS ARE PROTECTED BY FEDERAL COPYRIGHT BY MANNS WOODWARD STUDIOS, INC. AND CAN NOT BE REPRODUCED OR MODIFIED IN ANY MANNER WITHOUT WRITTEN PERMISSION. DOCUMENTS MAY NOT BE USED IN PART OR WHOLE TO DEVELOP THE DESIGN OF ANOTHER BUILDING WITHOUT EXPRESS WRITTEN PERMISSION BY MANNS WOODWARD STUDIOS.

MW STUDIOS
ARCHITECTURE + MASTER PLANNING
8098 SANDPIPER CIR, SUITE H
NOTTINGHAM, MD 21236
☎ 410-344-1460
✉ INFO@MWSARCH.COM
WWW.MWSARCH.COM

SEAL:

Note: All omni-directional speakers must be lowered to 16 ft. above finished floor, unless they are required to be surface-mounted or otherwise approved by APS, and noted on this drawing.

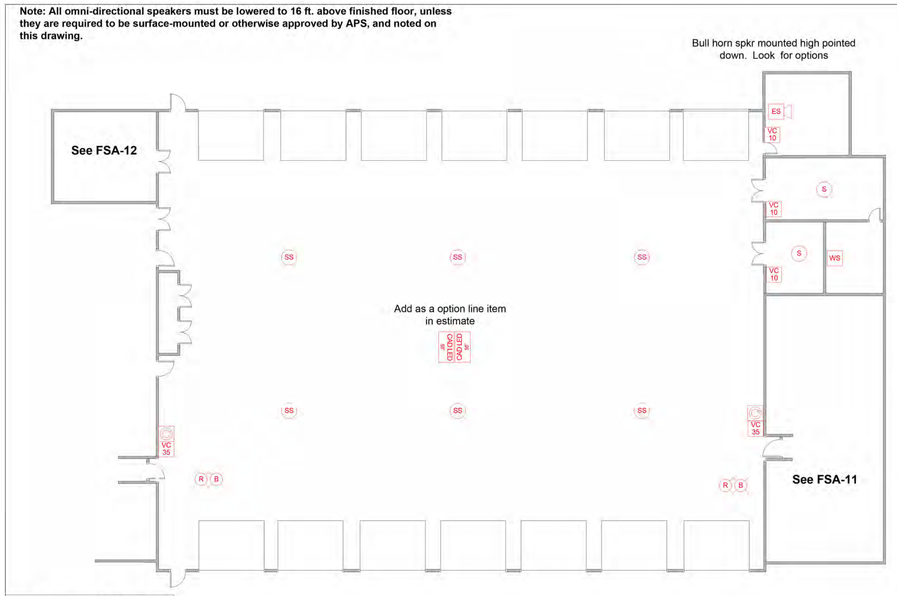

Device		Mount
	Doorbell	48" AFF
VC 10 / VC 35	Volume Control 10 / 35 Watt	48" AFF
3S	3 Button Alert Selector	48" AFF
2A	2 Button Manual Alert	48" AFF
!	Emergency Alert	48" AFF
	Reset Button	48" AFF
RST	Stove Reset	48" AFF
K	Stove Disconnect	Located at Solenoid
S	8" 70V Speaker, 2.5 Watt	Ceiling
BS	Bathroom Speaker, 1.0 Watt	Ceiling
WS	Wall Speaker, 2.0 Watt	78" AFF
SS	Omnidirectional, 7.5 Watt	192" AFF
ES	External Speaker, 7.5 Watt	Under Soffit
LED	8" LED Ceiling Speaker, 2.5 Watt	Ceiling
R / B	Colored LED Strobe	Ceiling
*	Red LED Cluster Light	Ceiling
4 S L	Multi-Color Light	Ceiling Wall
Switch	APS Switch	Rack
	RIB Relay	Above Ceiling
CAD LED 43"	CAD 43/55" LED Display	78" AFF* See FVA Notes
FAST	FAST Server	Rack
!	FHA Trouble Strobe	Ceiling
APS	APS Alerting Controller	Rack

Wire Color Legend

- 16/2 -
- 16/4 -
- 18/2 OAS -
- 18/6 -
- Cat6 -
- 22/6 -

Duplex electrical outlet and RJ45 jack required at all Alerting Display locations

APS Firehouse Alerting
Fire Station Alerting System Solutions
RF and Network Alerting
(410) 239-4644 - FAX (410) 374-8870
115 Airport Drive, Suite 170
Westminster, MD 21157
www.firehousealerting.com

DRAWING TITLE: *Apparatus Bays*

JOB NAME: *Exeter TSWP FD rev 09292026.*

JOB ADDRESS: *x*

CITY, STATE: *x*

DATE: *9-30-26* | SHEET NO.

SCALE: *NOT TO SCALE*

DRAWN BY:

APPROVED BY:

FSA-7

EXETER TOWNSHIP
EMERGENCY SERVICES FACILITY
70 GIBRALTAR ROAD
READING, PA 19606

PROJECT NUMBER: 25-049

SUBMISSION:
BID SET

ORIGINAL ISSUE DATE:
10/01/2026

SHEET REVISION SCHEDULE:
No. DATE

APPARATUS BAYS

SHEET NUMBER:

FSA-7

10/1/2026 8:51:17 PM

ALL DRAWINGS ARE PROTECTED BY FEDERAL COPYRIGHT BY MANNS WOODWARD STUDIOS, INC. AND CAN NOT BE REPRODUCED OR MODIFIED IN ANY MANNER WITHOUT WRITTEN PERMISSION. DOCUMENTS MAY NOT BE USED IN PART OR WHOLE TO DEVELOP THE DESIGN OF ANOTHER BUILDING WITHOUT EXPRESS WRITTEN PERMISSION BY MANNS WOODWARD STUDIOS.

STUDIOS
ARCHITECTURE + MASTER PLANNING
8098 SANDPIPER CIR, SUITE H
NOTTINGHAM, MD 21236
☎ 410-344-1460
✉ INFO@MWSARCH.COM
WWW.MWSARCH.COM

SEAL:

EXETER TOWNSHIP
EMERGENCY SERVICES FACILITY
70 GIBRALTAR ROAD
READING, PA 19606

PROJECT NUMBER: 25-049

SUBMISSION:
BID SET

ORIGINAL ISSUE DATE:
10/01/2026

SHEET REVISION SCHEDULE:
No. **DATE**

LIVING AREA

SHEET NUMBER:
FSA-8

10/1/2026 8:51:18 PM

Wire Color Legend

16/2 -
16/4 -
18/2 OAS -
18/6 -
Cat6 -
22/6 -

	Device	Mount
	Doorbell	48" AFF
VC 10 / VC 35	Volume Control 10 / 35 Watt	48" AFF
3S	3 Button Alert Selector	48" AFF
2A	2 Button Manual Alert	48" AFF
!	Emergency Alert	48" AFF
	Reset Button	48" AFF
	Stove Reset	48" AFF
X	Stove Disconnect	Located at Solenoid
S	8" 70V Speaker, 2.5 Watt	Ceiling
BS	Bathroom Speaker, 1.0 Watt	Ceiling
WS	Wall Speaker, 2.0 Watt	78" AFF
SS	Omnidirectional, 7.5 Watt	192" AFF
ES	External Speaker, 7.5 Watt	Under Soffit
LED	8" LED Ceiling Speaker, 2.5 Watt	Ceiling
R / B	Colored LED Strobe	Ceiling
	Red LED Cluster Light	Ceiling
4 / B / L	Multi-Color Light	Ceiling Wall
Switch	APS Switch	Rack
	RIB Relay	Above Ceiling
CAD LED 43"	CAD 43/55" LED Display	78" AFF* See FHA Notes
FAST	FAST Server	Rack
!	FHA Trouble Strobe	Ceiling
APS	APS Alerting Controller	Rack

APS Firehouse Alerting
Fire Station Alerting System Solutions
RF and Network Alerting
(410) 239-4644 - FAX (410) 374-8870
115 Airport Drive, Suite 170
Westminster, MD 21157
www.firehousealerting.com

DRAWING TITLE: *Living Area*
JOB NAME: *Exeter TSWP FD rev 0929026.*
JOB ADDRESS: *x*
CITY, STATE: *x*
DATE: *9-30-26* SHEET NO.
SCALE: *NOT TO SCALE*
DRAWN BY:
APPROVED BY:
FSA-8

ALL DRAWINGS ARE PROTECTED BY FEDERAL COPYRIGHT BY MANNS WOODWARD STUDIOS, INC. AND CAN NOT BE REPRODUCED OR MODIFIED IN ANY MANNER WITHOUT WRITTEN PERMISSION. DOCUMENTS MAY NOT BE USED IN PART OR WHOLE TO DEVELOP THE DESIGN OF ANOTHER BUILDING WITHOUT EXPRESS WRITTEN PERMISSION BY MANNS WOODWARD STUDIOS.

MW STUDIOS
ARCHITECTURE + MASTER PLANNING
8098 SANDPIPER CIR, SUITE H
NOTTINGHAM, MD 21236
☎ 410-344-1460
✉ INFO@MWSARCH.COM
WWW.MWSARCH.COM

SEAL:

EXETER TOWNSHIP
EMERGENCY SERVICES FACILITY
70 GIBRALTAR ROAD
READING, PA 19606

PROJECT NUMBER: 25-049

SUBMISSION:
BID SET

ORIGINAL ISSUE DATE:
10/01/2026

SHEET REVISION SCHEDULE:
No. DATE

OFFICE AREA

SHEET NUMBER:
FSA-9

10/1/2026 8:51:20 PM

Wire Color Legend

- 16/2 -
- 16/4 -
- 18/2 OAS -
- 18/6 -
- Cat6 -
- 22/6 -

	Device	Mount
	Doorbell	48" AFF
VC 10 / VC 35	Volume Control 10 / 35 Watt	48" AFF
3S	3 Button Alert Selector	48" AFF
2A	2 Button Manual Alert	48" AFF
!	Emergency Alert	48" AFF
	Reset Button	48" AFF
RST	Stove Reset	48" AFF
X	Stove Disconnect	Located at Solenoid
S	8" 70V Speaker, 2.5 Watt	Ceiling
BS	Bathroom Speaker, 1.0 Watt	Ceiling
WS	Wall Speaker, 2.0 Watt	78" AFF
SS	Omnidirectional, 7.5 Watt	192" AFF
ES	External Speaker, 7.5 Watt	Under Soffit
LED	8" LED Ceiling Speaker, 2.5 Watt	Ceiling
R / B	Colored LED Strobe	Ceiling
R	Red LED Cluster Light	Ceiling
4 S L	Multi-Color Light	Ceiling Wall
Switch	APS Switch	Rack
	RIB Relay	Above Ceiling
CAD LED 43"	CAD 43/55" LED Display	78" AFF* See FHA Notes
FAST	FAST Server	Rack
!	FHA Trouble Strobe	Ceiling
APS	APS Alerting Controller	Rack

APS Firehouse Alerting
Fire Station Alerting System Solutions
RF and Network Alerting
(410) 239-4644 - FAX (410) 374-8870
115 Airport Drive, Suite 170
Westminster, MD 21157
www.firehousealerting.com

DRAWING TITLE: *Office Area*
JOB NAME: *Exeter TSWP FD rev 09292026.*
JOB ADDRESS: *x*
CITY, STATE: *x*
DATE: *9-30-26*
SCALE: *NOT TO SCALE*
DRAWN BY:
APPROVED BY:
SHEET NO. **FSA-9**

ALL DRAWINGS ARE PROTECTED BY FEDERAL COPYRIGHT BY MANNS WOODWARD STUDIOS, INC. AND CAN NOT BE REPRODUCED OR MODIFIED IN ANY MANNER WITHOUT WRITTEN PERMISSION. DOCUMENTS MAY NOT BE USED IN PART OR WHOLE TO DEVELOP THE DESIGN OF ANOTHER BUILDING WITHOUT EXPRESS WRITTEN PERMISSION BY MANNS WOODWARD STUDIOS.

STUDIOS
ARCHITECTURE + MASTER PLANNING
8098 SANDPIPER CIR, SUITE H
NOTTINGHAM, MD 21236
☎ 410-344-1460
✉ INFO@MWSARCH.COM
WWW.MWSARCH.COM

SEAL:



Wire Color Legend

- 16/2 -
- 16/4 -
- 18/2 OAS -
- 18/6 -
- Cat6 -
- 22/6 -

Device		Mount
	Doorbell	48" AFF
VC 10 VC 35	Volume Control 10 / 35 Watt	48" AFF
3S	3 Button Alert Selector	48" AFF
2A	2 Button Manual Alert	48" AFF
!	Emergency Alert	48" AFF
	Reset Button	48" AFF
RST	Stove Reset	48" AFF
X	Stove Disconnect	Located at Solenoid
S	8" 70V Speaker, 2.5 Watt	Ceiling
BS	Bathroom Speaker, 1.0 Watt	Ceiling
WS	Wall Speaker, 2.0 Watt	78" AFF
SS	Omnidirectional, 7.5 Watt	192" AFF
ES	External Speaker, 7.5 Watt	Under Soffit
LED	8" LED Ceiling Speaker, 2.5 Watt	Ceiling
R B	Colored LED Strobe	Ceiling
*	Red LED Cluster Light	Ceiling
4 S L	Multi-Color Light	Ceiling Wall
Switch	APS Switch	Rack
	RIB Relay	Above Ceiling
CAD LED 43	CAD 43/55" LED Display	78" AFF* See FHA Notes
FAST	FAST Server	Rack
!	FHA Trouble Strobe	Ceiling
APS	APS Alerting Controller	Rack

APS Firehouse Alerting
Fire Station Alerting System Solutions
RF and Network Alerting
(410) 239-4644 - FAX (410) 374-8870
115 Airport Drive, Suite 170
Westminster, MD 21157
www.firehousealerting.com

DRAWING TITLE: *Bunkroom*

JOB NAME: *Exeter TSWP FD rev 09292026.*

JOB ADDRESS: *x*

CITY, STATE: *x*

DATE: *9-30-26*

SCALE: *NOT TO SCALE*

DRAWN BY:

APPROVED BY:

SHEET NO. **FSA-10**

EXETER TOWNSHIP
EMERGENCY SERVICES FACILITY
70 GIBRALTAR ROAD
READING, PA 19606

PROJECT NUMBER: 25-049

SUBMISSION:
BID SET

ORIGINAL ISSUE DATE:
10/01/2026

SHEET REVISION SCHEDULE:
No. DATE

BUNKROOM

SHEET NUMBER:

FSA-10

10/1/2026 8:51:21 PM

ALL DRAWINGS ARE PROTECTED BY FEDERAL COPYRIGHT BY MANNS WOODWARD STUDIOS, INC. AND CAN NOT BE REPRODUCED OR MODIFIED IN ANY MANNER WITHOUT WRITTEN PERMISSION. DOCUMENTS MAY NOT BE USED IN PART OR WHOLE TO DEVELOP THE DESIGN OF ANOTHER BUILDING WITHOUT EXPRESS WRITTEN PERMISSION BY MANNS WOODWARD STUDIOS.

STUDIOS
ARCHITECTURE + MASTER PLANNING
8098 SANDPIPER CIR, SUITE H
NOTTINGHAM, MD 21236
☎ 410-344-1460
✉ INFO@MWSARCH.COM
WWW.MWSARCH.COM

SEAL:

EXETER TOWNSHIP
EMERGENCY SERVICES FACILITY
70 GIBRALTAR ROAD
READING, PA 19606

PROJECT NUMBER: 25-049

SUBMISSION:
BID SET

ORIGINAL ISSUE DATE:
10/01/2026

SHEET REVISION SCHEDULE:
No. DATE

EMS AREA

SHEET NUMBER:
FSA-11

10/1/2026 8:51:22 PM

Wire Color Legend

16/2 -
16/4 -
18/2 OAS -
18/6 -
Cat6 -
22/6 -

	Device	Mount
	Doorbell	48" AFF
VC 10 / VC 35	Volume Control 10 / 35 Watt	48" AFF
3S	3 Button Alert Selector	48" AFF
2A	2 Button Manual Alert	48" AFF
!	Emergency Alert	48" AFF
	Reset Button	48" AFF
	Stove Reset	48" AFF
X	Stove Disconnect	Located at Solenoid
S	8" 70V Speaker, 2.5 Watt	Ceiling
BS	Bathroom Speaker, 1.0 Watt	Ceiling
WS	Wall Speaker, 2.0 Watt	78" AFF
SS	Omnidirectional, 7.5 Watt	192" AFF
ES	External Speaker, 7.5 Watt	Under Soffit
LED	8" LED Ceiling Speaker, 2.5 Watt	Ceiling
R B	Colored LED Strobe	Ceiling
*	Red LED Cluster Light	Ceiling
4 S L	Multi-Color Light	Ceiling Wall
Switch	APS Switch	Rack
	RIB Relay	Above Ceiling
CAD LED 42"	CAD 43/55" LED Display	78" AFF* See FHA Notes
FAST	FAST Server	Rack
!	FHA Trouble Strobe	Ceiling
APS	APS Alerting Controller	Rack

APS Firehouse Alerting
Fire Station Alerting System Solutions
RF and Network Alerting
(410) 239-4644 - FAX (410) 374-8870
115 Airport Drive, Suite 170
Westminster, MD 21157
www.firehousealerting.com

DRAWING TITLE:
EMS Area

JOB NAME:
Exeter TSWP FD rev 09292026.

JOB ADDRESS:
x

CITY, STATE:
x

DATE: *9-30-26*
SCALE: *NOT TO SCALE*
DRAWN BY:
APPROVED BY:

SHEET NO.
FSA-11

ALL DRAWINGS ARE PROTECTED BY FEDERAL COPYRIGHT BY MANNS WOODWARD STUDIOS, INC. AND CAN NOT BE REPRODUCED OR MODIFIED IN ANY MANNER WITHOUT WRITTEN PERMISSION. DOCUMENTS MAY NOT BE USED IN PART OR WHOLE TO DEVELOP THE DESIGN OF ANOTHER BUILDING WITHOUT EXPRESS WRITTEN PERMISSION BY MANNS WOODWARD STUDIOS.

MW STUDIOS
ARCHITECTURE + MASTER PLANNING
8098 SANDPIPER CIR, SUITE H
NOTTINGHAM, MD 21236
☎ 410-344-1460
✉ INFO@MWSARCH.COM
WWW.MWSARCH.COM

SEAL:

EXETER TOWNSHIP
EMERGENCY SERVICES FACILITY
70 GIBRALTAR ROAD
READING, PA 19606

PROJECT NUMBER: 25-049

SUBMISSION:
BID SET

ORIGINAL ISSUE DATE:
10/01/2026

SHEET REVISION SCHEDULE:
No. DATE

TURNOUT/DECON

SHEET NUMBER:
FSA-12

10/1/2026 8:51:23 PM



	Device	Mount
	Doorbell	48" AFF
VC 10 / VC 35	Volume Control 10 / 35 Watt	48" AFF
3S	3 Button Alert Selector	48" AFF
2A	2 Button Manual Alert	48" AFF
!	Emergency Alert	48" AFF
	Reset Button	48" AFF
	Stove Reset	48" AFF
X	Stove Disconnect	Located at Solenoid
S	8" 70V Speaker, 2.5 Watt	Ceiling
BS	Bathroom Speaker, 1.0 Watt	Ceiling
WS	Wall Speaker, 2.0 Watt	78" AFF
SS	Omnidirectional, 7.5 Watt	192" AFF
ES	External Speaker, 7.5 Watt	Under Soffit
LED	8" LED Ceiling Speaker, 2.5 Watt	Ceiling
R B	Colored LED Strobe	Ceiling
R	Red LED Cluster Light	Ceiling
M S L	Multi-Color Light	Ceiling Wall
Switch	APS Switch	Rack
	RIB Relay	Above Ceiling
CAD LED 43"	CAD 43/55" LED Display	78" AFF* See FHA Notes
FAST	FAST Server	Rack
!	FHA Trouble Strobe	Ceiling
APS	APS Alerting Controller	Rack

Wire Color Legend

16/2 -
16/4 -
18/2 OAS -
18/6 -
Cat6 -
22/6 -

APS Firehouse Alerting
Fire Station Alerting System Solutions
RF and Network Alerting
(410) 239-4644 - FAX (410) 374-4870
115 Airport Drive, Suite 170
Westminster, MD 21157
www.firehousealerting.com

DRAWING TITLE:
Turnout/Decon

JOB NAME:
Exeter TSWP FD rev 09292026.

JOB ADDRESS:
x

CITY, STATE:
x

DATE: *9-30-26*
SCALE: *NOT TO SCALE*
DRAWN BY:
APPROVED BY:

SHEET NO.
FSA-12

ALL DRAWINGS ARE PROTECTED BY FEDERAL COPYRIGHT BY MANNS WOODWARD STUDIOS, INC. AND CAN NOT BE REPRODUCED OR MODIFIED IN ANY MANNER WITHOUT WRITTEN PERMISSION. DOCUMENTS MAY NOT BE USED IN PART OR WHOLE TO DEVELOP THE DESIGN OF ANOTHER BUILDING WITHOUT EXPRESS WRITTEN PERMISSION BY MANNS WOODWARD STUDIOS.

STUDIOS
ARCHITECTURE + MASTER PLANNING
8098 SANDPIPER CIR, SUITE H
NOTTINGHAM, MD 21236
☎ 410-344-1460
✉ INFO@MWSARCH.COM
WWW.MWSARCH.COM

SEAL:

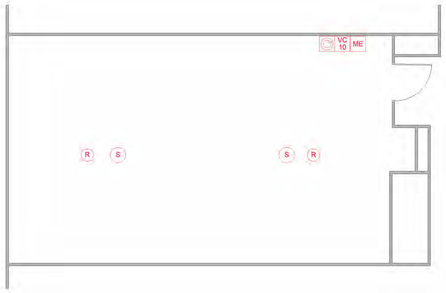

	Device	Mount
	Doorbell	48" AFF
VC 10 | VC 35	Volume Control 10 / 35 Watt	48" AFF
3S	3 Button Alert Selector	48" AFF
2A	2 Button Manual Alert	48" AFF
!	Emergency Alert	48" AFF
	Reset Button	48" AFF
RS	Stove Reset	48" AFF
K	Stove Disconnect	Located at Solenoid
S	8" 70V Speaker, 2.5 Watt	Ceiling
BS	Bathroom Speaker, 1.0 Watt	Ceiling
WS	Wall Speaker, 2.0 Watt	78" AFF
SS	Omnidirectional, 7.5 Watt	192" AFF
ES	External Speaker, 7.5 Watt	Under Soffit
LED	8" LED Ceiling Speaker, 2.5 Watt	Ceiling
R | B	Colored LED Strobe	Ceiling
R	Red LED Cluster Light	Ceiling
A S L	Multi-Color Light	Ceiling Wall
Switch	APS Switch	Rack
	RIB Relay	Above Ceiling
CAD LED AF	CAD 43/55" LED Display	78" AFF* See FHA Notes
FAST	FAST Server	Rack
!	FHA Trouble Strobe	Ceiling
APS	APS Alerting Controller	Rack

Wire Color Legend

16/2 -
16/4 -
18/2 OAS -
18/6 -
Cat6 -
22/6 -

APS Firehouse Alerting
Fire Station Alerting System Solutions
RF and Network Alerting
(410) 239-4644 - FAX (410) 374-8870
115 Airport Drive, Suite 170
Westminster, MD 21157
www.firehousealerting.com

DRAWING TITLE:
GYM/Fitness Room

JOB NAME:
Exeter TSWP FD rev 09292026.

JOB ADDRESS:
x

CITY, STATE:
x

DATE: *9-30-26*
SCALE: *NOT TO SCALE*
DRAWN BY:
APPROVED BY:

SHEET NO.
FSA-13

EXETER TOWNSHIP
EMERGENCY SERVICES FACILITY
70 GIBRALTAR ROAD
READING, PA 19606

PROJECT NUMBER: 25-049

SUBMISSION:
BID SET

ORIGINAL ISSUE DATE:
10/01/2026

SHEET REVISION SCHEDULE:
No. DATE

GYM/FITNESS ROOM

SHEET NUMBER:
FSA-13

10/1/2026 8:51:25 PM

ALL DRAWINGS ARE PROTECTED BY FEDERAL COPYRIGHT BY MANNS WOODWARD STUDIOS, INC. AND CAN NOT BE REPRODUCED OR MODIFIED IN ANY MANNER WITHOUT WRITTEN PERMISSION. DOCUMENTS MAY NOT BE USED IN PART OR WHOLE TO DEVELOP THE DESIGN OF ANOTHER BUILDING WITHOUT EXPRESS WRITTEN PERMISSION BY MANNS WOODWARD STUDIOS.

STUDIOS
ARCHITECTURE + MASTER PLANNING
8098 SANDPIPER CIR, SUITE H
NOTTINGHAM, MD 21236
☎ 410-344-1460
✉ INFO@MWSARCH.COM
WWW.MWSARCH.COM

SEAL:

EXETER TOWNSHIP
EMERGENCY SERVICES FACILITY
70 GIBRALTAR ROAD
READING, PA 19606

PROJECT NUMBER: 25-049

SUBMISSION:
BID SET

ORIGINAL ISSUE DATE:
10/01/2026

SHEET REVISION SCHEDULE:
No. DATE

TRAINING ROOM

SHEET NUMBER:
FSA-14

10/1/2026 8:51:28 PM

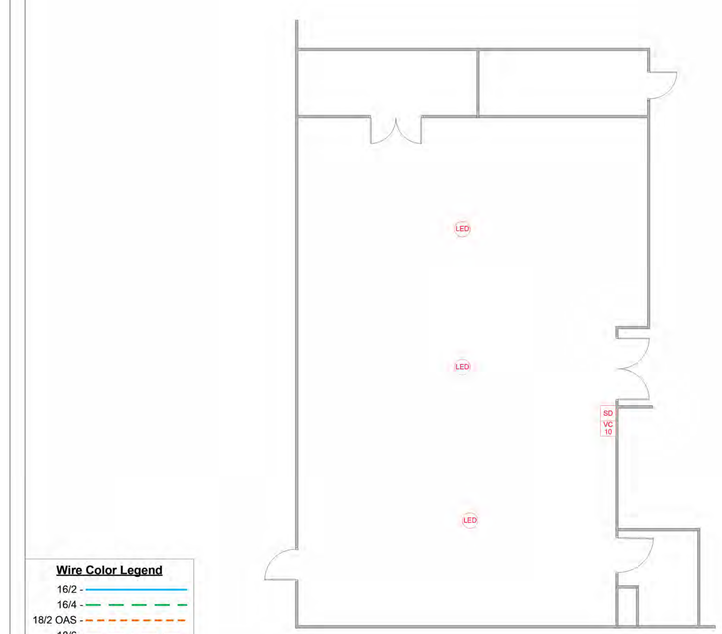

	Device	Mount
	Doorbell	48" AFF
VC 10 / VC 35	Volume Control 10 / 35 Watt	48" AFF
3S	3 Button Alert Selector	48" AFF
2A	2 Button Manual Alert	48" AFF
!	Emergency Alert	48" AFF
	Reset Button	48" AFF
STOVE	Stove Reset	48" AFF
A	Stove Disconnect	Located at Solenoid
S	8" 70V Speaker, 2.5 Watt	Ceiling
BS	Bathroom Speaker, 1.0 Watt	Ceiling
WS	Wall Speaker, 2.0 Watt	78" AFF
3S	Omnidirectional, 7.5 Watt	192" AFF
ES	External Speaker, 7.5 Watt	Under Soffit
LED	8" LED Ceiling Speaker, 2.5 Watt	Ceiling
R / B	Colored LED Strobe	Ceiling
R	Red LED Cluster Light	Ceiling
4 / S / L	Multi-Color Light	Ceiling Wall
Switch	APS Switch	Rack
	RIB Relay	Above Ceiling
CAD LED 43"	CAD 43/55" LED Display	78" AFF* See FHA Notes
FAST	FAST Server	Rack
!	FHA Trouble Strobe	Ceiling
APS	APS Alerting Controller	Rack

Wire Color Legend

16/2 -
16/4 -
18/2 OAS -
18/6 -
Cat6 -
22/6 -

APS Firehouse Alerting
Fire Station Alerting System Solutions
RF and Network Alerting
(410) 239-4644 - FAX (410) 374-8870
115 Airport Drive, Suite 170
Westminster, MD 21157
www.firehousealerting.com

DRAWING TITLE:
Training Room

JOB NAME:
Exeter TSWP FD rev 09292026.

JOB ADDRESS:
x

CITY, STATE:
x

DATE: *9-30-26*
SCALE: *NOT TO SCALE*
DRAWN BY:
APPROVED BY:
SHEET NO.
FSA-14

ALL DRAWINGS ARE PROTECTED BY FEDERAL COPYRIGHT BY MANNS WOODWARD STUDIOS, INC. AND CAN NOT BE REPRODUCED OR MODIFIED IN ANY MANNER WITHOUT WRITTEN PERMISSION. DOCUMENTS MAY NOT BE USED IN PART OR WHOLE TO DEVELOP THE DESIGN OF ANOTHER BUILDING WITHOUT EXPRESS WRITTEN PERMISSION BY MANNS WOODWARD STUDIOS.

STUDIOS
ARCHITECTURE + MASTER PLANNING
8098 SANDPIPER CIR, SUITE H
NOTTINGHAM, MD 21236
☎ 410-344-1460
✉ INFO@MWSARCH.COM
WWW.MWSARCH.COM

SEAL:

EXETER TOWNSHIP
EMERGENCY SERVICES FACILITY
70 GIBRALTAR ROAD
READING, PA 19606

PROJECT NUMBER: 25-049

SUBMISSION:
BID SET

ORIGINAL ISSUE DATE:
10/01/2026

SHEET REVISION SCHEDULE:
No. DATE

ALERTING DISPLAY DETAILS

SHEET NUMBER:
FSA-15

10/1/2026 8:51:27 PM

Typical Apparatus Bay Alerting Display Installation Above Doorways

55-Inch Commercial Display

Alerting Display Locations and Size

Display 001 – FSA-# – (Room) - 43"
Display 002 – FSA-# – (Room) - 55"
Display 003 – FSA-# – (Room) - 55"
Display 004 – FSA-# – (Room) - 43"
Display 005 – FSA-# – (Room) - 43"
Display 006 – FSA-# – (Room) - 43"
Display 007 – FSA-# – (Room) - 43"

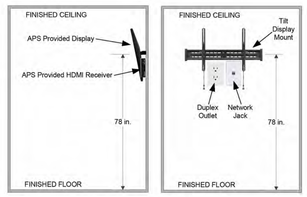

Typical Administrative or Living Area Alerting Display Mounting

Wire Color Legend

16/2 -
16/4 -
18/2 OAS -
18/6 -
Cat6 -
22/6 -

APS Firehouse Alerting
Fire Station Alerting System Solutions
RF and Network Alerting
(410) 239-4644 – FAX (410) 374-8870
115 Airport Drive, Suite 170
Westminster, MD 21157
www.firehousealerting.com

DRAWING TITLE: *Alerting Display Details*	
JOB NAME: *Exeter TSWP FD rev 09292026.*	
JOB ADDRESS: *x*	
CITY, STATE: *x*	
DATE: *9-30-26*	SHEET NO.
SCALE: *NOT TO SCALE*	FSA-15
DRAWN BY:	
APPROVED BY:	

ALL DRAWINGS ARE PROTECTED BY FEDERAL COPYRIGHT BY MANNS WOODWARD STUDIOS, INC. AND CAN NOT BE REPRODUCED OR MODIFIED IN ANY MANNER WITHOUT WRITTEN PERMISSION. DOCUMENTS MAY NOT BE USED IN PART OR WHOLE TO DEVELOP THE DESIGN OF ANOTHER BUILDING WITHOUT EXPRESS WRITTEN PERMISSION BY MANNS WOODWARD STUDIOS.

STUDIOS
ARCHITECTURE + MASTER PLANNING
8098 SANDPIPER CIR, SUITE H
NOTTINGHAM, MD 21236
☎ 410-344-1460
✉ INFO@MWSARCH.COM
WWW.MWSARCH.COM

SEAL:

EXETER TOWNSHIP
EMERGENCY SERVICES FACILITY
70 GIBRALTAR ROAD
READING, PA 19606

PROJECT NUMBER: 25-049

SUBMISSION:
BID SET

ORIGINAL ISSUE DATE:
10/01/2026

SHEET REVISION SCHEDULE:
No. DATE

MISC DETAILS

SHEET NUMBER:
FSA-16

10/1/2026 8:51:28 PM

Fire department provided radio with line-level audio output. Radio to be located in rack in IT room with alerting equipment with customer provided external antenna



Radio shown for visual purposes only. Actual customer radio may vary. Customer to have proper connectors for radio that will provide line-level audio output to amplifier.



Customer provided paging adapter. Picture is for representation purposes only. Paging adapter will provide 12V input to APS Alerting Controller to ramp-up volume when paging over station alerting speakers.



Installer to run CAT6 network cable from customer's VoIP phone system controller to customer-provided paging adapter. Installer to run one 18/2 OAS stranded wire from paging adapter to APS Alerting Controller, and one, 18/2 stranded wire from paging adapter to APS amplifier input.

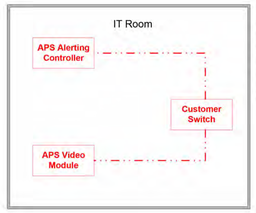

Installer to provide two, CAT6 network cables from customer's network switch. One cable to be connected to APS Alerting Controller. One cable to be connected to APS video module. Customer must provide static IP addresses, and configure ports per APS instructions prior to APS Technician being on-site.

Wire Color Legend

16/2 -
16/4 -
18/2 OAS -
18/6 -
Cat6 -
22/6 -

APS Firehouse Alerting
Fire Station Alerting System Solutions
RF and Network Alerting

(410) 239-4644 - FAX (410) 374-8870
115 Airport Drive, Suite 170
Westminster, MD 21157
www.firehousealerting.com

DRAWING TITLE: *Misc Details*	
JOB NAME: *Exeter TSWP FD rev 09292026.*	
JOB ADDRESS: *x*	
CITY, STATE: *x*	
DATE: *9-30-26*	SHEET NO.
SCALE: *NOT TO SCALE*	FSA-16
DRAWN BY:	
APPROVED BY:	

ALL DRAWINGS ARE PROTECTED BY FEDERAL COPYRIGHT BY MANNS WOODWARD STUDIOS, INC. AND CAN NOT BE REPRODUCED OR MODIFIED IN ANY MANNER WITHOUT WRITTEN PERMISSION. DOCUMENTS MAY NOT BE USED IN PART OR WHOLE TO DEVELOP THE DESIGN OF ANOTHER BUILDING WITHOUT EXPRESS WRITTEN PERMISSION BY MANNS WOODWARD STUDIOS.

STUDIOS
ARCHITECTURE + MASTER PLANNING
8098 SANDPIPER CIR, SUITE H
NOTTINGHAM, MD 21236
☎ 410-344-1460
✉ INFO@MWSARCH.COM
WWW.MWSARCH.COM

SEAL:

EXETER TOWNSHIP
EMERGENCY SERVICES FACILITY
70 GIBRALTAR ROAD
READING, PA 19606

PROJECT NUMBER: 25-049

SUBMISSION:
BID SET

ORIGINAL ISSUE DATE:
10/01/2026

SHEET REVISION SCHEDULE:
No. DATE

ISIMET UTILITY CONTROLLER

SHEET NUMBER:
FSA-17

10/1/2026 8:51:30 PM

FLAv2 Label	Description
120V_Input	*120VAC Line Voltage Input*
Circuit #1 Output	*24VDC Circuit Output for Gas and Electric*
Circuit #2 Output	*24VDC Circuit Output for Outdoor Grill Controller*
Gas Detector, Carbon Monoxide	*Dry-Contact Input with 24VDC Output*
EMS/BMS, ALARM, Emergency Button, OGC	*Dry-Contact (Voltage-Free) Inputs*
Panic Output	*24VDC and Dry-Contact Configurable Output*
Pressure Transmitter Input	*ISIMET approved Gas Pressure Transmitter*

Wire Color Legend

16/2 -
16/4 -
18/2 OAS -
18/6 -
Cat6 -
22/6 -

APS Firehouse Alerting
Fire Station Alerting System Solutions
RF and Network Alerting
(410) 239-4644 - FAX (410) 374-8870
115 Airport Drive, Suite 170
Westminster, MD 21157
www.firehousealerting.com

DRAWING TITLE:
ISIMET Utility Controller

JOB NAME:
Exeter TSWP FD rev 09292026.

JOB ADDRESS:
x

CITY, STATE:
x

DATE: *9-30-26*
SCALE: *NOT TO SCALE*
DRAWN BY:
APPROVED BY:

SHEET NO.
FSA-17

ALL DRAWINGS ARE PROTECTED BY FEDERAL COPYRIGHT BY MANNS WOODWARD STUDIOS, INC. AND CAN NOT BE REPRODUCED OR MODIFIED IN ANY MANNER WITHOUT WRITTEN PERMISSION. DOCUMENTS MAY NOT BE USED IN PART OR WHOLE TO DEVELOP THE DESIGN OF ANOTHER BUILDING WITHOUT EXPRESS WRITTEN PERMISSION BY MANNS WOODWARD STUDIOS.