ONECALL NOTES:

PENNSYLVANIA ACT 287, AS AMENDED BY ACT 121 REQUIRES NOTIFICATION OF EXCAVATORS, DESIGNERS, OR ANY PERSON PREPARING TO DISTURB THE EARTH'S SURFACE ANYWHERE IN THE COMMONWEALTH.

PLAN INDEX:

Sheet No.	Plan Name	Plan No.
C1.0	COVER SHEET	230004-08-CO-01
C2.0	EXISTING CONDITIONS & DEMOLITION PLAN	230004-08-EC-02
C3.0	SITE PLAN	230004-08-SI-03
C4.0	GRADING & UTILITY PLAN	230004-08-GU-04
C5.0	LANDSCAPING PLAN	230004-08-LA-05
C6.0	CONSTRUCTION DETAILS	230004-08-CD-06
C7.0	E&S CONTROL PLAN	230004-08-ES-07
C7.1	E&S CONTROL DETAILS	230004-08-ESD-08
C7.2	E&S CONTROL NOTES	230004-08-ESN-09
C8.0	ALTERNATE BIDS	230004-08-ALT-10

PUBLIC WORKS FACILITY PROJECT

WYOMISSING BOROUGH
22 READING BOULEVARD
WYOMISSING, PA 19610

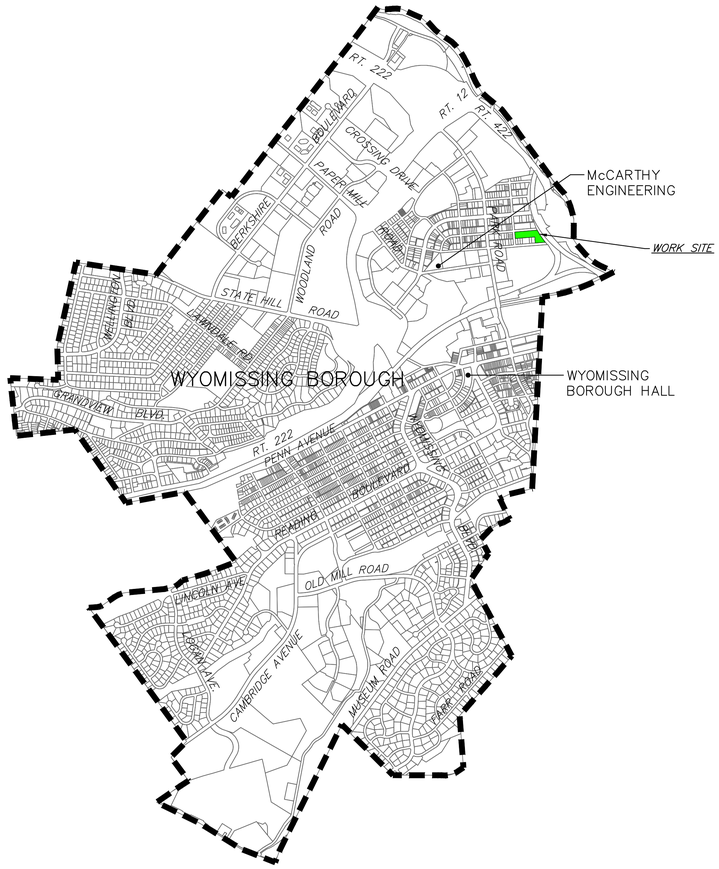

GENERAL NOTES:

1. THE CONTRACTOR SHALL VISIT THE JOB SITE TO BECOME FAMILIAR WITH THE EXISTING CONDITIONS. THE CONTRACTOR SHALL MAKE NECESSARY INVESTIGATIONS AND INQUIRES TO APPROPRIATE PARTIES WITH REGARDS TO THE WORK TO THOROUGHLY UNDERSTAND THE RESPONSIBILITIES PRIOR TO BIDDING.
2. THE CONTRACTOR SHALL VERIFY ALL DIMENSIONS, ELEVATIONS AND DETAILS OF EXISTING CONDITIONS AT THE SITE FOR ASSURANCE OF AN ACCURATE COMPLETION OF THE WORK PRIOR TO ORDERING MATERIALS OR PROCEEDING WITH THE WORK.
3. CONTRACTOR SHALL LOCATE AND VERIFY ALL VERTICAL AND HORIZONTAL LOCATIONS FOR ALL EXISTING ON SITE FEATURES AND AMENITIES WITHIN THIS WORK PRIOR TO THE START OF CONSTRUCTION.
4. EXISTING UTILITY LOCATIONS AND DEPTHS ARE APPROXIMATE AND THE CONTRACTOR SHALL VERIFY EXACT DEPTHS AND LOCATIONS PRIOR TO DIGGING IN THAT LOCATION.
5. THE CONTRACTOR SHALL HAND EXCAVATE WITHIN 18 INCHES OF ALL PROPOSED AND EXISTING UTILITY CROSSINGS.
6. THE CONTRACTOR SHALL PROVIDE PROPER CLEARANCE AND PROTECTION FOR ALL ABOVE GROUND EQUIPMENT AND UTILITIES.
7. THE CONTRACTOR SHALL PROVIDE, INSTALL AND MAINTAIN TEMPORARY PROTECTIVE SYSTEMS FOR ALL ADJACENT STRUCTURE STABILITY, EXCAVATION AND TRENCHING INCLUDING BUT NOT LIMITED TO BRACING, SHORING, SLOPING, BENCHING AND SHIELDING AS PER OSHA STANDARDS AND SPECIFICATIONS, LATEST EDITIONS.
8. ALL THE WORK SHALL CONFORM TO THE REGULATIONS OF OSHA AND ALL LOCAL, COUNTY AND STATE LAWS, LATEST EDITIONS.
9. THE LATEST EDITION OF ALL SPECIFIED REFERENCES SHALL APPLY THROUGHOUT THE PLAN SET.
10. THE CONTRACTOR SHALL SUBMIT SHOP DRAWINGS, PRODUCT SPECIFICATIONS AND VENDOR INFORMATION FOR ALL FABRICATION WORK AND MATERIALS TO THE OWNER FOR WRITTEN APPROVAL PRIOR TO PROCEEDING WITH PURCHASE, INSTALLATION, REMOVAL, MANUFACTURE AND ASSOCIATED WORK.
11. THE CONTRACTOR SHALL PLACE AND STORE ANY EQUIPMENT AND MATERIALS IN A RESPONSIBLE LOCATION, APPROVED BY THE OWNER, AS TO NOT INTERFERE WITH PEDESTRIAN AND MOTOR VEHICLE TRAFFIC BOTH DURING AND AFTER A WORK DAY.
12. THE CONTRACTOR SHALL COORDINATE WITH THE OWNER FOR ALL CONSTRUCTION ACTIVITIES VIA A WRITTEN APPROVED SCHEDULE TO MINIMIZE DISTURBANCE TO ANY ONGOING OWNER OPERATIONS AT THE SITE. DO NOT BLOCK ACCESS TO THE SITE. THE CONTRACTOR SHALL COORDINATE DELIVERIES AND CONSTRUCTION OPERATIONS WITH THE OWNER.
13. THE CONTRACTOR SHALL BE RESPONSIBLE FOR PROVIDING TEMPORARY UTILITIES REQUIRED FOR THE WORK INCLUDING, BUT NOT LIMITED TO, POWER, WATER, SANITARY SEWER AND TELEPHONE.
14. THE CONTRACTOR SHALL DEMOLISH, FURNISH AND INSTALL IN A RESPONSIBLE CONSTRUCTION SEQUENCE TO ACHIEVE A LEVEL OF QUALITY AS DICTATED ON THIS PLAN SET, SPECIFICATIONS AND APPLICABLE CODES.
15. THE CONTRACTOR SHALL RESTORE ANY DISTURBED AREAS TO THE ORIGINAL CONDITIONS AS THEY WERE FOUND PRIOR TO MOBILIZATION AND CONSTRUCTION.
16. THE OWNER MAY REQUIRE A QUALIFIED INDEPENDENT TESTING AGENCY TO TEST THE QUALITY OF WORKMANSHIP AND MATERIALS THAT WILL PROVIDE WRITTEN REPORTS TO THE CONTRACTOR, OWNER AND ENGINEER. THE CONTRACTOR WILL BE NOTIFIED IMMEDIATELY OF THE DEFICIENT WORK AND REMEDIATE THE DEFICIENCY IN A TIMELY MANNER. RETESTING SHALL BE AT THE CONTRACTOR'S EXPENSE.
17. A PRE-CONSTRUCTION MEETING SHALL BE HELD ON SITE WITH OWNER AND/OR ENGINEER PRIOR TO THE START OF ANY WORK.
18. CONTRACTOR SHALL PROVIDE "AS-BUILT" CONSTRUCTION INFORMATION TO THE OWNER AND ENGINEER UPON COMPLETION OF THIS WORK.
19. THE CONTRACTOR SHALL VERIFY WITH OWNER FOR LOCATION AND SHUT OFF PROCEDURE FOR ALL UTILITIES LOCATED WITHIN THE WORK.
20. THE CONTRACTOR SHALL BE RESPONSIBLE FOR ANY DAMAGE TO EXISTING VALVES, CONNECTIONS OR SHUTOFFS ASSOCIATED WITH DEMOLITION ACTIVITIES FOR THIS WORK.
21. THE CONTRACTOR SHALL DEMOLISH, REMOVE AND DISPOSE OF DEMOLITION DEBRIS INCLUDING, BUT NOT LIMITED TO, PIPING, CONCRETE, EARTH AND BITUMINOUS PAVEMENT IN A PROPER MANNER TO AN OFFSITE DISPOSAL FACILITY AND PROVIDE DISPOSAL INFORMATION AS REQUESTED BY THE OWNER.
22. THE CONTRACTOR SHALL APPLY PROPER ENVIRONMENTAL DUE DILIGENCE WHEN DISPOSING OF DEMOLITION DEBRIS AND EXCESS MATERIALS.
23. THE CONTRACTOR SHALL USE SUPPORTS AND SHORING TECHNIQUES TO PROPERLY SUPPORT EXISTING UTILITY CROSSINGS AND TRENCH WALLS ASSOCIATED WITH DEMOLITION ACTIVITIES AS PER OSHA REGULATIONS.
24. THE CONTRACTOR SHALL SAWCUT EXISTING PAVEMENT AND CONCRETE AS SHOWN ON THE PLAN PRIOR TO THE REMOVAL OF ANY BITUMINOUS PAVEMENT OR DEMOLITION ACTIVITIES ASSOCIATED WITH THIS WORK.
25. THE BOUNDARY AND TOPOGRAPHIC INFORMATION SHOWN HEREON IS BASED ON A FIELD SURVEY PERFORMED AND PREPARED BY McCARTHY ENGINEERING ASSOCIATES, INC. IN OCTOBER 2022.
26. UNDERGROUND FACILITIES HAVE BEEN PLOTTED FROM AVAILABLE SURVEYS AND PLANS OF OTHERS AND THEREFORE THEIR ELEVATION AND LOCATION MUST BE CONSIDERED AS APPROXIMATE ONLY. THE VERIFICATION OF EACH FACILITY SHOWN OR NOT SHOWN, SHALL BE THE RESPONSIBILITY OF THE CONTRACTOR.
27. IT SHALL BE THE RESPONSIBILITY OF THE CONTRACTOR TO SEE THAT NO WORK IS DONE WITHOUT THE PROPER INSPECTIONS BY LOCAL AUTHORITY OR GOVERNING AGENCY.
28. THE CONTRACTOR SHALL NOTIFY THE OWNER AND/OR ENGINEER AS SOON AS POSSIBLE IF CONDITIONS DIFFER FROM THOSE SHOWN ON THE PLANS OR SPECIFICATIONS.
29. THE CONTRACTOR SHALL BE RESPONSIBLE FOR LOCATING THE LIMITS OF THE UNDERGROUND FUEL TANKS PRIOR TO ANY DISTURBANCE OF THE AREA.

ISSUED FOR BID JULY 19, 2023
NOT FOR CONSTRUCTION

Revision	Date	Description	Rev.By
1	8/9/23	Addendum 1	AMK

This document, and all intellectual work, products, represented by and contained herein, is the sole and exclusive property of McCarthy Engineering Associates, Inc. and shall not be reproduced, published or altered in any way by any party, other than the intended recipient, and no licenses, permission or authority is extended, directly or implied, to any party without the written permission of McCarthy Engineering Associates, Inc. Any unauthorized use, reproduction or alteration of this document will be prosecuted to the full extent of the law. Copyright © 2023 McCarthy Engineering Associates, Inc. All rights reserved.

McCARTHY ENGINEERING ASSOCIATES, INC.
2500 East High Street
Suite 630
Pottstown, PA 19464
www.McCarthy-Engineering.com
Phone: 610.374.8001
555 Von Reed Road
Suite 2
Wyomissing, PA 19610

SEAL:

COMMONWEALTH OF PENNSYLVANIA
REGISTERED
PROFESSIONAL
JAMES C. McCARTHY
ENGINEER
PE-051494E

ISSUED FOR BID
COVER SHEET
" PUBLIC WORKS FACILITY "

Client: WYOMISSING BOROUGH
Location: WYOMISSING BOROUGH, BERKS COUNTY, PENNSYLVANIA
Date: JULY 19, 2023

DRAWN BY:	PROJ. MANAGER:
AMK	JCM
PRINCIPAL:	SCALE:
JCM	NOT TO SCALE

SHEET NO.
C1.0

PLAN NO.
230004-08- CO-01

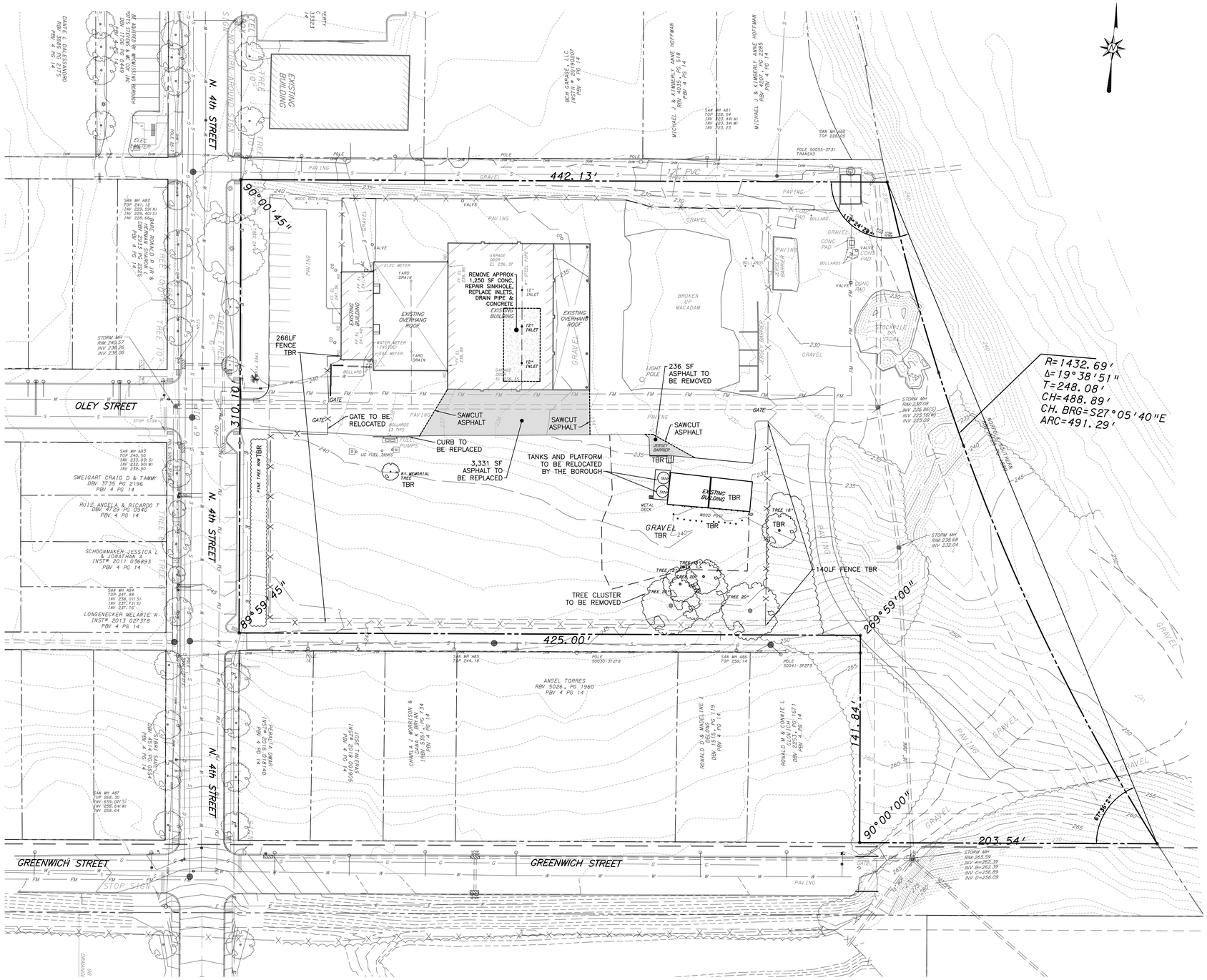

LOCATION MAP
SCALE IN FEET
500 0 500 1000

DEMOLITION NOTES:

1. CONTRACTOR TO DEMOLISH ALL ITEMS NECESSARY TO CONSTRUCT PROPOSED BUILDING AND SITE FEATURES WHETHER OR NOT INDICATED IN THE CONSTRUCTION DOCUMENTS. ADEQUATE AND PROPER PROTECTION SHALL BE PROVIDED TO EXISTING FEATURES NOT BEING REMOVED.
2. EXCAVATIONS THAT ARE LEFT OPEN DURING THE DEMOLITION PROCESS SHALL BE COVERED OR FENCED OFF. THE AREA SHALL BE ADEQUATELY MARKED TO ENSURE WORKER AND PUBLIC SAFETY.
3. THE CONTRACTOR IS RESPONSIBLE FOR TERMINATING ALL APPLICABLE UTILITIES WHERE ITEMS ARE BEING REMOVED IN A SAFE AND CODE CONFORMING MANNER.
4. UNUSABLE MATERIALS AND RUBBISH SHALL BE IMMEDIATELY REMOVED FROM THE SITE. MATERIALS TO BE REUSED WILL BE STOCKPILED IN A SAFE AND SECURE LOCATION. MATERIAL THAT REQUIRES PROTECTION FROM THE WEATHER SHALL BE STORED IN A SECURE DRY LOCATION.
5. DAMAGE CAUSED TO EXISTING FEATURES DURING THE DEMOLITION PROCESS SHALL BE REPAIRED AND RESTORED TO PRE-DEMOLITION CONDITIONS. IF DAMAGE CANNOT BE REPAIRED ADEQUATELY THAN THE DAMAGED ITEM SHALL BE REPLACED AT THE CONTRACTOR'S EXPENSE.
6. COORDINATE ALL DEMOLITION WITH ARCHITECTURAL DRAWINGS.
7. FEATURES SHOWN IN **BOLD** INDICATE ITEMS THAT MUST BE REMOVED, ALSO SEE NOTE 1.

LEGEND:

- EXISTING SANITARY SEWER & MANHOLE
- EXISTING STORM SEWER & CATCH BASIN
- EXISTING WATER LINE & VALVE
- EXISTING FIRE HYDRANT
- EXISTING GAS LINE & VALVE
- EXISTING TELEPHONE
- EXISTING ELECTRIC
- EXISTING OVERHEAD WIRE
- EXISTING SPOT ELEVATION
- EXISTING CONTOURS
- EXISTING LIGHTING FEATURES
- EXISTING UTILITY POLE
- EXISTING CURB AND DEPRESSED CURB
- EXISTING SIGNS
- EXISTING FENCE
- EXISTING TREE LINE
- EXISTING RIP RAP
- (TBR) FEATURE TO BE REMOVED
- PROPOSED SAWCUT LINE

GRAPHIC SCALE
1" = 30'
0 30 60 90

ISSUED FOR BID JULY 19, 2023
NOT FOR CONSTRUCTION

Revision	Date	Description	Rev.By
1	8/9/23	Addendum 1	AMK

This document, and all intellectual and work products represented by and contained herein, is the sole and exclusive property of McCarthy Engineering Associates, Inc. and is not to be used in any way, in whole or in part, by any person or entity for any purpose not specifically intended and stated in writing by McCarthy Engineering Associates, Inc. Any unauthorized use, modification, or duplication of this document, or any of the data or information contained herein, for any purpose whatsoever, without the express written consent of McCarthy Engineering Associates, Inc. is strictly prohibited. Any such unauthorized use shall be at the user's sole risk and without liability to McCarthy Engineering Associates, Inc. and the user shall indemnify and hold harmless McCarthy Engineering Associates, Inc. for all damages resulting therefrom.

McCARTHY ENGINEERING ASSOCIATES, INC.
555 Von Reed Road
Suite 2
Wyomissing, PA 19610
2500 East High Street
Suite 630
Pottstown, PA 19464
www.McCarthy-Engineering.com
Phone: 610.373.8001

SEAL:
COMMONWEALTH OF PENNSYLVANIA
REGISTERED
PROFESSIONAL
JAMES C. McCARTHY
ENGINEER
PE-051454E

ISSUED FOR BID
EXISTING CONDITIONS & DEMOLITION PLAN
" PUBLIC WORKS FACILITY "

Client: WYOMISSING BOROUGH
Location: WYOMISSING BOROUGH, BERKS COUNTY, PENNSYLVANIA
Date: JULY 19, 2023

DRAWN BY:	PROJ. MANAGER:
AMK	JCM
PRINCIPAL:	SCALE:
JCM	1"=30'

SHEET NO.
C2.0

PLAN NO.
230004-08- EC-02

Plot Date: 8/9/2023 11:46 AM P:\04_Wyomissing\2023\08-Public Works Descose\Design\CADD Files\P-Exist-Demo.dwg

ONECALL NOTES:

PENNSYLVANIA ACT 287, AS AMENDED BY ACT 121 REQUIRES NOTIFICATION OF EXCAVATORS, DESIGNERS, OR ANY PERSON PREPARING TO DISTURB THE EARTH'S SURFACE ANYWHERE IN THE COMMONWEALTH.

ACT 287 UNDERGROUND UTILITY PROTECTION ACT, AS AMENDED BY ACT 121

McCARTHY ENGINEERING ASSOCIATES, INC. HEREBY STATES THAT, PURSUANT TO THE PROVISIONS OF ACT NO. 121 OF OCTOBER 2008, OF THE PENNSYLVANIA LEGISLATURE, IT HAS PERFORMED THE FOLLOWING IN PREPARING THESE DRAWINGS REQUIRING EXCAVATION OR DEMOLITION WORK AT SITES WITHIN THE POLITICAL SUBDIVISION(S) SHOWN ON THE DRAWINGS:

1. PURSUANT TO SECTION 4, CLAUSE (2) OF SAID ACT, McCARTHY ENGINEERING ASSOCIATES, INC. REQUESTED FROM EACH USER'S OFFICE DESIGNATED ON SUCH LIST PROVIDED BY THE ONE CALL SYSTEM NOTIFICATION, THE INFORMATION PRESCRIBED BY SECTION 4, CLAUSE (2) OF SAID ACT, NOT LESS THAN (10) NOR MORE THAN (90) WORKING DAYS BEFORE FINAL DESIGN TO BE COMPLETED.
2. PURSUANT TO SECTION 4, CLAUSE (5) OF SAID ACT, McCARTHY ENGINEERING ASSOCIATES, INC. HAS MET THEIR OBLIGATIONS OF CLAUSE (2) BY CALLING THE ONE CALL SYSTEM SERVING THE LOCATION WHERE EXCAVATION IS TO BE PERFORMED.
3. PURSUANT TO SECTION 4, CLAUSE (3) OF SAID ACT, McCARTHY ENGINEERING ASSOCIATES, INC. HAS SHOWN UPON THESE DRAWINGS THE POSITION AND TYPE OF EACH LINE, AS DERIVED PURSUANT TO THE REQUEST MADE AS REQUIRED BY CLAUSE (2). THE SERIAL NUMBER PROVIDED BY THE ONE CALL SYSTEM, THE TOLL-FREE ONE CALL SYSTEM PHONE NUMBER, AND THE NAME OF THE USER, THE USER'S DESIGNATED OFFICE ADDRESS AND PHONE NUMBER AS SHOWN ON THE LIST REFERRED TO IN SECTION 4, CLAUSE (5) OF SAID ACT.

AND McCARTHY ENGINEERING ASSOCIATES, INC. DOES NOT MAKE ANY REPRESENTATION, WARRANTY, ASSURANCE OR GUARANTEE THAT THE INFORMATION RECEIVED PURSUANT TO SAID REQUEST AND AS REFLECTED ON THESE DRAWINGS IS CORRECT OR ACCURATE, BUT McCARTHY ENGINEERING ASSOCIATES, INC., IS REFLECTING SAID INFORMATION ON THESE DRAWINGS ONLY DUE TO THE REQUIREMENTS OF THE SAID ACT NO. 121 OF OCTOBER 2008.

ONE CALL SYSTEM SERIAL NO. NOTIFICATION BY McCARTHY ENGINEERING ASSOCIATES, INC..

DATE: JUNE 23, 2021

ONE CALL SYSTEM SERIAL NUMBER: 20211730550

UNDERGROUND UTILITY USERS:

UNDERGROUND UTILITY LOCATIONS ARE APPROXIMATE AND WERE DETERMINED FROM VISIBLE LOCATION, ACT 287, AS AMENDED BY ACT 121, UTILITY RESPONSES AND/OR BEST AVAILABLE PLAN INFORMATION.

McCARTHY ENGINEERING ASSOCIATES, INC. CANNOT GUARANTEE THE EXACT LOCATION OF ANY UNDERGROUND UTILITIES OR STRUCTURES. AN EXACT LOCATION CAN ONLY BE OBTAINED BY SUBSURFACE EXPLORATION, WHICH IS NOT A PART OF THIS CONTRACT PERFORMANCE.

PA ONE CALL SYSTEM INFORMATION:

PENNSYLVANIA ACT 287, AS AMENDED BY ACT 121, REQUIRES THREE (3) WORKING DAYS NOTICE FOR CONSTRUCTION PHASE AND FIVE (5) WORKING DAYS NOTICE IN DESIGN STAGE.

PA ONE CALL PHONE NUMBER: 1-800-242-1776

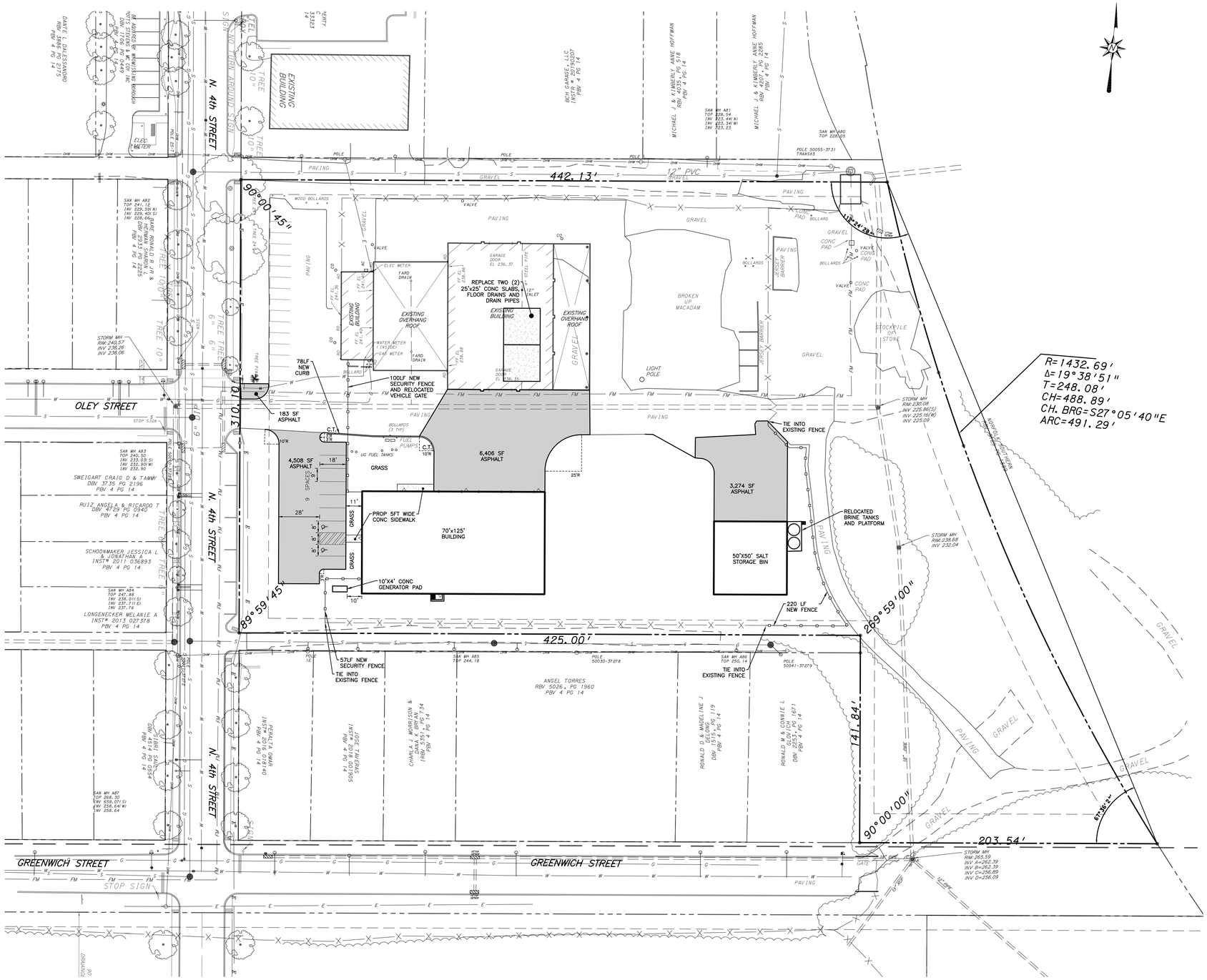

LEGEND:

- EXISTING SANITARY SEWER & MANHOLE
- EXISTING STORM SEWER & CATCH BASIN
- EXISTING WATER LINE & VALVE
- EXISTING FIRE HYDRANT
- EXISTING GAS LINE & VALVE
- EXISTING TELEPHONE
- EXISTING ELECTRIC
- EXISTING OVERHEAD WIRE
- EXISTING LIGHTING FEATURES
- EXISTING UTILITY POLE
- EXISTING CURB AND DEPRESSED CURB
- EXISTING SIGNS
- EXISTING FENCE
- EXISTING TREE LINE
- PROPOSED FENCE
- PROPOSED PAVED AREA
- PROPOSED CONCRETE AREA

GRAPHIC SCALE
1" = 30'
0 30' 60' 90'

ISSUED FOR BID JULY 19, 2023
NOT FOR CONSTRUCTION

Revision	Date	Description	Rev.By
1	8/9/23	Addendum 1	AMK

This document, and all information and work products represented by and contained therein, is the sole and exclusive property of McCarthy Engineering Associates, Inc. and is not to be used for any purpose other than that for which it was intended and prepared, and not loaned, transmitted or otherwise disclosed, directly or indirectly, to any party without the prior written consent of McCarthy Engineering Associates, Inc. Any unauthorized use, disclosure or modification of this document, or any portion thereof, may violate applicable laws, including copyright laws, and may subject the user to liability. McCarthy Engineering Associates, Inc. is not liable for any such unauthorized use. All rights reserved.

McCARTHY ENGINEERING ASSOCIATES, INC.
2500 East High Street
Suite 630
Pottstown, PA 19464
www.McCarthy-Engineering.com
Phone: 610.323.8500
555 Van Reed Road
Suite 2
Wyomissing, PA 19610

SEAL: REGISTERED PROFESSIONAL JAMES C. McCARTHY ENGINEER PE-051404E

ISSUED FOR BID
SITE PLAN
" PUBLIC WORKS FACILITY "

Client: WYOMISSING BOROUGH
Location: WYOMISSING BOROUGH, BERKS COUNTY, PENNSYLVANIA
Date: JULY 19, 2023

DRAWN BY:	PROJ. MANAGER:
AMK	JCM
PRINCIPAL:	SCALE:
JCM	1"=30'

SHEET NO.
C3.0

PLAN NO.
230004-08- SI-03

Plot Date: 8/9/2023 11:46 AM P:\04_Wyomissing\2023\08-Public Works Descope\Design\CADD Files\P-Site.dwg

GENERAL CONSTRUCTION NOTES

1. AREAS WHICH ARE TO BE FILLED SHALL BE COMPACTED TO A MINIMUM DENSITY OF 98% MAXIMUM DENSITY AS DETERMINED BY THE MODIFIED PROCTOR TEST (ASTM D-698) IN THE BUILDING, PAVED AND SIDEWALK AREAS, AND 92% IN OTHER AREAS.
2. DURING EXCAVATION FOR FOOTINGS, IF ANY UNSUITABLE SOIL IS UNCOVERED, THE CONTRACTOR SHALL REMOVE IT AND DEEPEN FOOTINGS AS NECESSARY TO BUILD ON CLEAN VIRGIN SOIL.
3. UNDERGROUND FACILITIES HAVE BEEN PLOTTED FROM AVAILABLE SURVEYS AND PLANS OF OTHERS AND THEREFORE THEIR ELEVATION AND LOCATION MUST BE CONSIDERED AS APPROXIMATE ONLY. THE VERIFICATION OF EACH FACILITY SHOWN OR NOT SHOWN, SHALL BE THE RESPONSIBILITY OF THE CONTRACTOR.
4. ALL MATERIALS AND METHODS OF CONSTRUCTION FOR STORM, WATER SERVICE AND SANITARY SEWERS TO MEET THE LATEST STANDARDS AND SPECIFICATIONS OF THE LOCAL AUTHORITY OR GOVERNING AGENCY.
5. CONTRACTOR TO VERIFY LOCATION AND FLOW OF EXISTING UTILITIES PRIOR TO INSTALLATION OF PLUMBING. ALL SERVICES TO BE CONNECTED IN ACCORDANCE WITH LOCAL CODES AND/OR UTILITY COMPANIES REQUIREMENT.
6. PAVEMENT SHALL BE CONSTRUCTED IN ACCORDANCE WITH PENNDOT SPECIFICATIONS PUBLICATION 408, LATEST EDITION.
7. IT SHALL BE THE RESPONSIBILITY OF THE CONTRACTOR TO NOTIFY THE LOCAL AUTHORITY OR GOVERNING AGENCY OF THE BEGINNING DATE OF CONSTRUCTION AND IT SHALL BE THE RESPONSIBILITY OF THE CONTRACTOR TO SEE THAT NO WORK IS DONE WITHOUT THE PROPER INSPECTIONS BY LOCAL AUTHORITY OR GOVERNING AGENCY.
8. CONTRACTOR TO NOTIFY ENGINEER AS SOON AS POSSIBLE IF CONDITIONS ON GROUND DIFFER FROM THOSE SHOWN ON THE PLAN.
9. SEE ARCHITECTURAL PLANS FOR EXACT BUILDING MEASUREMENTS AND DETAILS
10. ALL AREAS OTHER THAN PAVED AREAS SHALL HAVE A MINIMUM DEPTH OF SIX INCHES (6") OF TOPSOIL. PRIOR TO SEEDING, THE SURFACE SHALL BE SCARIFIED AND CLEARED OF ALL TRASH, DEBRIS, ROOTS AND OTHER OBJECTS THAT WOULD INTERFERE WITH PLANTING, FERTILIZING OR MAINTENANCE OPERATIONS.
11. SEEDING AND MULCHING SHALL BE IN ACCORDANCE WITH PENNDOT PUBLICATION 408.

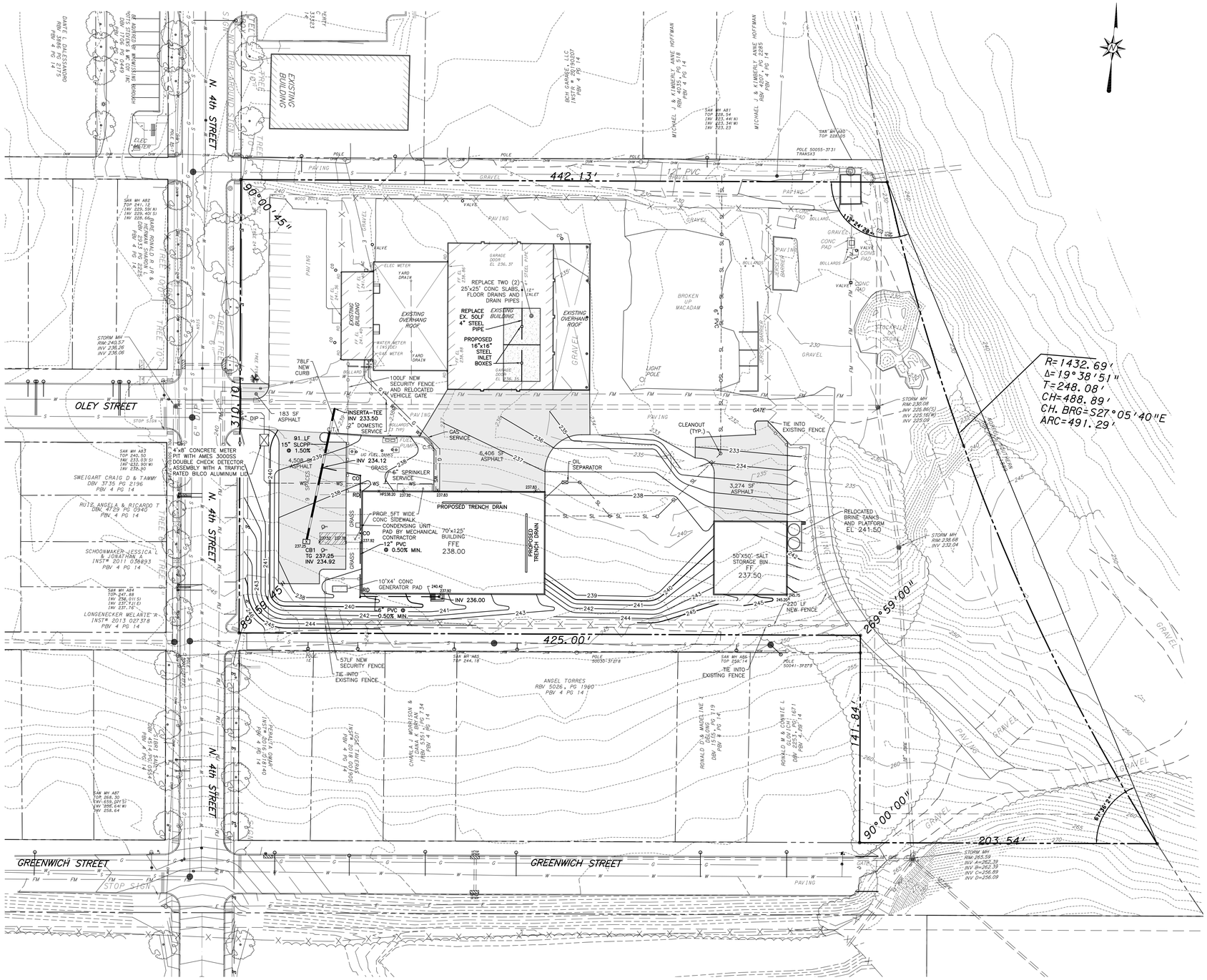

LEGEND:

- S — EXISTING SANITARY SEWER & MANHOLE
- FM — EXISTING SANITARY FORCEMAIN
- SL — SL — EXISTING SANITARY LATERAL
- EXISTING STORM SEWER & CATCH BASIN
- PROPOSED STORM SEWER & CATCH BASIN
- PROPOSED JUNCTION BOX
- PROPOSED END WALL
- W — EXISTING WATER LINE & VALVE
- WS — EXISTING WATER SERVICE
- W WELL — EXISTING WELL
- EXISTING FIRE HYDRANT
- G — EXISTING GAS LINE & VALVE
- T — EXISTING TELEPHONE
- E — EXISTING ELECTRIC
- OHW — EXISTING OVERHEAD WIRE
- x 451.25 — EXISTING SPOT ELEVATION
- x 451.25 — PROPOSED SPOT ELEVATION
- 450 — EXISTING CONTOURS
- 450 / 448 — PROPOSED CONTOURS
- EXISTING LIGHTING FEATURES
- EXISTING UTILITY POLE
- DC — EXISTING CURB AND DEPRESSED CURB

GRAPHIC SCALE
1" = 30'
0 30' 60' 90'

ISSUED FOR BID JULY 19, 2023
NOT FOR CONSTRUCTION

			AMK
1	8/9/23	Addendum 1	Rev.By
Revision	Date	Description	

This document, and all information and work products represented by and contained therein, is the sole and exclusive property of McCarthy Engineering Associates, Inc. and may not be used, published, or disclosed to any party without the express written consent of McCarthy Engineering Associates, Inc. Any unauthorized use, publication, or disclosure by any party other than the intended recipient, and not limited to, any reproduction, adaptation, or distribution, or any derivative works thereof, without the express written consent of McCarthy Engineering Associates, Inc. is strictly prohibited. © McCarthy Engineering Associates, Inc. All rights reserved.

McCARTHY ENGINEERING ASSOCIATES, INC.
2500 East High Street
Suite 630
Pottstown, PA 19464
www.McCarthy-Engineering.com
Phone: 610.374.8001
555 Von Reed Road
Suite 2
Wyomissing, PA 19610

SEAL:
COMMONWEALTH OF PENNSYLVANIA REGISTERED PROFESSIONAL JAMES C. McCARTHY ENGINEER PE-051494E

ISSUED FOR BID
GRADING & UTILITY PLAN
" PUBLIC WORKS FACILITY "

Client: WYOMISSING BOROUGH
Location: WYOMISSING BOROUGH, BERKS COUNTY, PENNSYLVANIA
Date: JULY 19, 2023

DRAWN BY:	PROJ. MANAGER:
AMK	JCM
PRINCIPAL:	SCALE:
JCM	1"=30'

SHEET NO.
C4.0

PLAN NO.
230004-08- GU-04

Plot Date: 8/9/2023 11:47 AM P:\04_Wyomissing\2023\08-Public Works Design\CADD Files\P-Grade.dwg

ONECALL NOTES:

Pennsylvania811

PENNSYLVANIA ACT 287, AS AMENDED BY ACT 121 REQUIRES NOTIFICATION OF EXCAVATORS, DESIGNERS, OR ANY PERSON PREPARING TO DISTURB THE EARTH'S SURFACE ANYWHERE IN THE COMMONWEALTH.

ACT 287 UNDERGROUND UTILITY PROTECTION ACT, AS AMENDED BY ACT 121

McCARTHY ENGINEERING ASSOCIATES, INC. HEREBY STATES THAT, PURSUANT TO THE PROVISIONS OF ACT NO. 121 OF OCTOBER 2008, OF THE PENNSYLVANIA LEGISLATURE, IT HAS PERFORMED THE FOLLOWING IN PREPARING THESE DRAWINGS REQUIRING EXCAVATION OR DEMOLITION WORK AT SITES WITHIN THE POLITICAL SUBDIVISION(S) SHOWN ON THE DRAWINGS:

1. PURSUANT TO SECTION 4, CLAUSE (2) OF SAID ACT, McCARTHY ENGINEERING ASSOCIATES, INC. REQUESTED FROM EACH USER'S OFFICE DESIGNATED ON SUCH LIST PROVIDED BY THE ONE CALL SYSTEM NOTIFICATION, THE INFORMATION PRESCRIBED BY SECTION 4, CLAUSE (2) OF SAID ACT, NOT LESS THAN (10) NOR MORE THAN (90) WORKING DAYS BEFORE FINAL DESIGN TO BE COMPLETED.
2. PURSUANT TO SECTION 4, CLAUSE (5) OF SAID ACT, McCARTHY ENGINEERING ASSOCIATES, INC. HAS MET THEIR OBLIGATIONS OF CLAUSE (2) BY CALLING THE ONE CALL SYSTEM SERVING THE LOCATION WHERE EXCAVATION IS TO BE PERFORMED.
3. PURSUANT TO SECTION 4, CLAUSE (3) OF SAID ACT, McCARTHY ENGINEERING ASSOCIATES, INC. HAS SHOWN UPON THESE DRAWINGS "THE POSITION AND TYPE OF EACH LINE, AS DERIVED PURSUANT TO THE REQUEST MADE AS REQUIRED BY CLAUSE (2), THE SERIAL NUMBER PROVIDED BY THE ONE CALL SYSTEM, THE TOLL-FREE ONE CALL SYSTEM PHONE NUMBER, AND THE NAME OF THE USER, THE USER'S DESIGNATED OFFICE ADDRESS AND PHONE NUMBER AS SHOWN ON THE LIST REFERRED TO IN SECTION 4, CLAUSE (5) OF SAID ACT."

AND McCARTHY ENGINEERING ASSOCIATES, INC. DOES NOT MAKE ANY REPRESENTATION, WARRANTY, ASSURANCE OR GUARANTEE THAT THE INFORMATION RECEIVED PURSUANT TO SAID REQUEST AND AS REFLECTED ON THESE DRAWINGS IS CORRECT OR ACCURATE, BUT McCARTHY ENGINEERING ASSOCIATES, INC.. IS REFLECTING SAID INFORMATION ON THESE DRAWINGS ONLY DUE TO THE REQUIREMENTS OF THE SAID ACT NO. 121 OF OCTOBER 2008.

ONE CALL SYSTEM SERIAL NO. NOTIFICATION BY McCARTHY ENGINEERING ASSOCIATES, INC..

DATE: JUNE 23, 2021

ONE CALL SYSTEM SERIAL NUMBER: 20211730550

UNDERGROUND UTILITY USERS:

UNDERGROUND UTILITY LOCATIONS ARE APPROXIMATE AND WERE DETERMINED FROM VISIBLE LOCATION, ACT 287, AS AMENDED BY ACT 121, UTILITY RESPONSES AND/OR BEST AVAILABLE PLAN INFORMATION.

McCARTHY ENGINEERING ASSOCIATES, INC. CANNOT GUARANTEE THE EXACT LOCATION OF ANY UNDERGROUND UTILITIES OR STRUCTURES. AN EXACT LOCATION CAN ONLY BE OBTAINED BY SUBSURFACE EXPLORATION, WHICH IS NOT A PART OF THIS CONTRACT PERFORMANCE.

PA ONE CALL SYSTEM INFORMATION:

PENNSYLVANIA ACT 287, AS AMENDED BY ACT 121, REQUIRES THREE (3) WORKING DAYS NOTICE FOR CONSTRUCTION PHASE AND FIVE (5) WORKING DAYS NOTICE IN DESIGN STAGE.

PA ONE CALL PHONE NUMBER: 1-800-242-1776

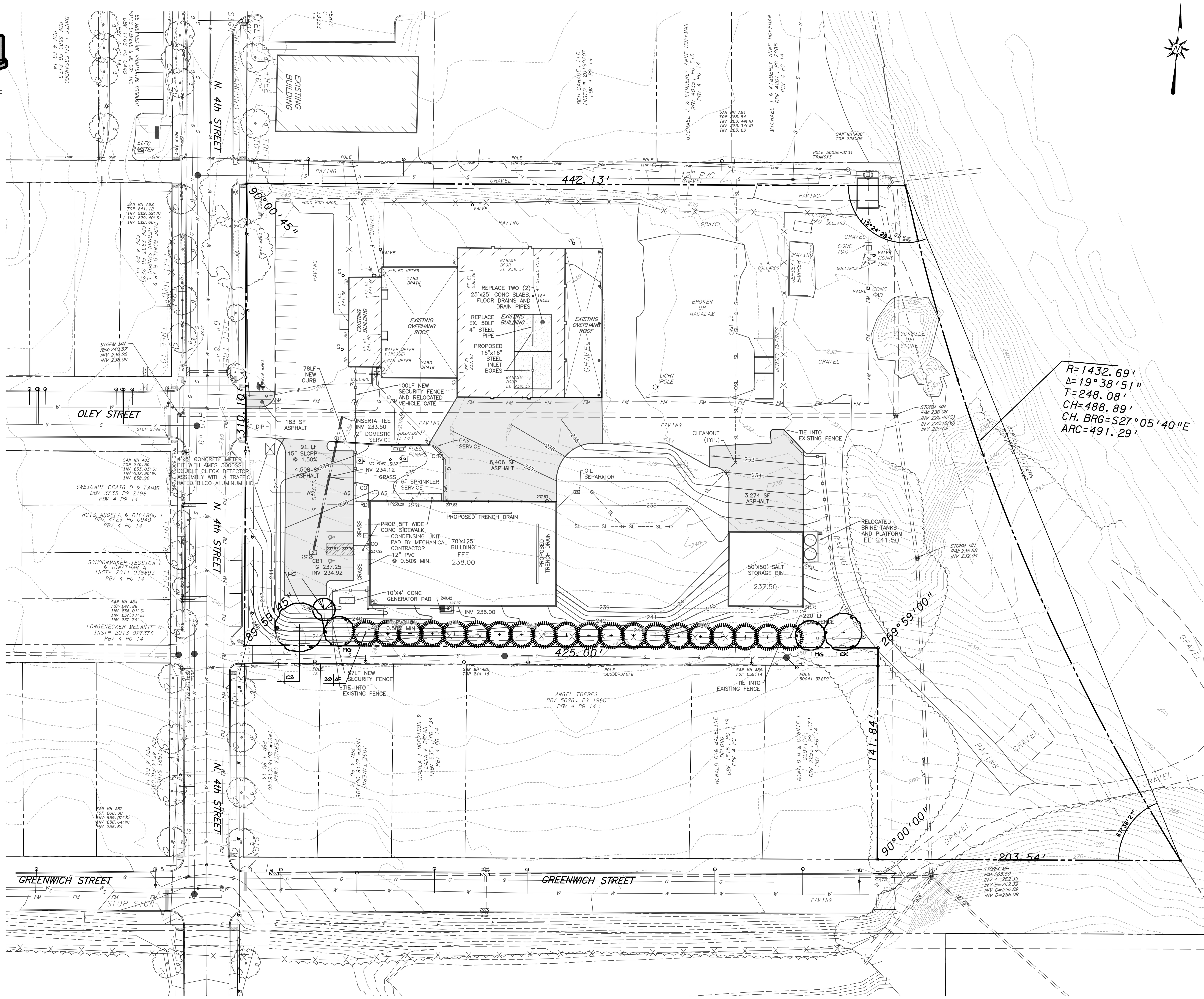

LANDSCAPE NOTES:

1. ALL VARIETIES ARE TO BE USED AS SPECIFIED, OR AN APPROVED EQUAL.
2. ALL PLANTING MATERIALS MUST BE TO REGIONAL AND NATIONAL NURSERY STANDARDS AND BE APPROVED STOCK FREE OF PESTS.
3. ALL SIZES AND GRADING STANDARDS FOR PLANT MATERIALS SHALL CONFORM WITH THE LATEST EDITION OF AMERICAN STANDARD OF NURSERY STOCK AS SPONSORED BY THE AMERICAN ASSOCIATION OF NURSERYMEN, INC., AND APPROVED MAY 2, 1986, BY THE AMERICAN NATIONAL STANDARDS INSTITUTE, INC., OR THE LATEST REVISED EDITION OF THIS STANDARD.
4. ALL PLANTING AND RELATED WORK SHALL BE GUARANTEED FOR A PERIOD OF ONE YEAR FROM THE DATE OF ACCEPTANCE BY THE TOWNSHIP. DEAD PLANTS SHALL BE REMOVED IMMEDIATELY AND REPLACEMENTS MADE NOT LATER THAN DURING THE NEXT PLANTING SEASON.
5. STAKE AND GUY TREES ONLY AS NOTED IN DETAIL.
6. ALL PLANTING MOUNDS AND BEDS SHALL BE MULCHED TO A DEPTH OF 3", UNLESS OTHERWISE SPECIFIED.
7. ON MULTIPLE STEM TREES – TOTAL CALIPER OF ALL STEMS (MIN. 3) IS TO BE EQUAL TO 2.5 INCHES.
8. WHEN PLANTED, ALL TREES MUST BE AT LEAST 6 FEET HIGH, WITH A MINIMUM CALIPER OF 2.5 INCHES MEASURED 6 INCHES ABOVE GROUND, OR IF GREATER THAN 4.5", AT 12" ABOVE GROUND.
9. STREET TREES SHALL HAVE A TRUNK THAT IS CLEAN AND STRAIGHT WITHOUT BRANCHES FOR 7 FEET ABOVE THE GROUND.
10. ALL SHADE TREES TO BE AT LEAST 3" CALIPER TO COMPENSATE FOR LARGE TREES REMOVED.

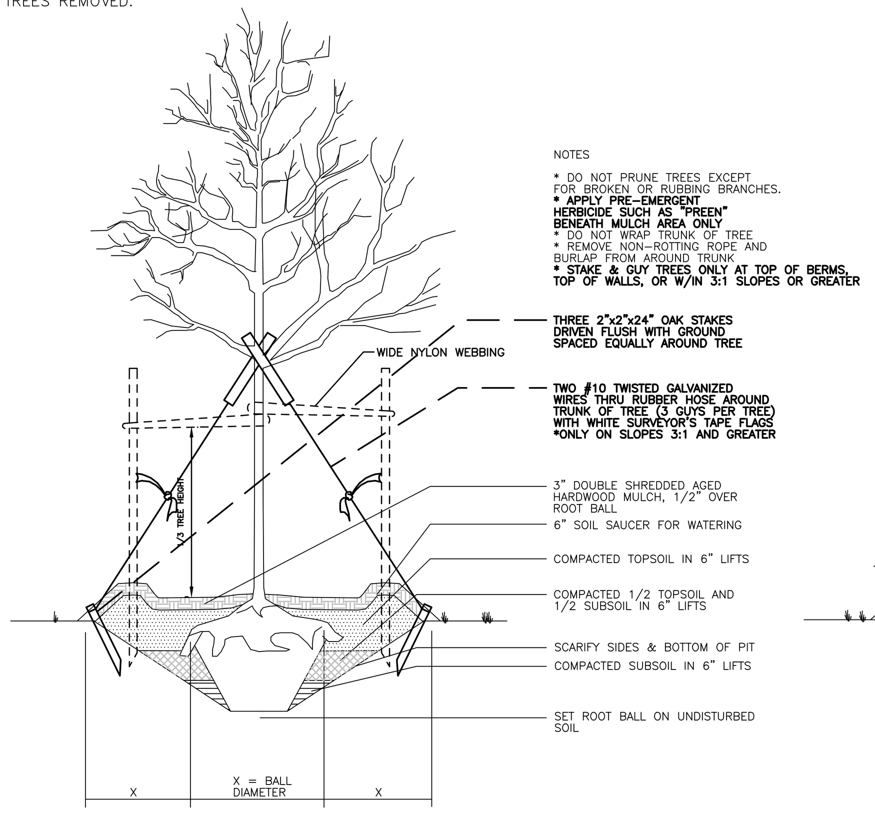

DECIDUOUS TREE PLANTING DETAIL

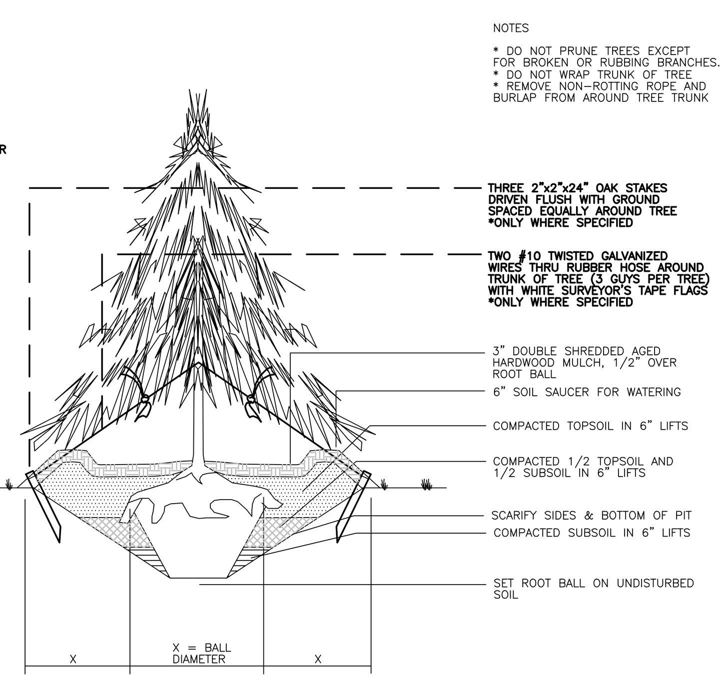

EVERGREEN TREE PLANTING DETAIL

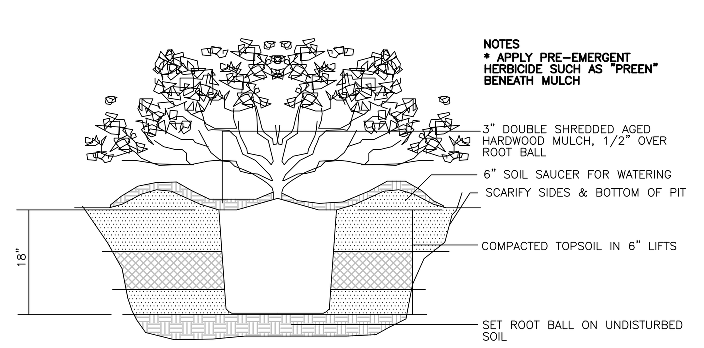

SHRUB PLANTING DETAIL

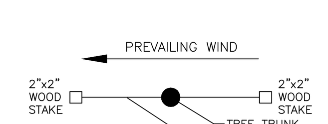

PLAN VIEW

PLANT LIST

KEY	AMT	BOTANICAL	COMMON NAME	PLANTING SIZE	NOTES
DECIDUOUS SHADE TREES					
CK	1	CLADRASTIS KENTUKEA	YELLOWWOOD	2 – 2 1/2" CALIPER	BB
CS	1	CATALPA SPECIOSA	NORTHERN CATALPA	2 – 2 1/2" CALIPER	BB
EVERGREEN TREES					
AF	20	ABIES FRASERI	FRASER FIR	8' – 10'	BB
ORNAMENTAL TREES					
HC	1	HALESIA CAROLINA	SILVERBELL	6' – 8'	BB
MA	0	MALUS	APPLE	6' – 8'	BB
MG	2	METASEQUOIA GLYPTOSTROBOIDES	DAWN REDWOOD	2 – 2 1/2" CAL.	BB

LEGEND:

- EXISTING SANITARY SEWER & MANHOLE
- PROPOSED SANITARY SEWER & MANHOLE
- PROPOSED SANITARY LATERAL
- EXISTING STORM SEWER & CATCH BASIN
- EXISTING WATER LINE & VALVE
- EXISTING WATER SERVICE
- PROPOSED WATER LINE & VALVE
- EXISTING FIRE HYDRANT & VALVE
- PROPOSED WATER SERVICE
- EXISTING ELECTRIC
- PROPOSED ELECTRIC
- EXISTING OVERHEAD WIRE
- x 451.25 EXISTING SPOT ELEVATION
- x 451.25 PROPOSED SPOT ELEVATION
- EXISTING CONTOURS
- PROPOSED CONTOURS
- EXISTING GAS LINE & VALVE
- PROPOSED GAS LINE
- PROPOSED GAS SERVICE
- EXISTING TELEPHONE
- PROPOSED TELEPHONE
- EXISTING LIGHTING FEATURES
- EXISTING UTILITY POLE
- EXISTING CURB AND DEPRESSED CURB
- PROPOSED CURB & CURB TRANSITION
- EXISTING SIGNS
- EXISTING FENCE
- PROPOSED FENCE
- EXISTING TREE LINE
- SOIL LINE
- EXISTING RIP RAP
- PROPOSED LARGE DECIDUOUS TREES
- PROPOSED EVERGREEN TREES
- PROPOSED ORNAMENTAL TREE
- PROPOSED DECIDUOUS SHRUB
- PROPOSED EVERGREEN SHRUB
- PROPOSED GROUNDCOVER/PERENNIAL

GRAPHIC SCALE 1" = 30'
0 30' 60' 90'

ISSUED FOR BID JULY 19, 2023
NOT FOR CONSTRUCTION

Revision	Date	Description	Rev.By
1	8/9/23	Addendum 1	AMK

This document and all information and work product represented by and contained herein, is the sole and exclusive property of McCarthy Engineering Associates, Inc. The information contained herein is licensed only for limited use by the intended recipient, and no license, permission or authority is extended, directly or implied, to any party without the express written permission of McCarthy Engineering Associates, Inc. Copyright, 2021, McCarthy Engineering Associates, Inc. All rights reserved

McCARTHY ENGINEERING ASSOCIATES, INC.
www.McCarthy-Engineering.com
Phone: 610.373.8001
2500 East High Street
Suite 630
Pottstown, PA 19464
555 Van Reed Road
Suite 2
Wyomissing, PA 19610

SEAL: COMMONWEALTH OF PENNSYLVANIA REGISTERED PROFESSIONAL JAMES C. McCARTHY ENGINEER PE-051494E

ISSUED FOR BID
LANDSCAPING PLAN
" PUBLIC WORKS FACILITY "

Client: WYOMISSING BOROUGH
Location: WYOMISSING BOROUGH, BERKS COUNTY, PENNSYLVANIA
Date: JULY 19, 2023

DRAWN BY:	PROJ. MANAGER:
AMK	JCM
PRINCIPAL:	SCALE:
JCM	1"=30'

SHEET NO. C5.0

PLAN NO. 230004-08- LA-05

Plot Date: 8/9/2023 11:48 AM P:\04_Wyomissing\2023\08-Public Works Descope\Design\CADD Files\P-Landscape.dwg

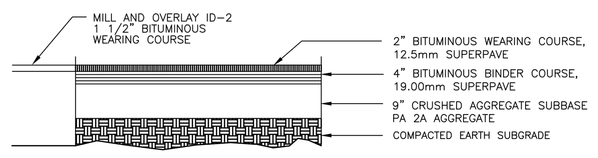

HEAVING DUTY
PAVING SECTIONS

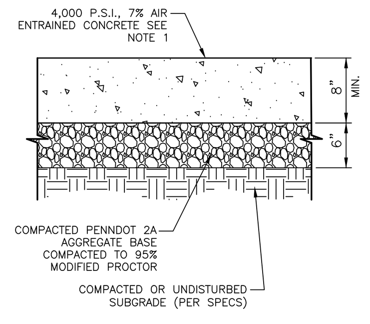

NOTE:
SEE CONCRETE CONTROL JOINT DETAIL

HEAVY DUTY CONCRETE PAVEMENT PAD SECTION
FOR GENERATOR PAD AND FUEL TANK AREA

NOTE:
1. SLABS SHALL BE TREATED WITH ONE OF THE FOLLOWING:
   - BARRICADE WB244, EUCLID CHEMICAL CO.
   - SS HARDEN X SI, SEALSOURCE INTERNATIONAL, LLC.
2. REINFORCE CONCRETE WITH MACRO SYNTHETIC FIBER REINFORCEMENT AS SPECIFIED BY THE GEOTECHNICAL ENGINEER.
3. F'C=4000 PSI MINIMUM.

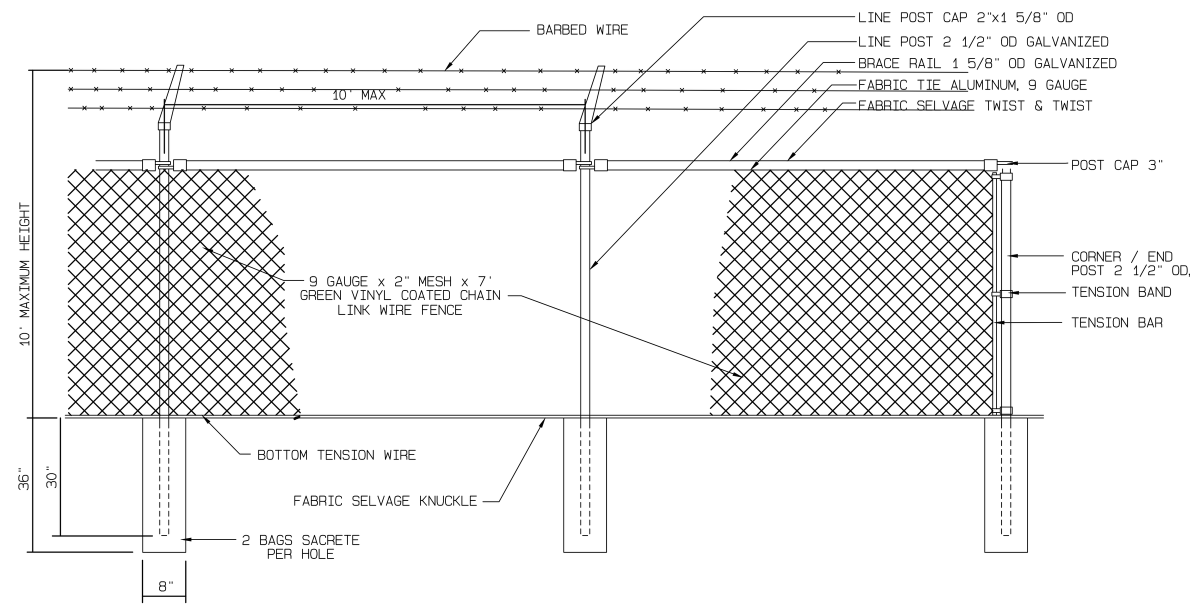

SECURITY FENCE DETAIL

WATER METER PIT

NOTES:
1. METER SHOULD READ IN 100 CUBIC FEET INCREMENTS.
2. PROVIDE POLYPROPYLENE OR FIBERGLASS COATED STEEL MANHOLE STEPS @ 12" O.C. AS MANUFACTURED BY M.A. INDUSTRIES, INC. OR APPROVED EQUAL.
3. PROVIDE EXTERIOR DOOR (TRAFFIC LOAD TYPE) BILCO TYPE J-3AL OR APPROVED EQUAL ACCESS DOOR SHALL BE EQUIPPED WITH COMPRESSION SPRING OPERATORS. AUTOMATIC HOLD OPEN ARM AND RELEASE HANDLE, SNAP LOCK WITH REMOVABLE HANDLE SHALL BE PROVIDED. A 1 1/2" DRAINAGE COUPLING AND PVC DRAIN PIPE TO THE SURFACE SHALL BE PROVIDED FOR DRAINING THE CHANNEL FRAME. STAINLESS STEEL HINGES AND PINS SHALL BE PROVIDED.
4. PROVIDE FRICTION CLAMP AND A-LOK TYPE RUBBER GASKET SEAL TYPICAL AT EACH PIPE OPENING IN BOX.

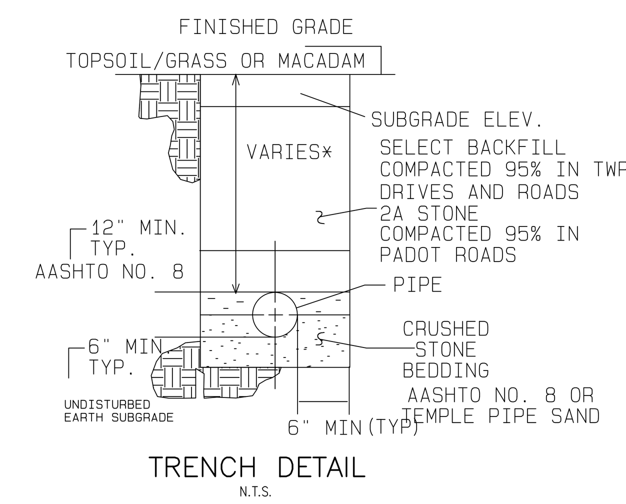

TRENCH DETAIL
N.T.S.

NOTES:
1. ALL BACKFILL MATERIAL IS SUBJECT TO AUTHORITY AND PENNDOT APPROVAL.
2. CLASS A BEDDING: APPROVED TEMPLE PIPE SAND FOR PVC PIPE
3. SELECT BACKFILL: CLEAN DRY EARTH WITH A MAXIMUM STONE SIZE OF 2-INCHES.
4. ORDINARY BACKFILL: CLEAN DRY EARTH WITH A MAXIMUM STONE SIZE OF 6-INCHES.
* - WITHIN ROAD RIGHT-OF-WAY, SURFACE RESTORATION, BACKFILL MATERIALS, AND METHODS SHALL MEET THE APPROPRIATE MUNICIPAL OR PENN-DOT REQUIREMENTS WHICH IS 2A COARSE AGGREGATE.

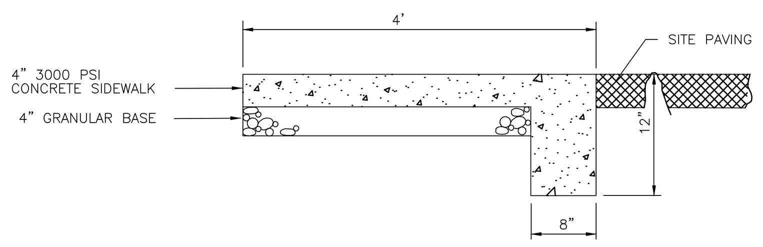

TYPICAL SIDEWALK DETAIL

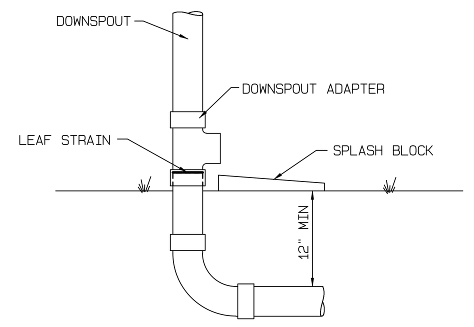

DOWNSPOUT DETAIL

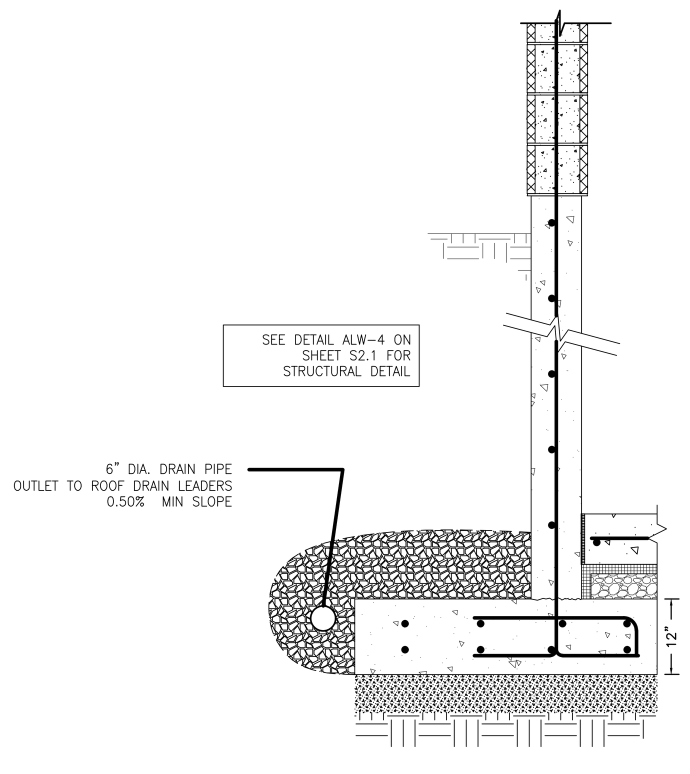

PERIMETER DRAIN DETAIL

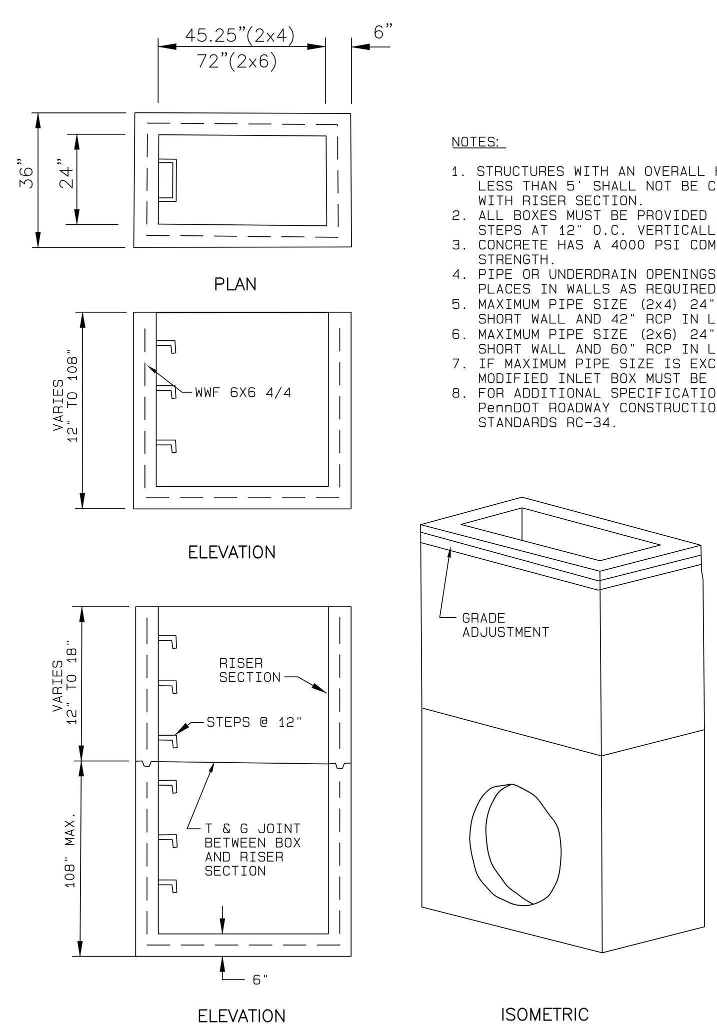

NOTES:
1. STRUCTURES WITH AN OVERALL HEIGHT LESS THAN 5' SHALL NOT BE CONSTRUCTED WITH RISER SECTION.
2. ALL BOXES MUST BE PROVIDED WITH STEPS AT 12" O.C. VERTICALLY.
3. CONCRETE HAS A 4000 PSI COMPRESSIVE STRENGTH.
4. PIPE OR UNDERDRAIN OPENINGS TO BE PLACES IN WALLS AS REQUIRED.
5. MAXIMUM PIPE SIZE (2x4) 24" RCP IN SHORT WALL AND 42" RCP IN LONG WALL.
6. MAXIMUM PIPE SIZE (2x6) 24" RCP IN SHORT WALL AND 60" RCP IN LONG WALL.
7. IF MAXIMUM PIPE SIZE IS EXCEEDED A MODIFIED INLET BOX MUST BE UTILIZED.
8. FOR ADDITIONAL SPECIFICATIONS, SEE PennDOT ROADWAY CONSTRUCTION STANDARDS RC-34.

2x4 OR 2x6 PRECAST INLET BOX

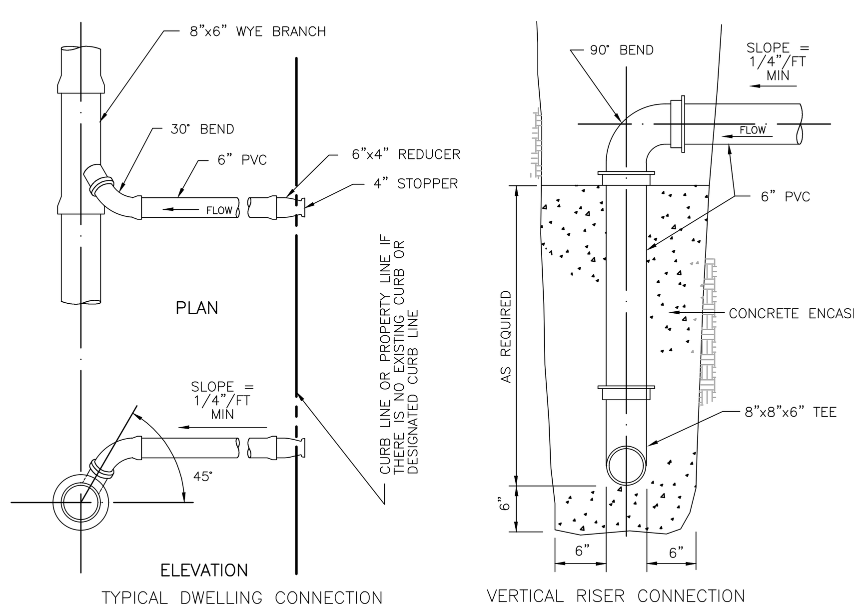

SANITARY SEWER LATERAL CONNECTIONS

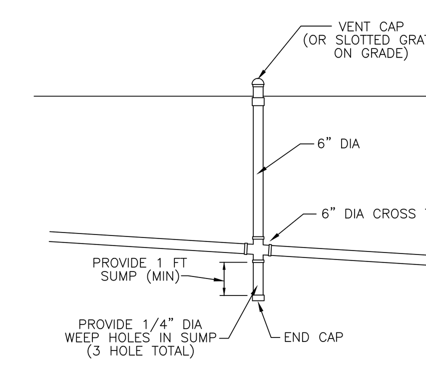

IN-LINE CLEAN-OUT DETAIL

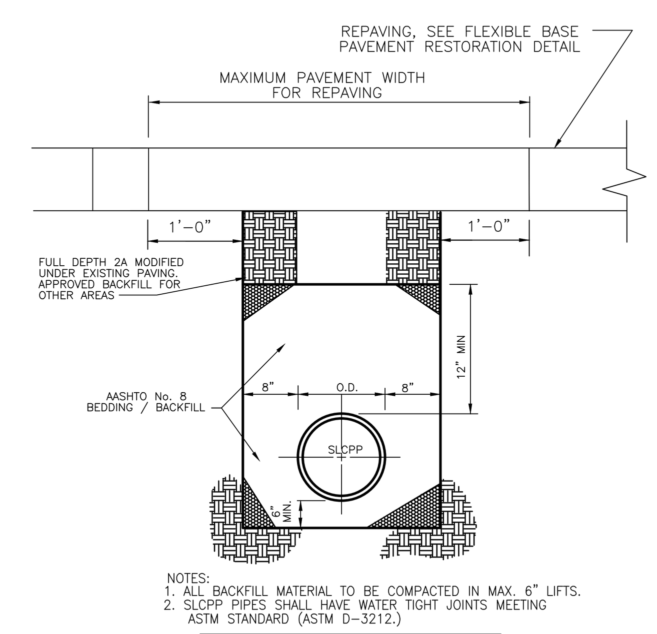

NOTES:
1. ALL BACKFILL MATERIAL TO BE COMPACTED IN MAX. 6" LIFTS.
2. SLCPP PIPES SHALL HAVE WATER TIGHT JOINTS MEETING ASTM STANDARD (ASTM D-3212.)

TRENCH DEPTH	MAXIMUM PAVEMENT WIDTH-REPAVING
0' - 12'	O.D. + 5'-4"
12' - 18'	O.D. + 6'-4"
18' - 34'	O.D. + 7'-4"

STORM SEWER BEDDING AND BACKFILL FOR CORRUGATED POLYETHYLENE PIPE

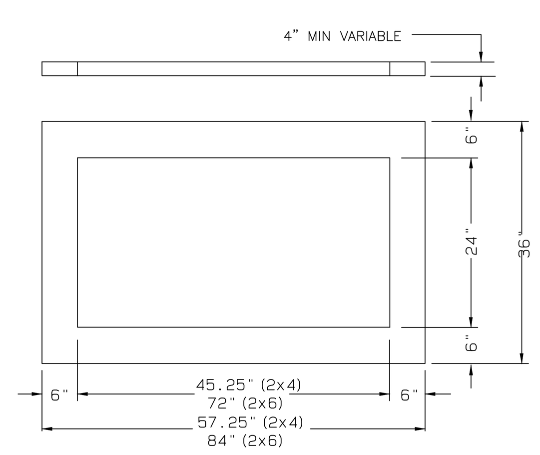

GRADE ADJUST RING (PRECAST)

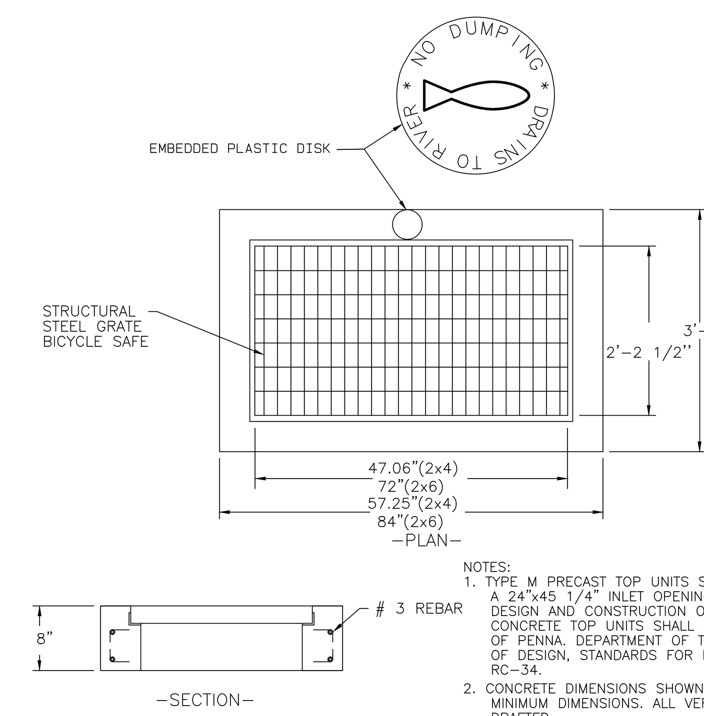

NOTES:
1. TYPE M PRECAST TOP UNITS SHALL BE USED OVER A 24"x45 1/4" INLET OPENING THE MATERIALS. DESIGN AND CONSTRUCTION OF PRECAST REINFORCING CONCRETE TOP UNITS SHALL MEET THE COMMONWEALTH OF PENNA. DEPARTMENT OF TRANSPORTATION BUREAU OF DESIGN, STANDARDS FOR ROADWAY CONSTRUCTION RC-34.
2. CONCRETE DIMENSIONS SHOWN ARE NOMINAL AND MINIMUM DIMENSIONS. ALL VERTICAL SURFACES ARE DRAFTED.
3. TOP UNITS ARE PROVIDED WITH DEFORMED STEEL REINF.
4. USE MASTIC OR EQUIVALENT TO SEAL ALL JOINTS IN THE INLET BOX AND TOP UNIT IN ALL INLETS LOCATED IN GRASS AREAS AND PCSWM BMP AREAS.
5. MANHOLES AND INLETS MUST CONFROM TO THE STANDARDS ESTABLISHED BY PennDOT AND MUST BE SUPPLIED BY A PennDOT BULLETIN 15 APPROVED SUPPLIER

TYPE M INLET

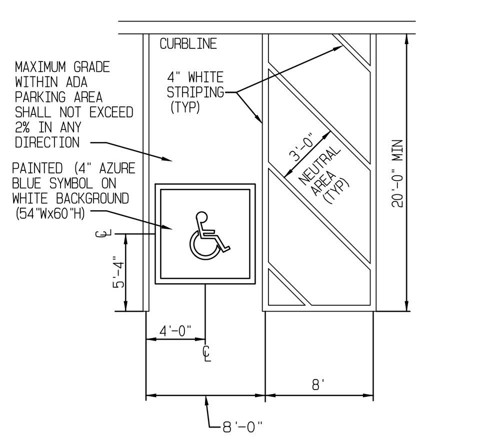

NOTES:
1. CURB RAMPS MAY NOT EXTEND INTO ANY PORTION OF THE PARKING SPACE OR ASSOCIATED STRIPED ISLAND.
2. CURB RAMPS, PAVEMENT MARKINGS, & APPLICABLE SIGNAGE SHALL BE CONSTRUCTED IN ACCORDANCE WITH LATEST ADA ACCESSIBILITY GUIDELINES.

ADA ACCESSIBLE PARKING SPACE STRIPING DETAIL

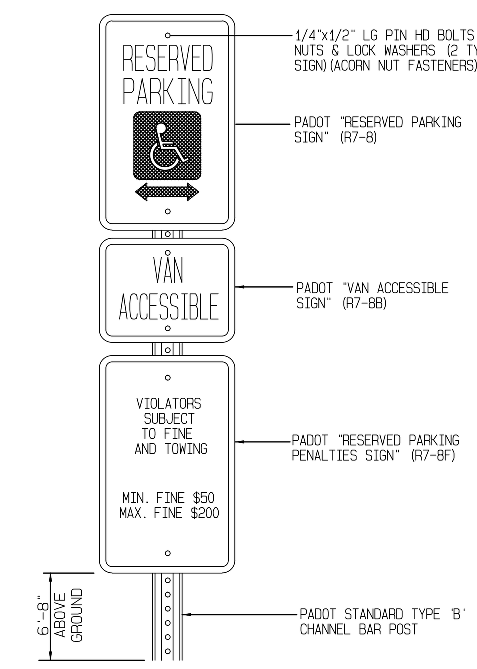

NOTES:
1. POST MOUNTED SIGNS SHALL BE TYPE B CHANNEL BAR POSTS AND SHALL CONFORM TO PADOT "TRAFFIC CONTROL SIGNING STANDARDS" TC-8702B SHEET 8 THRU 11 OF 11. APPROPRIATE POSTS SHALL BE SELECTED BASED ON THE SIZE OF THE SIGN USING THE SELECTION TABLES CONTAINED THEREIN.
2. SIGN INSTALLATION SHALL BE IN ACCORDANCE WITH PADOT "TRAFFIC CONTROL SIGNING STANDARDS" TC-8702B SHEET 8 THRU 11, AS AMENDED.
3. SEE CIVIL PLANS FOR EXACT LOCATION, TYPE AND SIZE OF SIGNS. ALL REGULATORY (R SERIES), SIGNS SHALL CONFORM TO THE PADOT "HANDBOOK OF APPROVED SIGNS", PUBLICATION 236M, AS AMENDED, UNLESS OTHERWISE SPECIFIED.
4. SIGNS SHALL BE SETBACK 2.0' FROM SURB LINES OR OTHER OBSTRUCTIONS AS MEASURED FROM THE FACE/EDGE OF THE SIGN.
5. RESERVED PARKING SPACE SIGNS SHALL CONFORM TO DEPARTMENT OF JUSTICE "ADA STANDARDS FOR ACCESSIBLE DESIGN" AS AMENDED.
6. ALL SIGNS SHALL BE INSTALLED WITH ACORN NUT FASTENERS.

RESERVED PARKING SPACE w/ PENALTIES & VAN ACCESSIBLE SIGNS

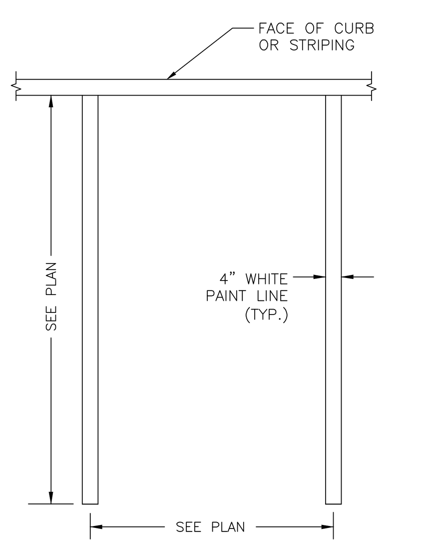

NOTES:
1. PROVIDE 2 COATS OF PAINT ON ALL SURFACES.
2. SEE PLAN FOR SPACE LOCATION AND DIMENSIONS.

TYPICAL PARKING SPACE DETAIL

CORRUGATED HDPE/PP BELL GRAVITY APPLICATIONS

A. BELL END ACCEPTS CORRUGATED HDPE/PP DUAL WALL PIPE–ADS/HANCOR INC. SPECIFICATIONS IN 4", 6", 8", 10", 12", 15", 18", 21", 24", AND 30" SIZES.

B. CURVATURE VARIES WITH MAINLINE DIAMETERS.

C. SPIGOT END PVC SDR 35, ASTM D3034 DIAMETERS: 4", 6", 8", 10", 12", 15", 18", 21", 24" AND 30"

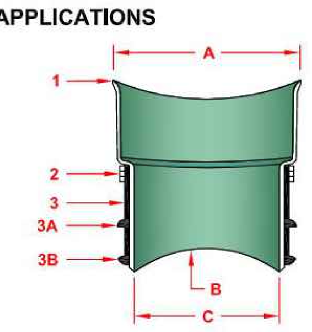

PART	PART NAME	MATERIALS
1	HUB ADAPTOR	PVC SDR 26 ASTM D3034
2	SECURING CLAMP*	BAND SS #301
		SCREW SS #305
		HOUSING SS #301
3	RUBBER SLEEVE (AVAILABLE IN NITRILE AND EPDM BY SPECIAL ORDER)	ASTM F477
3A	UPPER SEGMENT**	
3B	LOWER SEGMENT***	
4	(NOT SHOWN) ADS/HANCOR INC. SUPPLIES VALLEY GASKET	

* OPTIONAL: #316 STAINLESS STEEL BAND, SCREW AND HOUSING
** DISTANCE BETWEEN 4A AND 4B WILL VARY BY PRODUCT TYPE
*** WILL NOT APPEAR ON RUBBER SLEEVES FOR CONCRETE OR CLAY PIPE

INSERTA TEE SIZE		HOLE DIAMETER	
4"	(100 mm)	4 ½"	(114 mm)
6"	(150 mm)	6 ½"	(165 mm)
8"	(200 mm)	8 ¾"	(222 mm)
10"	(250 mm)	10 7/8"	(276 mm)
12"	(300 mm)	12 7/8"	(327 mm)
15"	(375 mm)	15 13/16"	(402 mm)
18"	(450 mm)	19 3/16"	(503 mm)
21"	(525 mm)	22 9/16"	(573 mm)
24"	(600 mm)	25 5/16"	(643 mm)
30"	(750 mm)	32 17/32"	(826 mm)

NOTE: RECOMMENDED METHOD OF CUTTING HOLE IS WITH HOLE SAW FOR PVC AND OTHER PLASTICS, AND DIAMOND BIT FOR CONCRETES, CLAY, FRP AND D.I. (SEE INSTALLATION INSTRUCTIONS. HOLE SAWS ARE AVAILABLE FOR PURCHASE OR RENT.)

INSERTA TEE

INSERTA TEE | PO BOX 714
CORNELIUS, OR 97116
PH:(503) 357-2110 FAX:(503) 359-5417
SALES@INSERTATEE.COM

CORRUGATED HDPE/PP BELL GRAVITY APPLICATION SPECIFICATIONS

SCALE:	NTS
DATE:	9/12/2013
DRAWN BY:	KLJ

THIS PRINT DISCLOSES SUBJECT MATTER IN WHICH INSERTA-TEE HAS PROPRIETARY RIGHTS. THE RECEIPT OR POSSESSION OF THIS PRINT DOES NOT CONFER, TRANSFER, OR LICENSE THE USE OF THE DESIGN OR TECHNICAL INFORMATION SHOWN HEREIN. REPRODUCTION OF THIS PRINT OR ANY INFORMATION CONTAINED HEREIN, OR MANUFACTURE OF ANY ARTICLE HEREFROM, FOR THE DISCLOSURE TO OTHERS IS FORBIDDEN, EXCEPT BY SPECIFIC WRITTEN PERMISSION FROM INSERTA-TEE. © 2013 INSERTA TEE

ISSUED FOR BID JULY 19, 2023
NOT FOR CONSTRUCTION

Revision	Date	Description	Rev.By
1	8/8/23	Addendum 1	AMK

This document and all information and work product represented by and contained herein, is the sole and exclusive property of McCarthy Engineering Associates, Inc. The information contained herein is licensed only for limited use by the intended recipient, and no license, permission or authority is extended, directly or implied, to any party without the express written permission of McCarthy Engineering Associates, Inc. Copyright 2021, McCarthy Engineering Associates, Inc. All rights reserved

McCARTHY ENGINEERING ASSOCIATES, INC.
555 Van Reed Road
Suite 2
Wyomissing, PA 19610
www.McCarthy-Engineering.com
Phone: 610.373.8001
2500 East High Street
Suite 630
Pottstown, PA 19464

SEAL:

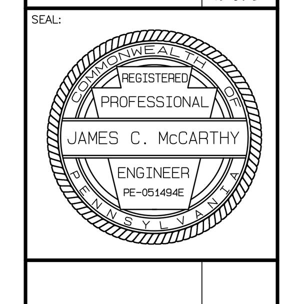

ISSUED FOR BID
CONSTRUCTION DETAILS
" PUBLIC WORKS FACILITY "

Client: WYOMISSING BOROUGH
Location: WYOMISSING BOROUGH, BERKS COUNTY, PENNSYLVANIA
Date: JULY 19, 2023

DRAWN BY:	PROJ. MANAGER:
AMK	JCM
PRINCIPAL:	SCALE:
JCM	NOT TO SCALE

SHEET NO.
C6.0

PLAN NO.
230004-08- CD-06

Plot Date: 8/9/2023 11:49 AM P:\04_Wyomissing\2023\08-Public Works Descope\Design\CADD Files\P-Details.dwg

GENERAL NOTES:

1. THIS PLAN IS FOR IMPLEMENTATION OF E&S CONTROL MEASURES & FACILITIES ONLY. THIS PLAN SHOULD NOT BE USED FOR CONSTRUCTION OF NON-E&S CONTROL IMPROVEMENTS.

SOILS LEGEND

UmB – URBAN LAND-DUFFIELD COMPLEX, 0 TO 8 PERCENT SLOPES (ENTIRE SITE)

RECEIVING WATERSHED AND CHAPTER 93 CLASSIFICATION:

SCHUYLKILL RIVER – WWF,MF

ONECALL NOTES:

Pennsylvania 811

PENNSYLVANIA ACT 287, AS AMENDED BY ACT 121 REQUIRES NOTIFICATION OF EXCAVATORS, DESIGNERS, OR ANY PERSON PREPARING TO DISTURB THE EARTH'S SURFACE ANYWHERE IN THE COMMONWEALTH.

ACT 287 UNDERGROUND UTILITY PROTECTION ACT, AS AMENDED BY ACT 121

McCARTHY ENGINEERING ASSOCIATES, INC. HEREBY STATES THAT, PURSUANT TO THE PROVISIONS OF ACT NO. 121 OF OCTOBER 2008, OF THE PENNSYLVANIA LEGISLATURE, IT HAS PERFORMED THE FOLLOWING IN PREPARING THESE DRAWINGS REQUIRING EXCAVATION OR DEMOLITION WORK AT SITES WITHIN THE POLITICAL SUBDIVISION(S) SHOWN ON THE DRAWINGS:

1. PURSUANT TO SECTION 4, CLAUSE (2) OF SAID ACT, McCARTHY ENGINEERING ASSOCIATES, INC. REQUESTED FROM EACH USER'S OFFICE DESIGNATED ON SUCH LIST PROVIDED BY THE ONE CALL SYSTEM NOTIFICATION, THE INFORMATION PRESCRIBED BY SECTION 4, CLAUSE (2) OF SAID ACT, NOT LESS THAN (10) NOR MORE THAN (90) WORKING DAYS BEFORE FINAL DESIGN TO BE COMPLETED.
2. PURSUANT TO SECTION 4, CLAUSE (5) OF SAID ACT, McCARTHY ENGINEERING ASSOCIATES, INC. HAS MET THEIR OBLIGATIONS OF CLAUSE (2) BY CALLING THE ONE CALL SYSTEM SERVING THE LOCATION WHERE EXCAVATION IS TO BE PERFORMED.
3. PURSUANT TO SECTION 4, CLAUSE (3) OF SAID ACT, McCARTHY ENGINEERING ASSOCIATES, INC. HAS SHOWN UPON THESE DRAWINGS "THE POSITION AND TYPE OF EACH LINE, AS DERIVED PURSUANT TO THE REQUEST MADE AS REQUIRED BY CLAUSE (2), THE SERIAL NUMBER PROVIDED BY THE ONE CALL SYSTEM, THE TOLL-FREE ONE CALL SYSTEM PHONE NUMBER, AND THE NAME OF THE USER, THE USER'S DESIGNATED OFFICE ADDRESS AND PHONE NUMBER AS SHOWN ON THE LIST REFERRED TO IN SECTION 4, CLAUSE (5) OF SAID ACT.

AND McCARTHY ENGINEERING ASSOCIATES, INC. DOES NOT MAKE ANY REPRESENTATION, WARRANTY, ASSURANCE OR GUARANTEE THAT THE INFORMATION RECEIVED PURSUANT TO SAID REQUEST AND AS REFLECTED ON THESE DRAWINGS IS CORRECT OR ACCURATE, BUT McCARTHY ENGINEERING ASSOCIATES, INC., IS REFLECTING SAID INFORMATION ON THESE DRAWINGS ONLY DUE TO THE REQUIREMENTS OF THE SAID ACT NO. 121 OF OCTOBER 2008.

ONE CALL SYSTEM SERIAL NO. NOTIFICATION BY McCARTHY ENGINEERING ASSOCIATES, INC..

DATE: JUNE 23, 2021

ONE CALL SYSTEM SERIAL NUMBER: 20211730550

UNDERGROUND UTILITY USERS:

UNDERGROUND UTILITY LOCATIONS ARE APPROXIMATE AND WERE DETERMINED FROM VISIBLE LOCATION, ACT 287, AS AMENDED BY ACT 121, UTILITY RESPONSES AND/OR BEST AVAILABLE PLAN INFORMATION.

McCARTHY ENGINEERING ASSOCIATES, INC. CANNOT GUARANTEE THE EXACT LOCATION OF ANY UNDERGROUND UTILITIES OR STRUCTURES. AN EXACT LOCATION CAN ONLY BE OBTAINED BY SUBSURFACE EXPLORATION, WHICH IS NOT A PART OF THIS CONTRACT PERFORMANCE.

PA ONE CALL SYSTEM INFORMATION:

PENNSYLVANIA ACT 287, AS AMENDED BY ACT 121, REQUIRES THREE (3) WORKING DAYS NOTICE FOR CONSTRUCTION PHASE AND FIVE (5) WORKING DAYS NOTICE IN DESIGN STAGE.

PA ONE CALL PHONE NUMBER: 1-800-242-1776

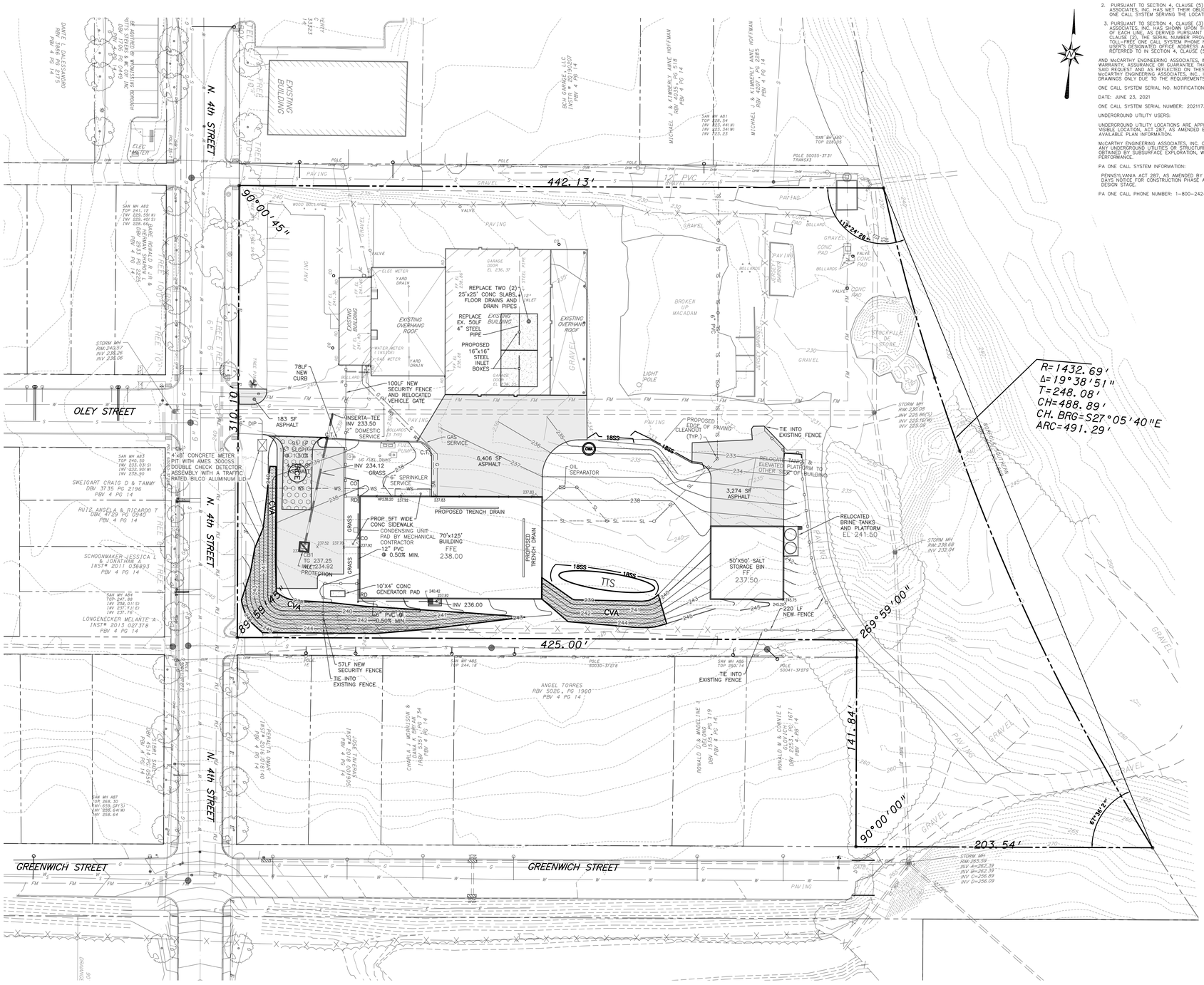

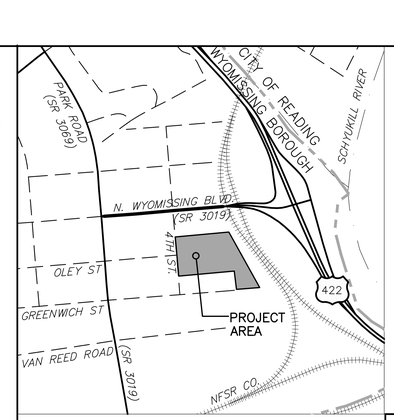

LOCATION MAP
SCALE IN FEET
500 0 500 1000

LEGEND:

- 12SS — 12" COMPOST FILTER SOCK
- 18SS — 18" COMPOST FILTER SOCK
- 24SS — 24" COMPOST FILTER SOCK
- ORANGE CONSTRUCTION FENCE
- SOIL LINE
- LIMIT OF DISTURBANCE
- NPDES PERMIT BOUNDARY
- DIVERSION FILTER LOG
- 100 — TEMPORARY GRADING
- RIP RAP LINED SWALE
- RCE — ROCK CONSTRUCTION ENTRANCE
- TTS / 18SS — TEMPORARY TOPSOIL STOCKPILE
- ROCK FILTER
- CWA — CONCRETE WASHOUT AREA
- CURBED ROADWAY STORM INLET PROTECTION AND BERM(S)
- SILT SACK
- TEMPORARY CHANNEL LINING
- C.V.A. — CRITICAL VEGETATIVE AREA (C.V.A.) EAST COAST EROSION CONTROL BLANKET ECSC-2 MATTING OR EQUAL (TO BE USED ON ALL SLOPES 3:1 AND STEEPER)
- CLEANOUT STAKE

SITE LEGEND:

- S — EXISTING SANITARY SEWER & MANHOLE
- SL — PROPOSED SANITARY LATERAL
- EXISTING STORM SEWER & CATCH BASIN
- W — EXISTING WATER LINE & VALVE
- W — PROPOSED WATER LINE & VALVE
- EXISTING FIRE HYDRANT & VALVE
- WS — PROPOSED WATER SERVICE
- E — EXISTING ELECTRIC
- E — PROPOSED ELECTRIC
- OHW — EXISTING OVERHEAD WIRE
- x 451.25 — EXISTING SPOT ELEVATION
- x 451.25 — PROPOSED SPOT ELEVATION
- 450 — EXISTING CONTOURS
- 450 / 448 — PROPOSED CONTOURS
- G — EXISTING GAS LINE & VALVE
- G — PROPOSED GAS LINE
- PROPOSED GAS SERVICE
- T — EXISTING TELEPHONE
- T — PROPOSED TELEPHONE
- EXISTING LIGHTING FEATURES
- EXISTING UTILITY POLE
- DC — EXISTING CURB AND DEPRESSED CURB
- C.T. — PROPOSED CURB & CURB TRANSITION
- EXISTING SIGNS
- EXISTING FENCE
- PROPOSED FENCE
- EXISTING TREE LINE
- EXISTING RIP RAP

GRAPHIC SCALE
1" = 30'
0 30 60 90'

ISSUED FOR BID JULY 19, 2023
NOT FOR CONSTRUCTION

Revision	Date	Description	Rev.By
1	8/9/23	Addendum 1	AMK

This document, and all information and work products represented by and contained herein, is the sole and exclusive property of McCarthy Engineering Associates, Inc. and is not to be used for any purpose other than that for which it is intended. Any intended recipient, and not loaners, permission or authority is extended, directly or implied, to any party without title.

McCARTHY ENGINEERING ASSOCIATES, INC.
555 Von Reed Road Suite 2 Wyomissing, PA 19610
2500 East High Street Suite 630 Pottstown, PA 19464
www.McCarthy-Engineering.com
Phone: 610.374.8001

SEAL:
COMMONWEALTH OF PENNSYLVANIA REGISTERED PROFESSIONAL JAMES C. McCARTHY ENGINEER PE-051404E

ISSUED FOR BID
E&S CONTROL PLAN
" PUBLIC WORKS FACILITY "

Client: WYOMISSING BOROUGH
Location: WYOMISSING BOROUGH, BERKS COUNTY, PENNSYLVANIA
Date: JULY 19, 2023

DRAWN BY:	PROJ. MANAGER:
AMK	JCM
PRINCIPAL:	SCALE:
JCM	1"=30'

SHEET NO.
C7.0

PLAN NO.
230004-08- ES-07

Plot Date: 8/9/2023 1:07 PM P:\04-Wyomissing\2023\08-Public Works Dessoan\Design\CADD Files\P-E&S.dwg

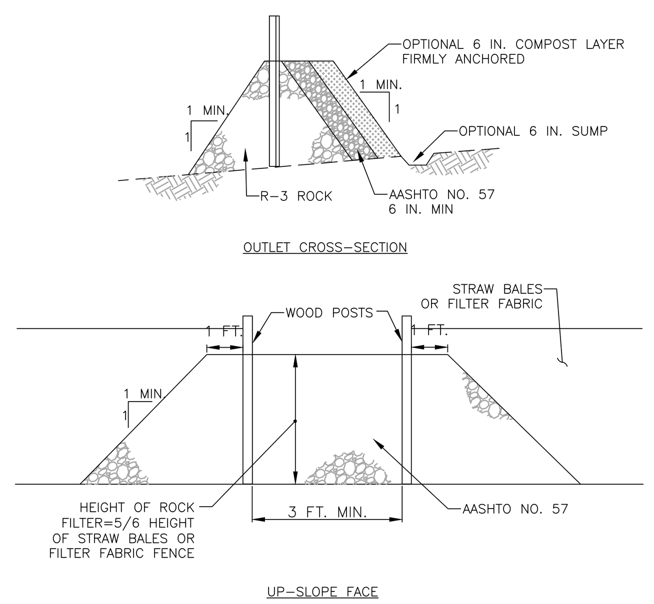

NOTES:

A ROCK FILTER OUTLET SHALL BE INSTALLED WHERE FAILURE OF A SILT FENCE OR STRAW BALE BARRIER HAS OCCURRED DUE TO CONCENTRATED FLOW. ANCHORED COMPOST LAYER SHALL BE USED ON UPSLOPE FACE IN HQ AND EV WATERSHEDS.

SEDIMENT SHALL BE REMOVED WHEN ACCUMULATIONS REACH 1/3 THE HEIGHT OF THE OUTLET.

ROCK FILTER OUTLET

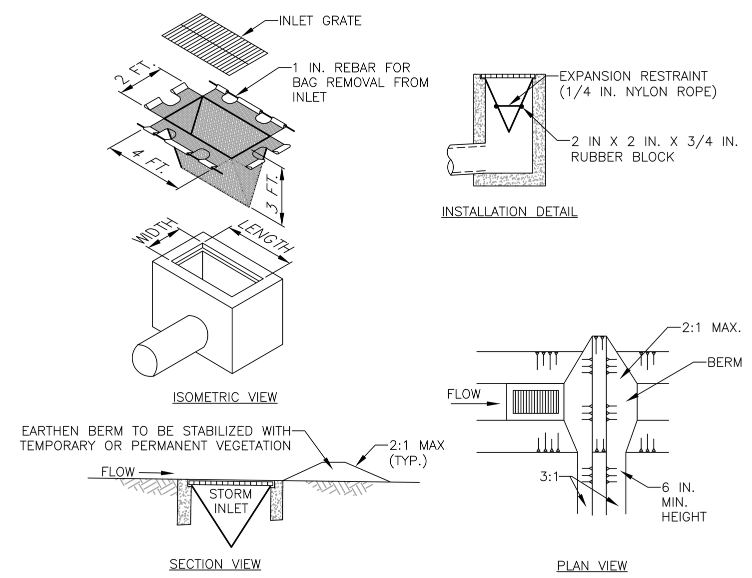

NOTES:

MAXIMUM DRAINAGE AREA = 1/2 ACRE.

INLET PROTECTION SHALL NOT BE REQUIRED FOR INLET TRIBUTARY TO SEDIMENT BASIN OR TRAP. BERMS SHALL BE REQUIRED FOR ALL INSTALLATIONS.

ROLLED EARTHEN BERM IN ROADWAY SHALL BE MAINTAINED UNTIL ROADWAY IS STONED. ROAD SUBBASE BERM ON ROADWAY SHALL BE MAINTAINED UNTIL ROADWAY IS PAVED. EARTHEN BERM IN CHANNEL SHALL BE MAINTAINED UNTIL PERMANENT STABILIZATION IS COMPLETED OR REMAIN PERMANENTLY.

AT A MINIMUM, THE FABRIC SHALL HAVE A MINIMUM GRAB TENSILE STRENGTH OF 120 LBS., A MINIMUM BURST STRENGTH OF 200 PSI, AND A MINIMUM TRAPEZOIDAL TEAR STRENGTH OF 50 LBS. FILTER BAGS SHALL BE CAPABLE OF TRAPPING ALL PARTICLES NOT PASSING A NO. 40 SIEVE.

INLET FILTER BAGS SHALL BE INSPECTED ON A WEEKLY BASIS AND AFTER EACH RUNOFF EVENT. BAGS SHALL BE EMPTIED AND RINSED OR REPLACED WHEN HALF FULL OR WHEN FLOW CAPACITY HAS BEEN REDUCED SO AS TO CAUSE FLOODING OR BYPASSING OF THE INLET. DAMAGED OR CLOGGED BAGS SHALL BE REPLACED. A SUPPLY SHALL BE MAINTAINED ON SITE FOR REPLACEMENT OF BAGS. ALL NEEDED REPAIRS SHALL BE INITIATED IMMEDIATELY AFTER THE INSPECTION. DISPOSE ACCUMULATED SEDIMENT AS WELL AS ALL USED BAGS ACCORDING TO THE PLAN NOTES.

DO NOT USE ON MAJOR PAVED ROADWAYS WHERE PONDING MAY CAUSE TRAFFIC HAZARDS.

FILTER BAG INLET PROTECTION – TYPE M INLET

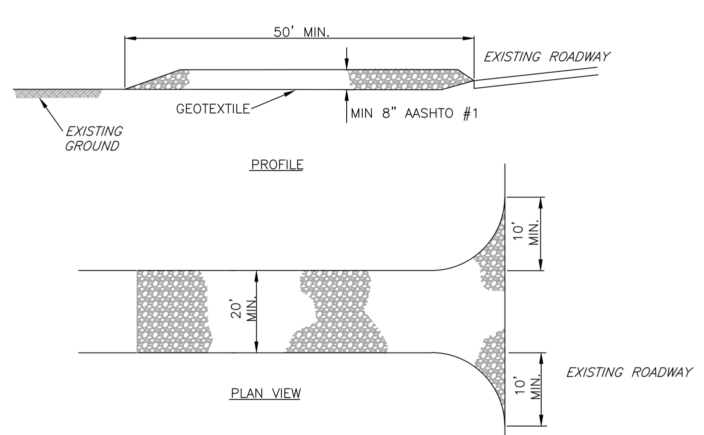

NOTES:

REMOVE TOPSOIL PRIOR TO INSTALLATION OF ROCK CONSTRUCTION ENTRANCE. EXTEND ROCK OVER FULL WIDTH OF ENTRANCE.

RUNOFF SHALL BE DIVERTED FROM ROADWAY TO A SUITABLE SEDIMENT REMOVAL BMP PRIOR TO ENTERING ROCK CONSTRUCTION ENTRANCE.

MAINTENANCE: ROCK CONSTRUCTION ENTRANCE THICKNESS SHALL BE CONSTANTLY MAINTAINED TO THE SPECIFIED DIMENSIONS BY ADDING ROCK. A STOCKPILE SHALL BE MAINTAINED ON SITE FOR THIS PURPOSE. ALL SEDIMENT DEPOSITED ON PAVED ROADWAYS SHALL BE REMOVED AND RETURNED TO THE CONSTRUCTION SITE IMMEDIATELY. IF EXCESSIVE AMOUNTS OF SEDIMENT ARE BEING DEPOSITED ON ROADWAY, EXTEND LENGTH OF ROCK CONSTRUCTION ENTRANCE BY 50 FOOT INCREMENTS UNTIL CONDITION IS ALLEVIATED OR INSTALL WASH RACK. WASHING THE ROADWAY OR SWEEPING THE DEPOSITS INTO ROADWAY DITCHES, SEWERS, CULVERTS, OR OTHER DRAINAGE COURSES IS NOT ACCEPTABLE.

ROCK CONSTRUCTION ENTRANCE

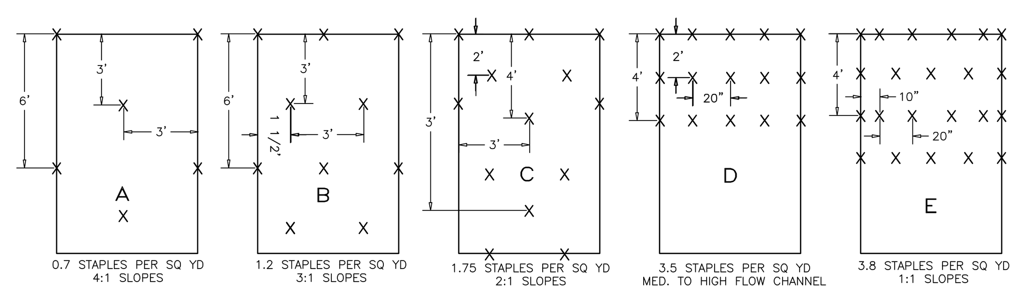

STAPLE PATTERN GUIDE

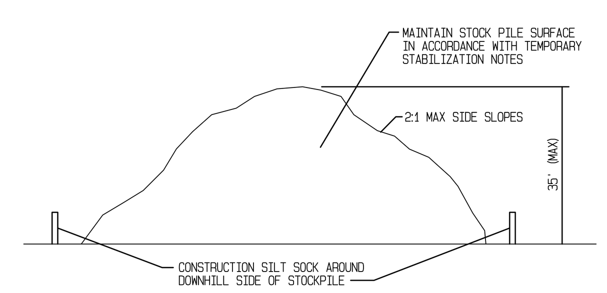

NOTES:
1. STOCKPILES TO BE STABILIZED IMMEDIATELY.
2. STOCKPILE HEIGHTS MUST NOT EXCEED 35'.
3. STOCKPILE SLOPES MUST BE 2:1 OR FLATTER.

TEMPORARY STOCKPILE DETAIL

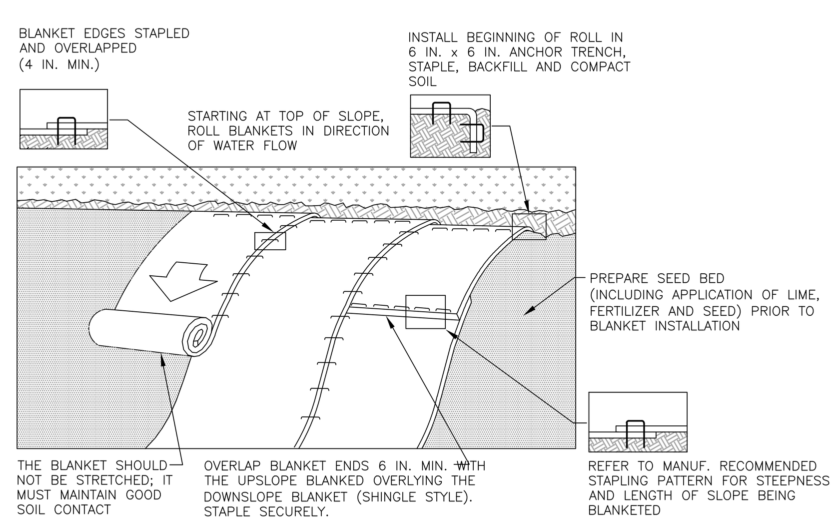

NOTES:

SEED AND SOIL AMENDMENTS SHALL BE APPLIED ACCORDING TO THE RATES IN THE PLAN DRAWINGS PRIOR TO INSTALLING THE BLANKET.

PROVIDE ANCHOR TRENCH AT TOE OF SLOPE IN SIMILAR FASHION AS AT TOP OF SLOPE.

SLOPE SURFACE SHALL BE FREE OF ROCKS, CLODS, STICKS, AND GRASS.

BLANKET SHALL HAVE GOOD CONTINUOUS CONTACT WITH UNDERLYING SOIL THROUGHOUT ENTIRE LENGTH. LAY BLANKET LOOSELY AND STAKE OR STAPLE TO MAINTAIN DIRECT CONTACT WITH SOIL. DO NOT STRETCH BLANKET.

THE BLANKET SHALL BE STAPLED IN ACCORDANCE WITH THE MANUFACTURER'S RECOMMENDATIONS.

BLANKETED AREAS SHALL BE INSPECTED WEEKLY AND AFTER EACH RUNOFF EVENT UNTIL PERENNIAL VEGETATION IS ESTABLISHED TO A MINIMUM UNIFORM 70% COVERAGE THROUGHOUT THE BLANKETED AREA. DAMAGED OR DISPLACED BLANKETS SHALL BE RESTORED OR REPLACED WITHIN 4 CALENDAR DAYS.

EROSION CONTROL BLANKET INSTALLATION

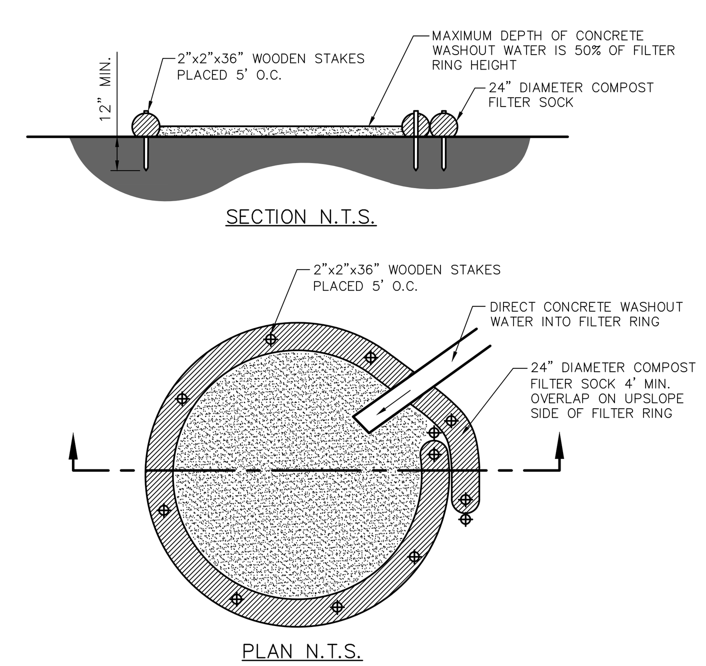

NOTES:
1. INSTALL ON FLAT GRADE FOR OPTIMUM PERFORMANCE.
2. 18" DIAMETER FILTER SOCK MAY BE STACKED ONTO DOUBLE 24" DIAMETER SOCKS IN PYRAMIDAL CONFIGURATION FOR ADDED HEIGHT.
3. A SUITABLE IMPERVIOUS GEOMEMBRANE SHALL BE PLACED AT THE LOCATION OF THE WASHOUT PRIOR TO INSTALLING THE SOCKS.

COMPOST SOCK WASHOUT INSTALLATION

TABLE 4.1
Compost Sock Fabric Minimum Specifications

Material Type	3 mil HDPE	5 mil HDPE	5 mil HDPE	Multi-Filament Polypropylene (MFPP)	Heavy Duty Multi-Filament Polypropylene (HDMFPP)
Material Characteristics	Photo-degradable	Photo-degradable	Bio-degradable	Photo-degradable	Photo-degradable
Sock Diameters	12" 18"	12" 18" 24" 32"	12" 18" 24" 32"	12" 18" 24" 32"	12" 18" 24" 32"
Mesh Opening	3/8"	3/8"	3/8"	3/8"	1/8"
Tensile Strength		26 psi	26 psi	44 psi	202 psi
Ultraviolet Stability % Original Strength (ASTM G-155)	23% at 1000 hr.	23% at 1000 hr.		100% at 1000 hr.	100% at 1000 hr.
Minimum Functional Longevity	6 months	9 months	6 months	1 year	2 years
Two-ply systems					
Inner Containment Netting			HDPE biaxial net; Continuously wound; Fusion-welded junctures; 3/4" X 3/4" Max. aperture size		
Outer Filtration Mesh			Composite Polypropylene Fabric (Woven layer and non-woven fleece mechanically fused via needle punch); 3/16" Max. aperture size		
Sock fabrics composed of burlap may be used on projects lasting 6 months or less.					

Filtrexx & JMD

TABLE 4.2
Compost Standards

Organic Matter Content	80% - 100% (dry weight basis)
Organic Portion	Fibrous and elongated
pH	5.5 - 8.0
Moisture Content	35% - 55%
Particle Size	98% pass through 1" screen
Soluble Salt Concentration	5.0 dS/m (mmhos/cm) Maximum

Filtrexx

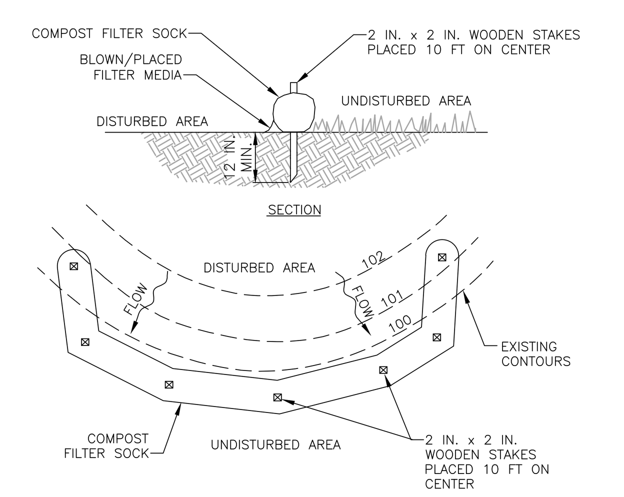

NOTES:

SOCK FABRIC SHALL MEET STANDARDS OF TABLE 4.1 OF THE PA DEP EROSION CONTROL MANUAL. COMPOST SHALL MEET THE STANDARDS OF TABLE 4.2 OF THE PA DEP EROSION CONTROL MANUAL.

COMPOST FILTER SOCK SHALL BE PLACED AT EXISTING LEVEL GRADE. BOTH ENDS OF THE BARRIER SHALL BE EXTENDED AT LEAST 8 FEET UP SLOPE AT 45 DEGREES TO THE MAIN BARRIER ALIGNMENT. MAXIMUM SLOPE LENGTH ABOVE ANY BARRIER SHALL NOT EXCEED THAT SPECIFIED FOR THE SIZE OF THE SOCK AND THE SLOPE OF ITS TRIBUTARY AREA.

TRAFFIC SHALL NOT BE PERMITTED TO CROSS COMPOST FILTER SOCKS.

ACCUMULATED SEDIMENT SHALL BE REMOVED WHEN IT REACHES 1/2 THE ABOVE GROUND HEIGHT OF THE BARRIER AND DISPOSED IN THE MANNER DESCRIBED ELSEWHERE IN THE PLAN.

COMPOST FILTER SOCKS SHALL BE INSPECTED WEEKLY AND AFTER EACH RUNOFF EVENT. DAMAGED SOCKS SHALL BE REPAIRED ACCORDING TO MANUFACTURER'S SPECIFICATIONS OR REPLACED WITHIN 24 HOURS OF INSPECTION.

BIODEGRADABLE COMPOST FILTER SOCKS SHALL BE REPLACED AFTER 6 MONTHS; PHOTODEGRADABLE SOCKS AFTER 1 YEAR. POLYPROPYLENE SOCKS SHALL BE REPLACED ACCORDING TO MANUFACTURER'S RECOMMENDATIONS.

UPON STABILIZATION OF THE AREA TRIBUTARY TO THE SOCK, STAKES SHALL BE REMOVED. THE SOCK MAY BE LEFT IN PLACE AND VEGETATED OR REMOVED. IN THE LATTER CASE, THE MESH SHALL BE CUT OPEN AND THE MULCH SPREAD AS A SOIL SUPPLEMENT.

COMPOST FILTER SOCK

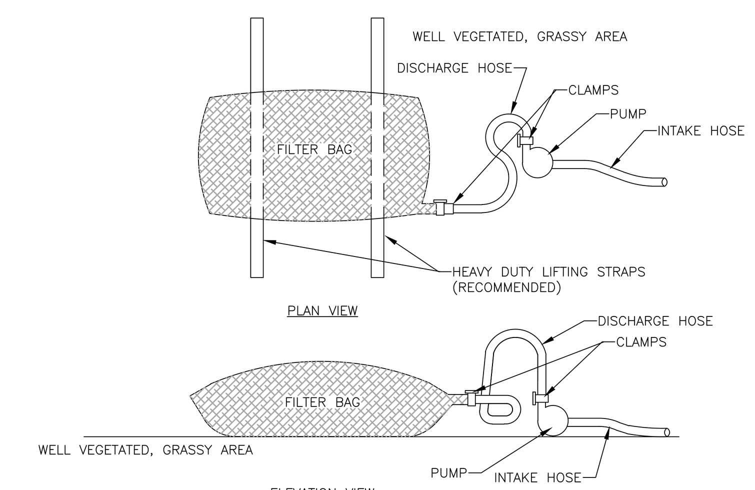

NOTES:

LOW VOLUME FILTER BAGS SHALL BE MADE FROM NON-WOVEN GEOTEXTILE MATERIAL SEWN WITH HIGH STRENGTH, DOUBLE STITCHED "J" TYPE SEAMS. THEY SHALL BE CAPABLE OF TRAPPING PARTICLES LARGER THAN 150 MICRONS. HIGH VOLUME FILTER BAGS SHALL BE MADE FROM WOVEN GEOTEXTILES THAT MEET THE FOLLOWING STANDARDS:

PROPERTY	TEST METHOD	MINIMUM STANDARD
AVG. WIDE WIDTH STRENGTH	ASTM D-4884	60 LB/IN
GRAB TENSILE	ASTM D-4632	205 LB
PUNCTURE	ASTM D-4833	110 LB
MULLEN BURST	ASTM D-3786	350 PSI
UV RESISTANCE	ASTM D-4355	70%
AOS % RETAINED	ASTM D-4751	80 SIEVE

A SUITABLE MEANS OF ACCESSING THE BAG WITH MACHINERY REQUIRED FOR DISPOSAL PURPOSES SHALL BE PROVIDED. FILTER BAGS SHALL BE REPLACED WHEN THEY BECOME 1/2 FULL OF SEDIMENT. SPARE BAGS SHALL BE KEPT AVAILABLE FOR REPLACEMENT OF THOSE THAT HAVE FAILED OR ARE FILLED. BAGS SHALL BE PLACED ON STRAPS TO FACILITATE REMOVAL UNLESS BAGS COME WITH LIFTING STRAPS ALREADY ATTACHED.

BAGS SHALL BE LOCATED IN WELL-VEGETATED (GRASSY) AREA, AND DISCHARGE ONTO STABLE, EROSION RESISTANT AREAS. WHERE THIS IS NOT POSSIBLE, A GEOTEXTILE UNDERLAYMENT AND FLOW PATH SHALL BE PROVIDED. BAGS MAY BE PLACED ON FILTER STONE TO INCREASE DISCHARGE CAPACITY. BAGS SHALL NOT BE PLACED ON SLOPES GREATER THAN 5%. FOR SLOPES EXCEEDING 5%, CLEAN ROCK OR OTHER NON-ERODIBLE AND NON-POLLUTING MATERIAL MAY BE PLACED UNDER THE BAG TO REDUCE SLOPE STEEPNESS.

NO DOWNSLOPE SEDIMENT BARRIER IS REQUIRED FOR MOST INSTALLATIONS. COMPOST BERM OR COMPOST FILTER SOCK SHALL BE INSTALLED BELOW BAGS LOCATED IN HQ OR EV WATERSHEDS, WITHIN 50 FEET OF ANY RECEIVING SURFACE WATER OR WHERE GRASSY AREA IS NOT AVAILABLE.

THE PUMP DISCHARGE HOSE SHALL BE INSERTED INTO THE BAGS IN THE MANNER SPECIFIED BY THE MANUFACTURER AND SECURELY CLAMPED. A PIECE OF PVC PIPE IS RECOMMENDED FOR THIS PURPOSE.

THE PUMPING RATE SHALL BE NO GREATER THAN 750 GPM OR 1/2 THE MAXIMUM SPECIFIED BY THE MANUFACTURER, WHICHEVER IS LESS. PUMP INTAKES SHALL BE FLOATING AND SCREENED.

FILTER BAGS SHALL BE INSPECTED DAILY. IF ANY PROBLEM IS DETECTED, PUMPING SHALL CEASE IMMEDIATELY AND NOT RESUME UNTIL THE PROBLEM IS CORRECTED.

PUMPED WATER FILTER BAG

ISSUED FOR BID JULY 19, 2023
NOT FOR CONSTRUCTION

Revision	Date	Description	Rev.By
1	8/9/23	Addendum 1	AMK

This document and all information and work product represented by and contained herein, is the sole and exclusive property of McCarthy Engineering Associates, Inc. The information contained herein is licensed only for limited use by the intended recipient, and no license, permission or authority is extended, directly or implied, to any party without the express written permission of McCarthy Engineering Associates, Inc. Copyright, 2021, McCarthy Engineering Associates, Inc. All rights reserved

McCARTHY ENGINEERING ASSOCIATES, INC.
555 Van Reed Road, Suite 2, Wyomissing, PA 19610
www.McCarthy-Engineering.com
Phone: 610.373.8001
2500 East High Street, Suite 630, Pottstown, PA 19464

SEAL: COMMONWEALTH OF PENNSYLVANIA REGISTERED PROFESSIONAL JAMES C. McCARTHY ENGINEER PE-051494E

ISSUED FOR BID
E&S CONTROL DETAILS
" PUBLIC WORKS FACILITY "

Client: WYOMISSING BOROUGH
Location: WYOMISSING BOROUGH, BERKS COUNTY, PENNSYLVANIA
Date: JULY 19, 2023

DRAWN BY:	PROJ. MANAGER:
AMK	JCM
PRINCIPAL:	SCALE:
JCM	NOT TO SCALE

SHEET NO. C7.1

PLAN NO. 230004-08- ESD-08

Plot Date: 8/9/2023 1:07 PM P:\04_Wyomissing\2023\08-Public Works Descope\Design\CADD Files\P-E&S.dwg

102.4(b)(3) E&S CONTROL PLAN/NARRATIVE PREPARER QUALIFICATIONS

The Erosion and Sedimentation (E&S) Control Plan & Narrative Plan for this Project has been prepared by the firm of McCarthy Engineering Associates, Inc. The following information is presented in accordance with pertinent regulations regarding provision of qualifications demonstrating the proper training and experience of personnel to perform preparation of E&S Control plans and narratives.

COMPANY INFORMATION

McCarthy Engineering Associates, Inc.
555 Van Reed Road
Wyomissing, PA 19610
(610) 373-8001
(610) 373-8077 (fax).
www.mccarthy-engineering.com

McCarthy Engineering Associates, Inc. is a professional consulting firm located in Wyomissing, Pennsylvania, and incorporated in 2000. The firm provides professional engineering and environmental services to clients in the land development and subdivision business.

102.4(b)(5)(i) THE EXISTING TOPOGRAPHIC FEATURES OF THE PROJECT SITE AND THE IMMEDIATE SURROUNDING AREA

The E&S Control Plan prepared for this Project depicts all existing and proposed topographical features and improvements. All existing streams, wetlands and receiving watercourses are shown on the plan. In addition, the proposed facilities relating to temporary and permanent erosion and sedimentation control are indicated. Existing Topographical information presented was obtained and compiled from actual field surveys. A U.S.G.S. Location Map is provided in the appendix of this report. A location map is also provided on the E&S Control Plan.

EXISTING TOPOGRAPHIC FEATURES OF SPOIL, BORROW AND RELATED AREAS NOT LOCATED WITHIN PRIMARY PROJECT AREA.

All soil disturbance will take place within the boundaries of the tract being developed. Areas required for spoil, borrow, stockpiling and similar activities will be confined to areas of the tract slated for development.

102.4(b)(5)(ii) THE TYPES, DEPTH, SLOPE, LOCATIONS AND LIMITATIONS OF THE SOILS

The project site is comprised of the soils types as listed below. Information relating to soils types were obtained from the Web Soil Survey for Berks County, Pennsylvania. The soils listed below are delineated on the E&S Control Plan.

- Urban Land Duffield Complex.

SOIL LIMITATIONS & RESOLUTIONS

Soil limitations and resolutions can be found in Appendix A of this report.

HYDRIC SOILS

Based on the Web Soil Survey, no hydric soils are present at 601 N. 4th Street.

102.4(b)(5)(iii) THE CHARACTERISTICS OF THE EARTH DISTURBANCE ACTIVITY, INCLUDING THE PAST, PRESENT, AND PROPOSED LAND USES AND THE PROPOSED ALTERATION TO THE PROJECT SITE

This project includes the addition of a new building, as well as several storage units, to the existing Wyomissing Public Works facility. The project is located on the east side of 4th Street, at its intersection with Oley Street. The existing land use is meadows.

The proposed improvements include a 8,750 square foot building containing offices, a mechanic shop and wash bay. In addition to these improvements, there will be a 2,500 square foot salt storage bin. The proposed building will be serviced by public sewer and water.

All proposed physical alterations to the tract have been depicted and indicated on the project plans. The limits of construction have been delineated on the E&S Control Plans and include all proposed alterations as described above. Off-tract development will include connection to water mains and other utilities.

All soil disturbances will take place within the boundaries of the tract being developed.

102.4(b)(5)(v) THE LOCATION OF WATERS OF THE COMMONWEALTH WHICH MAY RECEIVE RUNOFF WITHIN OR FROM THE PROJECT SITE AND THEIR CLASSIFICATION PURSUANT TO CHAPTER 93 OF THIS TITLE

No streams, wetlands and floodplain / floodways exist on the development site.

Receiving watercourse for this project is the Schuylkill River, which has a Chapter 93 Classification of WWF, MF (warm water fishes, migratory fishes). The Schuylkill River also has a TMDL for PCB.

102.4(b)(5)(vi) A WRITTEN DEPICTION OF THE LOCATION AND TYPE OF PERIMETER AND ON SITE BMPs USED BEFORE, DURING, AND AFTER THE EARTH DISTURBANCE ACTIVITY

The following E&S control devices will be employed for the purposes of controlling and mitigating erosion and sediment pollution on this Project, on a temporary basis during the active construction phases of the project. Proper employment, utilization and maintenance of these facilities should result in minimal negative impacts until final stabilization is achieved upon completion of the project.

CONSTRUCTION ENTRANCE / CONSTRUCTION PROTECTION FENCING

Temporary construction entrances are to be constructed of crushed stone with the mat having a minimum depth of eight inches. The entrance mat will extend a minimum of 50 feet into the project from the existing edge of pavement line on the adjacent roadway. The width of the stone mat will be at least the width of access drive.

COMPOST FILTER SOCK

Compost Filter Sock shall be installed as indicated on the project E&S Control Plan at designated downslope, perimeter areas of the tract. The compost filter sock is temporary in nature. Compost Filter Socks consist of a biodegradable or photodegradable mesh tube filled with a coarse compost filter media that meets certain performance criteria including hydraulic flow through rate and solids removal, turbidity reduction, nutrient removal, metals removal and motor oil removal efficiencies.

ROCK FILTER OUTLETS

Rock filter outlets shall be immediately provided at locations where silt sock has been undermined or topped and shall be maintained until the removal of the silt fence. Temporary Rock Filter Outlets shall be constructed as indicated on the detail sheet.

PUMPED WATER FILTER BAG

Pumped Water Filter bag shall be provided as shown on the plans. Pump intake shall be maintained a sufficient distance from the bottom to prevent sediment from entering the system. Pump flow rates are not to exceed 50% of maximum flow rate as indicated by the manufacturer. Monitor and evaluate entire pumping and filtering operation to assure that the bag continues to function properly. Replace the filter bag when it is 1/2 full of sediment or when the sediment has reduced the discharged flow rate to an impractical rate or as directed by the inspector on-site.

EROSION CONTROL BLANKETS

Erosion control blankets should be used on all slopes that are 3H:1V or steeper and where potential exists for sediment pollution to receiving surface waters. Erosion control blankets should be used for all seeded areas within 50 feet of a surface water, or 100 feet of a special protection water, regardless of slope. Erosion control blankets should be installed according to the manufacturer's recommendations.

CONCRETE WASHOUT

A concrete wash area will be provided to clean out concrete delivery trucks and equipment used in concrete work. The diameter of the circular area, bounded by 24" silt sock, will be approximately 12 ft.

GENERAL NOTES

The project developer anticipates commencement of construction activities immediately following the receipt of a Final Plan Approval for the site modifications described above.

The below listed activities are presented in the general order of proper, logical and anticipated occurrence. Deviations to the indicated order may be required at such time as conditions merit. Such deviations should only be undertaken if necessary and in such a manner that the integrity of the overall project E&S Control Plan is maintained. Non-emergency deviations from the approved plans shall be validated by the Berks County Conservation District office before any adjustments are made. In the event of emergency conditions where this is not possible, the Berks County Conservation District shall be notified at the earliest possible time

Permanent stabilization is defined as a minimum uniform perennial 70% vegetative cover or other permanent non-vegetative cover with a density sufficient to resist accelerated erosion. Cut and fill slopes shall be capable of resisting failure due to slumping, sliding, or other movements.

The developer must notify the Berks County Conservation District 72 hours before initiating any earthmoving activities.

A copy of this E&S Control report and plans must be posted at the construction site.

E&S controls must be constructed, stabilized and functional before site disturbance within the tributary areas of those controls.

Only limited disturbance will be permitted to provide access to (construct sediment traps, diversion swales, etc.) for grading and acquiring borrow to construct those controls.

All pumping of sediment laden water shall be through a pumped water filtration device, or equivalent sediment removal facility, over non-disturbed vegetated areas. Discharge points should be established to provide for maximum distance to active waterways.

Sediment must be removed from storm water inlet protection after each runoff event.

Stockpile heights must not exceed 35'. Stockpile slopes must be 2:1 or flatter.

Mulch with mulch control netting or erosion control blankets must be installed on all slopes greater than 3:1.

Hay or straw mulch must be applied at rates of at least 3.0 tons per acre.

Diversion channels, sedimentation basins, sediment traps, and stockpiles must be stabilized immediately.

Stormwater inlets, which do not discharge to sediment traps must be protected until the tributary areas are stabilized.

All excavation for utility line installation shall be limited to the amount that can be excavated, installed, backfilled, and stabilized within one working day. All excavated material shall be deposited on the upslope side of the trench.

At the end of each working day, any sediment tracked or conveyed onto a public roadway will be removed and redeposited onto the construction site. Removal can be completed through use of mechanical or hand tools, but must never be washed off the road by use of water.

Sediment removed from E&SPC controls & facilities shall be disposed of in landscaped areas outside of steep slopes, wetlands, floodplains or drainage swales and immediately stabilized, or placed in topsoil stockpiles.

Should unforeseen erosive conditions develop during construction, the contractor shall take action to remedy such conditions and to prevent damage to adjacent properties as a result of increased runoff and/or sediment displacement. Stockpiles of wood chips, hay bales, crushed stone and other mulches shall be held in readiness to deal immediately with emergency problems of erosion. The operator shall notify the Berks County Conservation District and/or the regional office of the Department.

Until the site has achieved final stabilization the owner and/or contractor shall properly implement, operate and maintain all the best management practices. Maintenance shall include inspections of all erosion and sedimentation control after each runoff event and on a weekly basis. All preventative and remedial maintenance work, including clean out, repair, replacement, regrading, reseeding, re-mulching, and re-netting, must be performed immediately. If the E&S BMPs fail to perform as expected, replacement BMPs, or modifications of those installed will be required. The inspector shall provide written documentation of inspection and repair /replacement of BMPs by the contractor.

Until the site has achieved final stabilization the owner and/or contractor shall properly implement, operate and maintain all the best management practices. Maintenance shall include inspections of all erosion and sedimentation control after each runoff event and on a weekly basis. All preventative and remedial maintenance work, including clean out, repair, replacement, regrading, reseeding, re-mulching, and re-netting, must be performed immediately. If the E&S BMPs fail to perform as expected, replacement BMPs, or modifications of those installed will be required.

Immediately after earth disturbance activities cease in any area or subarea of the project, the operator shall stabilize all disturbed areas. During non-germinating months, mulch or protective blanketing shall be applied as described on the plan. Areas not at finished grade, which will be reactivated within 1 year, may be stabilized in accordance with the temporary stabilization specifications. Those areas which will not be reactivated within 1 year shall be stabilized in accordance with the permanent stabilization specifications.

After final site stabilization has been achieved, temporary erosion and sedimentation controls must be removed. Areas disturbed during removal of the controls must be stabilized immediately.

The contractor is advised to become thoroughly familiar with the previsions of the Appendix 64, Erosion Control Rules and Regulations, Title 25, Part 1, Department of Environmental Protection, Subpart C, Protection of Natural Resources, Article III, Water Resources, Chapter 102, Erosion Control.

Failure to correctly install E&S BMP's, failure to prevent sediment-laden runoff from leaving the construction site, or failure to take immediate corrective action to resolve failure of E&S BMP's may result in administrative, civil, and/or criminal penalties being instituted by the Department as defined in Section 602 of the Pennsylvania Clean Streams Law. The Clean Streams Law provides for up to $10,000 per day in civil penalties, up to $10,000 in summary criminal penalties, and up to $25,000 in misdemeanor criminal penalties for each violation.

All fills shall be compacted as required to reduce erosion, slippage, settlement, subsidence or other related problems. Fill intended to support buildings, structures and conduits, etc. shall be compacted in accordance with local requirements or codes.

All earthen fills shall be placed in compacted layers not to exceed 9 inches in thickness.

Fill materials shall be free of frozen particles, brush, roots, sod, or other foreign or objectionable materials that would interfere with or prevent construction of satisfactory fills.

Frozen materials or soft, mucky, or highly compressible materials shall not be incorporated into fills.

Fill shall not be placed on saturated or frozen surfaces.

Seeps or springs encountered during construction shall be handled in accordance with the standard and specification for subsurface drain or other approved method.

All graded areas shall be permanently stabilized immediately upon reaching finished grade. Cut slopes in competent bedrock and rock fills need not be vegetated. Seeded areas within 50 feet of a surface water, or as otherwise shown on the plan drawings, shall be blanketed according to the standards of this plan.

E&S BMPs shall remain functional as such until all areas tributary to them are permanently stabilized or until they are replaced by another BMP approved by the local conservation district or the Department.

Upon completion of all earth disturbance activities and permanent stabilization of all disturbed areas, the owner and/or operator shall contact the local conservation district to schedule a final inspection prior to removal/conversion of the E&S BMPs.

After final site stabilization has been achieved, temporary erosion and sediment BMPs must be removed or converted to permanent post construction stormwater management BMPs. Areas disturbed during removal or conversion of the BMPs shall be stabilized immediately. In order to ensure rapid revegetation of disturbed areas, such removal/conversions are to be done only during the germinating season.

102.4(B)(5)(vii) A SEQUENCE OF BMP INSTALLATION AND REMOVAL IN RELATION TO THE SCHEDULE OF EARTH DISTURBANCE ACTIVITIES, PRIOR TO, DURING AND AFTER EARTH DISTURBANCE ACTIVITIES

CONSTRUCTION SEQUENCE

1. All earth disturbance activities shall proceed in accordance with the following sequence. Each stage shall be completed in compliance with Chapter 102 regulations before any following stage is initiated. Clearing and grubbing shall be limited only to those areas described in each stage.

2. At least 7 days before starting any earth disturbance activities, the operator shall invite all contractors involved in those activities, the landowner, all appropriate municipal officials, the E&S Control plan preparer, and a representative of the Berks County Conservation District to schedule an on-site pre-construction meeting. In addition, at least 3 days before starting any earth disturbance activities, all contractors involved in those activities shall notify the Pennsylvania One Call System Inc. at 1-800-242-1776 for buried utilities location.

3. Before implementing any revisions to the approved E&S Control Plan or revisions to other plans that may affect the effectiveness of the approved E&S Control Plan, the operator must receive approval of the revisions from the Berks County Conservation District.

4. The operator shall remove from the site, recycle or dispose of all building materials and waste in accordance with the Department's Solid Waste Management Regulations at 25 PA Code 260.1 et seq., 271.1 e. seq. and 287.1 et seq. No building materials or wastes or unused building materials shall be burned, buried, dumped, or discharged at the site.

5. Before disposing of soil or receiving borrow for the site, the operator must assure that each spoil or borrow area has an E&S Control plan approved by the Berks County Conservation District, and which is being implemented and maintained according to Chapter 102 regulations. The operator shall also notify the Berks County Conservation District in writing of all receiving spoil and borrow areas when they have been identified.

6. Mark, flag or stake the limits of disturbance (LOD) prior to any disturbance activities by means deemed acceptable by the Berks County Conservation District (i.e.i.e., survey stakes, posts, and rope, construction fence, etc.

NOTE: Disturbed areas which are not at finished grade and which will not be redisturbed within 4 days must be stabilized in accordance with temporary seeding specifications. Disturbed areas, which are either at finished grade or will not be redisturbed within 1 year, must be stabilized in accordance with permanent seeding specifications.

NOTE: As disturbed areas within a project approach final grade, preparations should be made for seeding and mulching to begin (i.e. anticipate the completion date and schedule the seeder). In no case should an area exceeding 15,000 square feet, which is to be stabilized by vegetation, reach final grade without being seeded and mulched. Waiting until earthmoving is completed before making preparation for seeding and mulching is not acceptable.

NOTE: For any step in this sequence that pertains to grading and achieving finished grade and the replacementthe replacement of topsoil, finished grade in ana lawn area shall be accomplished by replacement of topsoil, per the procedures specified in the Topsoil Application section of this narrative, to bring those areas to finished grade prior to permanent vegetative stabilization. The replacement of topsoil shall be at a depth that is equivalent to the predevelopment topsoil depth in that area unless this predevelopment depth is less than 6-inches. If predevelopment topsoil depth is less than 6-inches, replace topsoil at a minimum depth of 6-inches. Soil testing shall be performed to determine actual lime and fertilizer rates, which shall be used in lieu of the provided application rates.

7. The operator shall assure that the approved erosion and sediment control plan is properly and completely implemented.

8. The operator shall assure that an erosion and sediment control plan has been prepared by the applicant, submitted to and approved by the Berks Conservation District, and is being implemented and maintained for all soil and/or rock spoil and borrow areas, regardless of their locations.

9. Before initiating any revisions to the approved erosion and sediment control plan or revisions to other plans which may affect the effectiveness of the approved E&S control plan, the operator must receive approval of the revisions from the Berks County Conservation District.

10. ALL EARTH DISTURBANCE ACTIVITIES SHALL PROCEED IN ACCORDANCE WITH THE FOLLOWING SEQUENCE. EACH STAGE SHALL BE COMPLETED BEFORE ANY FOLLOWING STAGE IS INITIATED. CLEARING AND GRUBBING SHALL BE LIMITED ONLY TO THOSE AREAS DESCRIBED IN EACH STAGE.

11. Erosion and sediment BMPs must be constructed, stabilized and functional before site disturbance begins with the tributary areas of those BMPs.

12. Rock construction entrances shall be installed at the intersection of 4th Street and Oley Street, extending into the project site.

13. Install compost filter sock and construction protection fence as shown on the E&S Control Plan. Place construction fence along the perimeter of the infiltration BMPs.

14. Upon installation or stabilization of all perimeter sediment control BMPs and at least 3 days prior to proceeding with the bulk earth disturbance activities, the permittee or co-permittee shall provide notification to the department or the Berks County Conservation District.

16. Following installation and stabilization of E&S BMPs, clearing and grubbing of the site may begin.

17. Strip and stockpile topsoil and store in stockpile storage areas. Stockpile heights must not exceed 35'. Stockpile slopes must be 2:1 or flatter. Stripping of topsoil shall be kept to a minimum for those areas being graded at a given time. Immediately install compost filter sock around topsoil stockpiles as shown on the E&S control plan.

NOTE: Steps 18 - 21 can be completed simultaneously in conjunction with each other.

18. Initiate rough grading activities required to achieve the proposed grades as shown on the E&S Control Plans. Disturbance shall be limited only to that area being graded at a given time.

19. Install utilities including gas, water, sewer, electric, telephone, cable and others at this point, or any time after at owner/developer's discretion. Immediately install temporary seeding and CVA matting if specified on the E&S Control Plan and any other disturbed areas as designated on the plans. Building construction may begin at any point following this step.

The total length of excavated trench open at any one time should not be greater than the total length of pipe line that can be placed in the trench and backfilled in one working day. No open trench should exist when this section of utility installation ceases at the end of the workday. In non-paved areas, soil supplements, seed and mulch should be applied immediately after the utility is installed and backfilled. In paved areas, stone subbase shall be applied immediately after the utility has been installed and backfilled, paving can be completed any time after as required. Excavated materials shall be placed on the upslope side of the trench

If groundwater is encountered during utility installation, use a pumped water filter bag for removal and water quality.

20. Once all underground utilities have been installed, immediately install stone within access driveways and commence building construction. At the discretion of the developer/owner, installation of the asphalt base course may begin.

21. Install all proposed trees and shrubs and complete permanent vegetative stabilization of any and all remaining disturbed lawn areas which are at final grade in accordance with the Permanent Vegetative Surface Stabilization specifications in this narrative.

22. The Berks County Conservation District shall be contacted for a final site inspection prior to removal of E & S BMPs. Upon complete stabilization and vegetation of all previously disturbed areas with a uniform 70% perennial ground cover over the entire disturbed area and roadways / driveways areas should have at least a clean subbase in place, begin removal of temporary erosion control BMPs.

- Conversion should be restricted to the growing season.

23. Upon stabilization of all disturbed areas remove all other E& S BMPs and measures including compost filter sock, inlet protection, concrete washout, rock construction entrance, etc. An area shall be considered to have achieved final stabilization when it has a minimum of 70% uniform perennial vegetative cover or other permanent non-vegetative cover with a density sufficient to resist accelerated surface erosion and subsurface characteristics to resist sliding or other movements.

After final site stabilization has been achieved, temporary erosion and sedimentation controls must be removed. Areas disturbed during removal of controls must be stabilized immediately.

24. Contact the Berks County Conservation District to have a final inspection of the project in order to finalize construction and to verify the area of disturbance was per plan specifications.

TOPSOIL APPLICATION

Graded areas should be scarified or otherwise loosened to a depth of 6-inches to permit bonding of the topsoil to the surface areas and to provide a roughened surface to prevent topsoil from sliding down slope.

Topsoil should be uniformly distributed across the disturbed area to a depth of 6 inches minimum - 2 inches on fill out slopes. Spreading should be done in such a manner that sodding or seeding can proceed with a minimum of additional preparation or tillage. Irregularities in the surface resulting from topsoil placement should be corrected in order to prevent formation of depressions.

Topsoil should not be placed while the topsoil or subsoil is in a frozen or muddy condition, when the subsoil is excessively wet, or in a condition that may otherwise be detrimental to proper grading and seedbed preparation. Compacted soil should be scarified 6 to 12 inches along contour wherever possible prior to seeding.

GENERAL SEEDING AND SURFACE STABILIZATION CRITERIA

All disturbed areas that have not otherwise been stabilized and have significant potential for erosion should be stabilized with vegetation. This includes graded areas where it is anticipated that future earthmoving will take place within the coming year. Areas that will be subject to earthmoving within 12 months may be stabilized with temporary seed mixtures, predominantly annual grasses. All others should be stabilized with permanent seed mixes - predominantly perennial grasses. When final grade is achieved during non-germinating months, the area should be mulched until the beginning of the next planting season at the specified rates under "Stabilization During Non-Germination Periods". However, the area will not be considered stabilized until a minimum uniform 70% vegetative cover of erosion resistant perennial species has been achieved. **NOTE**: Areas that do not receive sufficient sunlight to support vegetation (e.g. under bridge decks) should be stabilized by some means other than vegetation.

As disturbed areas within a project approach final grade, preparations should be made for seeding and mulching to begin (i.e. anticipate the completion date and schedule the seeder). In no case should an area exceeding 15,000 square feet, which is to be stabilized by vegetation, reach final grade without being seeded and mulched. Waiting until earthmoving is completed before making preparations for seeding and mulching is not acceptable.

Before the seeding begins, topsoil should be applied and any required soil amendments worked into the soil to a depth of 4 to 6 inches. If compost is to be added to the topsoil, it should be worked into the soil with the other soil amendments unless it is being applied as an erosion control BMP.

Diversion channels, terraces, interceptor channels, channels of conveyance, sediment basins, sediment traps and stockpiles must be seeded and mulched immediately as specified under "Permanent Vegetative Surface Stabilization".

TEMPORARY VEGETATIVE SURFACE STABILIZATION

Upon temporary cessation of an earth disturbance activity or any stage or phase of an activity where a cessation of earth disturbance activities will exceed 4 days, the site shall be immediately seeded, mulched, or otherwise protected from accelerated erosion and sedimentation pending future earth disturbance activities.

For an earth disturbance activity or any stage or phase of an activity to be considered temporarily stabilized, the disturbed areas shall be covered with one of the following:

a. A minimum uniform coverage of mulch and seed, with a density capable of resisting accelerated erosion and sedimentation.

b. An acceptable BMP which temporarily minimizes accelerated erosion and sedimentation.

The following activities shall be undertaken to achieve temporary stabilization of all exposed and disturbed soil areas as required or directed.

1) Tilling - Upon suspension of grading activities in disturbed areas, surface soil shall be tilled and loosened. Tilling may be omitted if soil is sufficiently loose to permit seeding activities.

2) Lime Application - Ground limestone shall be applied to the loosened soil at a uniform rate of 46 pounds per 1000 square feet. This rate is in pounds of agricultural grade limestone per 1000 square feet. (1 ton/acre * 2000 lb/ton * 1 ac/43.56x10^3 sf = 46 pounds per 1000 square feet)

3) Fertilizer Application - 5-5-5 Fertilizer shall be applied to the loosened soil at a uniform rate of 5 pounds per 1000 square feet.

4) Temporary Seeding - the following seed mixture shall be applied to the prepared soil surface by broadcast spreaders or hydraulic application according to the following rates of application:

Temporary Seeding - Annual rye grass shall be applied at a rate of four pounds Pure Live Seed per 1,000 square feet.

After mechanical seeding, seed shall be covered by means of light raking to a depth of one-quarter inch of soil.

5) Hay or straw mulch shall be applied at a rate of 3 tons/acre.

Rule of thumb: If you are seeing a lot of bare ground, there is not enough straw.
(Caution: Too much straw can be as harmful as too little straw.)

Mulches should be applied at the rates shown in Table 11.6

Straw and hay mulch should be anchored or tackified immediately after application to prevent being windblown. A tractor-drawn implement may be used to "crimp" the straw or hay into the soil -- about 3 inches. This method should be limited to slopes no steeper than 3H:1V. The machinery should be operated on the contour. Note: Crimping of hay or straw by running over it with tracked machinery is not recommended.

Polymeric and gum tackifiers mixed and applied according to manufacturer's recommendations may be used to tack mulch. Avoid application during rain and on windy days. A 24-hour curing period and a soil temperature higher than 45F are typically required. Application should generally be heaviest at edges of seeded areas and at crests of ridges and banks to prevent loss by wind. The remainder of the area should have binder applied uniformly. Binders may be applied after mulch is spread or sprayed into the mulch as it is being blown onto the soil. Applying straw and binder together is generally more effective.

Synthetic binders, or chemical binders, may be used as recommended by the manufacturer to anchor mulch provided sufficient documentation is provided to show they are non-toxic to native plant and animal species.

Mulch on slopes of 8% or steeper should be held in place with netting. Lightweight plastic, fiber, or paper nets may be stapled over the mulch according to manufacturer's recommendations.

Shredded paper hydromulch should not be used on slopes steeper than 5%. Wood fiber hydromulch may be applied on steeper slopes provided a tackifier is used. The application rate for any hydromulch should be 2,000 lb/acre at a minimum.

STABILIZATION DURING NON-GERMINATION PERIODS

During non-germination periods, mulch must be applied to disturbed areas at a rate of 3 tons/acre. The non-germination period shall be determined based on current weather conditions; it is generally the period from October 15 to March 15. Areas mulched during non-germination periods must be limed, fertilized, seeded and mulched immediately.

PERMANENT VEGETATIVE SURFACE STABILIZATION

1) Tilling - Upon completion of finished grading activities, surface soil shall be tilled and loosened. Tilling may be omitted if soil is sufficiently loosened following the final grading activities.

2) Lime Application - Ground limestone shall be applied to the loosened soil at a uniform rate of 184 pounds per 1000 square feet. This rate is in pounds of agricultural grade limestone per 1000 square feet.

3) Base Fertilizer Application - Fertilizer shall be applied to the soil at the rate established by the soil testing, as required to accommodate proper growth of the seed mixture.

The following base fertilizer application rate shall be employed:

As a minimum, 10 - 20 - 20 Fertilizer shall be applied at a uniform rate of 25 pounds per 1,000 square feet.

4) Mixing - Ground limestone and fertilizer shall be mixed with the soil to a depth of four inches through use of suitable equipment.

5) Seeding - Seed mixture shall be applied to the prepared soil surface by broadcast spreaders or hydraulic application according to the following rates of application:

Permanent Seeding - A mixture of Kentucky 31 Tall Fescue - 47%, Creeping Red Fescue - 50%, and Redtop - 3% shall be applied at a rate of two to three pounds per 1,000 square feet.

After seeding, seed shall be covered by means of light raking to a depth of one-quarter inch of soil.

6) Hay or straw mulch shall be applied at a rate of 3 tons/acre.

Rule of thumb: If you are seeing a lot of bare ground, there is not enough straw.
(Caution: Too much straw can be as harmful as too little straw.)

Mulches should be applied at the rates shown in Table 11.6

Straw and hay mulch should be anchored or tackified immediately after application to prevent being windblown. A tractor-drawn implement may be used to "crimp" the straw or hay into the soil -- about 3 inches. This method should be limited to slopes no steeper than 3H:1V. The machinery should be operated on the contour. Note: Crimping of hay or straw by running over it with tracked machinery is not recommended.

Polymeric and gum tackifiers mixed and applied according to manufacturer's recommendations may be used to tack mulch. Avoid application during rain and on windy days. A 24-hour curing period and a soil temperature higher than 45F are typically required. Application should generally be heaviest at edges of seeded areas and at crests of ridges and banks to prevent loss by wind. The remainder of the area should have binder applied uniformly. Binders may be applied after mulch is spread or sprayed into the mulch as it is being blown onto the soil. Applying straw and binder together is generally more effective.

Synthetic binders, or chemical binders, may be used as recommended by the manufacturer to anchor mulch provided sufficient documentation is provided to show they are non-toxic to native plant and animal species.

Mulch on slopes of 8% or steeper should be held in place with netting. Lightweight plastic, fiber, or paper nets may be stapled over the mulch according to manufacturer's recommendations.

Shredded paper hydromulch should not be used on slopes steeper than 5%. Wood fiber hydromulch may be applied on steeper slopes provided a tackifier is used. The application rate for any hydromulch should be 2,000 lb/acre at a minimum.

102.4(b)(5)(x) A MAINTENANCE PROGRAM WHICH PROVIDES FOR INSPECTION OF BMPs ON A WEEKLY BASIS AND AFTER EACH MEASURABLE RAINFALL EVENT, INCLUDING THE REPAIR OF THE BMPs TO ENSURE EFFECTIVE AND EFFICIENT OPERATION

1. Until the site is stabilized, the owner and/or contractor shall properly implement, operate and maintain all erosion and the best management practices (BMP's). Maintenance shall include inspections of all erosion and sedimentation BMP's after each runoff event and on a weekly basis. All site inspections will be documented in an inspection log kept for this purpose. The compliance actions and the date, time, and name of the person conducting the inspection. The inspection log will be kept on site at all times and made available to the District upon request.

2. All preventative and remedial maintenance work, including clean out, repair, replacement, regrading, reseeding, re-mulching, and re-netting, must be performed immediately. If erosion and sedimentation BMP's fail to perform as expected, replacement BMP's or modifications of those installed will be needed.

3. Where BMP's are found to fail to alleviate erosion or sediment pollution, the permittee or co-permittee shall include the following information:

a. The location and severity of the BMP's failure and any pollution events.
b. All steps taken to, reduce, eliminate and prevent the recurrence of the non-compliance.
c. The time frame to correct the non-compliance, including the exact dates when the activity will return to compliance.

4. Upon completion of an earth disturbance activity or any stage or phase of an activity, the operator shall stabilize immediately the disturbed areas to protect from accelerated erosion. During non-germinating periods, mulch must be applied at the specified rates. Disturbed areas which are not at finished grade and which will not be redisturbed within 4 days must be stabilized in accordance with temporary seeding specifications. Disturbed areas, which are either at finished grade or will not be redisturbed within 1 year, must be stabilized in accordance with permanent seeding specifications.

5. Should unforeseen erosive conditions develop during construction, the contractor shall take action to remedy such conditions and to prevent damage to adjacent properties as a result of increased runoff and/or sediment displacement. Stockpiles of wood chips, hay bales, crushed stone and other mulches shall be held in readiness to deal immediately with erosion emergencies.

6. Sediment shall be removed from sediment traps when sediment level reaches the elevation indicated on the plan detail.

7. Sediment must be removed from inlet protection after each runoff event, or when the distance between the grate and the sediment level is reduced to 18".

8. The sediment trapped behind the compost filter sock must be removed at the proper time in order for the barriers to be effective. They will be cleaned when the sediment level reaches one-half the height of the sock.

9. At the end of each working day, any and all sediment tracked onto, or conveyed by other means, onto a public roadway, will be removed and redeposited onto the construction site. Removal can be completed though use of either machinery or by hand tools, but under no circumstances shall be washed off the road by use of water.

10. Seeded area will be restored, reseeded and mulched immediately should any damage or disturbance occur. The temporary control facilities shall be properly maintained until final stabilization of the construction area is complete.

11. Sediment removed from E&S Control measures/facilities shall be disposed of in landscaped areas outside of steep slopes, wetlands, floodplains and drainage swales and immediately stabilized or placed in topsoil stockpiles. An E&S Control Plan shall be submitted to the local Conservation District for all off-site spoil areas.

12. All sediment shall be redeposited onto the construction site and immediately stabilized with permanent vegetative surface stabilization. If the material is to be hauled off site it shall be disposed of in accordance with all PADEP regulations including but not limited Chapter 102 and the standards for solid waste management. All recycling and disposal of construction wastes shall be in accordance with PADEP solid waste management regulations.

13. The operator shall remove from the site, recycle or dispose of all building materials and wastes in accordance with PADEP's Solid Waste Management Regulations at 25 PA Code 260.1 et seq., 271.1.e. seq. and 287.1 et seq.

14. All channels must be kept free of obstructions such as fill ground, fallen leaves & woody debris, accumulated sediment, and construction materials/wastes. Channels should be kept mowed and/or free of all weedy, brushy or woody growth. Any underground utilities running across/ through the channel(s) shall be immediately backfilled and the channel(s) repaired and stabilized per the channel cross-section detail.

15. Stormwater inlets, which do not discharge to sediment traps or basins, must be protected until the tributary areas are stabilized.

16. Control Measures and facilities, both temporary and permanent will be maintained during the progress of the work. This will be done by implementing a program of proper disposal of materials and frequent removal of solid materials from the control facilities. The contractor will inform all construction site workers about the major provisions of the E&S Control Plan.

102.4(b)(5)(xi) PROCEDURES WHICH ENSURE THAT THE PROPER MEASURES FOR THE RECYCLING OR DISPOSAL OF MATERIALS ASSOCIATED WITH OR FROM THE PROJECT SITE WILL BE UNDERTAKEN IN ACCORDANCE WITH DEPARTMENT REGULATIONS

Individuals responsible for earth disturbance activities must ensure that proper mechanisms are in place to control waste materials. Construction wastes include, but are not limited to, excess soil materials, building materials, concrete wash water, sanitary wastes, etc. that could adversely impact water quality. Measures should be planned and implemented for housekeeping, materials management, and litter control. Wherever possible, recycling of excess materials is preferred, rather than disposal.

Before disposing of soil or receiving borrow for the site, the operator must assure that each spoil or borrow area has an erosion and sediment control plan approved by the local county conservation district, and which is being implemented and maintained according to DEP Chapter 102 regulations. All recycling or disposal of materials shall be also in accordance with DEP Chapter 102 regulations.

NOTATION REGARDING CLEAN FILL AND ENVIRONMENTAL DUE DILIGENCE

If the site will need to import or export material from the site, the responsibility for performing environmental due diligence and determination of clean fill will rest with (Responsible Party).

Clean Fill is defined as: Uncontaminated, non-water soluble, non-decomposable, inert, solid material. The term includes soil, rock, stone, dredged material, used asphalt, and brick, block or concrete from construction and demolition activities that is separate from other waste and is recognizable as such. The term does not include materials placed in or on the waters of the Commonwealth unless otherwise authorized. (The term "used asphalt" does not include milled asphalt or asphalt that has been processed for re-use). Clean Fill affected by a spill or release of a regulated substance: Fill materials affected by a spill or release of a regulated substance still qualifies as clean fill provided the testing reveals that the fill material contains concentrations of regulated substances that are below the residential limits in Tables FP-1a and FP-1b found in the Department's policy "Management of Fill". Any person placing clean fill that has been affected by a spill or release of a regulated substance must use form FP-001 to certify the origin of the fill material and the results of the analytical testing to qualify the material as clean fill. Form FP-001 must be retained by the owner of the property receiving the fill. A copy of Form FP-001 can be found at the end of these instructions. Environmental due diligence: The applicant must perform environmental due diligence to determine if the fill materials associated with the project qualify as clean fill.

Environmental due diligence is Defined as: Investigative techniques, including, but not limited to, visual property inspections, electronic data base searches, review of property ownership, review of property use history, Sanborn maps, environmental questionnaires, transaction screens, analytical testing, environmental assessments or audits. Analytical testing is not a required part of due diligence unless visual inspection and/or review of the past land use of the property indicates that the fill may have been subjected to a spill or release of regulated substance. If the fill may have been affected by a spill or release of a regulated substance, it must be tested to determine if it qualifies as clean fill. Testing should be performed in accordance with Appendix A of the Department's policy "Management of Fill". Fill material that does not qualify as clean fill is regulated fill. Regulated fill is waste and must be managed in accordance with the Department's municipal or residual waste regulations based on 25 Pa. Code Chapters 287 Residual Waste Management or 271 Municipal Waste Management, whichever is applicable. These regulations are available on-line at www.pacode.com .

102.4(b)(5)(xii) GEOLOGIC FORMATION/SOIL CONDITIONS THAT MAY HAVE POTENTIAL TO CAUSE POLLUTION

There is minimal potential for geologic or soil conditions to cause pollution during construction. Major components of the underlying geology are sandstone and shale. Limestone is a minor component. If sinkholes or depressions form, the developer will contact a Professional Geologist or hydrogeologist for recommendations on site mitigation.

Existing waste (i.e. asphalt and concrete) will be disposed in accordance with PaDEP's Solid Waste Management Regulation at 25 PA Code 260.1 et. Seq.; 271.1 et, seq.; and 287.1 et, seq,

102.4(b)(5)(xiii) POTENTIAL THERMAL IMPACTS TO SURFACE WATER

During construction, thermal impacts will be addressed primarily though the use of compost filter sock and temporary vegetative stabilization. Additionally, Stormwater discharges, in both existing and proposed conditions, to a grass swale running through a heavily shaded to the Schuylkill River.

E&S MINIMIZES EARTH DISTURBANCE DURATION & SOIL COMPACTION

The extent and duration of earth disturbance is minimized through the construction sequence by specifying the amount of area that can be disturbed at one time, specifying the immediate placement of stabilization, and by staging the project.

ISSUED FOR BID JULY 19, 2023
NOT FOR CONSTRUCTION

Revision	Date	Description	Rev.By
1	8/9/23	Addendum 1	AMK

This document and all information and work product represented by and contained herein, is the sole and exclusive property of McCarthy Engineering Associates, Inc. The information contained herein is licensed only for limited use by the intended recipient, and no license, permission or authority is extended, directly or implied, to any party without the express written permission of McCarthy Engineering Associates, Inc. Copyright, 2021, McCarthy Engineering Associates, Inc. All rights reserved

McCARTHY ENGINEERING ASSOCIATES, INC.
555 Van Reed Road, Suite 2, Wyomissing, PA 19610
www.McCarthy-Engineering.com Phone: 610.373.8001
2500 East High Street, Suite 630, Pottstown, PA 19464

SEAL: COMMONWEALTH OF PENNSYLVANIA REGISTERED PROFESSIONAL JAMES C. McCARTHY ENGINEER PE-051494E

ISSUED FOR BID
E&S CONTROL NOTES
" PUBLIC WORKS FACILITY "

Client: WYOMISSING BOROUGH
Location: WYOMISSING BOROUGH, BERKS COUNTY, PENNSYLVANIA
Date: JULY 19, 2023

DRAWN BY:	PROJ. MANAGER:
AMK	JCM
PRINCIPAL:	SCALE:
JCM	NOT TO SCALE

SHEET NO. C7.2

PLAN NO. 230004-08- ESN-09

Plot Date: 8/9/2023 1:07 PM P:\04_Wyomissing\2023\08-Public Works Descope\Design\CADD Files\P-E&S.dwg

ONECALL NOTES:

Pennsylvania811

PENNSYLVANIA ACT 287, AS AMENDED BY ACT 121 REQUIRES NOTIFICATION OF EXCAVATORS, DESIGNERS, OR ANY PERSON PREPARING TO DISTURB THE EARTH'S SURFACE ANYWHERE IN THE COMMONWEALTH.

ACT 287 UNDERGROUND UTILITY PROTECTION ACT, AS AMENDED BY ACT 121

McCARTHY ENGINEERING ASSOCIATES, INC. HEREBY STATES THAT, PURSUANT TO THE PROVISIONS OF ACT NO. 121 OF OCTOBER 2008, OF THE PENNSYLVANIA LEGISLATURE, IT HAS PERFORMED THE FOLLOWING IN PREPARING THESE DRAWINGS REQUIRING EXCAVATION OR DEMOLITION WORK AT SITES WITHIN THE POLITICAL SUBDIVISION(S) SHOWN ON THE DRAWINGS:

1. PURSUANT TO SECTION 4, CLAUSE (2) OF SAID ACT, McCARTHY ENGINEERING ASSOCIATES, INC. REQUESTED FROM EACH USER'S OFFICE DESIGNATED ON SUCH LIST PROVIDED BY THE ONE CALL SYSTEM NOTIFICATION, THE INFORMATION PRESCRIBED BY SECTION 4, CLAUSE (2) OF SAID ACT, NOT LESS THAN (10) NOR MORE THAN (90) WORKING DAYS BEFORE FINAL DESIGN TO BE COMPLETED.
2. PURSUANT TO SECTION 4, CLAUSE (5) OF SAID ACT, McCARTHY ENGINEERING ASSOCIATES, INC. HAS MET THEIR OBLIGATIONS OF CLAUSE (2) BY CALLING THE ONE CALL SYSTEM SERVING THE LOCATION WHERE EXCAVATION IS TO BE PERFORMED.
3. PURSUANT TO SECTION 4, CLAUSE (3) OF SAID ACT, McCARTHY ENGINEERING ASSOCIATES, INC. HAS SHOWN UPON THESE DRAWINGS THE POSITION AND TYPE OF EACH LINE, AS DERIVED PURSUANT TO THE REQUEST MADE AS REQUIRED BY CLAUSE (2), THE SERIAL NUMBER PROVIDED BY THE ONE CALL SYSTEM, THE TOLL-FREE ONE CALL SYSTEM PHONE NUMBER, AND THE NAME OF THE USER, THE USER'S DESIGNATED OFFICE ADDRESS AND PHONE NUMBER AS SHOWN ON THE LIST REFERRED TO IN SECTION 4, CLAUSE (5) OF SAID ACT.

AND McCARTHY ENGINEERING ASSOCIATES, INC. DOES NOT MAKE ANY REPRESENTATION, WARRANTY, ASSURANCE OR GUARANTEE THAT THE INFORMATION RECEIVED PURSUANT TO SAID REQUEST AND AS REFLECTED ON THESE DRAWINGS IS CORRECT OR ACCURATE, BUT McCARTHY ENGINEERING ASSOCIATES, INC., IS REFLECTING SAID INFORMATION ON THESE DRAWINGS ONLY DUE TO THE REQUIREMENTS OF THE SAID ACT NO. 121 OF OCTOBER 2008.

ONE CALL SYSTEM SERIAL NO. NOTIFICATION BY McCARTHY ENGINEERING ASSOCIATES, INC..

DATE: JUNE 23, 2021

ONE CALL SYSTEM SERIAL NUMBER: 20211730550

UNDERGROUND UTILITY USERS:

UNDERGROUND UTILITY LOCATIONS ARE APPROXIMATE AND WERE DETERMINED FROM VISIBLE LOCATION, ACT 287, AS AMENDED BY ACT 121, UTILITY RESPONSES AND/OR BEST AVAILABLE PLAN INFORMATION.

McCARTHY ENGINEERING ASSOCIATES, INC. CANNOT GUARANTEE THE EXACT LOCATION OF ANY UNDERGROUND UTILITIES OR STRUCTURES. AN EXACT LOCATION CAN ONLY BE OBTAINED BY SUBSURFACE EXPLORATION, WHICH IS NOT A PART OF THIS CONTRACT PERFORMANCE.

PA ONE CALL SYSTEM INFORMATION:

PENNSYLVANIA ACT 287, AS AMENDED BY ACT 121, REQUIRES THREE (3) WORKING DAYS NOTICE FOR CONSTRUCTION PHASE AND FIVE (5) WORKING DAYS NOTICE IN DESIGN STAGE.

PA ONE CALL PHONE NUMBER: 1-800-242-1776

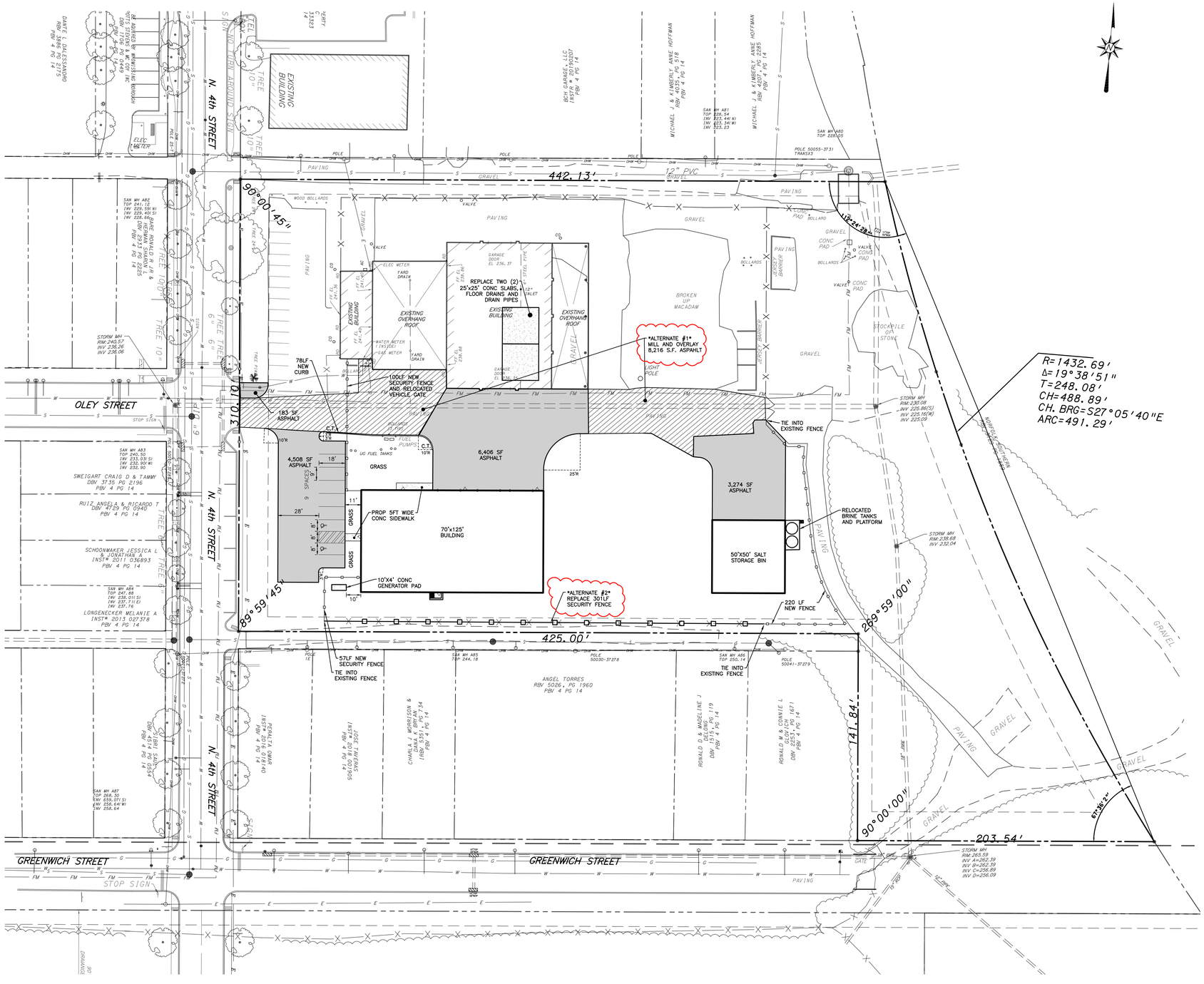

LEGEND:

- S — EXISTING SANITARY SEWER & MANHOLE
- S — EXISTING STORM SEWER & CATCH BASIN
- W — EXISTING WATER LINE & VALVE
- EXISTING FIRE HYDRANT
- G — EXISTING GAS LINE & VALVE
- T — EXISTING TELEPHONE
- E — EXISTING ELECTRIC
- OHW — EXISTING OVERHEAD WIRE
- EXISTING LIGHTING FEATURES
- EXISTING UTILITY POLE
- DC — EXISTING CURB AND DEPRESSED CURB
- EXISTING SIGNS
- EXISTING FENCE
- EXISTING TREE LINE
- PROPOSED FENCE
- PROPOSED PAVED AREA
- PROPOSED CONCRETE AREA
- PROPOSED PAVED AREA (ALTERNATE #1)
- PROPOSED FENCE (ALTERNATE #2)

GRAPHIC SCALE 1" = 30'

ISSUED FOR BID JULY 19, 2023
NOT FOR CONSTRUCTION

Revision	Date	Description	Rev.By
1	8/9/23	Addendum 1	AMK

This document, and all information and work products represented by and contained therein, is the sole and exclusive property of McCarthy Engineering Associates, Inc. and is not to be used for any purpose other than that for which it is intended. The intended recipient shall not transfer, duplicate or authorize to others the use of this document without the written permission of McCarthy Engineering Associates, Inc. Any unauthorized use, duplication or distribution of this document, or any portion thereof, shall be illegal, void and subject to civil and criminal penalties. Copyright © 2021 McCarthy Engineering Associates, Inc. All rights reserved.

McCARTHY ENGINEERING ASSOCIATES, INC.
555 Von Reed Road Suite 2 Wyomissing, PA 19610
2500 East High Street Suite 630 Pottstown, PA 19464
www.McCarthy-Engineering.com Phone: 610.374.8001

SEAL: REGISTERED PROFESSIONAL — JAMES C. McCARTHY — ENGINEER — PE-051484E

ISSUED FOR BID
ALTERNATE BIDS
" PUBLIC WORKS FACILITY "

Client: WYOMISSING BOROUGH
Location: WYOMISSING BOROUGH, BERKS COUNTY, PENNSYLVANIA
Date: JULY 19, 2023

DRAWN BY:	PROJ. MANAGER:
AMK	JCM
PRINCIPAL:	SCALE:
JCM	1"=30'

SHEET NO. C8.0

PLAN NO. 230004-08- ALT-10

Plot Date: 8/9/2023 11:47 AM P:\04_Wyomissing\2023\08-Public Works Dessoper\Design\CADD Files\P-Site.dwg

Renovations and New Building for

Public Works Facility

Borough of Wyomissing, Department of Public Works
4th & Oley Street, Wyomissing, Berks County, PA 19610

DESIGN TEAM

ARCHITECT:

Olsen Design Group Architects

2345 Bernville Road
Reading, PA 19605
610-371-9606 (FAX) 610-371-9607

SITE / STRUCTURAL/MEP FP ENGINEER:

McCarthy Engineering Assoc.

1121 Snyder Road
West Lawn, PA 19609
610-373-8001 (FAX) 610-373-8077

SITE LOCATION PLAN

CONTACT PERSON(s)

Lee C. Olsen, AIA, NCARB, Principal - In - Charge

Olsen Design Group Architects
2345 Bernville Road
Reading, Pennsylvania 19605

PHONE : 610 - 371 - 9606
FAX : 610 - 371 - 9607
E-Mail: lolsen@odgarchitects.com

ISSUE DATES

90% REVIEW BY OWNER :
FINAL REVIEW BY OWNER :
ISSUED FOR BIDDING : 7/19/23
ISSUED FOR ACCESSIBILITY PLAN REVIEW :
ISSUED FOR CODE REVIEW :
ISSUED FOR PERMITS :
ISSUED FOR CONSTRUCTION :

ABBREVIATIONS

A	
@	AT
&	AND
A.B.	ANCHOR BOLT
A.F.F.	ABOVE FINISHED FLOOR
A.I.B.	AIR INFILTRATION BARRIER
ALUM.	ALUMINUM
ANOD.	ANODIZE
APPROX.	APPROXIMATE
APVD.	APPROVED
A.T.C.	ACOUSTIC TILE CEILING
B	
BITUM.	BITUMINOUS
BLDG.	BUILDING
BLKG.	BLOCKING
BM.	BEAM
B.M.	BENCH MARK
B.O.	BOTTOM OF
C	
CAB.	CABINET
C.B.	CATCH BASIN
C.D.	CEILING DIFFUSER
CEM.	CEMENT
C. FLSHG.	COUNTER FLASHING
C.G.	CORNER GUARD
C.H.	CEILING HEIGHT
C.J.	CONTROL JOINT
C.L.	CENTER LINE
CLG.	CEILING
CLR.	CLEAR
COL.	COLUMN
CPT.	CARPET
CONC.	CONCRETE
CONT.	CONTINUOUS
CRNR.	CORNER
C.T.	CERAMIC TILE
C.W.	CURTAIN WALL
D	
D.	DEPTH
DBL.	DOUBLE
DET.	DETAIL
DIA.	DIAMETER
DIM.	DIMENSION
DIV.	DIVISION
DR.	DOOR
DWG.	DRAWING
E	
E.C.	ELECTRICAL CONTRACTOR
E. FLSH	ELASTOMERIC FLASHING
E.J.	EXPANSION JOINT
EL.	ELEVATION
ELEC.	ELECTRIC
EQ.	EQUAL
EQUIP.	EQUIPMENT
E.S.	EXPOSED STRUCTURE
E.W.	EACH WAY
E.W.C.	ELECTRIC WATER COOLER
EXH.	EXHAUST
EXIST.	EXISTING
EXT.	EXTERIOR
F	
F.A.	FIRE ALARM
F.D.	FLOOR DRAIN
F.E.	FIRE EXTINGUISHER
F.F.	FINISHED FLOOR
F.H.C.	FIRE HOSE CABINET
FIN.	FINISH
FLSH.	FLASHING
F.O.	FACE OF
FT.	FOOT
G	
GALV.	GALVANIZED
G.C.	GENERAL CONTRACTOR
GL.	GLASS
GLZD.	GLAZED
GRD.	GROUND
G.W.B.	GYPSUM WALL BOARD
H	
H.	HIGH
HDW.	HARDWARE
H.M.	HOLLOW METAL
HORIZ.	HORIZONTAL
H.P.	HIGH POINT
HT.	HEIGHT
I	
I.D.	INSIDE DIAMETER
I.M.P.	INSULATED METAL PANEL
ILLUM.	ILLUMINATED
INCAND.	INCANDESCENT
INFO.	INFORMATION
INSUL.	INSULATED
INT.	INTERIOR
J	
JT.	JOINT
L	
LAM.	LAMINATE
LBL.	LABEL
LNTL.	LINTEL
L.P.	LOW POINT
LTG.	
M	
MAS.	MASONRY
MAX.	MAXIMUM
MECH.	MECHANICAL
M.G.S.	METAL GRAVEL STOP
MH.	MANHOLE
MIN.	MINIMUM
MISC.	MISCELLANEOUS
MTD.	MOUNTED
MTL.	METAL
N	
N.	NORTH
N.I.C.	NOT IN CONTRACT
NO.	NUMBER
N.T.S.	NOT TO SCALE
O	
O.C.	ON CENTER
O.D.	OUTSIDE DIAMETER
O.H.	OPPOSITE HAND
OPP.	OPPOSITE
OPNG.	OPENING
P	
P.I.P.	POURED IN PLACE
P. LAM.	PLASTIC LAMINATE
PLUMB.	PLUMBING
PNL.	PANEL
PR.	PAIR
PRCST.	PRECAST
PROJ.	PROJECT
P.T.	PRESSURE TREATED
PTD.	PAINTED
Q	
Q.C.	QUALITY CONTROL
QTY.	QUANTITY
R	
R.	RISER
RAD.	RADIUS
R.C.P.	REFLECTED CEILING PLAN
RCPT.	RECEPTACLE
R.D.	ROOF DRAIN
REF.	REFERENCE
REINF.	REINFORCE
REM.	REMOVABLE
REQ.	REQUIRE
RESIL.	RESILIENT
REV.	REVISION
RFG.	ROOFING
R.O.	ROUGH OPENING
R.W.C.	RAIN WATER CONDUCTOR
S	
S.	SOUTH
SCHED.	SCHEDULE
S.F.	SQUARE FOOT
S.H.	SOFFIT HEIGHT
SIM.	SIMILAR
SPECS.	SPECIFICATIONS
SQ.	SQUARE
S.S.	STAINLESS STEEL
STL.	STEEL
S.V.T.	SOLID VINYL TILE
STN.	STONE
STOR.	STORAGE
STRUCT.	STRUCTURE
S.W.C.	SHEET WALL COVERING
T	
TEL.	TELEPHONE
TEMP.	TEMPORARY
T.O.S.	TOP OF STEEL
TYP.	TYPICAL
U	
U.O.N.	UNLESS OTHERWISE NOTED
V	
V.B.	VAPOR BARRIER
V.C.T.	VINYL COMPOSITION TILE
VERT.	VERTICAL
VEST.	VESTIBULE
VIN.	VINYL
V.I.F.	VERIFY IN FIELD
W	
W.	WIDE or WEST
W. BLKG.	WOOD BLOCKING
WD.	WOOD
WK.	WORK
W/	WITH
W/O	WITHOUT
W.O.	WINDOW OPENING
WP.	WATERPROOF
W.R.	WATER RESISTANT
WTHP.	WEATHERPROOF

EXISTING BUILDING CODE REVIEW

REFERENCE CODE:

2018 INTERNATIONAL EXISTING BUILDING CODE, 2018 PA UCC
2018 INTERNATIONAL BUILDING CODE, CHAPTER 11, ACCESSIBILITY

☐ NEW CONSTRUCTION ■ RENOVATIONS TO EXISTING BUILDING ☐ ADDITION(S) ☐ ALTERATION(S)

PROPOSED USE: BUSINESS GROUP B / STORAGE GROUP S-1

BUILDING DATA:

CONSTRUCTION TYPE: II - B

BUILDING HEIGHT AND AREA

MAX. HEIGHT: 55' / (2) STORIES (TABLE 504.3 & TABLE 504.4)
MAX. AREA: S-1 = 17,500 (NS) (TABLE 506.2)
ALLOWABLE INCREASE: 30,625 (SECTION 506.3.3)

AREA SUMMARY:

NUMBER OF STORIES / SQ. FT : (1) ONE / 8,780

FLOOR	OVERALL FLOOR SQ. FT.	PROJECT SQ. FT.	PERCENT (%) OF FLOOR AFFECTED
MAIN LEVEL OFFICE	8,780 SQ. FT.	1,080 SQ. FT.	12%
MAIN LEVEL GARAGE	NO WORK	NO WORK	NO WORK

OCCUPANCY DATA:

MAIN LEVEL OFFICE (BUSINESS) 1080 x 150 = 8
GARAGE - NO WORK/NO CHANGE
8 OCCUPANTS

REQUIRED EGRESS:

MAIN LEVEL:
8 OCCUPANTS (0.2 INCHES) = 32" REQ'D / 34" PROVIDED

FIRE RESISTANCE RATING (HOURS) — CONSTRUCTION TYPE: II - B

BUILDING ELEMENT	RATING	REFERENCE CODE SECTION/EXCEPTIONS	FIRE SEPARATION DISTANCE (FEET)
STRUCTURAL FRAME, COLUMNS, GIRDERS, & TRUSSES	0	TABLE 601	--
BEARING WALLS			
EXTERIOR	0	TABLE 601	--
INTERIOR	0	TABLE 601	--
NONBEARING WALLS & PARTITIONS			
EXTERIOR	0	TABLE 602	X >/= 30'
INTERIOR	0	TABLE 601	--
FLR. CONST. SUPPORT BEAMS, & JOISTS	0	TABLE 601	--
ROOF CONST. SUPPORT BEAMS, & JOISTS	0	TABLE 601	--
SHAFT - EXIST	N/A	--	--
SHAFT - OTHER	N/A	SECTION 713.4	--
CORRIDOR SEPARATION	0	TABLE 1020.1	CORRIDOR LOAD LESS THAN 30
OCCUPANCY GROUP SEPARATION	0	TABLE 508.4	w/ SPRINKLERS
PARTY / FIREWALL SEPARATION	N/A	--	--
SMOKE BARRIER SEPARATION	1	SECTION 709.3	--
TENANT SEPARATION	N/A	--	--

LIFE SAFETY SYSTEM REQUIREMENTS:

SPRINKLERS:	■ NO	☐ YES	☐ HAS BEEN PROVIDED	SECTION 903.1
PORTABLE FIRE EXTINGUISHERS	☐ NO	■ YES	■ HAS BEEN PROVIDED	SECTION 906.1
FIRE ALARM:	☐ NO	■ YES	■ HAS BEEN PROVIDED	SECTION 907.2.1
SMOKE DETECTION SYSTEM:	☐ NO	■ YES	■ HAS BEEN PROVIDED	SECTION 907.2.8.2
EMERGENCY LIGHTING:	☐ NO	■ YES	■ HAS BEEN PROVIDED	SECTION 1008.1
AREA OF REFUGE:	■ NO	☐ YES	☐ HAS BEEN PROVIDED	
PANIC HARDWARE:	☐ NO	■ YES	■ HAS BEEN PROVIDED	SECTION 1010.1.10

NEW BUILDING CODE REVIEW

REFERENCE CODE:

2018 INTERNATIONAL BUILDING CODE, 2018 PA UCC
2018 INTERNATIONAL BUILDING CODE, CHAPTER 11, ACCESSIBILITY

■ NEW CONSTRUCTION ☐ RENOVATIONS TO EXISTING BUILDING ☐ ADDITION(S) ☐ ALTERATION(S)

PROPOSED USE: BUSINESS GROUP B / STORAGE GROUP S-1

BUILDING DATA:

CONSTRUCTION TYPE: II - B

BUILDING HEIGHT AND AREA

MAX. HEIGHT: 75' / (3) STORIES (TABLE 504.3 & TABLE 504.4)
MAX. AREA: B = 23,000 (NS) / S-1 = 52,000 (SM) (TABLE 506.2)
ALLOWABLE INCREASE: N/A

AREA SUMMARY:

NUMBER OF STORIES/SQ. FT : 1 / 8,750

FLOOR	OVERALL FLOOR SQ. FT.	PROJECT SQ. FT.	PERCENT (%) OF FLOOR AFFECTED
MAIN LEVEL	8,750 SQ. FT.	8,750 SQ. FT.	100%
MEZZANINE LEVEL	3,000 SQ. FT.	3,000 SQ. FT.	100%

OCCUPANCY DATA:

MAIN LEVEL OFFICE (BUSINESS) 3,500 x 150 = 24
GARAGE & WASH BAY (S-1) 5,250 x 300 = 18
42 OCCUPANTS

REQUIRED EGRESS:

MAIN LEVEL:
42 OCCUPANTS (0.2 INCHES) = 32" REQ'D / 180" PROVIDED

FIRE RESISTANCE RATING (HOURS) — CONSTRUCTION TYPE: II - B

BUILDING ELEMENT	RATING	REFERENCE CODE SECTION/EXCEPTIONS	FIRE SEPARATION DISTANCE (FEET)
STRUCTURAL FRAME, COLUMNS, GIRDERS, & TRUSSES	0	TABLE 601	--
BEARING WALLS			
EXTERIOR	0	TABLE 601	--
INTERIOR	0	TABLE 601	--
NONBEARING WALLS & PARTITIONS			
EXTERIOR	0	TABLE 602	X >/= 30'
INTERIOR	0	TABLE 601	--
FLR. CONST. SUPPORT BEAMS, & JOISTS	0	TABLE 601	--
ROOF CONST. SUPPORT BEAMS, & JOISTS	0	TABLE 601	--
SHAFT - EXIST	N/A	--	--
SHAFT - OTHER	1	SECTION 713.4	--
CORRIDOR SEPARATION	0	TABLE 1020.1	CORRIDOR LOAD LESS THAN 30
OCCUPANCY GROUP SEPARATION	0	TABLE 508.4	w/ SPRINKLERS
PARTY / FIREWALL SEPARATION	N/A	--	--
SMOKE BARRIER SEPARATION	1	SECTION 709.3	--
TENANT SEPARATION	N/A	--	--

LIFE SAFETY SYSTEM REQUIREMENTS:

SPRINKLERS:	☐ NO	■ YES	■ HAS BEEN PROVIDED	SECTION 903.1
PORTABLE FIRE EXTINGUISHERS	☐ NO	■ YES	■ HAS BEEN PROVIDED	SECTION 906.1
FIRE ALARM:	☐ NO	■ YES	■ HAS BEEN PROVIDED	SECTION 907.2.1
SMOKE DETECTION SYSTEM:	☐ NO	■ YES	■ HAS BEEN PROVIDED	SECTION 907.2.8.2
EMERGENCY LIGHTING:	☐ NO	■ YES	■ HAS BEEN PROVIDED	SECTION 1008.1
AREA OF REFUGE:	■ NO	☐ YES	☐ HAS BEEN PROVIDED	
PANIC HARDWARE:	☐ NO	■ YES	■ HAS BEEN PROVIDED	SECTION 1010.1.10

ELEVATOR EXCEPTIONS, SECTION 1104.4

PROJECT INFORMATION

OWNER / CONTACT PERSON: JAMES V. BABB PHONE: (O) 610-376-7481

CODE ENFORCEMENT JURISDICTION: ■ LOCAL ☐ STATE

LEAD DESIGN PROFESSIONAL:

DISCIPLINE:	NAME:	LICENSE #:
ARCHITECTURAL	LEE C. OLSEN, AIA	0088452-X
CIVIL / SITE		
LANDSCAPE		
STRUCTURAL	JAMES C McCARTHY	PE-051494E
MECHANICAL		
ELECTRICAL		
FIRE PROTECTION		

DRAWING INDEX

DRAWING # TITLE

A-0.0 . . . . . TITLE SHEET

SITE :

ARCHITECTURAL :

D-1.0 . . . . . EXISTING BUILDING DEMOLITION PLAN
A-1.0 . . . . . EXISTING BUILDING FLOOR PLAN
A-1.1 . . . . . NEW BUILDING FLOOR PLANS
A-3.0 . . . . . NEW BUILDING ELEVATIONS
A-4.0 . . . . . WALL SECTIONS & DETAILS
A-4.1 . . . . . BUILDING SECTION
A-6.0 . . . . . ENLARGED FLOOR PLANS, INTERIOR ELEVATIONS, DETAILS & GENERAL NOTES
A-6.1 . . . . . INTERIOR ELEVATIONS, DETAILS & GENERAL NOTES
A-7.0 . . . . . REFLECTED CEILING PLAN
A-8.0 . . . . . DOOR SCHEDULE, DETAILS & GENERAL NOTES
A-9.0 . . . . . ROOM FINISH SCHEDULE, PARTITION TYPES, DETAILS & GENERAL NOTES

STRUCTURAL -

S-0.0 . . . . . GENERAL STRUCTURAL NOTES
S-1.0 . . . . . FIRST FLOOR AND FDTN. PLAN - NEW BUILDING
S-1.1 . . . . . SECOND FLOOR FRAMING PLAN-NEW BUILDING
S-2.0 . . . . . FOUNDATION DETAILS AND SECTIONS
S-2.1 . . . . . FOUNDATION DETAILS AND SECTIONS
S-2.2 . . . . . OPEN WEB STEEL JOIST DETAILS AND SECTIONS
S-2.3 . . . . . CMU MASONRY DETAILS AND SECTIONS

MECHANICAL :

M-1 . . . . . MECHANICAL - NEW BUILDING FIRST FLOOR PLAN
M-2 . . . . . MECHANICAL - NEW BUILDING MEZZANINE PLAN

ELECTRICAL :

PLUMBING :

OLSEN**DESIGN**GROUP
ARCHITECTS

 # 23718
Public Works Facility
Borough of Wyomissing, Dept. of Public Works

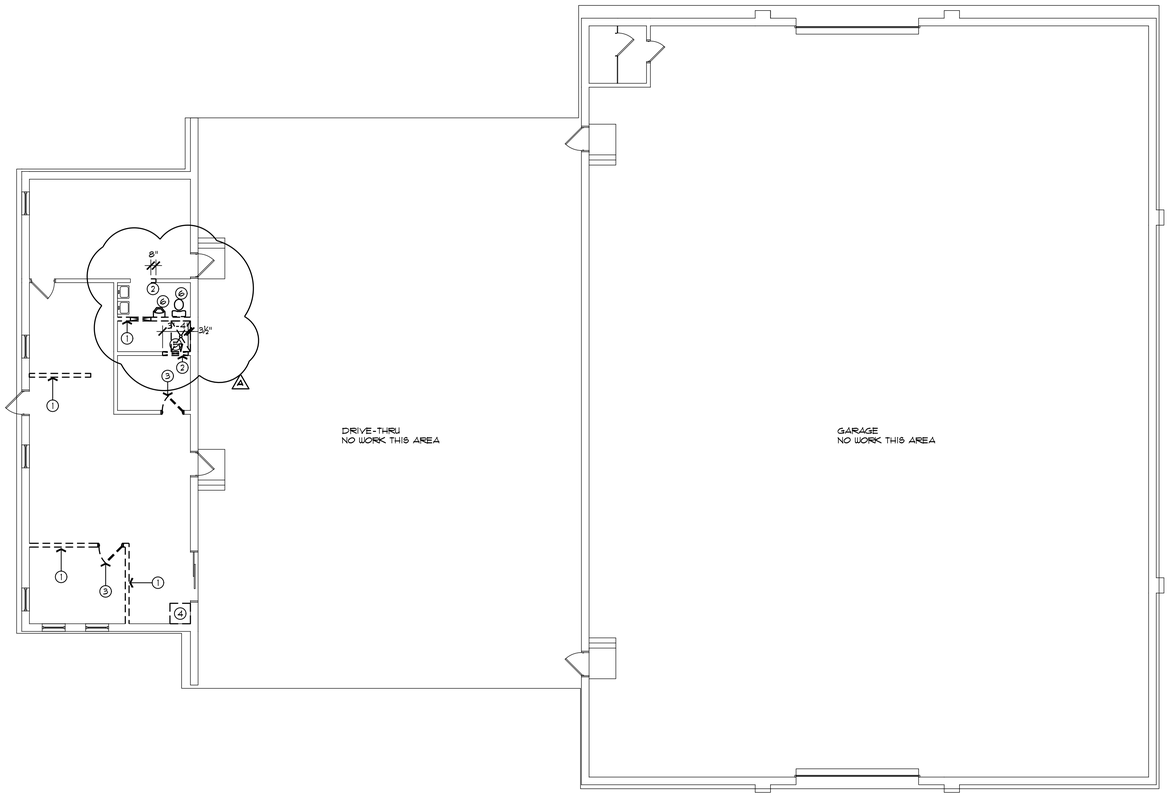

EXISTING BUILDING
DEMOLITION FLOOR PLAN
SCALE: 1/8" = 1'-0"

0 5' 10' 20'

DEMOLITION NOTES:

1. REMOVE EXISTING WALL IN IT'S ENTIRETY
2. REMOVE EXISTING WALL AS SHOWN. OPENING SIZE TO ACCOMMODATE NEW DOOR. SEE A-8.0 FOR DOOR SIZE.
3. REMOVE EXISTING DOOR AND FRAME
4. REMOVE EXISTING MOP SINK. CAP UTILITIES. SALVAGE FOR REUSE
5. REMOVE EXISTING SHOWER. CAP UTILITIES.
6. REMOVE EXISTING PLUMBING FIXTURE, CAP UTILITIES.

SUSTAINABLE
PLANNING
ARCHITECTURE
INTERIOR DESIGN

OLSENDESIGNGROUP
ARCHITECTS

2345 Bernville Road
Reading, PA 19605
610.371.9606
Fax 610.371.9607
www.odgarchitects.com

COPYRIGHT © 2023
ALL RIGHTS RESERVED, NEITHER ALL NOR ANY PART OF THIS DOCUMENT MAY BE AMENDED, REPRODUCED, COPIED OR USED IN ANY FORM OR MANNER EXCEPT PURSUANT TO CONTRACT WITH OR WITH THE SPECIFIC WRITTEN PERMISSION OF Olsen Design Group Architects, Inc.
PROPERTY RIGHTS ARE EXPRESSLY RESERVED BY Olsen Design Group Architects, Inc.

McCarthy Engineering Assoc.
1121 Snyder Road
West Lawn, PA 19609
610-373-8001 (FAX) 610-373-8077

Renovations and New Buildings for

Public Works Facility

Borough of Wyomissing , Department of Public Works
4th and Oley Street
Wyomissing, PA 19610

△	Date	Activities	Dwg By	Chk By
△	8/1/23	ADDENDUM		
	7/19/23	ISSUED FOR BID		

Revisions:

Drawing Title:
EXISTING BUILDING
DEMOLITION PLAN

Project No: 23718	**Scale:** AS NOTED
Drawn By: CAR	**Contract Date:**
Checked By: LCO	**Last Update:** 7/14/23
Seal:	**Drawing No:** D-1.0

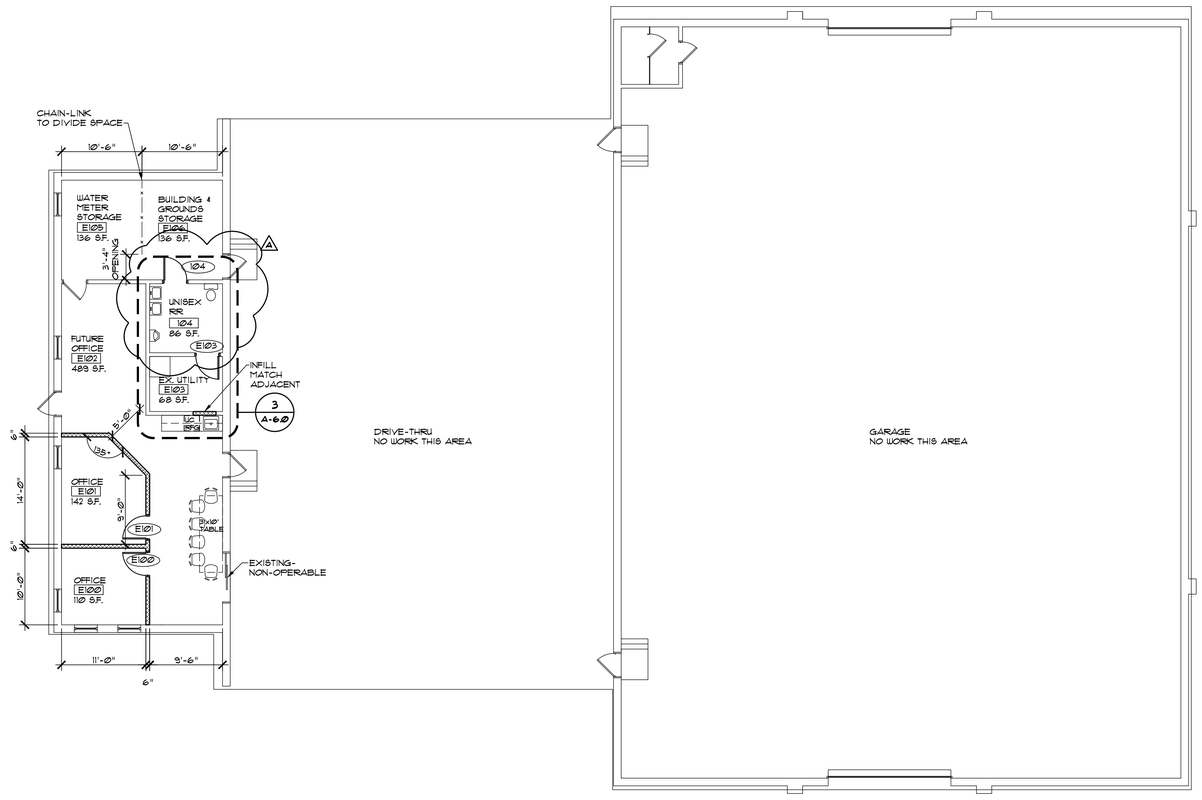

EXISTING BUILDING FLOOR PLAN
SCALE: 1/8" = 1'-0"

1' 0 5' 10' 20'

SUSTAINABLE
PLANNING
ARCHITECTURE
INTERIOR DESIGN

OLSENDESIGNGROUP ARCHITECTS

2345 Bernville Road
Reading, PA 19605
610.371.9606
Fax 610.371.9607
www.odgarchitects.com

COPYRIGHT © 2023
ALL RIGHTS RESERVED, NEITHER ALL NOR ANY PART OF THIS DOCUMENT MAY BE AMENDED, REPRODUCED, COPIED OR USED IN ANY FORM OR MANNER EXCEPT PURSUANT TO CONTRACT WITH OR WITH THE SPECIFIC WRITTEN PERMISSION OF Olsen Design Group Architects, Inc.
PROPERTY RIGHTS ARE EXPRESSLY RESERVED BY Olsen Design Group Architects, Inc.

McCarthy Engineering Assoc.
1121 Snyder Road
West Lawn, PA 19609
610-373-8001 (FAX) 610-373-8077

Renovations and New Buildings for

Public Works Facility

Borough of Wyomissing , Department of Public Works
4th and Oley Street
Wyomissing, PA 19610

	Date	Activities	Dwg By	Chk By
2	8/1/23	ADDENDUM		
1	7/19/23	ISSUED FOR BID		

Revisions:

Drawing Title:
EXISTING BUILDING FLOOR PLAN

Project No: 23718	**Scale:** 1/8" = 1'-0"
Drawn By: CAR	**Contract Date:**
Checked By: LCO	**Last Update:** 7/14/23
Seal:	**Drawing No:** A-1.0

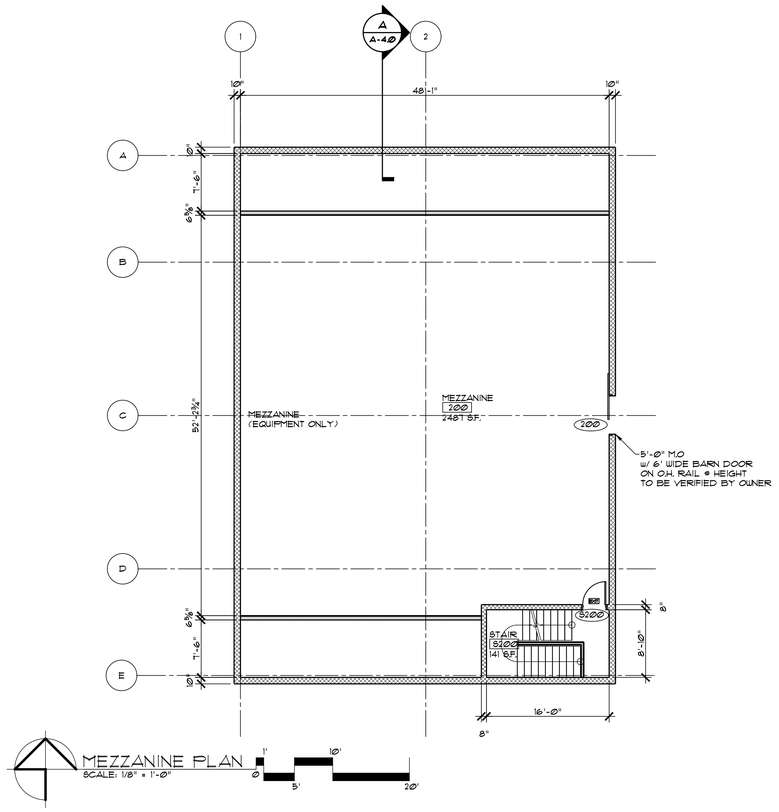

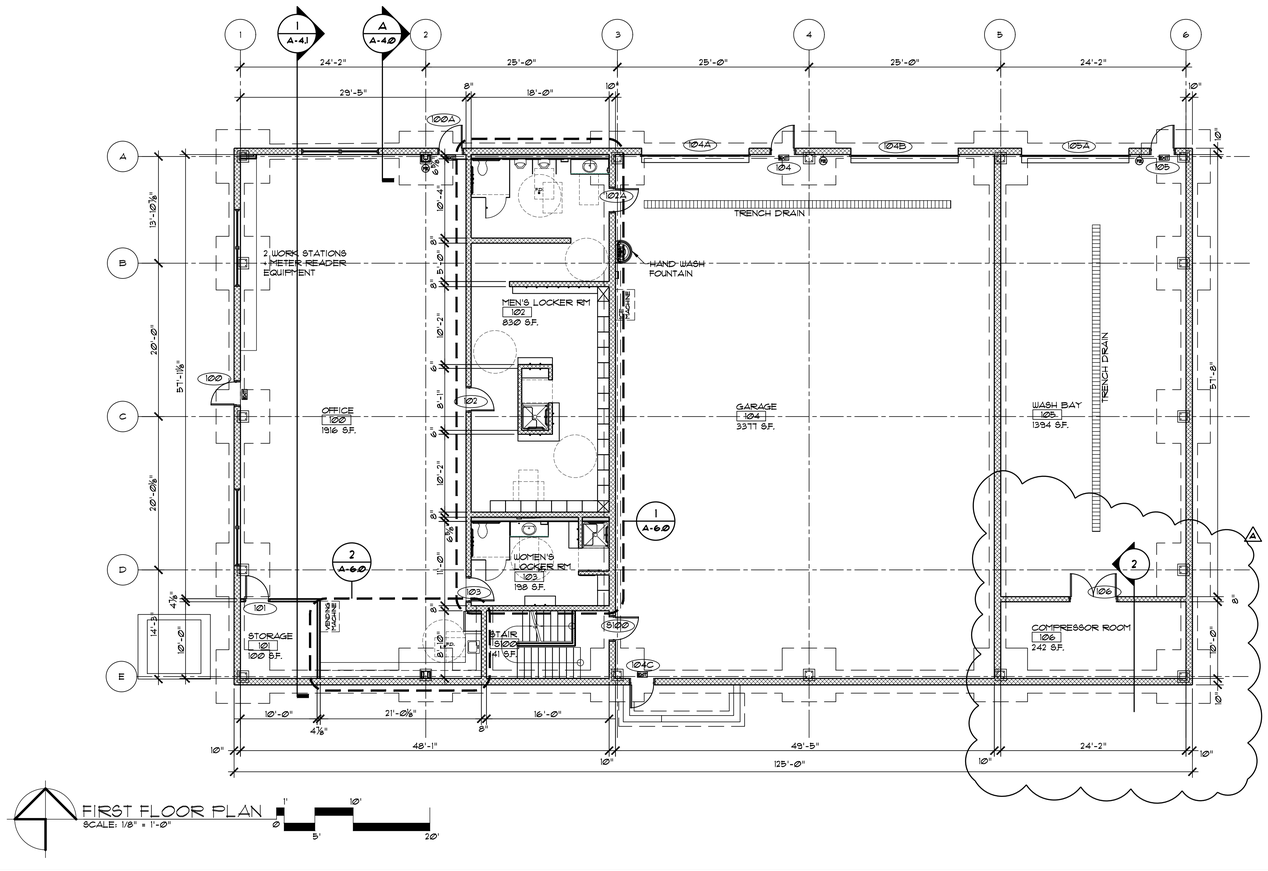

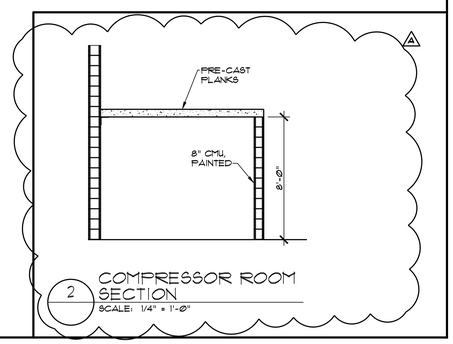

SUSTAINABLE
PLANNING
ARCHITECTURE
INTERIOR DESIGN

OLSENDESIGNGROUP
ARCHITECTS

2345 Bernville Road
Reading, PA 19605
610.371.9606
Fax 610.371.9607
www.odgarchitects.com

COPYRIGHT © 2023
ALL RIGHTS RESERVED, NEITHER ALL NOR ANY PART OF THIS DOCUMENT MAY BE AMENDED, REPRODUCED, COPIED OR USED IN ANY FORM OR MANNER EXCEPT PURSUANT TO CONTRACT WITH OR WITH THE SPECIFIC WRITTEN PERMISSION OF Olsen Design Group Architects, Inc. PROPERTY RIGHTS ARE EXPRESSLY RESERVED BY Olsen Design Group Architects, Inc.

McCarthy Engineering Assoc.
1121 Snyder Road
West Lawn, PA 19609
610-373-8001 (FAX) 610-373-8077

Renovations and New Buildings for

Public Works Facility

Borough of Wyomissing , Department of Public Works
4th and Oley Street
Wyomissing, PA 19610

	Date	Activities	Dwg By	Chk By
2	8/1/23	ADDENDUM		
1	7/19/23	ISSUED FOR BID		

Revisions:

Drawing Title:
NEW BUILDING
FLOOR PLAN

Project No: 23718	**Scale:** 1/8" = 1'-0"
Drawn By: CAR	**Contract Date:**
Checked By: LCO	**Last Update:** 7/6/23
Seal:	**Drawing No:** A-1.1

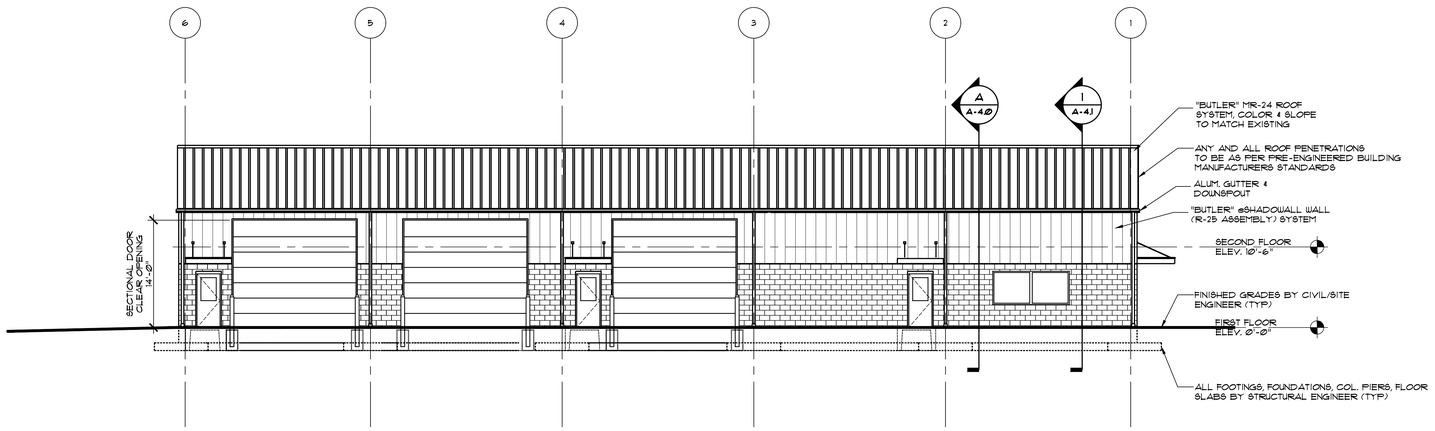

A A-3.0 NORTH ELEVATION
SCALE: 1/8" = 1'-0"

NOTE:
ALL WINDOWS, DOOR, FLASHING AND TRIM BY PRE-ENGINEERED BUILDING MANUF. SUPPLIER (TYP)

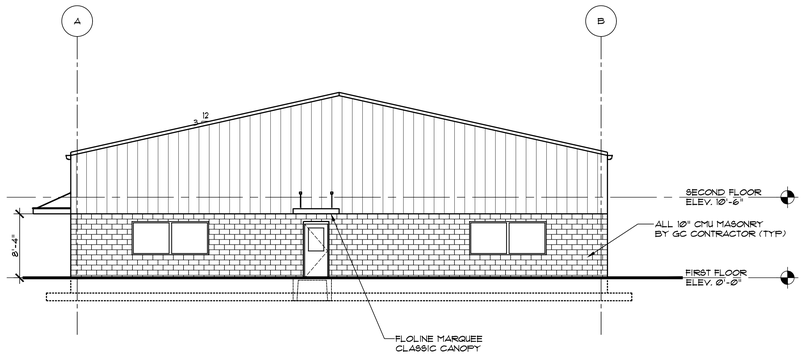

B A-3.0 WEST ELEVATION
SCALE: 1/8" = 1'-0"

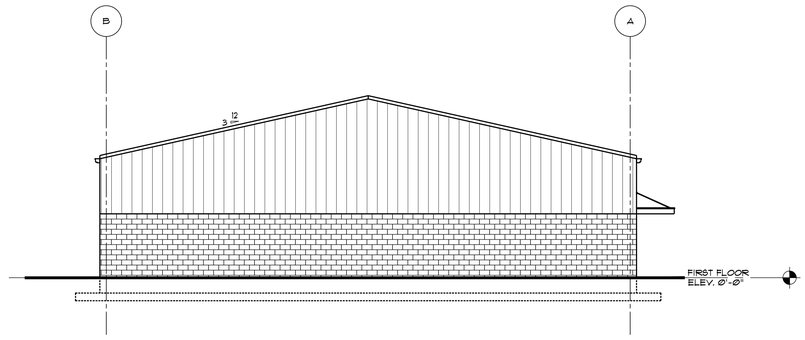

C A-3.0 EAST ELEVATION
SCALE: 1/8" = 1'-0"

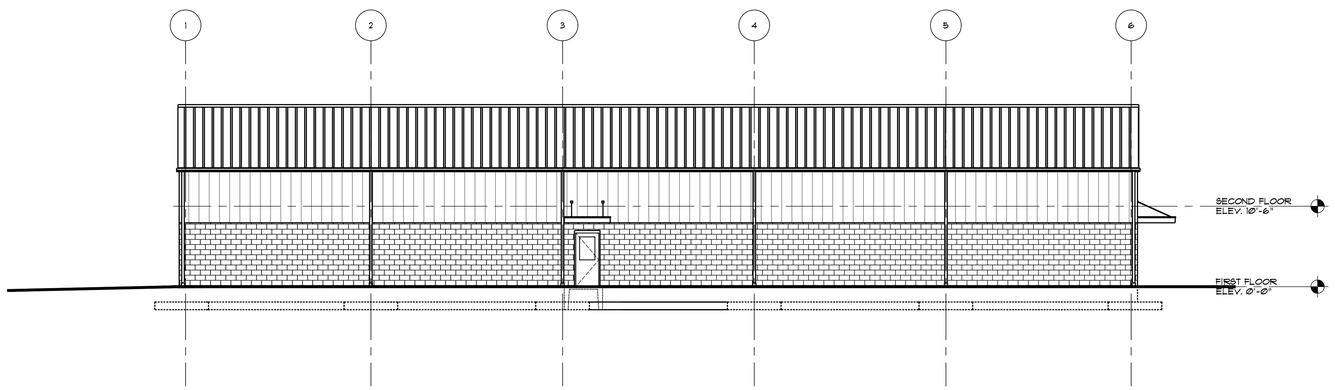

D A-3.0 SOUTH ELEVATION
SCALE: 1/8" = 1'-0"

SUSTAINABLE
PLANNING
ARCHITECTURE
INTERIOR DESIGN

OLSENDESIGNGROUP
ARCHITECTS

2345 Bernville Road
Reading, PA 19605
610.371.9606
Fax 610.371.9607
www.odgarchitects.com

COPYRIGHT © 2023
ALL RIGHTS RESERVED, NEITHER ALL NOR ANY PART OF THIS DOCUMENT MAY BE AMENDED, REPRODUCED, COPIED OR USED IN ANY FORM OR MANNER EXCEPT PURSUANT TO CONTRACT WITH OR WITH THE SPECIFIC WRITTEN PERMISSION OF Olsen Design Group Architects, Inc.
PROPERTY RIGHTS ARE EXPRESSLY RESERVED BY Olsen Design Group Architects, Inc.

McCarthy Engineering Assoc.
1121 Snyder Road
West Lawn, PA 19609
610-373-8001 (FAX) 610-373-8077

Renovations and New Buildings for

Public Works Facility

Borough of Wyomissing , Department of Public Works
4th and Oley Street
Wyomissing, PA 19610

△	Date	Activities	Dwg By	Chk By
	7/19/23	ISSUED FOR BID		

Revisions:

Drawing Title:
NEW BUILDING ELEVATIONS

Project No: 23718	**Scale:** 1/8" = 1'-0"
Drawn By: CAR	**Contract Date:**
Checked By: LCO	**Last Update:** 7/6/23
Seal:	**Drawing No:** A-3.0

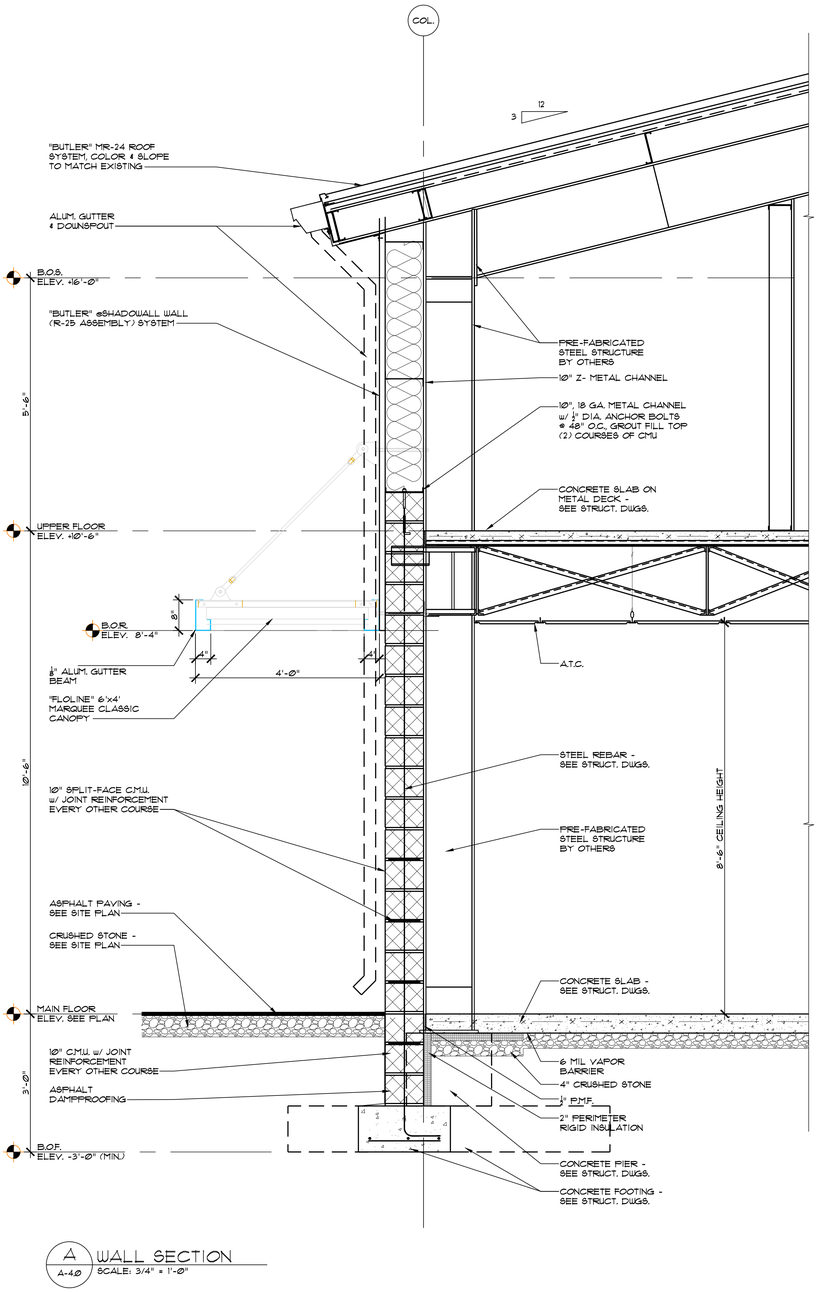

A / A-4.0 WALL SECTION
SCALE: 3/4" = 1'-0"

SUSTAINABLE
PLANNING
ARCHITECTURE
INTERIOR DESIGN

OLSENDESIGNGROUP
ARCHITECTS

2345 Bernville Road
Reading, PA 19605
610.371.9606
Fax 610.371.9607
www.odgarchitects.com

COPYRIGHT © 2023
ALL RIGHTS RESERVED, NEITHER ALL NOR ANY PART OF THIS DOCUMENT MAY BE AMENDED, REPRODUCED, COPIED OR USED IN ANY FORM OR MANNER EXCEPT PURSUANT TO CONTRACT WITH OR WITH THE SPECIFIC WRITTEN PERMISSION OF Olsen Design Group Architects, Inc.
PROPERTY RIGHTS ARE EXPRESSLY RESERVED BY Olsen Design Group Architects, Inc.

McCarthy Engineering Assoc.
1121 Snyder Road
West Lawn, PA 19609
610-373-8001 (FAX) 610-373-8077

Renovations and New Buildings for

Public Works Facility

Borough of Wyomissing , Department of Public Works
4th and Oley Street
Wyomissing, PA 19610

△	Date	Activities	Dwg By	Chk By
	7/19/23	ISSUED FOR BID		

Revisions:

Drawing Title:
WALL SECTIONS & DETAILS

Project No: 23718	**Scale:** AS NOTED
Drawn By: SWW	**Contract Date:**
Checked By: LCO	**Last Update:** 7/6/23
Seal:	**Drawing No:** A-4.0

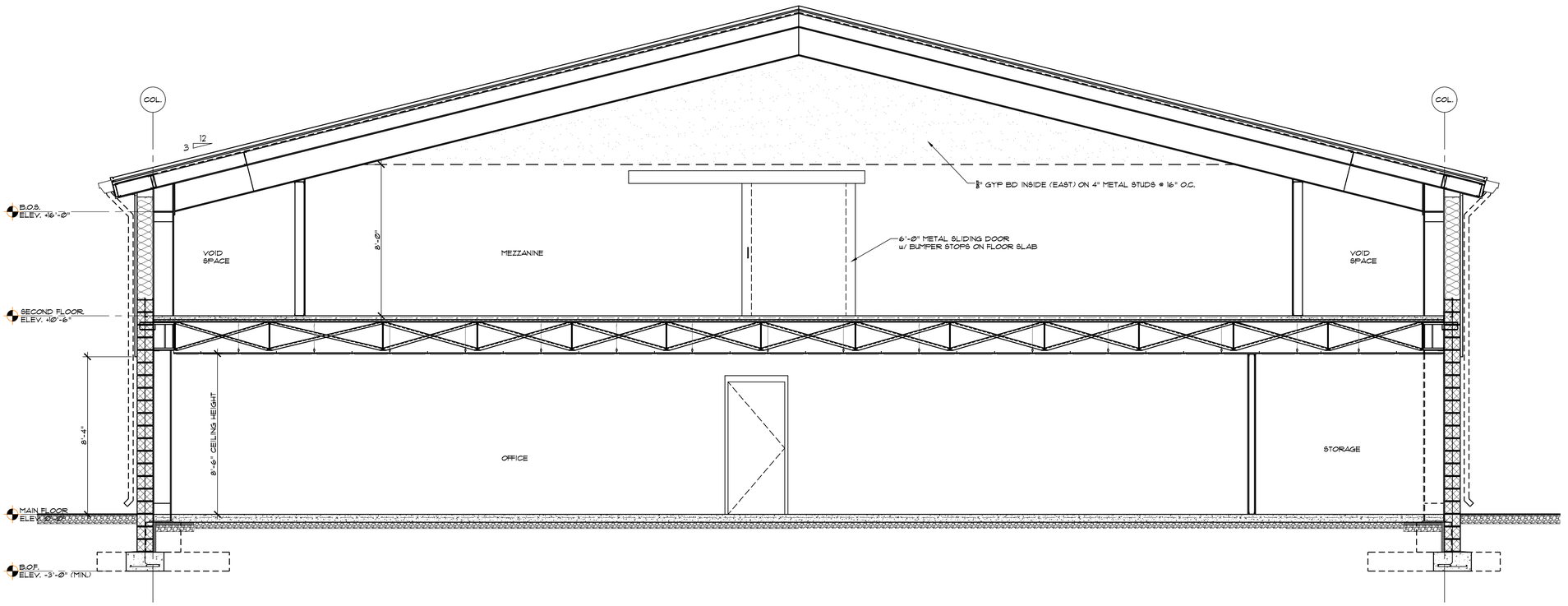

1 A-4.1 BUILDING SECTION
SCALE: 3/8" = 1'-Ø"

SUSTAINABLE
PLANNING
ARCHITECTURE
INTERIOR DESIGN

OLSENDESIGNGROUP
ARCHITECTS

2345 Bernville Road
Reading, PA 19605
610.371.9606
Fax 610.371.9607
www.odgarchitects.com

COPYRIGHT © 2023
ALL RIGHTS RESERVED, NEITHER ALL NOR ANY PART OF THIS DOCUMENT MAY BE AMENDED, REPRODUCED, COPIED OR USED IN ANY FORM OR MANNER EXCEPT PURSUANT TO CONTRACT WITH OR WITH THE SPECIFIC WRITTEN PERMISSION OF Olsen Design Group Architects, Inc.
PROPERTY RIGHTS ARE EXPRESSLY RESERVED BY Olsen Design Group Architects, Inc.

McCarthy Engineering Assoc.
1121 Snyder Road
West Lawn, PA 19609
610-373-8001 (FAX) 610-373-8077

Renovations and New Buildings for

Public Works Facility

Borough of Wyomissing , Department of Public Works
4th and Oley Street
Wyomissing, PA 19610

△	Date	Activities	Dwg By	Chk By
	7/19/23	ISSUED FOR BID		

Revisions:

Drawing Title:
BUILDING SECTIONS

Project No: 23718	**Scale:** AS NOTED
Drawn By: CAR	**Contract Date:**
Checked By: LCO	**Last Update:** 7/6/23
Seal:	**Drawing No:** A-4.1

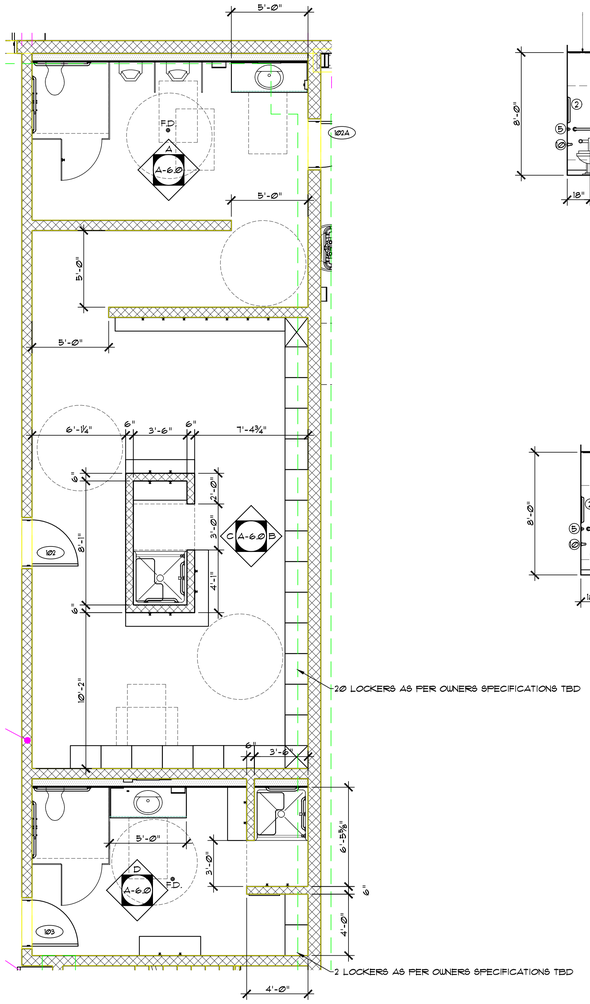

1 A-6.Ø ENLARGED PLAN
SCALE: 1/4" = 1'-Ø"

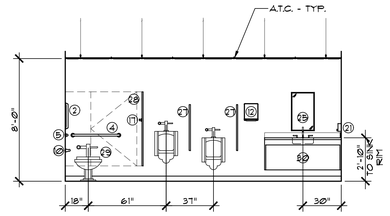

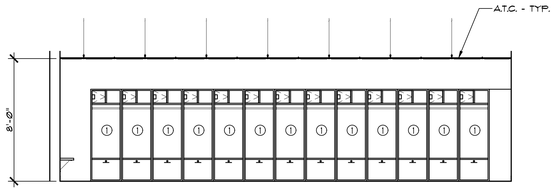

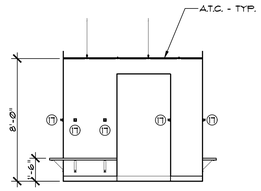

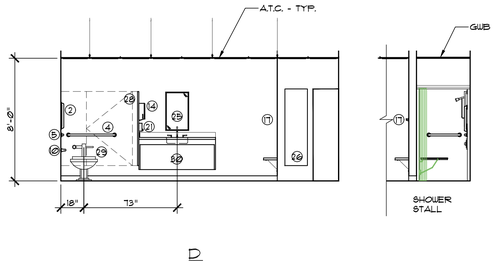

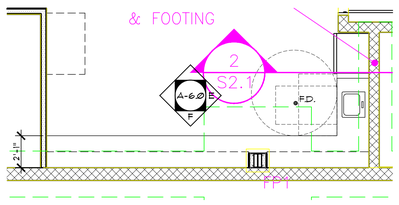

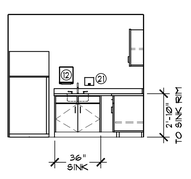

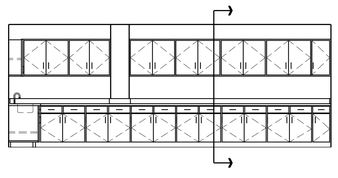

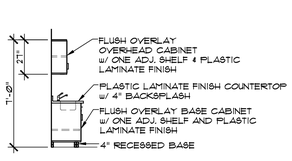

2 A-6.Ø ENLARGED PLAN
SCALE: 1/4" = 1'-Ø"

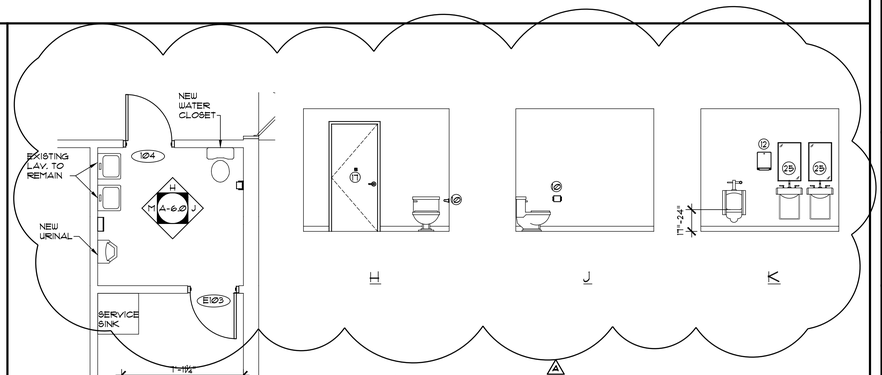

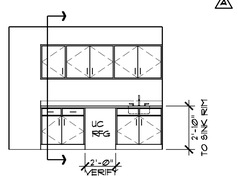

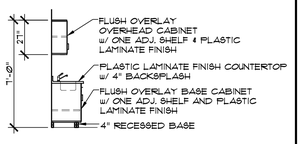

3 A-6.Ø EX. BLDG ENLARGED PLAN
SCALE: 1/4" = 1'-Ø"

SUSTAINABLE
PLANNING
ARCHITECTURE
INTERIOR DESIGN
OLSENDESIGNGROUP
ARCHITECTS
2345 Bernville Road
Reading, PA 19605
610.371.9606
Fax 610.371.9607
www.odgarchitects.com

COPYRIGHT © 2023
ALL RIGHTS RESERVED, NEITHER ALL NOR ANY PART OF THIS DOCUMENT MAY BE AMENDED, REPRODUCED, COPIED OR USED IN ANY FORM OR MANNER EXCEPT PURSUANT TO CONTRACT WITH OR WITH THE SPECIFIC WRITTEN PERMISSION OF Olsen Design Group Architects, Inc.
PROPERTY RIGHTS ARE EXPRESSLY RESERVED BY Olsen Design Group Architects, Inc.

McCarthy Engineering Assoc.
1121 Snyder Road
West Lawn, PA 19609
610-373-8001 (FAX) 610-373-8077

Renovations and New Buildings for

Public Works Facility

Borough of Wyomissing , Department of Public Works
4th and Oley Street
Wyomissing, PA 19610

	Date	Activities	Dwg By	Chk By
2	8/1/23	ADDENDUM		
1	7/19/23	ISSUED FOR BID		

Revisions:

Drawing Title:
ENLARGED FLOOR PLANS, INTERIOR ELEVATIONS, DETAILS & GENERAL NOTES

Project No: 23118	**Scale:** AS NOTED
Drawn By: SWW	**Contract Date:**
Checked By: LCO	**Last Update:** 7/14/23
Seal:	**Drawing No:** A-6.Ø

NOTE:
WATER CLOSET BOWLS FOR PUBLIC OR EMPLOYEE TOILET FACILITIES SHALL BE OF THE ELONGATED TYPE. WATER CLOSETS SHALL BE EQUIPPED WITH SEATS OF SMOOTH, NONABSORBENT MATERIAL. ALL SEATS OF WATER CLOSETS PROVIDED FOR PUBLIC OR EMPLOYEE TOILET FACILITIES SHALL BE OF THE HINGED OPEN-FRONT TYPE. INTEGRAL WATER CLOSET SEATS SHALL BE OF THE SAME MATERIAL AS THE FIXTURE. WATER CLOSET SEATS SHALL BE SIZED FOR THE WATER CLOSET BOWL TYPE.

H.C. TOILETS AND GRAB BARS ARE INSTALLED AS SHOWN UNLESS OTHERWISE NOTED.

H.C. TOILETS- OPEN

H.C. TOILET STALL TOILETS AND GRAB BARS ARE INSTALLED AS SHOWN UNLESS OTHERWISE NOTED.

H.C. TOILET STALLS

TURNING RADIUS

LAVATORY

GENERAL A.D.A. DATA:
SCALE: ½" = 1'-0"

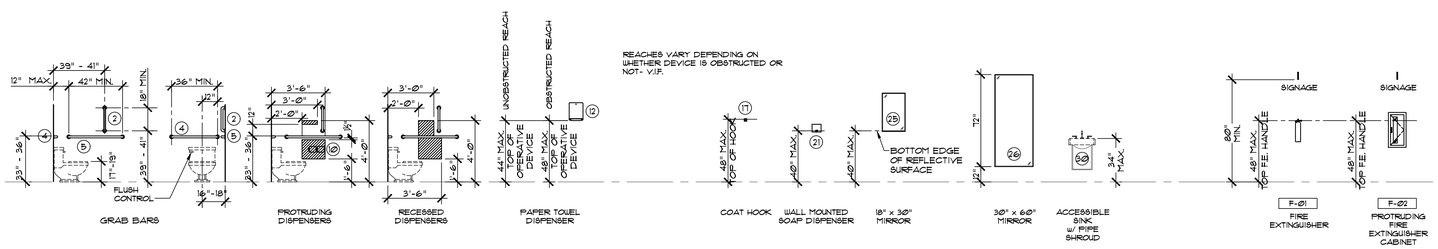

ACCESSORIES MOUNTING HEIGHTS:
SCALE: ½" = 1'-0"

ACCESSORIES LEGEND:

SYM.	DESCRIPTION	MANUFACTURER'S NO.	REMARKS
1	LOCKERS	PER OWNERS SPECS	
2	1½" O.D. x 18" LONG GRAB BAR	B-6806.99x18	- VERTICALLY MOUNTED, SATIN FINISH
3	1½" O.D. x 24" LONG GRAB BAR	B-6806.99x24	- SATIN FINISH
4	1½" O.D. x 36" LONG GRAB BAR	B-6806.99x36	- SATIN FINISH
5	1½" O.D. x 42" LONG GRAB BAR	B-6806.99x42	- SATIN FINISH
10	TOILET PAPER HOLDER	B-265	- SATIN FINISH
12	PAPER TOWEL DISPENSER	B-262	- SATIN FINISH
17	ROBE HOOK	B-211	- SATIN FINISH
18	CURTAIN	2Ø4-2	
19	CURTAIN ROD	B-207x36	- SATIN FINISH
20	CURTAIN ROD HOOKS	2Ø4-1	
21	SOAP DISPENSER	B-2112	- SATIN FINISH
25	18" x 30" MIRROR w/ FRAME	B-165-1830	- SATIN FINISH
26	24" x 72" MIRROR w/ FRAME	B-165-2472	- SATIN FINISH
27	URINAL SCREEN	BOBRICK (SCRC) SIERRA SERIES 1090	
28	TOILET STALL PARTITION	BOBRICK (SCRC) SIERRA SERIES 1090	
30	PIPE SHROUD - CASEWORK		- MATCH MILLWORK MATERIAL
31	ADA SHOWER SEAT	B-5181	- REVERSIBLE FOLDING SEAT
34	WASH FOUNTAIN	BRADLEY #333-531	- POLISHED, SEMICIRCULAR
35	ADA SHOWER CONTROLS		

NOTES:
- UNLESS LISTED OTHERWISE ALL ITEMS ARE "BOBRICK" WASHROOM ACCESSORIES.
- ANY PRODUCTS MAY BE SUBSTITUTED FOR AN EQUAL PRODUCT, IF APPROVED BY THE OWNER.
- (SCRC) SOLID COLOR REINFORCED COMPOSITE.

SUSTAINABLE
PLANNING
ARCHITECTURE
INTERIOR DESIGN

OLSENDESIGNGROUP ARCHITECTS

2345 Bernville Road
Reading, PA 19605
610.371.9606
Fax 610.371.9607
www.odgarchitects.com

COPYRIGHT © 2023
ALL RIGHTS RESERVED, NEITHER ALL NOR ANY PART OF THIS DOCUMENT MAY BE AMENDED, REPRODUCED, COPIED OR USED IN ANY FORM OR MANNER EXCEPT PURSUANT TO CONTRACT WITH OR WITH THE SPECIFIC WRITTEN PERMISSION OF Olsen Design Group Architects, Inc.
PROPERTY RIGHTS ARE EXPRESSLY RESERVED BY Olsen Design Group Architects, Inc.

McCarthy Engineering Assoc.
1121 Snyder Road
West Lawn, PA 19609
610-373-8001 (FAX) 610-373-8077

Renovations and New Buildings for

Public Works Facility

Borough of Wyomissing , Department of Public Works
4th and Oley Street
Wyomissing, PA 19610

Date	Activities	Dwg By	Chk By
7/19/23	ISSUED FOR BID		

Revisions:

Drawing Title:
INTERIOR ELEVATIONS, DETAILS & GENERAL NOTES

Project No: 23118	**Scale:** AS NOTED
Drawn By: SWW	**Contract Date:**
Checked By: LCO	**Last Update:** 6/22/23
Seal:	**Drawing No:** A-6.1

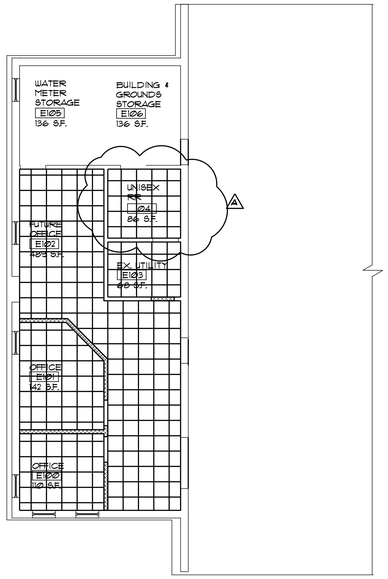

EXISTING BUILDING
REFLECTED CEILING PLAN
SCALE: 1/8" = 1'-0"

0 1' 5' 10' 20'

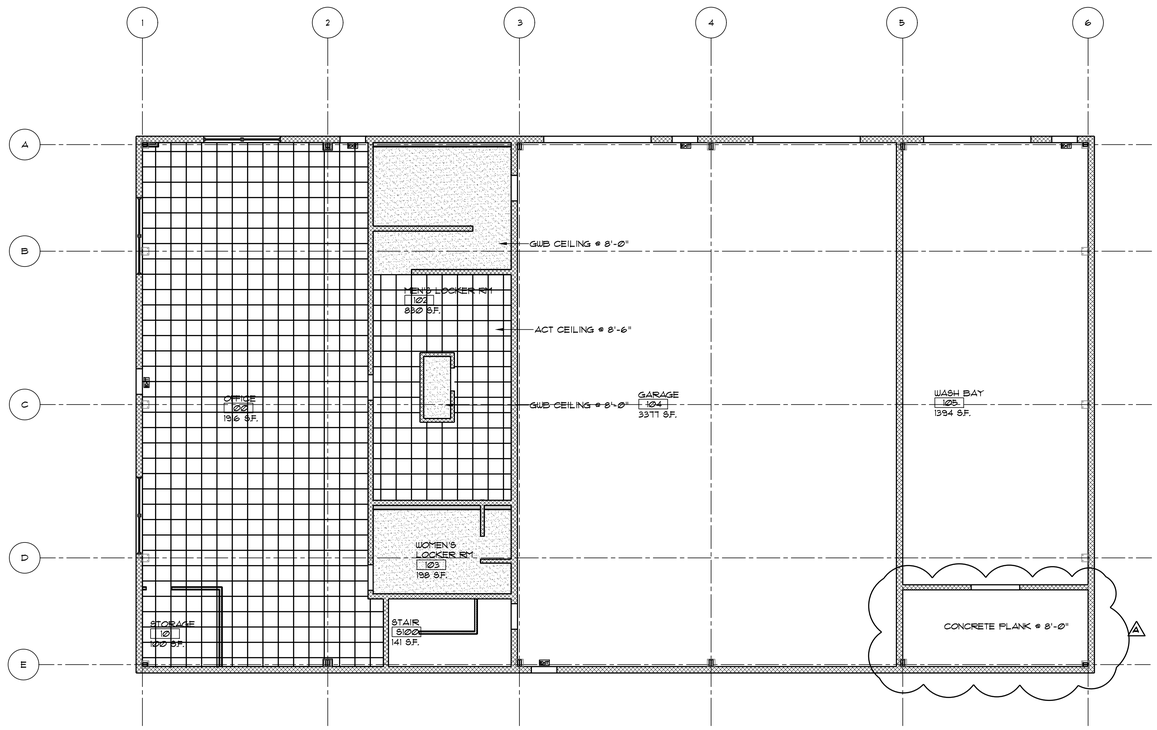

NEW BUILDING
REFLECTED CEILING PLAN
SCALE: 1/8" = 1'-0"

0 1' 5' 10' 20'

SUSTAINABLE
PLANNING
ARCHITECTURE
INTERIOR DESIGN

OLSENDESIGNGROUP
ARCHITECTS

2345 Bernville Road
Reading, PA 19605
610.371.9606
Fax 610.371.9607
www.odgarchitects.com

COPYRIGHT © 2023
ALL RIGHTS RESERVED, NEITHER ALL NOR ANY PART OF THIS DOCUMENT MAY BE AMENDED, REPRODUCED, COPIED OR USED IN ANY FORM OR MANNER EXCEPT PURSUANT TO CONTRACT WITH OR WITH THE SPECIFIC WRITTEN PERMISSION OF Olsen Design Group Architects, Inc.
PROPERTY RIGHTS ARE EXPRESSLY RESERVED BY Olsen Design Group Architects, Inc.

McCarthy Engineering Assoc.
1121 Snyder Road
West Lawn, PA 19609
610-373-8001 (FAX) 610-373-8077

Renovations and New Buildings for

Public Works Facility

Borough of Wyomissing , Department of Public Works
4th and Oley Street
Wyomissing, PA 19610

	Date	Activities	Dwg By	Chk By
2	8/1/23	ADDENDUM		
1	7/19/23	ISSUED FOR BID		

Revisions:

Drawing Title:
REFLECTED CEILING PLANS

Project No: 23718	**Scale:** AS NOTED
Drawn By: SWW	**Contract Date:**
Checked By: LCO	**Last Update:** 6/29/23
Seal:	**Drawing No:** A-7.0

DOOR SCHEDULE -EXISTING BUILDING

NUMBER	DOOR												FRAME							REMARKS
	WIDTH	HGHT	LEAF QTY.	ACTIVE LEAF	THICK	TYPE	MAT'L	GLAZ	LOUVER	LABEL	HD SET	FINISH	TYPE	MAT'L	HEAD	JAMB	SILL	LABEL	FINISH	
104	3'-0"	7'-0"	1	NA	1 ¾"	A	WD	--	--	--	14	STAIN	2	HM	--	--	--	--	PAINT	--
E100	3'-0"	7'-0"	1	NA	1 ¾"	B	WD	2	--	--	4	STAIN	1	HM	3	3	--	--	PAINT	--
E101	3'-0"	7'-0"	1	NA	1 ¾"	B	WD	2	--	--	4	STAIN	1	HM	3	3	--	--	PAINT	--
E103	3'-0"	7'-0"	1	NA	1 ¾"	A	WD	--	--	--	3	STAIN	1	HM	3	3	--	--	PAINT	--

DOOR SCHEDULE -NEW BUILDING

NUMBER	DOOR												FRAME							REMARKS
	WIDTH	HGHT	LEAF QTY.	ACTIVE LEAF	THICK	TYPE	MAT'L	GLAZ	LOUVER	LABEL	HD SET	FINISH	TYPE	MAT'L	HEAD	JAMB	SILL	LABEL	FINISH	
100	3'-0"	7'-0"	1	NA	1 ¾"	B	HM	2	--	--	1	PAINT	2	HM	2	1	A	--	PAINT	--
100A	3'-0"	7'-0"	1	NA	1 ¾"	B	HM	2	--	--	1	PAINT	2	HM	2	1	A	--	PAINT	--
101	3'-0"	7'-0"	1	NA	1 ¾"	A	WD	--	--	--	2	PAINT	3	HM	3	3	--	--	PAINT	--
102	3'-0"	7'-0"	1	NA	1 ¾"	A	WD	--	--	--	5	PAINT	2	HM	2	1	--	--	PAINT	--
102A	3'-0"	7'-0"	1	NA	1 ¾"	A	WD	--	--	--	5	PAINT	2	HM	2	1	--	--	PAINT	--
103	3'-0"	7'-0"	1	NA	1 ¾"	A	WD	--	--	--	5	PAINT	2	HM	2	1	--	--	PAINT	--
104	3'-0"	7'-0"	1	NA	1 ¾"	B	HM	2	--	--	1	PAINT	2	HM	2	1	--	--	PAINT	--
104A	14'-0"	14'-0"	1	NA	1"	D	SI	--	--	--	*	*	--	STL	5	5	--	--	PAINT	* SEE GEN. NOTE 2
104B	14'-0"	14'-0"	1	NA	1"	D	SI	--	--	--	*	*	--	STL	5	5	--	--	PAINT	* SEE GEN. NOTE 2
104C	3'-0"	7'-0"	1	NA	1 ¾"	B	HM	2	--	--	1	PAINT	2	HM	2	1	A	--	PAINT	--
105	3'-0"	7'-0"	1	NA	1 ¾"	B	HM	2	--	--	1	PAINT	2	HM	2	1	A	--	PAINT	--
105A	14'-0"	14'-0"	1	NA	1"	D	SI	--	--	--	*	*	--	STL	5	5	--	--	PAINT	* SEE GEN. NOTE 2
106	6'-0"	7'-0"	2	NA	1 ¾"	A/A	STL	--	--	--	10	PAINT	2	HM	--	--	--	--	PAINT	--
200	5'-0"	7'-0"	0.000*	NA *	NA *	E	HM	--	--	--	*	PAINT	*	*	--	--	--	--	PAINT	* SEE GEN. NOTE 3
S100	3'-0"	7'-0"	1	NA	1 ¾"	B	HM	2	--	1 HR	--	PAINT	2	HM	--	--	--	1 HR	PAINT	FIRE RATED HARDWARE
S200	3'-0"	7'-0"	1	NA	1 ¾"	B	HM	2	--	1 HR	--	PAINT	2	HM	--	--	--	1 HR	PAINT	FIRE RATED HARDWARE

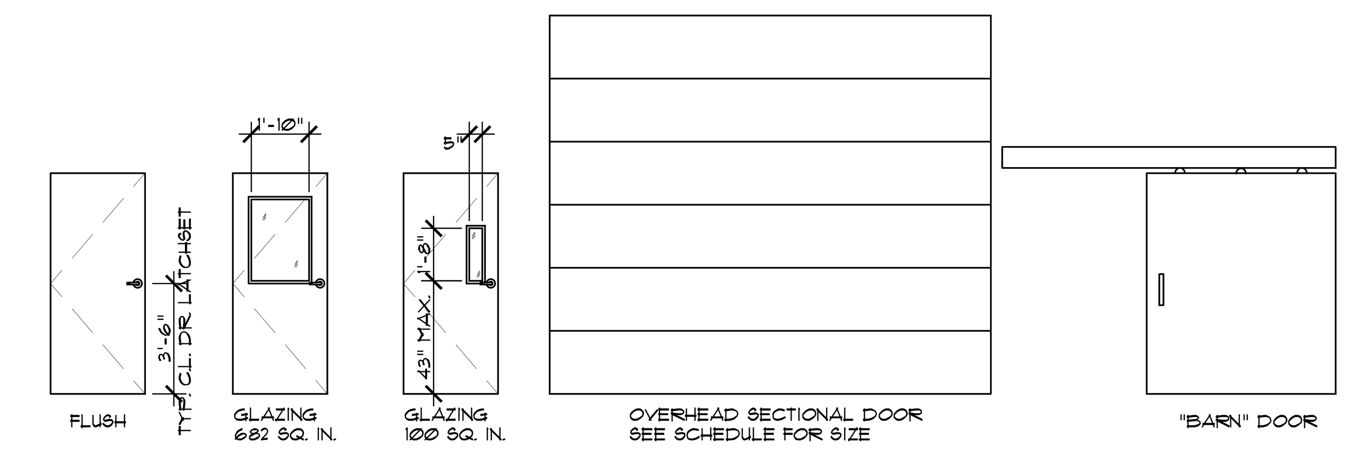

DOOR TYPES:
SCALE: ¼" = 1'-0"

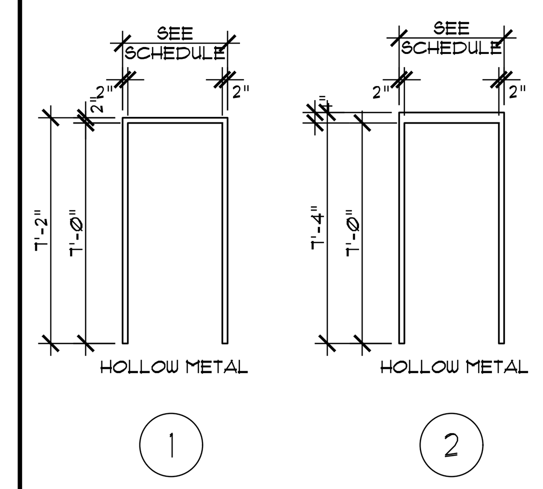

FRAME TYPES:
SCALE: ¼" = 1'-0"

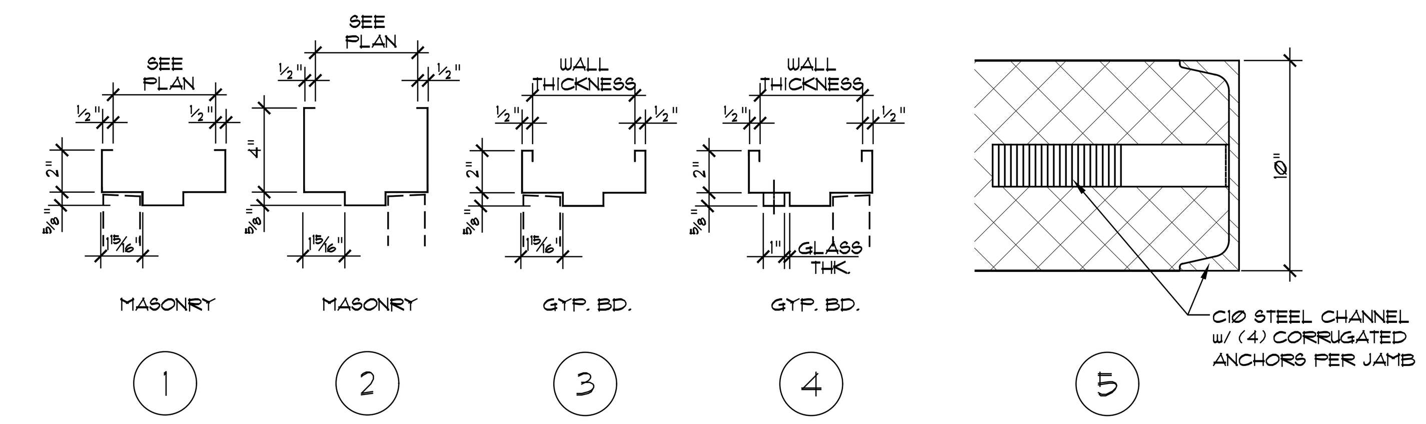

HOLLOW METAL
JAMB TYPES:
SCALE: NONE

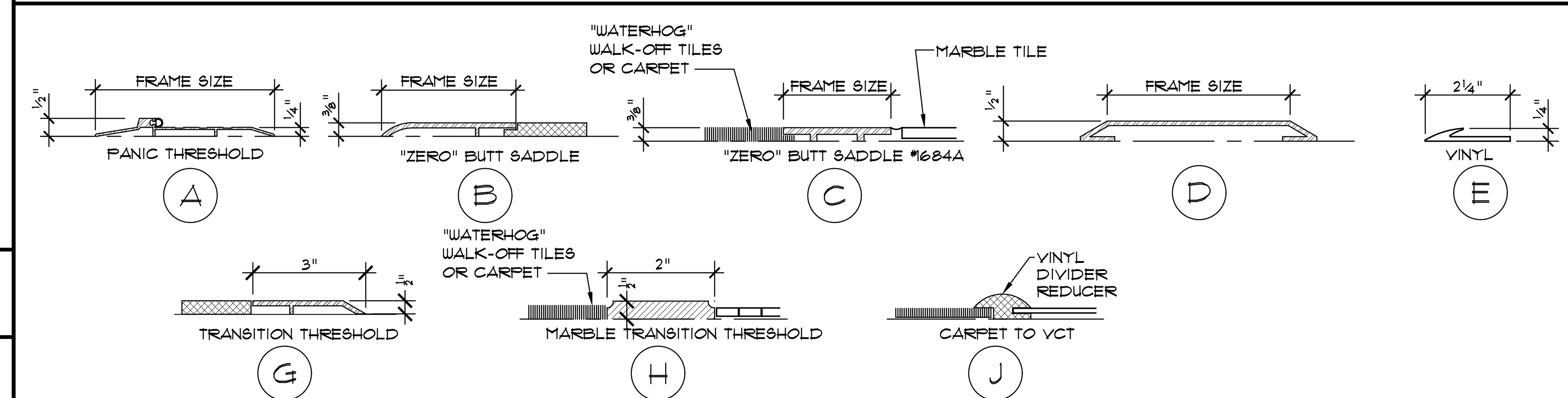

SILL TYPES:
SCALE: NONE

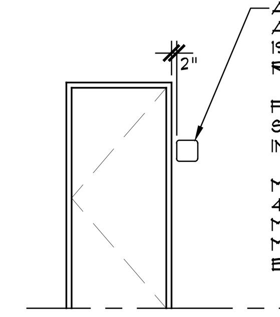

ALL SIGNAGE TO COMPLY w/ THE AMERICANS WITH DISABILITIES ACT OF 1990, INCLUDE PICTOGRAMS WHERE REQUIRED.

FOR SIGNAGE DESIGN OF TYPES AND SIZES SEE THE "DOUBLETREE INTERIOR SIGNAGE SPECIFICATIONS".

MOUNTING HEIGHT: BRAILLE SHALL BE 48 INCHES MINIMUM AND 60 INCHES MAXIMUM ABOVE THE FLOOR, MEASURED TO THE BASELINE OF THE BRAILLE CELL.

TYPICAL ALL DOORS
SIGNAGE / LOCATION:
SCALE: ¼" = 1'-0"

1	1/4" TINTED (TEMPERED)
2	1/4" CLEAR (TEMPERED)
3	1/4" TINTED (PLATE)
4	1/4" CLEAR (PLATE)
5	1" CLEAR INSULATED (TEMPERED) w/ LOW-E
6	1" CLEAR INSULATED (LAMINATED) w/ LOW-E
7	1" CLEAR INSULATED (PLATE) w/ LOW-E
8	1/4" CLEAR WIRE
9	3/16" CLEAR ACRYLIC SET IN RUBBER MOLDING
10	1/4" CLEAR POLYCARBONATE
11	1/4" ONE-WAY VISION (TEMPERED)

GLAZING LEGEND:

NUMBERING SAMPLE:
TYPE #31-MTM

SIGNAGE MOUNTING DATA:
MECHANICAL MOUNTING = MM
VINYL TAPE MOUNTING = VTM
SILASTIC ADHESIVE MOUNTING = SAM
MAGNETIC TAPE MOUNTING = MTM
DIMENSIONAL MOUNTING = DM
VELCRO MOUNTING = VM

TYPICAL ALL DOORS
SIGNAGE:
SCALE: NONE

DOOR HARDWARE SCHEDULE:

HARDWARE SET #1
- (1½) PAIR S.S./B.B. HINGES
- AUTO CLOSER - SURFACE MTD.
- FRAME SILENCERS
- THRESHOLD
- WEATHERSTRIPPING SET
- ELECTRIC STRIKE
- CARD READER
- PANIC EXIT DEVICE - RIM TYPE
- LEVER STYLE HANDLES w/ ENTRY LOCKSET
- ADA SIGNAGE - SEE PLAN

HARDWARE SET #2
- (1½) PAIR S.S./B.B. HINGES
- FRAME SILENCERS
- LEVER STYLE STORAGE ROOM LOCKSET
- ADA SIGNAGE - SEE PLAN

HARDWARE SET #3
- (1½) PAIR S.S./B.B. HINGES
- AUTO CLOSER - SURFACE MTD.
- FRAME SILENCERS
- WALL BUMPER
- LEVER STYLE STOREROOM LOCKSET
- ADA SIGNAGE - SEE PLAN

HARDWARE SET #4
- (1½) PAIR S.S./B.B. HINGES
- FRAME SILENCERS
- WALL BUMPER
- LEVER STYLE OFFICE LOCKSET
- ADA SIGNAGE - SEE PLAN

HARDWARE SET #5
- PUSH / PULL BAR
- AUTO CLOSER - SURFACE MTD.
- ADA SIGNAGE - SEE PLAN

HARDWARE SET #6
- (1½) PAIR S.S./B.B. HINGES
- (1) AUTO CLOSER - SURFACE MTD.
- (3) FRAME SILENCERS
- (1) PANIC EXIT DEVICE - RIM TYPE
- (1) LEVER STYLE HANDLES w/ PASSAGE LATCHSET
- ADA SIGNAGE - SEE PLAN

HARDWARE SET #7
- (1½) PAIR S.S./B.B. HINGES
- (3) FRAME SILENCERS
- (1) WALL BUMPER
- (1) LEVER STYLE HANDLES w/ STORAGE ROOM LOCKSET
- ADA SIGNAGE - SEE PLAN

HARDWARE SET #8
- (1½) PAIR S.S./B.B. HINGES
- (1) AUTO CLOSER - SURFACE MTD.
- (3) FRAME SILENCERS
- (2) LEVER STYLE HANDLES w/ PASSAGE LATCHSET
- ADA SIGNAGE - SEE PLAN

HARDWARE SET #9
- (1½) PAIR S.S./B.B. HINGES w/ NON-REMOVEABLE PINS
- (1) AUTO CLOSER - SURFACE MTD.
- (3) FRAME SILENCERS
- (1) HINGE BUMPER
- (1) ELECTRIC STRIKE
- (1) CARD READER
- (2) LEVER STYLE HANDLES w/ SECUITY LOCKSET
- ADA SIGNAGE - SEE PLAN

HARDWARE SET #10
- (1½) PAIR S.S./B.B. HINGES
- (1) AUTO CLOSER - SURFACE MTD.
- (3) FRAME SILENCERS
- (2) LEVER STYLE HANDLES w/ STORAGE LOCKSET

HARDWARE SET #11
- (1½) PAIR S.S./B.B. HINGES
- (3) FRAME SILENCERS
- (1) WALL BUMPER
- (2) LEVER STYLE HANDLES w/ OFFICE LOCKSET
- ADA SIGNAGE - SEE PLAN

HARDWARE SET #12
RATED HARDWARE
- (1½) PAIR S.S./B.B. HINGES
- (1) AUTO CLOSER - SURFACE MTD.
- (3) FRAME SILENCERS
- (1) WALL BUMPER OR HINGE BUMPER
- (1) PANIC EXIT DEVICE - RIM TYPE
- (1) LEVER STYLE HANDLES w/ PASSAGE LOCKSET
- ADA SIGNAGE - SEE PLAN

HARDWARE SET #13
- (1½) PAIR S.S./B.B. HINGES
- (1) AUTO CLOSER - SURFACE MTD.
- (3) FRAME SILENCERS
- (1) THRESHOLD
- (1) WEATHERSTRIPPING SET
- (1) PANIC EXIT DEVICE - RIM TYPE
- ADA SIGNAGE - SEE PLAN

HARDWARE SET #14
- (1½) PAIR S.S./B.B. HINGES
- (3) FRAME SILENCERS
- LEVER STYLE PRIVACY LOCKSET

HARDWARE SET #15
- (1½) PAIR S.S./B.B. HINGES
- (1) AUTO CLOSER - SURFACE MTD.
- (3) FRAME SILENCERS
- (1) PANIC EXIT DEVICE - RIM TYPE
- (1) LEVER STYLE HANDLES w/ PASSAGE LOCKSET
- ADA SIGNAGE - SEE PLAN

HARDWARE SET #16
- (1½) PAIR S.S./B.B. HINGES
- (1) AUTO CLOSER - SURFACE MTD.
- (3) FRAME SILENCERS
- (1) THRESHOLD
- (1) WEATHERSTRIPPING SET
- (1) PANIC EXIT DEVICE - RIM TYPE
- (1) LEVER STYLE HANDLES w/ PASSAGE LATCHSET
- ADA SIGNAGE - SEE PLAN

HARDWARE SET #17
- (3) PAIR S.S./B.B. HINGES
- (2) BALL CATCHES (TOP JAMB)
- (2) LEVER STYLE HANDLES w/ DUMMY FUNCTION
- ADA SIGNAGE - SEE PLAN

GENERAL NOTES:

1. ALL HARDWARE SHALL BE CLASS A.
2. OVERHEAD VERTICAL LIFT SECTIONAL DOOR SPECIFICATION:
   (5) 20'-0"W x 16'-0"HT. "OVERHEAD DOOR", THERMACORE SECTIONAL STEEL DOOR #591, INSULATED HEAVY-DUTY, STEEL-POLYURETHANE PANEL CONSTRUCTION

   (2) 18'-0"W x 16'-0"HT. "OVERHEAD DOOR", THERMACORE SECTIONAL STEEL DOOR #591, INSULATED HEAVY-DUTY, STEEL-POLYURETHANE PANEL CONSTRUCTION.

   (1) 16'-0"W x 16'-0"HT. "OVERHEAD DOOR", THERMACORE SECTIONAL STEEL DOOR #591, INSULATED HEAVY-DUTY, STEEL-POLYURETHANE PANEL CONSTRUCTION.

   OPTIONS FOR BOTH DOORS:
   - PANEL THICKNESS: 1⅜"
   - EXTERIOR SURFACE: RIBBED
   - EXTERIOR STEEL: .015" GALV.
   - DOOR INSULATION: POLYURETHANE, R-14.86 VALUE
   - FINISH COLOR: WHITE
   - MOUNTING: FACE-OF-WALL
   - OPERATION: ELECTRIC ¾ HP, 208V, 3 PHASE
   - STANDARD SPRINGS: 10,000 CYCLE
   - HIGH-USEAGE PACKAGE
   - WEATHERSEAL: AIR INFILTRATION PACKAGE @ 15 MPH = .08 CFM/FT2
   - GUIDES: HEAVY- DUTY STEEL VERTICAL/OVERHEAD LIFT
   - SAFETY BAR: BOTTOM-SENSING EDGE
   - THERMAL BREAK: PVC
   - WARRANTY: 10 YEAR LIMITED DELAMINATION, 1 YEAR LIMITED ON DOOR & 20 YEAR LIMITED ON FLUOROPOLYMER
3. BARN DOOR #200 ON MEZZANINE IS CUSTOM DOOR 6'x7' COVERING A 5' WIDE BY 7' HIGH OPENING FROM MEZZANINE OUT INTO GARAGE. SPECIAL HARDWARE AND ROLLER TRACK WILL BE REQUIRED. SHOP DRAWING FOR THIS DOOR WILL BE REQUIRED BY GC

SUSTAINABLE
PLANNING
ARCHITECTURE
INTERIOR DESIGN
OLSENDESIGNGROUP
ARCHITECTS
2345 Bernville Road
Reading, PA 19605
610.371.9606
Fax 610.371.9607
www.odgarchitects.com

COPYRIGHT © 2023
ALL RIGHTS RESERVED, NEITHER ALL NOR ANY PART OF THIS DOCUMENT MAY BE AMENDED, REPRODUCED, COPIED OR USED IN ANY FORM OR MANNER EXCEPT PURSUANT TO CONTRACT WITH OR WITH THE SPECIFIC WRITTEN PERMISSION OF Olsen Design Group Architects, Inc. PROPERTY RIGHTS ARE EXPRESSLY RESERVED BY Olsen Design Group Architects, Inc.

McCarthy Engineering Assoc.
1121 Snyder Road
West Lawn, PA 19609
610-373-8001 (FAX) 610-373-8077

Renovations and New Buildings for
Public Works Facility
Borough of Wyomissing , Department of Public Works
4th and Oley Street
Wyomissing, PA 19610

Δ	Date	Activities	Dwg By	Chk By
A	8/7/23	ADDENDUM		
	7/19/23	ISSUED FOR BIDDING		

Revisions:

Drawing Title:
DOOR SCHEDULE, DETAILS & GENERAL NOTES

Project No: 23718	Scale: AS NOTED
Drawn By: SWW	Contract Date:
Checked By: LCO	Last Update: 6/29/23
Seal:	Drawing No: A-8.0

PARTITION TYPES

LEGEND:

- XX — INDICATES PARTITION w/ SOUND BATTS
- E — EXISTING PARTITION TO REMAIN, PATCH & REPAIR ANY DAMAGED AREAS - SEE ROOM FINISH SCHEDULE FOR NEW WALL FINISHES.
- M — MATCH EXISTING SURROUNDING PARTITION CONSTRUCTION - SEE ROOM FINISH SCHEDULE FOR NEW WALL FINISHES.

GENERAL NOTES:

1. FOR PARTITION / WALL FINISHES . . . , SEE "ROOM FINISH SCHEDULE".
2. WHERE TILE IS BEING USED AS THE FINISHED SURFACE MATERIAL, THE SUBSTRATE SHALL BE ⅝" TILE BACKER BOARD.
3. NO METAL STUD FRAMING SHALL BE EXPOSED IN ANY FINISHED SPACES.
4. UNLESS OTHERWISE SHOWN, ALL HOLLOW METAL FRAMES SHALL BE LOCATED 3" FROM INSIDE CORNER TO ALLOW FOR PROPER G.W.B. FINISHING.
5. SMOKE PARTITIONS SHALL BE CONTINUOUS PER I.B.C. 2015, SECTION 710 AND SHALL BE SEALED TO RESIST THE PASSAGE OF SMOKE. UTILIZE 3M FD 150 SEALANT OR EQUAL.
6. PROVIDE AND INSTALL M.R. GYPSUM BOARD WITHIN 36" OF ALL UTILITY SINKS.

NO.	DESCRIPTION	RATING	REMARKS
1	6" C.M.U. w/ JOINT REINFORCEMENT EVERY OTHER COURSE (6")		
6 6'	SOUND BATTS 6" METAL STUDS 16 GA. I.S. @ 16" O.C. ⅝" G.W.B. - 1 LAYER, TAPED, SANDED & FINISHED (6⅝")		6' SOUND BATTS FILL STUD CAVITY
2	10" C.M.U. w/ JOINT REINFORCEMENT EVERY OTHER COURSE (10")	1-HOUR	
7 7'	SOUND BATTS 3⅝" METAL STUDS 16 GA. I.S. @ 16" O.C. ⅝" G.W.B. - 1 LAYER EACH SIDE, TAPED, SANDED & FINISHED (4⅛")		7' SOUND BATTS FILL STUD CAVITY
3	10" SPLIT- FACE C.M.U. w/ JOINT REINFORCEMENT EVERY OTHER COURSE R-19 BATT INSUL. 6" METAL STUDS 16 GA. I.S. @ 16" O.C. 6 MIL VAPOR BARRIER ⅝" G.W.B. - 1 LAYER, TAPED, SANDED & FINISHED (1'-4⅝")		
8 8'	SOUND BATTS 6" METAL STUDS 16 GA. I.S. @ 16" O.C. ⅝" G.W.B. - 1 LAYER EACH SIDE, TAPED, SANDED & FINISHED (4¼")		8' SOUND BATTS FILL STUD CAVITY
4	1" METAL SIDING 10" STEEL GIRT R-11 INSULATION 6" METAL STUDS 18 GA. I.S. @ 16" O.C. R-19 BATT INSUL. 6 MIL VAPOR BARRIER ⅝" G.W.B. - 1 LAYER, TAPED, SANDED & FINISHED (1'-5⅝")		
9 9'	SOUND BATTS 6" METAL STUDS 18 GA. I.S. @ 16" O.C. ⅝" G.W.B. - 1 LAYER, EACH SIDE, TAPED, SANDED & FINISHED (7¼")		9' SOUND BATTS FILL STUD CAVITY
5	1" METAL SIDING 10" STEEL GIRT R-22 MIN. INSULATION (11")		
10	8" C.M.U. w/ JOINT REINFORCEMENT EVERY OTHER COURSE (8")	1-HOUR	

ROOM FINISH SCHEDULE -EXISTING BUILDING

NUMBER	ROOM NAME	WALLS NORTH	WALLS SOUTH	WALLS EAST	WALLS WEST	BASE	FLOOR	CEILING MATERIAL	CEILING HEIGHT	AREA	REMARKS
104	UNISEX RR	7	7	7	7	11	25	31	8'-0"	86 S.F.	
E100	OFFICE	6	7	6	7	11	25	31	8'-6"	110 S.F.	
E101	OFFICE	6	7	6	7	11	25	31	8'-6"	142 S.F.	
E102	FUTURE OFFICE	7	6	7	7	11	25	31	8'-6"	489 S.F.	
E103	EX. UTILITY	7	7	7	7	11	25	31	8'-6"	68 S.F.	
E105	WATER METER STORAGE	7	7	7	7	11	25	33	--	136 S.F.	
E106	BUILDING & GROUNDS STORAGE	7	7	7	7	11	25	33	--	136 S.F.	

ROOM FINISH SCHEDULE -NEW BUILDING

NUMBER	ROOM NAME	WALLS NORTH	WALLS SOUTH	WALLS EAST	WALLS WEST	BASE	FLOOR	CEILING MATERIAL	CEILING HEIGHT	AREA	REMARKS
100	OFFICE	6	6	6	6	11	25	31	8'-6"	1916 S.F.	
101	STORAGE	2	6	6	2	11	25	31	8'-6"	100 S.F.	
102	MEN'S LOCKER RM	3/6	6	6	6	11	25	31/35*	8'-6"	830 S.F.	*-SEE A-7.0 FOR CEILING FINISH LOCATIONS
103	WOMEN'S LOCKER RM	6	6	6	6	11	25	31/35*	8'-6"	198 S.F.	*-SEE A-7.0 FOR CEILING FINISH LOCATIONS
104	GARAGE	6	6	6	6	--	25	33	--	3377 S.F.	
105 (A)	WASH BAY	6	6	6	6	--	25	33	--	1394 S.F.	
106	COMPRESSOR ROOM	6	6	6	6		25	33		242 S.F.	
200	MEZZANINE	2	6	6	2	--	25	33	--	2481 S.F.	
S100	STAIR	6	6	6	6	11	25/29	--	--	141 S.F.	SEE STAIR NOTE BELOW
S200	STAIR	6	6	6	6	11	25/29	--	--	141 S.F.	SEE STAIR NOTE BELOW

STAIR TOWER NOTE:
ALL STAIR FRAMING (ie: METAL LANDINGS, CHANNEL STRINGERS, STEPS AND RAILINGS) TO BE PAINTED ON ALL VISIBLE SURFACES

WALL MATERIAL LEGEND:

1. FIXED GLAZING
2. PAINT ON GYPSUM BOARD
3. EPOXY PAINT ON GYPSUM BOARD
4. BRICK
5. CERAMIC TILE
6. PAINT ON CMU
7. PAINT EXISTING FINISH
8.
9. FINISH NOT IN CONTRACT

BASE MATERIAL LEGEND:

11. 4" VINYL BASE
12. 6" WOOD BASE - BEADED STYLE w/SHOE - PAINT
13. 4 ¼" CERAMIC BASE - (1"x1" SQUARE TOP)
14. 4 ¼" CERAMIC BASE - (4 ¼"x 4 ¼" SEMI-GLOSS)
15. 6" CERAMIC BASE
16. RESIN BASE
17.
18.
19. FINISH NOT IN CONTRACT

FLOOR MATERIAL LEGEND:

21. FLOOR TILE - TYPE "A"
22. FLOOR TILE - TYPE "B"
23. CARPET
24. VCT
25. SEALED CONCRETE
26. VINYL PLANK
27.
28.
29. VINYL TREADS

CEILING MATERIAL LEGEND:

31. ACOUSTICAL LAY-IN CEILING "A" (ARMSTRONG 2x4 CIRRUS, SECOND LOOK II - 513)
32. ACOUSTICAL LAY-IN CEILING "B" (ARMSTRONG 2x4 FINE FISSURED - 1728)
33. EXPOSED DECK AND STRUCTURE - PAINT
34. PAINTED FIRE RESISTIVE GYPSUM BOARD
35. PAINTED WATER RESISTANT GYPSUM BOARD
36. PAINTED GYPSUM BOARD
37.
38.
39. FINISH NOT IN CONTRACT

PAINT SCHEDULE

	MATERIAL	COATS	PAINT MATERIALS
EXTERIOR SURFACES	GYPSUM BOARD & CEMENT PLASTER SOFFITS	3	1 COAT OF LATEX PRIMER SEALER 2 COATS OF ACRYLIC LATEX GLOSS PAINT
	STEEL - UNPRIMED	3	1 COAT OF ALKYD PRIMER 2 COATS OF ALKYD ENAMEL GLOSS PAINT
	STEEL - SHOP PRIMED	3	TOUCH-UP WITH ZINC CHROMATE PRIMER 2 COATS OF ALKYD ENAMEL GLOSS PAINT
	STEEL - GALVANIZED	3	1 COAT OF GALVANIZED PRIMER 2 COATS OF ALKYD ENAMEL GLOSS PAINT
	ALUMINUM	3	1 COAT OF ETCHING PRIMER 2 COATS OF ALKYD ENAMEL GLOSS PAINT
	WOOD TRIM	3	1 COAT OF ALKYD PRIMER 2 COATS OF ALKYD ENAMEL SEMI-GLOSS PAINT
	CONCRETE RESTORED MASONRY CEMENT PLASTER	3	1 COAT OF LATEX PRIMER SEALER 2 COATS OF ACRYLIC LATEX SEMI-GLOSS PAINT
	CONCRETE MASONRY UNITS	3	1 COAT OF ACRYLIC MASONRY PRIMER 2 COATS OF ELASTOMERIC PAINT
INTERIOR SURFACES	WOOD - PAINTED	3	1 COAT OF ALKYD PRIMER SEALER 2 COATS OF LATEX SEMI-GLOSS PAINT
	STEEL - UNPRIMED & EXPOSED	3	1 COAT OF ALKYD PRIMER 2 COATS OF ALKYD ENAMEL SEMI-GLOSS PAINT
	STEEL - PRIMED & EXPOSED	3	TOUCH-UP WITH ALKYD PRIMER 2 COATS OF ALKYD ENAMEL SEMI-GLOSS PAINT
	STEEL - GALV. & EXPOSED	3	1 COAT OF GALVANIZE PRIMER 2 COATS OF ALKYD ENAMEL SEMI-GLOSS PAINT
	ALUMINUM - MILL FINISH	3	1 COAT OF ETCHING PRIMER 2 COATS OF ALKYD ENAMEL GLOSS PAINT
	CONCRETE MASONRY UNITS	3	1 COAT OF ACRYLIC LATEX BLOCK FILLER 2 COATS OF ACRYLIC LATEX SEMI-GLOSS PAINT
	GYPSUM BOARD & PLASTER	3	1 COAT OF LATEX PRIMER SEALER 2 COATS OF ACRYLIC LATEX EGGSHELL OR SATIN PAINT
	WOOD TRIM	3	1 COAT OF LATEX PRIMER SEALER 2 COATS OF ACRYLIC LATEX SEMI-GLOSS PAINT
	CONCRETE FLOORS	2	2 COATS OF DUST SEALER
	GYPSUM BOARD & PLASTER CEILING	3	1 COAT OF LATEX PRIMER SEALER 2 COATS OF ACRYLIC LATEX FLAT PAINT
	WALL SURFACE UNDER VINYL WALL COVERING	1	1 COAT OF ALKYD PRIMER SEALER
	WOOD DOORS & TRIM - w/ TRANSPARENT FINISH	3	1 COAT OF STAIN & SEALER 2 COATS OF SEALER
	HOLLOW METAL FRAMES	3	1 COAT OF LATEX PRIMER SEALER 2 COATS OF ACRYLIC LATEX SEMI-GLOSS PAINT
	CONCRETE FLOORS HEAVY DUTY / WET AREAS)	3	1 COAT OF HEAVY DUTY BLOCK PRIMER 2 COATS OF WATERBASED EPOXY PAINT
	EXPOSED DECK	2	2 COATS OF WATERBASED ACRYLIC DRYFALL PAINT

GENERAL NOTES

1. ALL SURFACES RECEIVING PAINT TO BE PROPERLY PREPARED AND READY TO RECEIVE PAINTS IN ACCORDANCE WITH MANUFACTURER'S SPECIFICATIONS. WALLS TO BE SPACKLED (MIN. THREE COATS), SANDED AND PRIMED. ALL SURFACES SHALL BE CLEAN, FREE OF DUST, GREASE, OILS OR ANY FOREIGN SUBSTANCE THAT WILL INTERFERE WITH PAINTS.
2. HOLES, CRACKS, AND OTHER IMPERFECTIONS SHALL BE SUITABLY PATCHED AND FILLED WITH A COMPOUND RECOMMENDED BY THE MANUFACTURER OF THE PAINT AND THE PRIMER. SURFACES SHALL BE BROUGHT TO TRUE, EVEN SURFACES, PRIOR TO PAINTING.
3. ADEQUATE NUMBER OF PRIMER AND FINISH COATS TO BE APPLIED FOR COMPLETE COVERAGE (SEE PAINT SCHEDULE).
4. NUMBER OF COATINGS ARE IN ADDITION TO ANY SHOP COATINGS THAT MAY HAVE ALREADY BEEN APPLIED.
5. GENERAL CONTRACTOR TO SUBMIT COLOR CHARTS TO THE ARCHITECT FOR REVIEW AND SELECTION OF COLORS.
6. GENERAL CONTRACTOR SHALL BE RESPONSIBLE FOR PAINTING THE FOLLOWING ITEMS:
   - ALL INTERIOR AND EXTERIOR HANDRAILS AND GUARDRAILS
   - ALL EXPOSED STRUCTURAL STEEL
   - ALL EXPOSED STEEL FRAMES
   - ALL HOLLOW METAL FRAMES AND DOORS
   - ALL HOLLOW METAL FRAMES AND WOOD DOORS
7. APPLY PAINT IN ACCORDANCE WITH THE MANUFACTURER'S DIRECTIONS. USE APPLICATIONS AND TECHNIQUES BEST SUITED FOR THE TYPE OF MATERIAL BEING APPLIED. APPLY EACH MATERIAL AT NOT LESS THAN THE MANUFACTURER'S RECOMMENDED SPREADING RATE. MATCH APPROVED SAMPLES FOR COLOR TEXTURE, AND COVERAGE.
8. REMOVE ALL HARDWARE, HARDWARE ACCESSORIES, MACHINED SURFACES, PLATES, LIGHTING FIXTURES, AND SIMILAR ITEMS IN PLACE AND NOT TO BE FINISHED OR PAINTED OR PROVIDE SURFACE-APPLIED PROTECTION PRIOR TO SURFACE PREPARATION AND PAINTING OPERATIONS.
9. THE G.C. SHALL BE RESPONSIBLE FOR PROVIDING A CLEAN AND CLEARED FLOOR, FREE OF HOLES OR DEPRESSIONS AND ACCEPTABLE FOR INSTALLATION OF ALL FLOOR COVERING AND UNDERLAYMENTS. ANY DISCREPANCIES SHALL BE IMMEDIATELY REPORTED TO THE ARCHITECT.
10. INSTALLER SHALL BE RESPONSIBLE FOR QUANTITY TAKE-OFF, SUPPLYING, RECEIVING, WAREHOUSING, AND FLOOR COVERINGS AND UNDERLAYMENTS PRIOR TO FABRICATION AND/OR INSTALLATION. ANY MANUFACTURING DEFECT SHALL BE REPORTED TO ARCHITECT.
11. REMOVE COLOR PLATES, SURFACE MOUNTED FIXTURES, ETC. WHERE WALL COVERING IS TO BE APPLIED. FOLLOWING COMPLETION OF WALL COVERING EACH SPACE OR AREA, REINSTALL THE REMOVED ITEMS BY WORKMEN SKILLED IN THE TRADES INVOLVED.
12. REMOVE COLOR PLATES, SURFACE MOUNTED FIXTURES, ETC. WHERE WALL COVERING IS TO BE APPLIED. FOLLOWING COMPLETION OF WALL COVERING EACH SPACE OR AREA, REINSTALL THE REMOVED ITEMS BY WORKMEN SKILLED IN THE TRADES INVOLVED.
13. CONTRACTOR WILL BE RESPONSIBLE FOR SUPPLYING ARCHITECT WITH SAMPLE OF ALL FINISHES TO BE SUPPLIED & INSTALLED BY CONTRACTOR. INFORMATION WILL INCLUDE ALL PAINTS, WOOD FINISH SAMPLE, FLOOR MATERIALS, METAL ETC. ARCHITECT / OWNER WILL HAVE RIGHT OF REFUSAL OF WORK IF THE PRODUCT INSTALLED HAS NOT BEEN PREVIOUSLY APPROVED.
14. ALL GYPSUM BOARD MATERIALS SHALL BE TERMINATED AT UNDERSIDE OF FLOOR OR ROOF DECK UNLESS OTHERWISE NOTED.
15. WHERE REQUIRED, WOOD BASE INSTALLATION TO BE MITERED AT CORNERS AND STRAIGHT RUN JOINTS. ALL NAILS / SCREWS THOROUGHLY SAND EXPOSED SURFACES BETWEEN STAIN AND/OR PAINT APPLICATIONS.

SUSTAINABLE PLANNING ARCHITECTURE INTERIOR DESIGN

OLSENDESIGNGROUP ARCHITECTS

2345 Bernville Road
Reading, PA 19605
610.371.9606
Fax 610.371.9607
www.odgarchitects.com

COPYRIGHT © 2023
ALL RIGHTS RESERVED, NEITHER ALL NOR ANY PART OF THIS DOCUMENT MAY BE AMENDED, REPRODUCED, COPIED OR USED IN ANY FORM OR MANNER EXCEPT PURSUANT TO CONTRACT WITH OR WITH THE SPECIFIC WRITTEN PERMISSION OF Olsen Design Group Architects, Inc. PROPERTY RIGHTS ARE EXPRESSLY RESERVED BY Olsen Design Group Architects, Inc.

McCarthy Engineering Assoc.
1121 Snyder Road
West Lawn, PA 19609
610-373-8001 (FAX) 610-373-8077

Renovations and New Buildings for

Public Works Facility

Borough of Wyomissing , Department of Public Works
4th and Oley Street
Wyomissing, PA 19610

	Date	Activities	Dwg By	Chk By
(A)	8/1/23	ADDENDUM		
	7/19/23	ISSUED FOR BID		

Revisions:

Drawing Title:
ROOM FINISH SCHEDULE, PARTITION TYPES, DETAILS & GENERAL NOTES

Project No: 23718	**Scale:** AS NOTED
Drawn By: SWW	**Contract Date:**
Checked By: LCO	**Last Update:** 6/29/23
Seal:	**Drawing No:** A-9.0

LEGEND AND ABBREVIATIONS

Symbol Description
EXISTING WORK OR WORK DONE BY OTHERS
PIPE, VENT OR COMBUSTION AIR SUPPLY TURNING UP
PIPE TURNING DOWN
SENSOR
THERMOSTAT
CONNECT TO EXISTING
EXTENT OF DEMOLITION
NEW WORK NOTE
DEMOLITION NOTE
DUCT SMOKE DETECTOR
SUPPLY DUCTWORK
EXHAUST OR RETURN DUCTWORK
BALANCING DAMPER (BD)
DIFFUSER
GRILLE OR REGISTER
ELBOW DOWN
DUCT TURNING UP
TRANSITION – RECTANGULAR TO RECTANGULAR
TRANSITION – RECTANGULAR TO ROUND
TRANSITION – ROUND TO ROUND
FLEXIBLE DUCTWORK
MOTOR–OPERATED DAMPER
LOUVER
FIRE DAMPER (FD)
UNION
GAS DETECTION CONTROLLER
NITROGEN–DIOXIDE SENSOR
CARBON–MONOXIDE SENSOR
GAS DETECTION WARNING STROBE

Abbreviation	Meaning
AAD	MOTORIZED AUTOMATIC AIR DAMPER
ABV	ABOVE
ACC	AIR COOLED CHILLER
AFF	ABOVE FINISHED FLOOR
AFG	ABOVE FIXED GRADE
AFR	ABOVE FINISHED ROOF
AH	NON–DUCTED AIR HANDLER
AHU	AIR HANDLING UNIT
AUX	AUXILIARY
BD	BALANCING DAMPER
BDD	BACKDRAFT DAMPER
BFP	BACKFLOW PREVENTER
BHP	BRAKE HORSEPOWER
BTU	BRITISH THERMAL UNIT
CAP	CAPACITY
CD	CONDENSATE DRAIN
CFM	CUBIC FEET PER MINUTE
CH	CABINET HEATER
CLG	CEILING
CU	CONDENSING UNIT
D	DIFFUSER
DB	DRY BULB
DC	DUCT COIL
DN	DOWN
EA	EXHAUST AIR
EAT	ENTERING AIR TEMPERATURE
EBBR	ELECTRIC BASEBOARD RADIATION
EC	ELECTRICAL CONTRACTOR
EER	ENERGY EFFICIENCY RATIO
EF	EXHAUST FAN
EFF	EFFICIENCY
ESD	EXISTING SLOT DIFFUSER
ESP	EXTERNAL STATIC PRESSURE
ESR	EXISTING SUPPLY REGISTER
EXG	EXISTING
EXT	EXTERNAL
EWH	ELECTRIC WALL HEATER
EWT	ENTERING WATER TEMPERATURE
F	FAN
FCU	FAN COIL UNIT
FD	FIRE DAMPER
FLA	FULL LOAD AMPS
FT	FOOT (FEET)
FPM	FOOT (FEET) PER MINUTE
G	GRILLE
GC	GENERAL CONTRACTOR
GF	GAS FURNACE
HD	HEAD
HP	SPLIT SYSTEM HEAT PUMP
HP	HORSEPOWER
IEER	INTEGRATED ENERGY EFFICIENCY RATIO
IH	INFRARED HEATER
KEF	KITCHEN EXHAUST FAN
KW	KILOWATT
L	LOUVER
LAT	LEAVING AIR TEMPERATURE
LF	LINEAR FEET
LRA	LOCKED ROTOR AMPS
MAX	MAXIMUM
MBH	THOUSAND BRITISH THERMAL UNITS
MC/M.C.	MECHANICAL CONTRACTOR
MCA	MINIMUM CIRCUIT AMPS
MIN	MINIMUM
MOCP	MAXIMUM OVERCURRENT PROTECTION
NO	NUMBER
OA	OUTSIDE AIR
OAI	OUTSIDE AIR INTAKE
OED	OPEN ENDED DUCT
P	PUMP
PC	PLUMBING CONTRACTOR
PD	PRESSURE DROP
PL	PLACES
PSI	POUND PER SQUARE INCH
PSIG	POUND PER SQUARE INCH GAUGE
R	REGISTER
RA	RETURN AIR
REF	REFERENCE
RL	REFRIGERANT LIQUID PIPING
RLA	RATED LOAD AMPS
RPM	REVOLUTIONS PER MINUTE
RS	REFRIGERANT SUCTION PIPING
RV	RELIEF VENT
SA	SUPPLY AIR
SEER	SEASONAL ENERGY EFFICIENCY RATIO
SF	SQUARE FEET
SG	SUPPLY GRILLE
SENS	SENSIBLE
SP	STATIC PRESSURE
SR	SUPPLY REGISTER
SSAC	NON–DUCTED SPLIT SYSTEM AIR CONDITIONER
SSHP	NON–DUCTED SPLIT SYSTEM HEAT PUMP
TD	TRANSFER DUCT
TYP	TYPICAL
UH	UNIT HEATER
UV	UNIT VENTILATOR
W/	WITH
W	WATT
WB	WET BULB
WG	WATER GAUGE
WMS	WIRE MESH SCREEN

GENERAL NOTES:

1. THESE DRAWINGS ARE DIAGRAMMATIC AND INDICATE THE GENERAL INTENT OF THE WORK. PROVIDE SHEET METAL SYSTEMS COMPLETE PER SPECIFICATION, SMACNA STANDARDS, AND PER APPLICABLE CODES INCLUDING ALL NECESSARY OFFSETS, FITTINGS, AND SPECIAL RADIUS OR MITERED ELBOWS WHICH ARE REQUIRED DUE TO SPACE CONSTRAINTS OR OTHER CONDITIONS.
2. CONTRACTOR SHALL SUPPLY AND INSTALL ALL NECESSARY SUPPLY DIFFUSERS AND RETURN AIR REGISTERS WHERE INDICATED ON THE DRAWING. COORDINATE LOCATION OF DIFFUSERS AND REGISTERS WITH ARCHITECTURAL DRAWINGS. CENTER CEILING DIFFUSERS AND REGISTERS ON LIGHT FIXTURE PATTERN UNLESS OTHERWISE NOTED. COORDINATE APPROPRIATE BORDER SELECTION WITH CEILING TYPE AND ARCHITECTURAL PLANS. COORDINATE FINISH AND FINAL COLOR WITH ARCHITECTURAL PLANS.
3. DUCT BRANCH TAKEOFF DETAILS WITH VOLUME DAMPER SHOWN ON DETAIL DRAWING APPLY TO ALL LOW VELOCITY DUCTS, SUPPLY DUCTS IN CONSTANT VOLUME SYSTEMS, RETURN AND EXHAUST DUCTS AND OPEN END RETURN DUCTS. PROVIDE VOLUME DAMPER AT EACH TAP TO MAIN DUCT.
4. WHERE INTERNAL DUCT INSULATION OR ACOUSTICAL LINING IS SPECIFIED ON THE DRAWINGS OR IN THE SPECIFICATIONS, THE DUCT SIZES SHALL BE INCREASED TO ACCOMMODATE THE THICKNESS OF INTERNAL INSULATION AND PROTECTION SHEET AS SPECIFIED. DUCT DIMENSIONS ON DRAWINGS ARE INSIDE CLEAR DIMENSIONS.
5. COORDINATE EXACT LOCATIONS OF THERMOSTATS, TEMPERATURE SENSORS AND FAN SWITCHES, WITH ARCHITECTURAL DRAWINGS.
6. PROVIDE FIRE DAMPER OR FIRE SMOKE DAMPER WHERE DUCT PENETRATES RATED WALLS, PARTITIONS OR SLABS AS SHOWN ON PLANS AND ON THE DETAIL SHEETS. MECHANICAL CONTRACTOR TO REVIEW ARCHITECTURAL DRAWINGS AND VERIFY ALL RATED PARTITIONS.
7. THIS CONTRACTOR SHALL INSTALL DUCT SMOKE DETECTORS AND COORDINATE THE LOCATIONS WITH ELECTRICAL CONTRACTOR.
8. CONTRACTOR MUST FIELD VERIFY ALL DIMENSIONS AND CONDITIONS OF THE SITE AND/OR BUILDING.
9. ADEQUATELY BRACE AND PROTECT ALL WORK DURING CONSTRUCTION AGAINST DAMAGE. BREAKAGE, COLLAPSE, DISTORTIONS, AND ALL ALIGNMENTS ACCORDING TO CODES AND STANDARDS OF GOOD PRACTICE.
10. FIRE STOPPING SHALL BE INSTALLED AT ALL PENETRATIONS OF FIRE RATED CONSTRUCTION AS PER SPECIFICATIONS.
11. CONTRACTOR SHALL COORDINATE THE WORK SHOWN ON THESE DRAWINGS WITH ALL OTHER TRADES (E.G., SPRINKLER, ELECTRICAL, TELECOMM, ETC.) FOR WORK IN FINISHED CEILINGS.
12. MAXIMUM LENGTH OF FLEXIBLE DUCT SHALL BE 6'–0" AT DROPS TO DIFFUSERS.
13. WHERE LOW PRESSURE DUCTWORK SIZES ARE NOT INDICATED, USE THE FOLLOWING SCHEDULE:

CFM	DUCT SIZE
0–220	12x10
221–400	16x10
401–700	30x10
701–1100	30x14
1101–1400	34x14

SIZES INDICATE CLEAR INSIDE DIMENSION.

14. ALL OTHER MEDIUM PRESSURE BRANCH TAKE–OFFS SHALL BE SIZED AT A FRICTION LOSS OF 0.10"/100 FEET. PROVIDE A CONICAL CONNECTION FOR CIRCULAR TAKE–OFFS. PROVIDE A 45° SHOE–TAP CONNECTION FOR RECTANGULAR TAKE–OFFS.
15. PROVIDE VOLUME DAMPERS AT EACH LOW PRESSURE SUPPLY, RETURN AND EXHAUST DUCT BRANCH TAKE–OFF.

GRILLES, REGISTERS, AND DIFFUSERS SCHEDULE

TAG	MANUFACTURER	MODEL	TYPE	FACE SIZE (IN x IN)	NECK SIZE	CONSTRUCTION	DEFLECTION	REMARKS
D–1	PRICE	SPD	PLAQUE LAY–IN	24x24	6"ø	STEEL	–	1, 2
D–2	PRICE	SPD	PLAQUE LAY–IN	24x24	8"ø	STEEL	–	1, 2
G–1	PRICE	500	LOUVERED RETURN	24x24	22x22	STEEL	–	1, 2
G–2	PRICE	PDDR	PERF EXHAUST	24x24	8ø	STEEL	–	1, 2
G–3	PRICE	PDDR	PERF EXHAUST	12x12	6ø	STEEL	–	1, 2
G–4	PRICE	PDDR	PERF EXHAUST	24x24	8ø	STEEL	–	1, 2

1

NOTES:

1. COORDINATE FRAME TYPE WITH CEILING TYPE.
2. COLOR/FINISH SHALL BE SELECTED BY THE ARCHITECT.

LOUVER SCHEDULE

TAG	MANUFACTURER / MODEL	DEPTH	FACE SIZE (W x H)	MAX. PRESSURE DROP (IN. W.G.)	SERVICE
L–1	GREENHECK MODEL ESD–435	4 IN.	12x12	0.08	EXHAUST
L–2	GREENHECK MODEL ESD–435	4 IN.	36x36	0.08	EXHAUST
L–3	GREENHECK MODEL ESD–435	4 IN.	36x36	0.08	EXHAUST
L–4	GREENHECK MODEL ESD–435	4 IN.	36x36	0.08	INTAKE
L–5	GREENHECK MODEL ESD–435	4 IN.	36x36	0.08	INTAKE
L–6	GREENHECK MODEL ESD–435	4 IN.	24x18	0.08	INTAKE
L–7	GREENHECK MODEL ESD–435	4 IN.	18x18	0.08	EXHAUST
L–8	GREENHECK MODEL ESD–435	4 IN.	20x20	0.08	EXHAUST

1

NOTES:

1. PROVIDE WITH BIRDSCREEN AND FLANGED FRAME.
2. COLOR/FINISH SHALL BE SELECTED BY THE ARCHITECT.

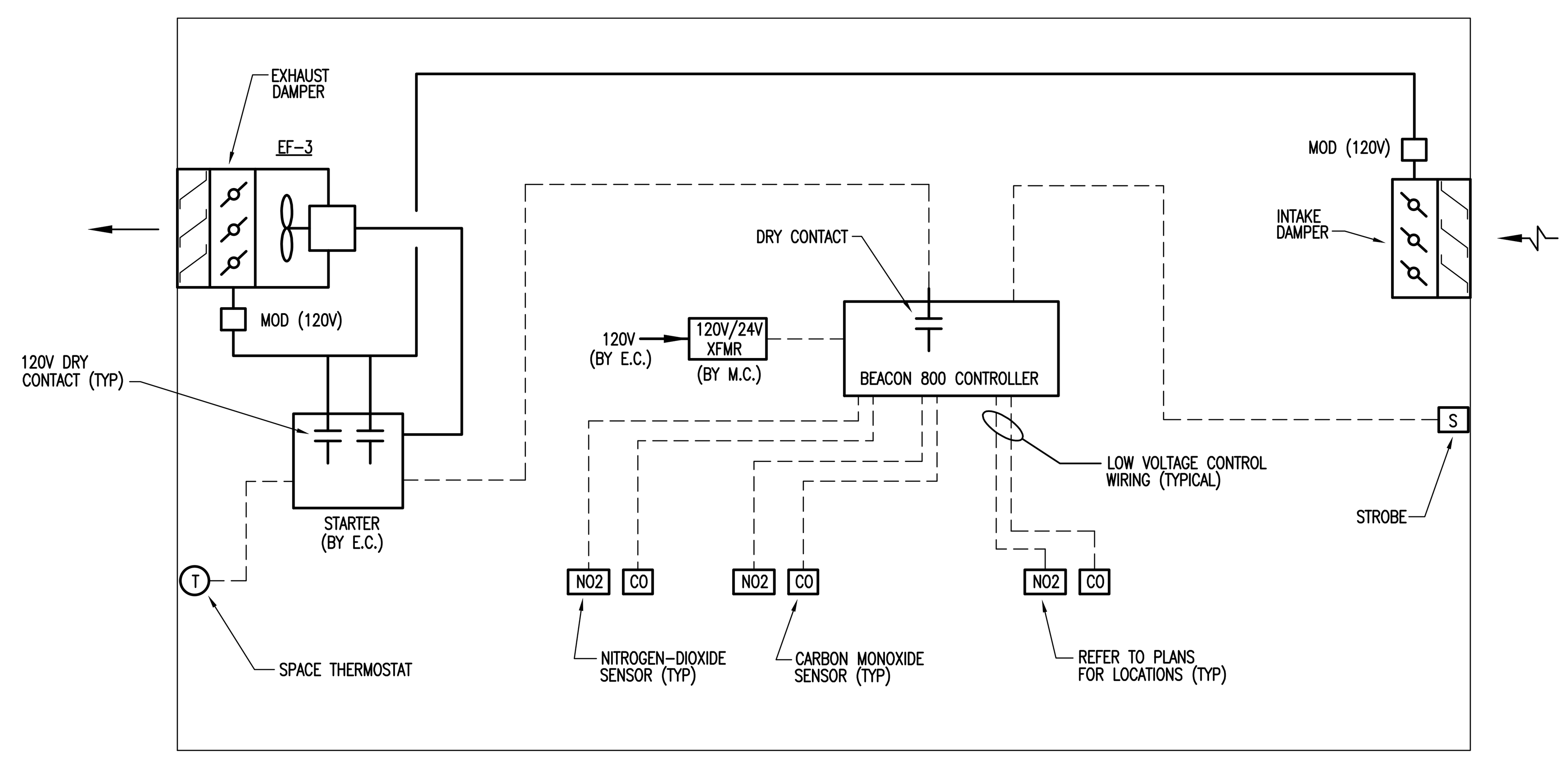

GAS DETECTION SYSTEM CONTROL SCHEMATIC

NOT TO SCALE

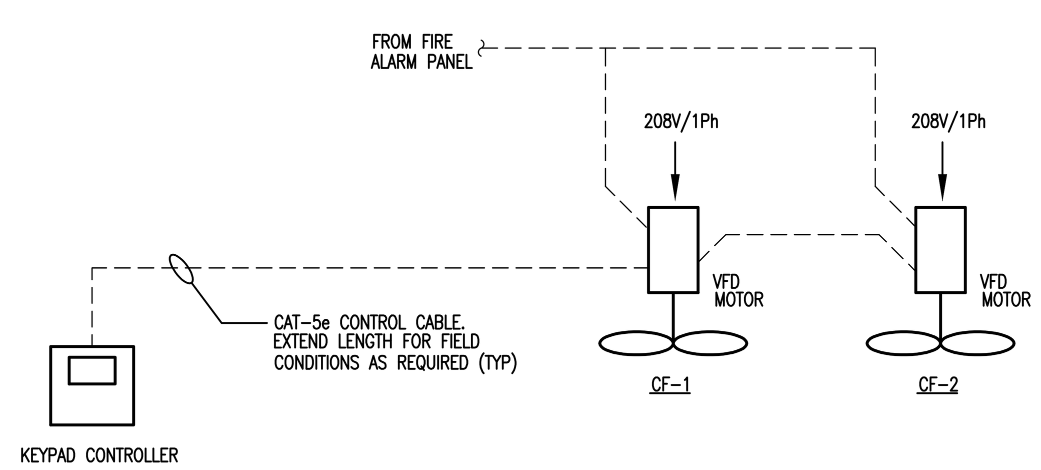

CEILING FAN CONTROL SCHEMATIC

NOT TO SCALE

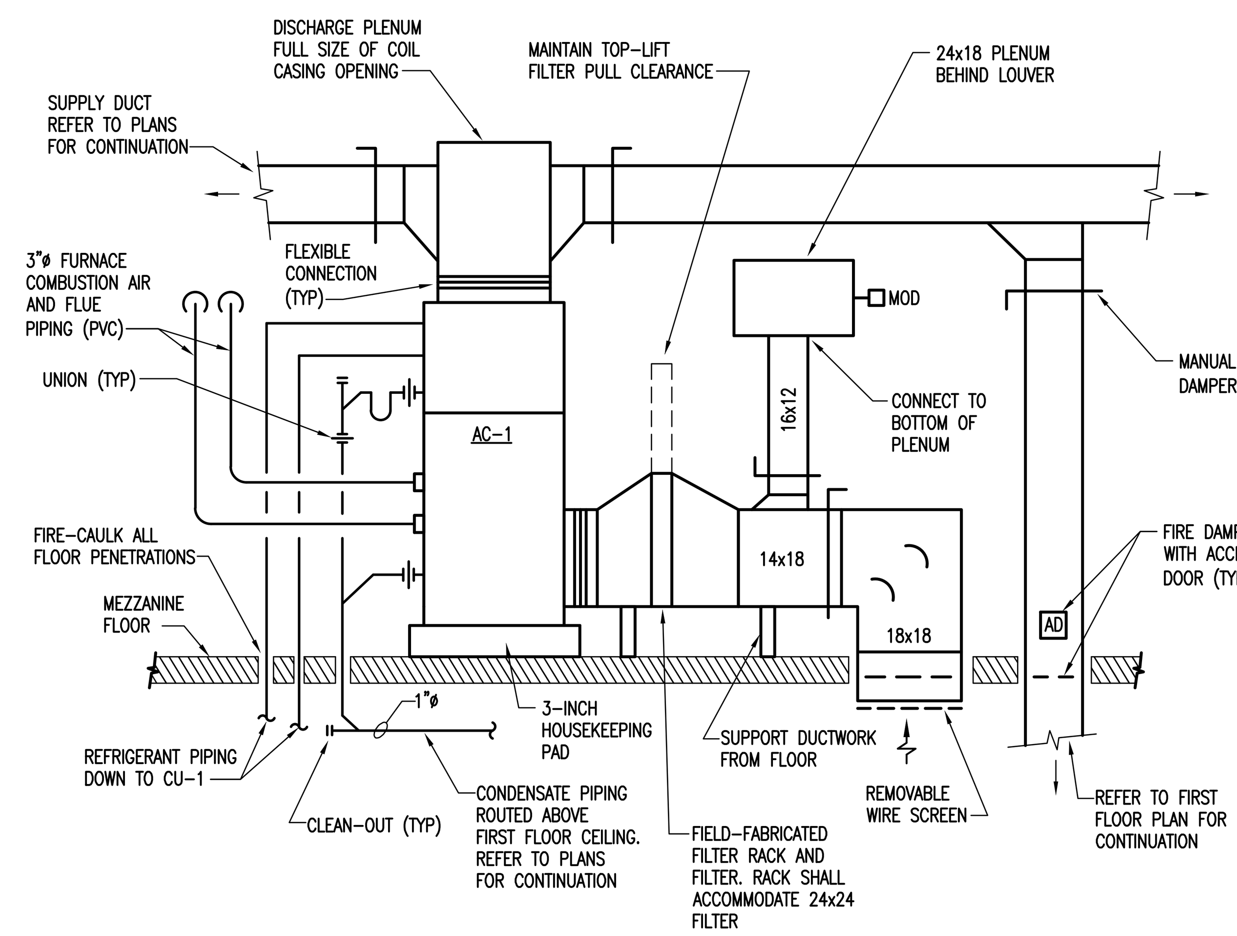

AC–1 INSTALLATION DETAIL – ELEVATION

NO SCALE

ISSUED FOR BID JULY 19, 2023

NOT FOR CONSTRUCTION

McCARTHY ENGINEERING ASSOCIATES, INC.
www.McCarthy-Engineering.com
2500 East High Street, Suite 630
Pottstown, PA 19464
Phone: 610.373.8001

Project No.
230004

Revision	Date	Description	Rev.By
1	8/9/2023	ADDENDUM 1	

This document and all information and work product represented by and contained herein, is the sole and exclusive property of McCarthy Engineering Associates, Inc. The information contained herein is licensed only for limited use by the intended recipient, and no license, permission or authority is extended, directly or implied, to any party without the express written permission of McCarthy Engineering Associates, Inc.
Copyright, 2017, McCarthy Engineering Associates, Inc. All rights reserved

McCARTHY ENGINEERING ASSOCIATES, INC.
555 Van Reed Road
Suite 2
Wyomissing, PA 19610
www.McCarthy-Engineering.com
Phone: 610.373.8001
2500 East High Street
Suite 630
Pottstown, PA 19464

SEAL:

MECHANICAL COVER SHEET

" PUBLIC WORKS FACILITY "

Client: WYOMISSING BOROUGH
Location: WYOMISSING BOROUGH, BERKS COUNTY, PENNSYLVANIA
Date: JULY 19, 2023

DRAWN BY:	PROJ. MANAGER:
SAS	NEC
PRINCIPAL:	SCALE:
JCM	AS NOTED

DRAWING NO.
M–0

PROJECT NO.
230004

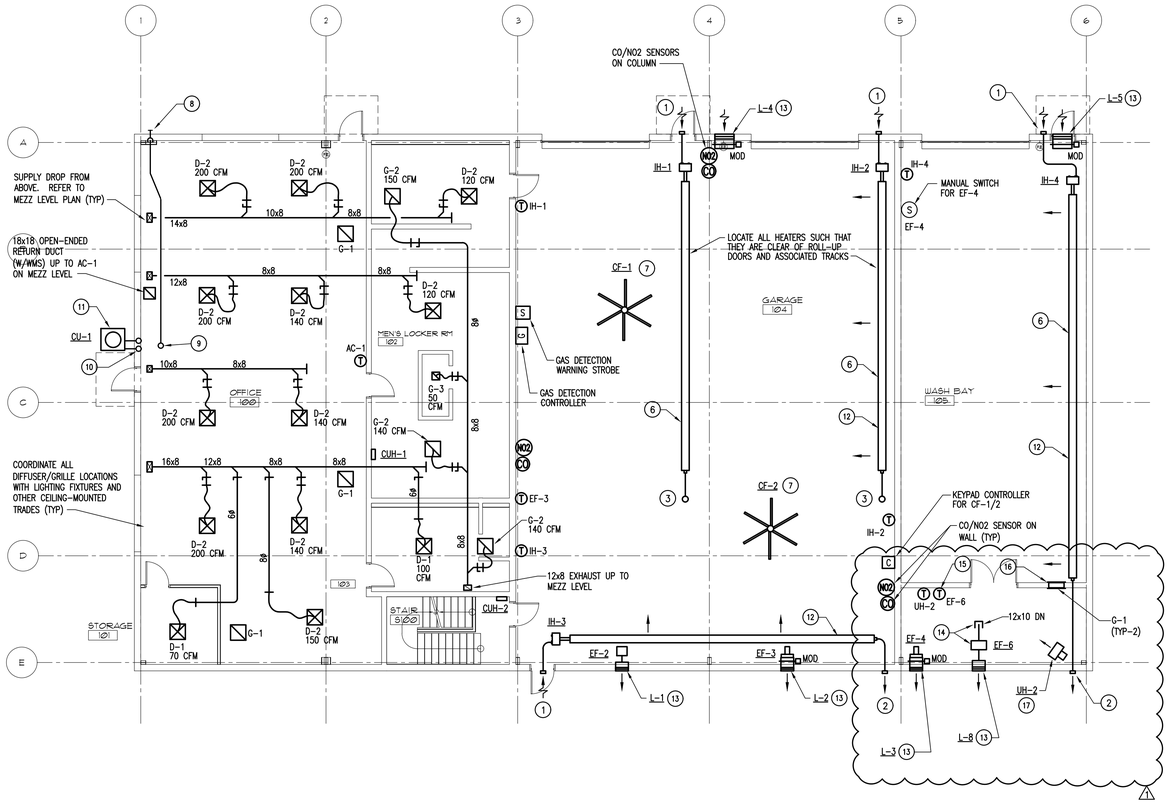

NEW BUILDING – FIRST FLOOR – MECHANICAL NEW WORK PLAN
SCALE: 1/8" = 1'-0"

NEW WORK NOTES:

1. FIELD LOCATE COMBUSTION AIR INTAKE. MAINTAIN MINIMUM 10'-0" CLEARANCE FROM ALL SOURCES OF EXHAUST. PROVIDE WITH FACTORY 4" SIDEWALL CAP FOR COMBUSTION AIR INTAKE.
2. FIELD LOCATE EXHAUST VENT. MAINTAIN MINIMUM 10'-0" CLEARANCE FROM ALL FRESH AIR AND COMBUSTION AIR INTAKES AND OPERABLE DOORS. PROVIDE WITH FACTORY 4" SIDEWALL VENT KIT.
3. FIELD LOCATE EXHAUST VENT UP THRU ROOF. MAINTAIN MINIMUM 10'-0" CLEARANCE FROM ALL FRESH AIR AND COMBUSTION AIR INTAKES AND OPERABLE DOORS. PROVIDE WITH FACTORY 4" ROOFTOP VENT PACKAGE, INCLUDING ROOF THIMBLE AND RAIN COLLAR. VENT SHALL TERMINATE A MINIMUM 3 FT ABOVE ROOF. PROVIDE ROOF THIMBLE, TERMINATION CAP, AND RAIN COLLAR.
4. PROVIDE LOUVER AT LOCATION SHOWN, MOUNTED AS HIGH AS POSSIBLE. PROVIDE PLENUM BEHIND LOUVER AS SHOWN WITH MOTORIZED DAMPER. INSULATE PLENUM WITH 1-INCH BOARD INSULATION. FOR INTAKE LOUVERS, SLOPE PLENUM AND ANY CONNECTED DUCTWORK TOWARD LOUVER.
5. EXTEND 3-INCH FURNACE COMBUSTION AIR AND FLUE VENTING THRU EXTERIOR WALL, TERMINATING WITH DOWN-TURNED ELBOWS HAVING BIRD SCREENS. SEAL WALL PENETRATION WATER-TIGHT.
6. INSTALL RADIANT HEATER SUCH THAT THERE IS A MINIMUM OF 18'-6" CLEAR ABOVE THE FLOOR FOR VEHICULAR TRAFFIC.
7. COORDINATE EXACT CEILING FAN LOCATION WITH LIGHTING FIXTURES AND FIRE PROTECTION SPRINKLERS.
8. EXTEND 1-INCH CONDENSATE FROM AC-1 DOWN WITHIN WALL CAVITY AND TERMINATE OUTSIDE 6 INCHES ABOVE GRADE. PROVIDE SPLASH BLOCK.
9. 1-INCH CONDENSATE DOWN FROM AC-1 ON MEZZANINE LEVEL. ROUTE PIPING HIGH WITHIN JOIST SPACE, PITCHED A MINIMUM 1/8-INCH PER FOOT.
10. ROUTE REFRIGERANT PIPING WITHIN WALL CAVITY UP TO AC-1 ON MEZZANINE LEVEL.
11. PROVIDE POURED-IN-PLACE CONCRETE PAD FOR CONDENSING UNIT. PAD SHALL BE 4 INCHES THICK WITH WELDED WIRE MESH REINFORCEMENT, ATOP 6 INCH CRUSHED STONE BED.
12. ORIENT HEAT REFLECTOR AT A 45-DEGREE ANGLE INWARD TOWARD SPACE.
13. PROVIDE LOUVER AT LOCATION SHOWN AS HIGH AS POSSIBLE. PROVIDE PLENUM BEHIND LOUVER AS SHOWN. FOR INTAKE PLENUMS, SLOPE PLENUM AND CONNECTED DUCTWORK TOWARD LOUVER. MAINTAIN A MINIMUM OF 10'-0" BETWEEN FRESH AIR INTAKES AND ALL SOURCES OF EXHAUST.
14. SUSPEND EF-6 ABOVE COMPRESSOR ROOM AT A HEIGHT SUFFICIENT TO DISCHARGE EXHAUST OUT REAR WALL. EXTEND 12x10 DUCT DOWN TO CEILING OF COMPRESSOR ROOM, AND TERMINATE WITH 16x16 INLET BOX/PLENUM AT CEILING WITH WIRE MESH SCREEN AT PLENUM INLET.
15. PROVIDE A LINE-VOLTAGE THERMOSTATIC SWITCH FOR CONTROL OF EF-6. SWITCH SHALL BE CLOSE-ON-RISE TYPE, EQUAL TO ROBERTSHAW MODEL 803A. ADJUST INITIAL TEMPERATURE SETPOINT TO 80F.
16. PROVIDE 24x24 TRANSFER GRILLE ON EACH SIDE OF WALL, WITH DUCT SLEEVE BETWEEN. INSTALL GRILLES 8 INCHES AFF.
17. SUSPEND UNIT HEATER WITHIN COMPRESSOR ROOM. LOCATE REMOTE THERMOSTAT ON WALL.

ISSUED FOR BID JULY 19, 2023
NOT FOR CONSTRUCTION

McCARTHY ENGINEERING ASSOCIATES, INC.
www.McCarthy-Engineering.com
2500 East High Street, Suite 630
Pottstown, PA 19464
Phone: 610.313.8001

Project No.
230004

Revision	Date	Description	Rev By
1	8/9/2023	ADDENDUM 1	

This document, and all information and work product represented by and contained herein, is the sole and exclusive property of McCarthy Engineering Associates, Inc. and is not to be used, reproduced, or distributed in any manner whatsoever without the express written consent of McCarthy Engineering Associates, Inc. Any unauthorized use, reproduction, or distribution by or through any person or entity, for any purpose, is prohibited by law, and will subject the violator to liability for all damages, including consequential damages, and attorney's fees. Copyright, 2023, McCarthy Engineering Associates, Inc. All rights reserved.

McCARTHY ENGINEERING ASSOCIATES, INC.
www.McCarthy-Engineering.com
Phone: 610.313.8001
2500 East High Street
Suite 630
Pottstown, PA 19464

595 Van Reed Road
Suite 2
Myerstown, PA 19610

SEAL:

MECHANICAL – NEW BUILDING FIRST FLOOR PLAN
" PUBLIC WORKS FACILITY "

Client: WYOMISSING BOROUGH
Location: WYOMISSING BOROUGH, BERKS COUNTY, PENNSYLVANIA
Date: JULY 19, 2023

DRAWN BY:	PROJ. MANAGER:
SAS	NEC
PRINCIPAL:	SCALE:
JCM	AS NOTED

DRAWING NO.
M-1

PROJECT NO.
230004

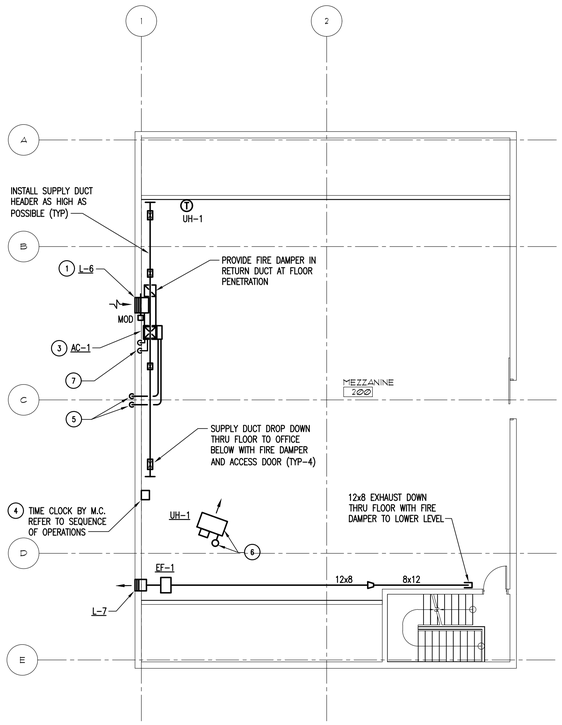

NEW BUILDING – MEZZANINE – MECHANICAL NEW WORK PLAN

SCALE: 1/8" = 1'-0"

NEW WORK NOTES:

1. PROVIDE LOUVER AT LOCATION SHOWN BELOW SUPPLY DUCTWORK. PROVIDE PLENUM BEHIND LOUVER AS SHOWN. SLOPE PLENUM AND CONNECTED DUCTWORK TOWARD LOUVER. MAINTAIN A MINIMUM OF 10'-0" BETWEEN FRESH AIR INTAKES AND ALL SOURCES OF EXHAUST.
2. INSULATE EXHAUST DUCTWORK AND LOUVER PLENUM BETWEEN FAN DISCHARGE AND LOUVER.
3. REFER TO AC INSTALLATION DETAIL.
4. PROVIDE TIME CLOCK FOR CONTROL OF AC-1 OA DAMPER AND EXHAUST FAN EF-1. TIMER SHALL BE INTERMATIC ELECTROMECHANICAL MODEL T7401B OR APPROVED EQUAL.
5. TERMINATE 3-INCH PVC FURNACE VENTING WITH DOWN-TURNED ELBOWS WITH STAINLESS STEEL BIRD SCREENS. INSTALL PER MANUFACTURER'S INSTRUCTIONS.
6. INSTALL UNIT HEATER AS HIGH AS POSSIBLE. PROVIDE FIELD-FURNISHED COMBUSTION AIR DUCTING FOR USE WITH MANUFACTURER'S CONCENTRIC THRU-THE-ROOF VENTING KIT. INSTALL PER MANUFACTURER'S INSTRUCTIONS.
7. REFRIGERANT PIPING FROM BELOW.

ISSUED FOR BID JULY 19, 2023
NOT FOR CONSTRUCTION

McCARTHY ENGINEERING ASSOCIATES, INC.
www.McCarthy-Engineering.com
2500 East High Street, Suite 630
Pottstown, PA 19464
Phone: 610.313.8001
Project No. 230004

Revision	Date	Description	Rev By
1	8/9/2023	ADDENDUM 1	

This document, and all information and work product represented by and contained herein, is the sole and exclusive property of McCarthy Engineering Associates, Inc. Any use of this document, and all information and work product represented by and contained herein, for any purpose is expressly prohibited except as authorized by McCarthy Engineering Associates, Inc. in writing. Any unauthorized use, reproduction or distribution of this document, and all information and work product represented by and contained herein, is strictly prohibited without the express written permission of McCarthy Engineering Associates, Inc. All rights reserved.
Copyright, 2023, McCarthy Engineering Associates, Inc.

McCARTHY ENGINEERING ASSOCIATES, INC.
www.McCarthy-Engineering.com
2500 East High Street, Suite 630, Pottstown, PA 19464, Phone: 610.313.8001
255 Van Reed Road, Suite 2, Myerstown, PA 19510

SEAL:

MECHANICAL – NEW BUILDING MEZZANINE PLAN
" PUBLIC WORKS FACILITY "

Client: WYOMISSING BOROUGH
Location: WYOMISSING BOROUGH, BERKS COUNTY, PENNSYLVANIA
Date: JULY 19, 2023

DRAWN BY:	PROJ. MANAGER:
SAS	NEC
PRINCIPAL:	SCALE:
JCM	AS NOTED

DRAWING NO.
M-2

PROJECT NO.
230004

McCARTHY
ENGINEERING ASSOCIATES, INC.
www.Mc-Carthy-Engineering.com
2500 East High Street, Suite 630
Pottstown, PA 19464
Phone: 610.313.8001

Project No.
230004

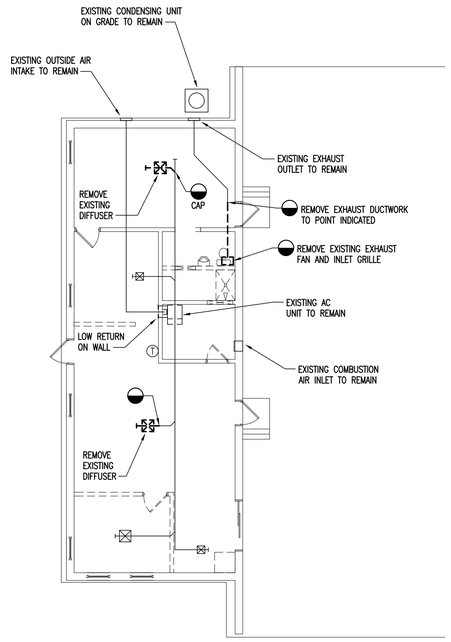

EXISTING BUILDING – MECHANICAL DEMOLITION PLAN
SCALE: 1/8" = 1'-0"

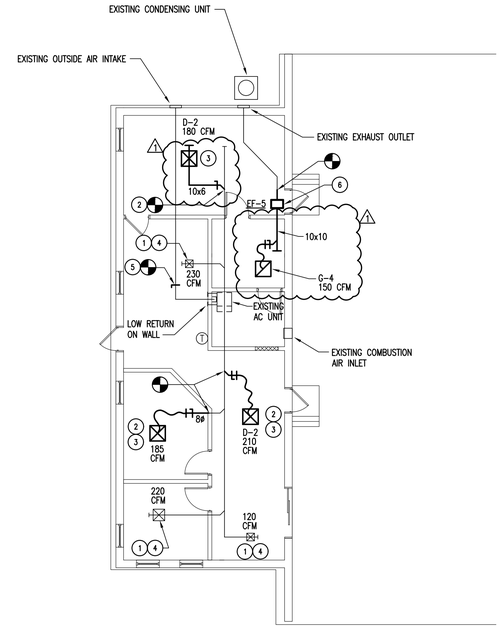

EXISTING BUILDING – MECHANICAL NEW WORK PLAN
SCALE: 1/8" = 1'-0"

NEW WORK NOTES:

1. RELOCATE EXISTING DIFFUSER INTO NEW CEILING. ADAPT DIFFUSER BRANCH AS REQUIRED.
2. PROVIDE NEW DIFFUSER AND DUCT BRANCH. CONNECT INTO EXISTING DUCT MAIN WHERE SHOWN.
3. BALANCE NEW DIFFUSER TO AIR FLOW INDICATED.
4. REBALANCE EXISTING DIFFUSER TO AIR FLOW INDICATED.
5. PROVIDE NEW BALANCING DAMPER IN EXISTING OUTSIDE AIR DUCT, AND BALANCE TO 90 CFM.
6. NEW EXHAUST FAN ABOVE CEILING. REFER TO IN-LINE FAN INSTALLATION DETAIL FOR SUSPENSION AND DUCT CONNECTION INFORMATION.

ISSUED FOR BID JULY 19, 2023
NOT FOR CONSTRUCTION

Revision	Date	Description	Rev By
1	8/9/2023	ADDENDUM 1	

This document, and all information and work product represented by and contained herein, is the sole and exclusive property of McCarthy Engineering Associates, Inc. and is not to be used, published, or disclosed to any person or entity without the express written consent of McCarthy Engineering Associates, Inc. and shall not be loaned, copied, or reproduced in any form, in whole or in part, or used for any other purpose or project by any party without the express written consent of McCarthy Engineering Associates, Inc. All rights reserved.
Copyright, 2023, McCarthy Engineering Associates, Inc.

McCARTHY
ENGINEERING ASSOCIATES, INC.
2500 East High Street
Suite 630
Pottstown, PA 19464
www.Mc-Carthy-Engineering.com
Phone: 610.313.8001

555 Van Reed Road
Suite 2
Wyomissing, PA 19610

SEAL:

MECHANICAL – EXG. BUILDING FLOOR PLANS
" PUBLIC WORKS FACILITY "

Client: WYOMISSING BOROUGH
Location: WYOMISSING BOROUGH, BERKS COUNTY, PENNSYLVANIA
Date: JULY 19, 2023

DRAWN BY:	PROJ. MANAGER:
SAS	NEC
PRINCIPAL:	SCALE:
JCM	AS NOTED

DRAWING NO.
M-3

PROJECT NO.
230004

AC UNIT SCHEDULE (INDOOR UNIT)

TAG	TYPE	TOTAL CFM	OA CFM	EXT. STATIC PRESS. (IN. W.G.)	COOLING COIL EAT (DB/WB)	COOLING COIL LAT (DB/WB) [LEAVING COIL]	HEATING (GAS FURNACE) # STAGES	HEATING (GAS FURNACE) EAT (°F)	HEATING (GAS FURNACE) MAX. HEATING INPUT (MBH)	HEATING (GAS FURNACE) MAX. HEATING OUTPUT (MBH)	FILTER	ELECTRICAL (FURNACE SECTION) MOTOR HP	ELECTRICAL (FURNACE SECTION) DRIVE	ELECTRICAL (FURNACE SECTION) V/Ph/Hz	ELECTRICAL (FURNACE SECTION) MOCP	BASIS OF DESIGN	NOTES
AC-1	VERTICAL DUCTED	1980	440	0.55	79.2/65.4	57.8/55.7	2	58	100	97	MERV 8	1.0	DIRECT	120/1/60	15A	TRANE S9X2C100U5PSBA	ALL

NOTES:
1. PROVIDE WITH MODEL 4TXCC009DS3 DIRECT-EXPANSION ACCESSORY COOLING COIL.
2. M.C. TO COORDINATE AND FIELD-CUT SIDE RETURN OPENING INTO SIDE OF UNIT PER MANUFACTURER'S INSTALLATION INSTRUCTIONS.
3. COOLING CAPACITIES INDICATED ARE AT A COINCIDENT OUTDOOR AMBIENT TEMPERATURE OF 95F.
4. PROVIDE WITH MANUFACTURER'S HARD-WIRED 7-DAY PROGRAMMABLE THERMOSTAT, WITH AUTO-CHANGE-OVER FEATURE AND BATTERY BACK-UP.

CONDENSING UNIT SCHEDULE (OUTDOOR UNIT)

TAG	TYPE	LOCATION	REFRIGERANT	NOMINAL CAPACITY (MBH)	FANS (QUANTITY)	COMPRESSORS (QUANTITY)	ELECTRICAL CHARACTERISTICS UNIT MCA	VOLTS	PHASE	HERTZ	MOCP	BASIS OF DESIGN	NOTES
CU-1	AIR-COOLED	GRADE	R410A	5.0	1	1	35.0	208-230	1	60	60A	TRANE MODEL 4TTR6060N1	ALL

NOTES:
1. PROVIDE ALL INTER-CONNECTING CONTROL WIRING BETWEEN INDOOR SECTION AND OUTDOOR CONDENSING UNIT.
2. PROVIDE ALL INTER-CONNECTING REFRIGERANT PIPING BETWEEN INDOOR UNIT AND OUTDOOR UNIT. FIELD-CHARGE REFRIGERANT LINES ACCORDING TO MANUFACTURER'S SPECIFICATIONS.
3. SIZE REFRIGERANT PIPING ACCORDING TO MANUFACTURER'S SPECIFICATIONS.

FAN SCHEDULE

REF NO	MANUFACTURER / MODEL NO.	LOCATION	FLOW (CFM)	SPEED (RPM)	STATIC EXT PRESS ("WG)	MOTOR (HP/WATTS)	DRIVE TYPE	V-Ph-Hz	TYPE	NOTES
EF-1	PENN-BARRY ZEPHYR MODEL Z10H	MEZZANINE	440	1550	0.55	390 W	DIRECT	120-1-60	CABINET CENTRIF.	1,3
EF-2	PENN-BARRY ZEPHYR MODEL Z8S	MAINTENANCE SHOP	175	1050	0.25	77 W	DIRECT	120-1-60	CABINET CENTRIF.	1,3
EF-3	PENN-BARRY BREEZEWAY MODEL P16RA	MAINTENANCE SHOP	2400	1550	0.25	1/2 HP	DIRECT	120-1-60	WALL PROPELLER	2
EF-4	PENN-BARRY BREEZEWAY MODEL P20SA	WASH BAY	2000	1300	0.30	1/3 HP	DIRECT	120-1-60	WALL PROPELLER	2
EF-5	PENN-BARRY ZEPHYR MODEL Z8S	EXISTING BUILDING	150	1050	0.375	77 W	DIRECT	120-1-60	CABINET CENTRIF.	1,3
EF-6	PENN-BARRY ZEPHYR MODEL Z10H	COMPRESSOR RM.	625	1550	0.25	390 W	DIRECT	120-1-60	CABINET CENTRIF.	1
CF-1,2	GREENHECK DS-6-8-70HV	MAINTENANCE SHOP	28,600	142	0.00	2/3 HP	DIRECT/VFD	208-1-60	CEILING FAN	4

1

NOTES:
1. PROVIDE WITH GRAVITY BACKDRAFT DAMPER. STATIC PRESSURE INDICATED DOES NOT REFLECT GRAVITY DAMPER.
2. PROVIDE WITH WALL SLEEVE AND MANUFACTURER'S FAN GUARD.
3. PROVIDE WITH MANUFACTURER'S SPEED CONTROLLER FOR BALANCING.
4. PROVIDE THE FOLLOWING FACTORY OPTIONS/ACCESSORIES: FACTORY-INTEGRAL VFD DRIVE, MILL FINISH, Z-PURLIN MOUNTING KIT, 6-FT DROP TUBE EXTENSION, IMPELLER HUB/PLATE, POWER WIRING PIGTAIL, NETWORK COMMUNICATION WIRING, 150FT OF TWISTED PAIR CAT-5e CONTROL CABLE, LOW-VOLTAGE FIRE ALARM INTERFACE RELAY, SAFETY CABLE, GUY WIRES, CABLE CLAMP HARDWARE, NEMA-3R TOGGLE SWITCH, IP40 KEYPAD (WALL-MOUNTED) TO CONTROL BOTH FANS.

GAS-FIRED UNIT HEATER SCHEDULE

REF NO	MANUFACTURER / MODEL NO.	LOCATION	NATURAL GAS BURNER INPUT (MBH)	OUTPUT (MBH)	MINIMUM INLET PRESS. (IN. W.G.)	MAXIMUM INLET PRESS. (IN. W.G.)	ELECTRICAL FLA	V-Ph-Hz	POWER CONNECTION	NOTES
UH-1	RE-VERBER-AIR / UH-45	MEZZANINE	45	36.0	5.0	14.0	2.7	120-1-60	HARD-WIRED	ALL

NOTES:
1. PROVIDE WITH MANUFACTURER'S STANDARD 24V THERMOSTAT AND INTEGRAL CONTROL TRANSFORMER.
2. PROVIDE WITH MANUFACTURER'S SUPPORT HANGERS/ANGLES.
3. PROVIDE WITH SEPARATED COMBUSTION, POWERED EXHAUST, THRU-THE-ROOF CONCENTRIC VENTING KIT WITH B-VENT AND RAIN CAP, AND VIBRATION ISOLATION KIT.

INFRARED HEATER SCHEDULE

REF NO	MANUFACTURER / MODEL NO.	LOCATION	OVERALL LENGTH (FT)	NATURAL GAS BURNER HIGH-FIRE INPUT (MBH)	MINIMUM INLET PRESS. (IN. W.G.)	MAXIMUM INLET PRESS. (IN. W.G.)	ELECTRICAL V-Ph-Hz	STARTING AMPS	RUNNING AMPS	POWER CONNECTION	NOTES
IH-1,2,3	RE-VERBER-RAY / HL3-40-75	MAINTENANCE SHOP	41'-1"	75	5.0	14.0	120-1-60	4.8	1.1	PLUG-AND-CORD	1,2,3,4
IH-4	RE-VERBER-RAY / HL3-50-150	WASH BAY	50'-9"	150	5.0	14.0	120-1-60	4.8	1.1	PLUG-AND-CORD	1,2,3,4,5

NOTES:
1. PROVIDE WITH MANUFACTURER'S STANDARD 24V THERMOSTAT.
2. PROVIDE WITH MANUFACTURER'S HANGERS, TUBE CLAMPS, AND CENTER SUPPORTS.
3. PROVIDE WITH MANUFACTURER'S REFLECTOR END CAPS.
4. PROVIDE WITH MANUFACTURER'S FLEXIBLE GAS CONNECTOR HOSE.
5. PROVIDE WITH ALUMINIZED STEEL TUBES, AND STAINLESS STEEL BURNER/BOX, HANGERS, AND REFLECTORS/CAPS.

ELECTRIC HEATER SCHEDULE

REF NO	TYPE	AIR FLOW (CFM)	CAPACITY (WATTS)	ELECTRICAL CHARACTERISTICS VOLTS	PHASE	HERTZ	BASIS OF DESIGN	NOTES
CUH-1,2	SURFACE-MOUNTED WALL HEATER	100	3000	208	1	60	BERKO MODEL CWH3404F	1
UH-2	SUSPENDED UNIT HEATER	350	3000	208	1	60	QMARK MODEL MUH0381	2

1

NOTES:
1. PROVIDE WITH SURFACE MOUNTING FRAME, INTEGRAL ON/OFF SWITCH, INTEGRAL THERMOSTAT, AND MANUAL RESET THERMAL OVERHEAT PROTECTOR.
2. PROVIDE WITH WALL MOUNTING BRACKET AND REMOTE-MOUNTED THERMOSTAT CONTROL.

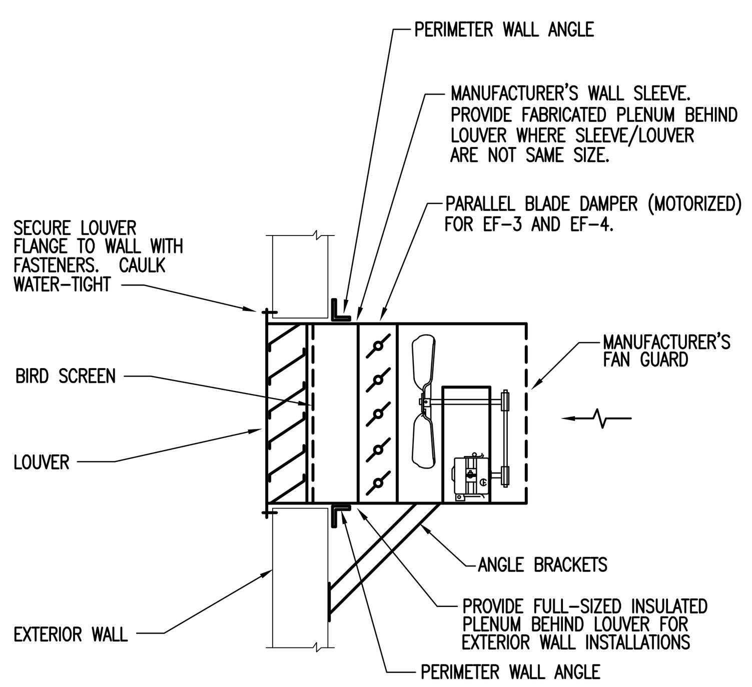

TYPICAL PROPELLER EXHAUST FAN DETAIL
NO SCALE

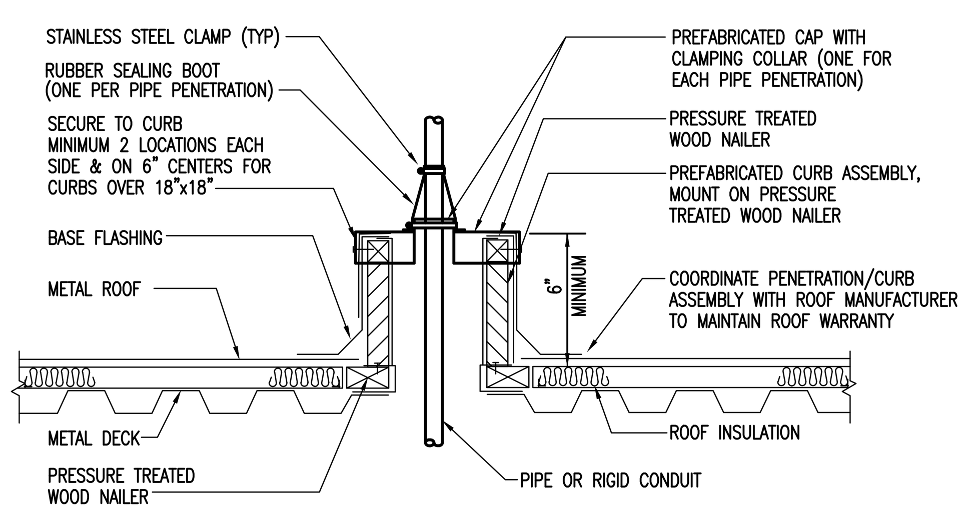

NOTES:
1. PIPE CAP ASSEMBLY SHALL BE A PREFABRICATED ASSEMBLY CONSTRUCTED FOR ONE OR MULTIPLE PIPE PENETRATIONS.
2. PIPE CURB ASSEMBLY SHALL BE PATE MODEL 'PCA' SERIES OR EQUAL.

TYPICAL PIPE OR CONDUIT ROOF PENETRATION DETAIL
NO SCALE

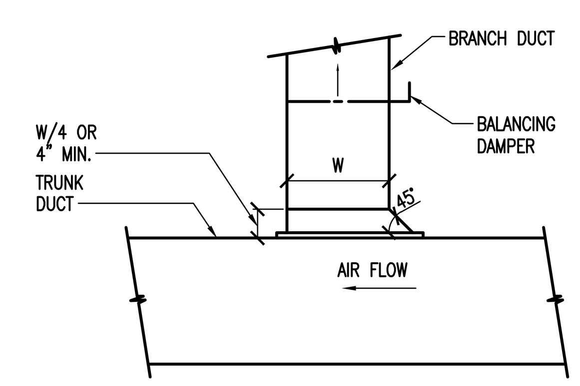

TYPICAL BRANCH DUCT – 45° ENTRY
NO SCALE

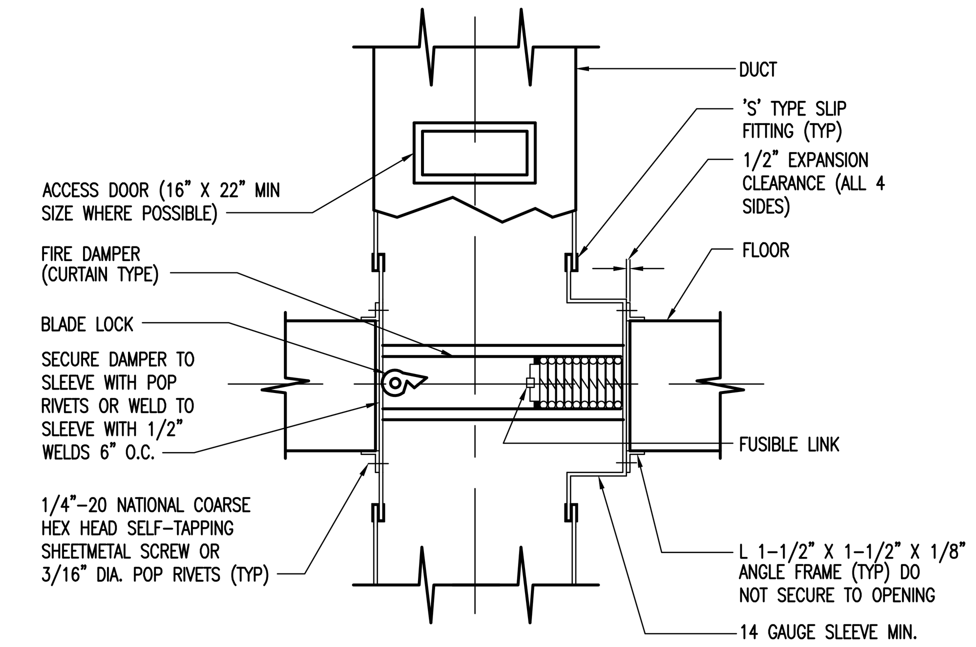

TYPICAL HORIZONTAL FIRE DAMPER DETAIL
NO SCALE

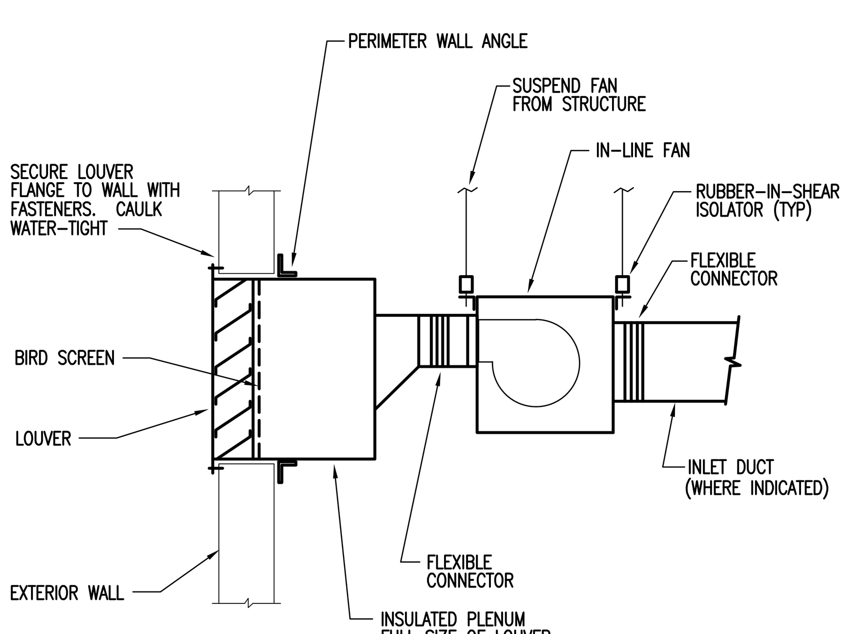

TYPICAL IN-LINE FAN DETAIL
NO SCALE

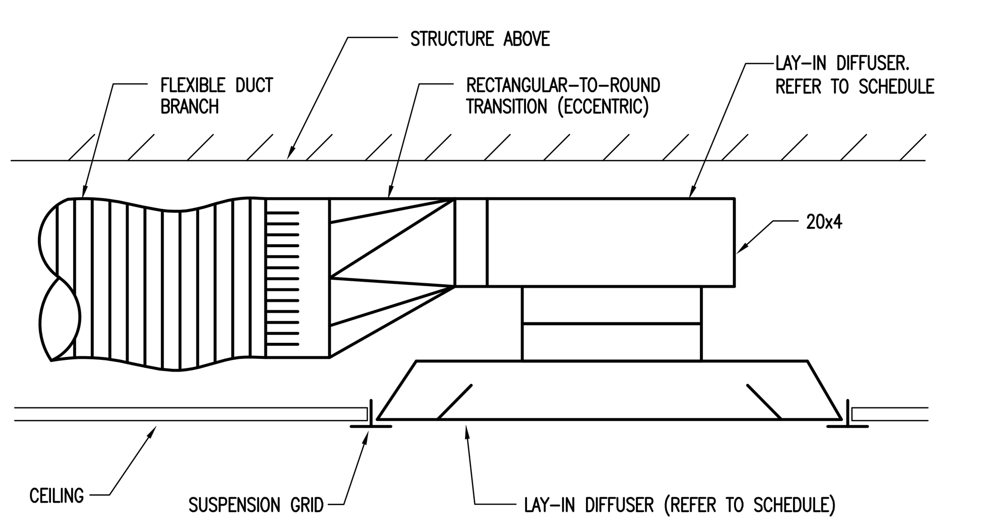

CONFINED SPACE DIFFUSER INSTALLATION DETAIL
NO SCALE

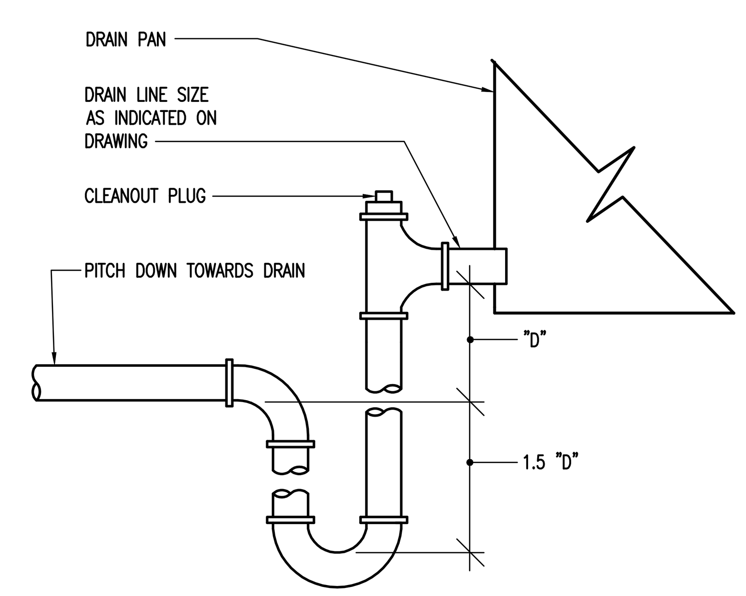

NOTE: D= TOTAL FAN STATIC PRESSURE, INCHES OF WATER

TYPICAL CONDENSATE DRAIN PAN TRAP DETAIL
NO SCALE

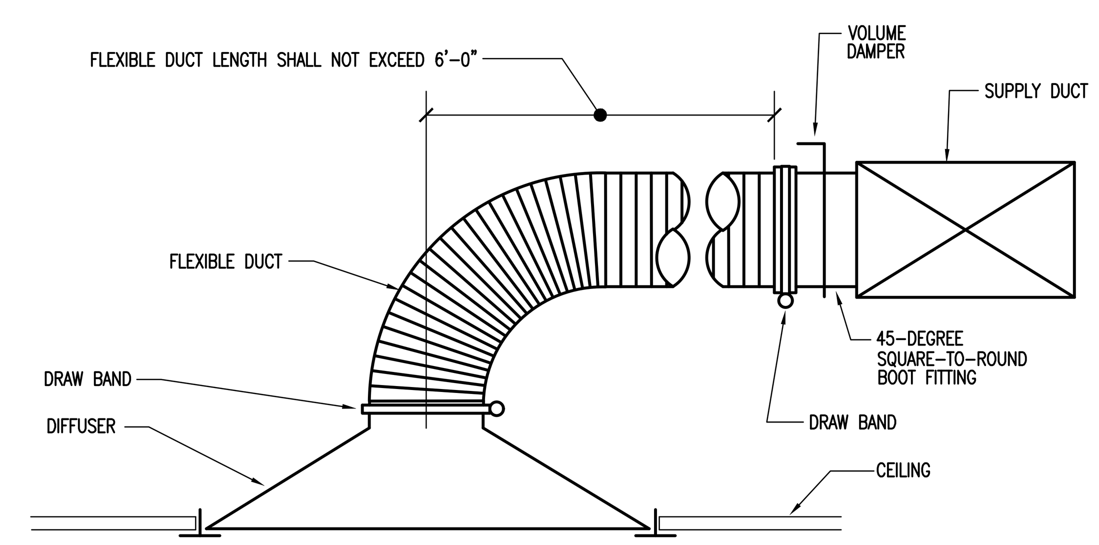

DIFFUSER INSTALLATION DETAIL
NO SCALE

ISSUED FOR BID JULY 19, 2023
NOT FOR CONSTRUCTION

McCARTHY ENGINEERING ASSOCIATES, INC.
www.McCarthy-Engineering.com
2500 East High Street, Suite 630
Pottstown, PA 19464
Phone: 610.373.8001

Project No.
230004

Revision	Date	Description	Rev.By
1	8/9/2023	ADDENDUM 1	

This document and all information and work product represented by and contained herein, is the sole and exclusive property of McCarthy Engineering Associates, Inc. The information contained herein is licensed only for limited use by the intended recipient, and no license, permission or authority is extended, directly or implied, to any party without the express written permission of McCarthy Engineering Associates, Inc.
Copyright, 2017, McCarthy Engineering Associates, Inc. All rights reserved

McCARTHY ENGINEERING ASSOCIATES, INC.
www.McCarthy-Engineering.com
Phone: 610.373.8001
555 Van Reed Road
Suite 2
Wyomissing, PA 19610
2500 East High Street
Suite 630
Pottstown, PA 19464

SEAL:

MECHANICAL
SCHEDULES AND DETAILS
"PUBLIC WORKS FACILITY"

Client: WYOMISSING BOROUGH
Location: WYOMISSING BOROUGH, BERKS COUNTY, PENNSYLVANIA
Date: JULY 19, 2023

DRAWN BY: SAS	PROJ. MANAGER: NEC
PRINCIPAL: JCM	SCALE: AS NOTED
DRAWING NO. M-4	
PROJECT NO. 230004	

HEATING, VENTILATING, AND AIR CONDITIONING SPECIFICATIONS

1.1 THE ARCHITECTURAL GENERAL CONDITIONS SHALL APPLY TO AND FORM A PART OF THIS SECTION OF THESE SPECIFICATIONS.

1.2 PROVIDE ALL MATERIALS, LABOR, EQUIPMENT AND TOOLS NECESSARY FOR COMPLETE AND WORKABLE SYSTEMS AS INDICATED ON THE DRAWINGS. ALL WORK SHALL BE IN ACCORDANCE WITH ALL APPLICABLE SECTIONS OF THE NATIONAL FIRE PROTECTION ASSOCIATION, NATIONAL ELECTRICAL CODE, OSHA, LATEST INTERNATIONAL MECHANICAL CODE, AND ALL OTHER LOCAL OR STATE AUTHORITIES HAVING JURISDICTION AND MANUFACTURER'S RECOMMENDATIONS.

1.3 THE CONTRACTOR SHALL VISIT THE SITE, EXAMINE ALL CONDITIONS AND MAKE ALLOWANCES FOR DIFFICULTIES AND CONTINGENCIES AFFECTING THE PROPER EXECUTION OF THIS CONTRACT PRIOR TO SUBMITTING A PROPOSAL.

1.4 THE CONTRACTOR SHALL OBTAIN AND PAY ALL FEES NECESSARY FOR PERMITS AND INSPECTIONS REQUIRED WITH THIS WORK.

1.5 THE CONTRACTOR SHALL VERIFY ALL UTILITY SERVICE INFORMATION SHOWN ON THE DRAWINGS WITH THE LOCAL UTILITY COMPANY PRIOR TO SUBMITTING A BID. ANY CHANGES OR SERVICE CHARGES IMPOSED BY THE UTILITY COMPANY SHALL BE QUALIFIED AND INCLUDED IN THE BID.

1.6 ALL EQUIPMENT SHALL BE TESTED, LISTED, AND LABELED BY AN APPROVED AUTHORITY (UL, AGA, ETL) AND SHALL BE INSTALLED IN ACCORDANCE WITH ITS LISTING.

1.7 ALL EQUIPMENT, MATERIALS AND WORKMANSHIP SHALL BE GUARANTEED FOR A MINIMUM OF ONE YEAR (FIVE YEARS FOR ALL COMPRESSORS) FROM THE DATE OF ACCEPTANCE BY THE OWNER.

1.8 WHERE PRODUCTS ARE SPECIFIED BY BRAND NAME, CATALOG NUMBERS OR BY NAMES OF MANUFACTURERS, THE REFERENCE IS INTENDED TO BE DESCRIPTIVE AND NOT RESTRICTIVE AND IS SOLELY FOR THE PURPOSE OF INDICATING THE TYPE OF QUALITY OF ITEM THAT WILL BE ACCEPTABLE. AN APPROVED EQUAL WILL BE CONSIDERED UNLESS INDICATED OTHERWISE.

1.9 SHOP DRAWINGS SHALL BE SUBMITTED AND REVIEWED PRIOR TO ORDERING ANY EQUIPMENT.

1.10 SUBSTITUTIONS FOR SPECIFIED EQUIPMENT ARE PERMITTED UNDER THE CONDITIONS THAT NO ADDITIONAL CHARGE TO THE PROJECT BE PERMITTED FOR ASSOCIATED CHANGES IN POWER REQUIREMENTS, PIPE/DUCT SIZE, GAS CONSUMPTION, WEIGHT, SUPPORT, ETC. THE CONTRACTOR SHALL FULLY REVIEW THE PROPOSED SUBSTITUTION TO ENSURE ALL ASPECTS OF PERFORMANCE, SERVICE CLEARANCE, PHYSICAL SUPPORT, POWER FEEDS, ETC. ARE COORDINATED AND ACCOUNTED FOR PRIOR TO SUBMITTING THE ALTERNATIVE EQUIPMENT FOR REVIEW.

1.11 THE CONTRACTOR RESPONSIBLE FOR WORK COVERED BY THESE SPECIFICATIONS SHALL COORDINATE AND COOPERATE WITH ALL OTHER TRADES.

1.12 ALL CUTTING AND PATCHING OF EVERY NATURE REQUIRED IN CONNECTION WITH THIS CONTRACT SHALL BE DONE BY THIS CONTRACTOR WITH MECHANICS EXPERIENCED IN THEIR RESPECTIVE TRADES. ALL PATCHING SHALL MATCH ADJACENT FINISHES/CONSTRUCTION.

1.13 THE CONTRACTOR SHALL CONTACT PENNSYLVANIA ONE CALL SYSTEM, INC. AT 1-800-242-1776 FOR COORDINATION OF POSSIBLE INTERFERENCES WITH UNDERGROUND UTILITIES PRIOR TO ANY EXCAVATION.

1.14 CONTRACTOR SHALL ENGAGE THE SERVICES OF A FIRE PROTECTION CONTRACTOR TO REVIEW THE DRAWINGS AND INSTALL FIRE PROTECTION PRODUCTS TO MAINTAIN THE INTEGRITY OF ALL PIPE, WIRE, CONDUIT, DUCT, DIFFUSER, REGISTER, GRILLE, ETC. PENETRATIONS THROUGH ANY AND ALL FIRE RATED WALLS, FLOORS, BARRIERS, AND ASSEMBLIES. FIRE STOP TRAINING AND PRODUCTS SHALL BE 3M OR APPROVED EQUAL.

1.15 ALL EXCAVATIONS REQUIRED FOR INSTALLATION OF PIPE SHALL HAVE SOLID, UNDISTURBED BOTTOMS AND SHALL BE SUBJECT TO APPROVAL BY THE ARCHITECT PRIOR TO PIPING PLACEMENT. SHOULD BOTTOMS BECOME SOFT OR WET BEFORE PIPING IS PLACED, ALL SUCH UNSUITABLE BOTTOMS SHALL BE REMOVED AT NO COST TO THE OWNER AND FILLED WITH CONCRETE.

1.16 BACKFILL ALL EXCAVATIONS PERFORMED UNDER THIS CONTRACT AS REQUIRED TO SATISFY FINISHED GRADE REQUIREMENTS.

1.17 THE CONTRACTOR SHALL FURNISH AND INSTALL ALL NECESSARY HANGERS, INSERTS, SUPPORTS SUPPLEMENTARY STEEL, ETC., TO PROPERLY SUPPORT ALL EQUIPMENT, DUCTWORK AND PIPING IN AN APPROVED MANNER AND IN FULL ACCORDANCE WITH THE MANUFACTURER'S RECOMMENDATIONS.

1.18 DEMOLITION

A. THE CONTRACTOR SHALL PERFORM ALL DEMOLITION WORK AS INDICATED ON THE DRAWINGS AND AS DESCRIBED BELOW AS PART OF THIS CONTRACT. THE CONTRACTOR SHALL CUT AND PATCH AS REQUIRED TO PERFORM THE DEMOLITION WORK. ALL OPENINGS CREATED SHALL BE REPAIRED TO MATCH EXISTING CONDITIONS.

1.19 SLEEVES
PROVIDE SLEEVES FOR ALL PIPING PENETRATIONS OF WALLS AND FLOORS.

1.20 VIBRATION ISOLATORS FOR THE HVAC EQUIPMENT SHALL BE INSTALLED TO PROPERLY ISOLATE THE TRANSMISSION OF VIBRATION OR NOISE TO ANY PART OF THE BUILDING. ISOLATORS SHALL INCLUDE FLEXIBLE DUCT CONNECTORS WHERE DUCTWORK CONNECTS TO EQUIPMENT CONTAINING ROTATING PARTS, RUBBER/NEOPRENE ISOLATORS AT EQUIPMENT SUPPORTS, FLEXIBLE PIPE CONNECTORS AT CONNECTION TO TERMINAL EQUIPMENT CONTAINING ROTATING PARTS, ETC.

1.21 FIRE STOPPING

A. THE CONTRACTOR SHALL BE RESPONSIBLE TO PROVIDE AND INSTALL FIRE-STOPPING MATERIALS AND/OR SYSTEMS WHERE HIS WORK PENETRATES FIRE AND/OR SMOKE RATED PORTIONS OF THE BUILDING. ALL MATERIALS USED SHALL BE MANUFACTURED SUCH THAT THEY ARE INTENDED TO RESIST THE SPREAD OF FIRE AND THE PASSAGE OF SMOKE. THIS INCLUDES BUT IS NOT LIMITED TO RATED WALLS, FLOORS, SHAFTS, AND CEILINGS. ALL FIRE STOPPING MATERIALS USED SHALL HAVE A FIRE RESISTANCE RATING EQUAL TO OR GREATER THAN THE RATED ASSEMBLY FOR WHICH THEY ARE INSTALLED.

1.22 DUCTWORK AND GAS APPLIANCE VENTS

A. DUCTWORK SHALL BE GALVANIZED STEEL DESIGNED FOR 2 INCH PRESSURE CLASS FOR SUPPLY AND RETURN SYSTEMS AND 1 INCH FOR EXHAUST SYSTEMS IN ACCORDANCE WITH SMACNA. ALL ELBOWS SHALL BE PROVIDED WITH SINGLE THICKNESS TURNING VANES OR LONG RADIUS ELBOWS. ALL SUPPLY AND OUTSIDE AIR DUCTWORK (AND INTAKE PLENUMS BEHIND LOUVERS) SHALL BE INSULATED WITH 1-1/2 INCH DUCT WRAP OR RIGID DUCT BOARD WITH A MINIMUM INSTALLED R-VALUE OF SIX (6) IN UNCONDITIONED AND/OR CONCEALED SPACES. ALL OUTSIDE AIR DUCTWORK, AND RETURN PLENUM/DUCTWORK, SHALL BE INSULATED FROM THE POINT OF CONNECTION OF OA DUCTWORK TO THE RETURN SYSTEM, UP TO THE POINT OF CONNECTION TO THE UNIT/AIR HANDLER. EXHAUST DUCTWORK AND EXHAUST LOUVER PLENUMS SHALL BE INSULATED BETWEEN THE EXHAUST FAN DISCHARGE AND THE LOUVER. INSULATION SHALL BE JOHNS MANVILLE DUCT WRAP. INSULATION SHALL BE INSTALLED WITH THE APPROPRIATE THICKNESS AND LAYERS IN ORDER TO ACHIEVE THE AFOREMENTIONED R-VALUES. ALL DUCTS SHALL BE SEALED WITH A DUCT SEALER SUCH AS HARDCAST.

B. FLEXIBLE DUCTWORK SHALL BE UL 181 CLASS 1 COMPLETE WITH AN INSULATING FIBERGLASS BLANKET, FOIL-FACED VAPOR BARRIER AND DESIGNED TO WITHSTAND PRESSURES UP TO SIX INCHES POSITIVE PRESSURE W.G. DUCTWORK SHALL BE LABELED AS "FLEXIBLE DUCT". FLEXIBLE DUCT RUNS SHALL BE A MAXIMUM OF 10 FEET IN LENGTH AND SHALL BE TYPE 5M-INSULATED AS MANUFACTURED BY FLEXMASTER USA, INC. WITH A MINIMUM R-VALUE OF SIX (6).

C. VENT AND COMBUSTION PIPING FOR HIGH- EFFICIENCY (CATEGORY IV) CONDENSING TYPE GAS-FIRED FURNACE SHALL BE SCHEDULE 40 PVC, ASTM D1785. VENT SHALL BE COMPLETE WITH MANUFACTURER'S CONCENTRIC TERMINATION OR SEPARATE INTAKE/EXHAUST PER MANUFACTURER'S INSTRUCTIONS. INTAKE AND GAS VENTS SHALL BE SIZED AND INSTALLED IN ACCORDANCE WITH THE MANUFACTURER'S RECOMMENDATIONS AND ALL GOVERNING CODES INCLUDING NFPA 54.

D. VENTING FOR GAS-FIRED INFRARED HEATERS SHALL BE SINGLE-WALL, GAS-TIGHT (POSITIVE PRESSURE RATED) 4-INCH PIPING, WITH OVERLAPPING/CLAMPED CONNECTIONS, OF AL29-4C CONSTRUCTION, EQUAL TO 'FASNSEAL'. WHERE COMBUSTION VENTING PENETRATES A BUILDING WALL/ROOF ASSEMBLY, SUCH VENTING SHALL BE DOUBLE WALL TYPE "B" GAS VENT AS MANUFACTURED BY SELKIRK METALBESTOS OR APPROVED EQUAL WITH TYPE 430 STAINLESS STEEL INNER LINER AND ALUMINIZED STEEL OUTER JACKET. VENT SHALL BE COMPLETE WITH VENTILATED ROOF/WALL THIMBLE, WEATHER HOOD FLASHING AND BIRD PROOF VENT CAP. GAS VENT SHALL BE INSTALLED IN ACCORDANCE WITH THE MANUFACTURER'S RECOMMENDATIONS AND ALL GOVERNING CODE REQUIREMENTS, INCLUDING NFPA 54.

E. CONTROL DAMPERS SHALL BE INSULATED AIRFOIL TYPE WITH NEOPRENE EDGE SEALS, CLASS 1A, EQUAL TO RUSKIN MODEL TED50. DAMPER ACTUATORS SHALL BE TWO-POSITION, POWER-OPEN, SPRING-CLOSE, 120V, BY BELIMO MODEL TFB120 OR APPROVED EQUAL.

1.23 FIRE DAMPERS SHALL BE AS MANUFACTURED BY AIR BALANCE INC. OR APPROVED EQUAL. FIRE DAMPERS SHALL BE INSTALLED WHERE SHOWN ON THE DRAWINGS, SHALL PROVIDE THE REQUIRED FIRE SEPARATION AND SHALL BE INSTALLED IN ACCORDANCE WITH UL REQUIREMENTS.

1.24 GAS-FIRED FURNACES

A. GAS-FIRED FURNACES SHALL BE CONDENSING HIGH EFFICIENCY TYPE (CAT IV), WITH A MINIMAL THEMRAL EFFICIENCY FO 91% AFUE, AGA CERTIFIED, AND SHALL BE COMPLETE WITH ELECTRONIC IGNITION, REDUNDANT GAS VALVE, GAS CONTROLS (2 FIRING STAGES), FLUE OUTLET, BURNER BLOWER, INTERNAL SAFTIES, AND FIELD-FURNISHED ILTERS (MERV 8). FURNACE SHALL HAVE CAPACITY INDICATED ON THE DRAWINGS AND SHALL BE INSTALLED IN ACCORDANCE WITH THE MANUFACTURER'S RECOMMENDATIONS. GAS FURNACES SHALL BE BY TRANE, OR APPROVED EQUAL.

1.25 COOLING COIL AND CONDENSING UNIT

A. COOLING COIL AND ASSOCIATED AIR-COOLED CONDENSING UNIT SHALL BE MATCHED COMPONENTS WITH COMBINATION CAPACITIES AS INDICATED ON THE DRAWINGS. COOLING COIL SHALL BE ENCASED WITH INTERNAL DRAIN PAN AND EXTERNAL REFRIGERANT LINE AND CONDENSATE DRAIN CONNECTIONS. COILS SHALL BE RIGIDLY SUPPORTED IN ACCORDANCE WITH THE MANUFACTURER'S RECOMMENDATIONS, AND BE COMPATIBLE WITH THE FURNACE SECTION TO WHICH THEY ARE ATTACHED. AIR-COOLED CONDENSING UNIT SHALL BE UL LISTED AND ARI CERTIFIED AND SHALL BE COMPLETE WITH SCROLL COMPRESSOR, PROPELLER CONDENSING FAN, FILTER DRIER, AND LIQUID LINE SOLENOID VALVE.

1.26 ELECTRIC WALL HEATERS

A. WALL HEATERS SHALL BE SELF-CONTAINED, UL-LISTED ASSEMBLIES FURNISHED WITH BLOWER FAN, ELECTRIC-RESISTANCE HEATING ELEMENT(S), INTEGRAL DISCONNECT, CONTROL TRANSFORMER, AND INTEGRAL THERMOSTAT. HEATING ELEMENTS SHALL BE 80/20 NICKEL/CHROME, RATED FOR THE VOLTAGE INDICATED. HEATERS SHALL BE SUITABLE FOR SURFACE-MOUNTING ON WALL.

1.27 INFRARED TUBE HEATERS

A. PROVIDE DETROIT RADIANT PRODUCTS COMPANY: RE-VERBER-RAY HL3 SERIES. BURNER SHALL BE DESIGNED FOR NATURAL GAS HAVING CHARACTERISTICS SAME AS THOSE OF GAS AVAILABLE AT PROJECT SITE. OPERATION SHALL INCLUDE A DEFINED INPUT DIFFERENTIAL. HEATER MUST BE UL/NFPA 54 DESIGN CERTIFIED TO OPERATE AT AN INPUT DIFFERENTIAL OF AT LEAST 30% BETWEEN THE LOW AND NOMINAL RATED INPUT MODES. COMBUSTION CHAMBER SHALL BE 4 INCH O.D. 16 GA. TITANIUM STABILIZED ALUMINIZED STEEL (150-200MBH TO ALLOW FOR THE OPERATING TEMPERATURE TO EXCEED THE 1030F AS SET FORTH IN THE ANSI Z83.20 STANDARD) OR ALUMINIZED STEEL (BELOW 150 MBH), FINISHED WITH A HIGH EMISSIVITY RATED, CORROSION RESISTANT, BLACK COATING WITH AN EMISSIVITY LEVEL DOCUMENTED AT .92 OR HIGHER. EMITTER TUBE SHALL BE 4 INCH O.D. 16 GA. ALUMINIZED STEEL FINISHED WITH A HIGH EMISSIVITY RATED, CORROSION RESISTANT, BLACK COATING WITH AN EMISSIVITY LEVEL DOCUMENTED AT .92 OR HIGHER. BURNER SHALL BE A POSITIVE PRESSURE POWER BURNER WITH A COMBUSTION FAN UPSTREAM OF THE BURNER AND EXHAUST GASES FOR COMPONENT LONGEVITY, MAXIMUM COMBUSTION EFFICIENCY, AND ENERGY TRANSFER. NEGATIVE PRESSURE (PULL THROUGH) TYPE APPLIANCES WILL NOT BE ALLOWED. FAN ENCLOSURE: COMBUSTION FAN SHALL BE TOTALLY HOUSED INSIDE BURNER CONTROL BOX AND NOT EXPOSED. APPLIANCES WITH EXPOSED COMBUSTION/EXHAUSTER FANS SHALL NOT BE PERMITTED. BURNER SHALL BE STAINLESS-STEEL VENTURI TYPE. THE FLAME ANCHORING SCREEN SHALL HAVE A MINIMUM TEMPERATURE RATING EQUIVALENT TO 304 GRADE STAINLESS STEEL. NON STAINLESS STEEL BURNERS SHALL NOT BE PERMITTED. THE HEATER'S COMBUSTION CHAMBER AND RADIANT EMITTER TUBE SHALL INCORPORATE A 4-INCH SLIP-FIT, INTERLOCKING CONNECTION IN WHICH THE UPSTREAM TUBE SLIDES INTO THE NEXT TUBE AND IS HELD BY A BOLTED CLAMP. A BUTTED TUBE CONNECTION SYSTEM SHALL NOT BE PERMITTED. IGNITION SYSTEM: HOT SURFACE SILICON CARBIDE CAPABLE OF TEMPERATURES ACHIEVING 2400 F; IGNITOR SHALL BE READILY ACCESSIBLE AND SERVICEABLE WITHOUT THE USE OF TOOLS. SPARK IGNITION SYSTEMS SHALL NOT BE PERMITTED.

B. REFLECTORS: SHALL BE .025 POLISHED ALUMINUM WITH A MULTI-FACETED DESIGN WHICH INCLUDES REFLECTOR END CAPS. REFLECTOR SHALL HAVE A POLISHED BRIGHT FINISH WITH CLEAR VISUAL REFLECTION ABILITY. REFLECTOR SHALL HAVE A MINIMUM OF 7 SHEET METAL BENDS IN ITS FABRICATION TO OPTIMIZE DOWNWARD RADIATION. REFLECTORS SHALL BE ROTATABLE FROM 0 TO 45 DEGREES WHEN REQUIRED. THE HEATER'S REFLECTOR HANGING SYSTEM SHALL BE DESIGNED TO PERMIT EXPANSION WHILE MINIMIZING NOISE AND/OR RATTLES. REFLECTOR FOR WASH BAY AREA SHALL BE 304 STAINLESS STEEL.

C. CONTROL BOX: HEATER'S EXTERIOR CONTROL CHASSIS SHALL BE CONSTRUCTED OF CORROSION RESISTANT ENAMELED STEEL. THE HEATER'S TOP COVER SHALL BE CONSTRUCTED OF ABS PLASTIC MATERIAL. AN AIR INTAKE COLLAR SHALL BE SUPPLIED AS PART OF THE BURNER CONTROL ASSEMBLY TO ACCEPT A 4 INCH O.D. SUPPLY DUCT. THE HEATER'S CONTROL COMPARTMENT SHALL BE ACCESSIBLE WITHOUT THE USE OF TOOLS AND SERVICEABLE WHILE HEATER IS OPERATING. CONTROL BOX FOR WASH BAY AREA SHALL BE 304 STAINLESS STEEL.

D. HEATERS SHALL BE EQUIPPED WITH A SIGHT GLASS ALLOWING A VISUAL INSPECTION OF IGNITOR AND BURNER OPERATION FROM THE FLOOR. SIGHT GLASS VISIBLE ONLY AT AN APPLIANCE LEVEL SHALL NOT BE PERMITTED. THE HEATERS SHALL USE A DOWNSTREAM TURBULATOR BAFFLE FOR MAXIMUM HEAT TRANSFER. HEATER SHALL BE SUPPLIED WITH A STAINLESS STEEL FLEXIBLE GAS CONNECTOR.

E. BURNER SAFETY CONTROLS: HEATER CONTROLS SHALL INCLUDE A SAFETY DIFFERENTIAL PRESSURE SWITCH TO MONITOR COMBUSTION AIR FLOW, AS TO PROVIDE COMPLETE BURNER SHUTDOWN DUE TO INSUFFICIENT COMBUSTION AIR OR FLUE BLOCKAGE. THE HEATER SHALL INCORPORATE A SELF-DIAGNOSTIC IGNITION MODULE, AND RECYCLE THE HEATER AFTER AN INADVERTENT SHUTDOWN. THE HEATER'S CONTROL SYSTEM SHALL BE DESIGNED TO SHUT OFF THE GAS FLOW TO THE MAIN BURNER IN THE EVENT EITHER A GAS SUPPLY OR POWER SUPPLY INTERRUPTION OCCURS. THE HEATER'S BLOWER MOTOR SHALL BE THERMALLY PROTECTED AND THE MOTOR'S IMPELLER SHALL BE BALANCED. HEATER CONTROL ASSEMBLY SHALL INCLUDE THREE INDICATOR LIGHTS THAT DEFINE THE UNITS OPERATING INPUT RANGES. ONE INDICATOR SHALL VALIDATE AIR FLOW. TWO INDICATOR LIGHTS SHALL INDICATE LOW AND HIGH STAGES. THE HEATER'S AIR FLOW CONTROL SYSTEM SHALL PROVIDE A 45 SECOND PRE-PURGE PRIOR TO INITIATING BURNER OPERATION AND A 90 SECOND POST-PURGE UPON COMPLETION, EFFECTIVELY REMOVING ALL PRODUCTS OF COMBUSTION FROM HEAT EXCHANGER AND/OR RADIANT TUBES. NO CONDENSATION SHALL FORM AS A RESULT OF COMBUSTION IN THE COMBUSTION CHAMBER OR RADIANT TUBES WHILE AT OPERATING TEMPERATURES. THERMOSTAT CONTROL SHALL BE TWO-STAGE OPERATING ON 24 VOLTS.

F. VENTING SHALL BE PER MANUFACTURER APPROVAL AND SPECIFICATIONS.

G. THERMOSTAT: 2-STAGE, 24V, DIGITAL PROGRAMMABLE WALL-MOUNTING TYPE WITH 50 TO 90 DEG F (10 TO 32 DEG C) OPERATING RANGE, WITH THERMOSTAT GUARD FOR MOUNTING TO JUNCTION BOX. CONTROL TRANSFORMER SHALL BE INTEGRALLY MOUNTED. THERMOSTAT SHALL BE DETROIT RADIANT PRODUCTS CO. MODEL TH-BR52 OR APPROVED EQUAL.

1.27B GAS-FIRED UNIT HEATERS

A. GAS-FIRED HEATERS SHALL BE A SINGLE PACKAGED ASSEMBLY FROM THE MANUFACTURER BEARING UL, ETA, AND AGA LISTINGS. HEATERS SHALL BE NATURAL GAS FIRED, AND SHALL HAVE PROVISIONS FOR DIRECT-VENTING OF COMBUSTION AIR AND FLUE PRODUCTS, COMPLETE WITH ROOF THIMBLE, RAIN COLLAR, AND VENT CAP. HEATERS SHALL BE AVAILABLE WITH A MANUFACTURER-FURNISHED CONCENTRIC VENTING KIT, AND REMOTE LOW-VOLTAGE THERMOSTAT. HEATERS SHALL BE SINGLE-STAGE, AND BE 120V WITH INTEGRAL CONTROL TRANSFORMER, MINIMUM 80% AFUE EFFICIENCY, AND COME WITH GAS VALVE, PROPELLER TYPE FAN, ALUMINIZED STEEL TUBE TYPE HEAT EXCHANGER, POWDER-COATED ENAMEL HOUSING, AND STAINLESS STEEL DISCHARGE LOUVERS.

1.28 FANS

A. IN-LINE FANS SHALL BE AS MANUFACTURED BY PENN-BARRY OR APPROVED EQUAL. FANS SHALL BE IN-LINE TYPE EQUIPPED WITH BACKDRAFT DAMPER ON OUTLET AND INLET GRILLE WHERE INDICATED. FAN SHALL HAVE MODEL NUMBER AND CAPACITIES INDICATED ON THE DRAWINGS.

B. SIDE WALL PROPELLER FANS SHALL BE AS MANUFACTURED BY PENN-BARRY OR APPROVED EQUAL. FAN SHALL BE EQUIPPED WITH OSHA APPROVED MOTOR GUARD AND WALL SLEEVE. FANS SHALL BE BELT OR DIRECT DRIVE AS INDICATED ON THE DRAWING SCHEDULE. FANS SHALL BE CONTROLLED BY A THERMOSTAT (WHERE INDICATED) AND SHALL HAVE THE CAPACITIES INDICATED ON THE DRAWING SCHEDULE.

C. CEILING FANS: HIGH-VOLUME, LOW-SPEED FANS SHALL BE AS MANUFACTURED BY GREENHECK CORP. OR APPROVED EQUAL. FANS SHALL BE DIRECT-DRIVE AND EQUIPPED WITH INTEGRAL UL-LISTED VARIABLE-FREQUENCY DRIVE (ONE PER FAN), NEMA-3R DISCONNECT SWITCH, AND COMMUNICATION INTERFACE CONNECTORS FOR USE WITH REMOTE KEYPAD. FANS SHALL ALSO BE PROVIDED WITH THE FOLLOWING: STANDARD MILL FINISH, Z-PURLIN MOUNTING KIT, 5-FOOT DROP TUBE LENGTH, POWER WIRING PIGTAIL 910 FT WITH PRE-WIRED PLUG), INTERNAL COMMUNICATION WIRING, CAT-5e CONNECTOR CABLES FIRE ALARM RELAY AND PIGTAIL WIRING 96 FT), SAFETY CABLE AND GUY WIRES/BRACES WITH ASSOCIATED HARDWARE, 1-YEAR ELECTRICAL PARTS WARRANTY, AND 10-YEAR MECHANICAL PARTS WARRANTY.

1.29 GAS DETECTION EQUIPMENT

A. GAS DETECTION EQUIPMENT: PROVIDE A COMPLETE DEDICATED GAS DETECTION SYSTEM FOR THE INDOOR SHOP/MAINTENANCE AREA. SYSTEM SHALL INCLUDE A CENTRAL 24V DC CONTROLLER TO MONITOR GAS SENSORS IN EACH AREA, CARBON-MONOXIDE (CO) SENSORS, NITROGEN-DIOXIDE (NO2) SENSORS, MOUNTING HARDWARE, SHIELDED LOW-VOLTAGE WIRING, CONDUIT, ALARM STROBE, ETC. CONTROLLER SHALL BE CAPABLE OF ACCOMMODATING A MINIMUM OF EIGHT EXTERNAL SENSORS, WHICH SHALL BE POWERED FROM THE CENTRAL CONTROLLER. THE CONTROLLER SHALL HAVE A MINIMUM OF TWO FUSED DRY CONTACT CLOSURES RATED AT 4 AMPS EACH TO SELECTIVELY CLOSE UPON DETECTION IN A GIVEN ZONE (ASSIGNED AT TIME OF SET-UP). CONTROLLER SHALL HAVE A GRAPHICAL LCD DISPLAY WITH LED BACK LIGHT, NEMA 4X ENCLOSURE, AND COME WITH A 1-YEAR WARRANTY. BASIS-OF-DESIGN IS RKI MODEL 'BEACON 800' OR APPROVED EQUAL. CO SENSORS SHALL BE OF THE CATALYTIC-BEAD TYPE WITH MAGNETIC SWITCHES FOR NON-INTRUSIVE CALIBRATION, AND BE LOW-VOLTAGE DC POWERED, WITH TWO INDIVIDUALLY CONFIGURABLE ALARMS, FRONT PANEL LED INDICATORS, WITH 4-20mA OUTPUT OPTIONS. BASIS-OF-DESIGN IS RKI MODEL T3A OR APPROVED EQUAL. NO2 SENSORS SHALL BE OF THE ELECTRO-MECHANICAL TYPE, AND BE LOW-VOLTAGE DC POWERED, WITH TWO INDIVIDUALLY CONFIGURABLE ALARMS, FRONT PANEL LED INDICATORS, WITH 4-20mA OUTPUT OPTIONS. BASIS-OF-DESIGN IS RKI MODEL S2 OR APPROVED EQUAL. STROBES SHALL BE RKI MODEL 51-0098-RED, OR APPROVED EQUAL. THE SYSTEM AND ITS COMPONENTS ARE NOT REQUIRED TO BE EXPLOSION-PROOF. PROVIDE ALL INTER-CONNECTING LOW-VOLTAGE WIRING SIZED IN ACCORDANCE WITH MANUFACTURER'S RECOMMENDATIONS FOR TOTAL LENGTH. WIRING SHALL BE SHIELDED, AND INSTALLED IN METALLIC CONDUIT.

1.30 DIFFUSERS, REGISTERS AND GRILLES

A. SUPPLY AIR DIFFUSERS SHALL BE COMPLETE WITH WHITE ENAMEL FINISH OR APPROVED EQUAL. DIFFUSERS SHALL BE AS MANUFACTURED BY TITUS, KREUGER, PRICE, OR APPROVED EQUAL, WITH SIZES AND MODEL NUMBERS AS SCHEDULED.

B. RETURN AIR GRILLES SHALL BE COMPLETE WITH WHITE ENAMEL FINISH. GRILLES SHALL BE AS MANUFACTURED BY TITUS OR APPROVED EQUAL WITH SIZES AND MODEL NUMBERS AS SCHEDULED.

1.31 LOUVERS

A. LOUVERS NOT SPECIFIED WITH EQUIPMENT SHALL HAVE 0.08-INCH THICK FOUR-INCH DEEP ALUMINUM CHANNEL FRAME, WITH 0.08-INCH THICK DRAINABLE ALUMINUM STORM BLADES AT 45 DEGREES WITH A FINISH/COLOR AS DIRECTED BY THE OWNER'S REPRESENTATIVE. LOUVERS SHALL BE COMPLETE WITH INTEGRAL SLOPING SILL AND HEAD, INSTALLATION FLANGE, AND AN ALUMINUM 1/2-INCH MESH BIRD SCREEN. LOUVERS SHALL BE OF THE SIZES INDICATED ON THE DRAWINGS AND SHALL BE BY GREENHECK OR APPROVED EQUAL.

1.32 PIPING

A. REFRIGERANT PIPING SHALL BE SEAMLESS TYPE "ACR" COPPER ASTM B-88 AND SHALL BE INSULATED WITH 3/4 INCH THICK JOHNS-MANVILLE AEROTUBE OR EQUAL. REFRIGERANT LINE SIZES BETWEEN INDOOR COIL AND OUTDOOR COMPRESSOR UNIT SHALL BE SIZED IN ACCORDANCE WITH THE MANUFACTURER'S RECOMMENDATIONS FOR CAPACITIES REQUIRED AND ACTUAL PIPE LENGTHS AND FITTINGS TO BE INSTALLED. INSULATED OUTDOOR REFRIGERANT PIPING SHALL BE PROVIDED WITH PVC JACKETING.

B. THE CONTRACTOR SHALL PROVIDE A TRAPPED TYPE "L" COPPER CONDENSATE DRAIN LINE ON ALL COOLING COIL DRAIN PANS. SEE DETAIL ON DRAWING. ALL DRAIN LINES SHALL HAVE ADEQUATE CLEAN-OUT CONNECTIONS AND SHALL TERMINATE WHERE SHOWN ON THE DRAWINGS. SLOPE DRAIN LINES AT A MINIMUM OF 1/8"/FOOT. INSULATE PIPING WITH 1/2-INCH PRE-FORMED FIBERGLASS INSULATION WITH VAPOR BARRIER JACKETING, OR 1/2-INCH ELASTOMERIC INSULATION.

1.33 CONTROLS

A. THE CONTRACTOR SHALL PROVIDE AND INSTALL ALL NECESSARY CONTROL COMPONENTS INCLUDING, BUT NOT LIMITED TO, RELAYS, AUTOMATIC DAMPERS, DAMPER OPERATORS, THERMOSTATS, CONTROLLERS, TIME CLOCKS, ETC. AND WIRING AS REQUIRED TO PROVIDE AUTOMATIC TEMPERATURE CONTROL. ALL WIRING SHALL BE DONE IN ACCORDANCE WITH THE LOCAL AND STATE CODES AND THE NATIONAL ELECTRICAL CODE. ALL CONTROL WIRING SHALL BE INSTALLED IN METALLIC CONDUIT WHERE EXPOSED, AND SHALL BE PLENUM-RATED WHERE CONCEALED.

B. THERMOSTATS FOR SPLIT SYSTEMS (COOLING COIL, AND ASSOCIATED CONDENSING UNIT), SHALL BE HONEYWELL VISIONPRO 8000 TB8220 SERIES WITH SEVEN-DAY PROGRAMMING FOR NIGHT SETBACK OR APPROVED EQUAL. THERMOSTAT SHALL BE MOUNTED 60 INCHES AFF. THERMOSTATS FOR INFRARED HEATERS SHALL BE AS SPECIFIED UNDER THOSE EQUIPMENT SECTIONS. THERMOSTATS CONTROLLING EXHAUST FANS SHALL BE COOLING-ONLY, 24V, WITH A MINIMUM ADJUSTMENT RANGE FROM 50F TO 90F.

C. A TIME CLOCK SHALL BE PROVIDED IN THE NEW BUILDING MEZZANINE LEVEL, TO PROVIDE AUXILIARY CONTROL OF THE OUTSIDE AIR DAMPER FOR AC-1 AND EF-1 EXHAUST SYSTEM.

1.34 SEQUENCE OF OPERATIONS

A. EXHAUST FANS:

1. EF-1: TIME CLOCK SHALL START EF-1 AT THE BEGINNING OF THE OCCUPIED PERIOD, AND SHALL DE-ENERGIZE FAN AT THE END OF THE OCCUPIED PERIOD. CONTRACTOR SHALL ADJUST TIMER FOR OCCUPIED PERIODS IN ACCORDANCE WITH OWNER'S DIRECTION.

2. EF-3: HIGH-RATE PURGE VENTILATION NEW MECHANICS SHOP: EITHER OF TWO INPUTS TO THE FAN MOTOR STARTER SHALL START THE FAN: 1. UPON DETECTION OF HIGH LEVELS OF EITHER CARBON-MONOXIDE (CO) OR NITROGEN-DIOXIDE (NO2) BY THE RESPECTIVE GAS SENSORS IN THE SPACE, THE GAS DETECTION SYSTEM CONTROLLER SHALL OPEN EF-3 DISCHARGE DAMPER AND START EXHAUST FAN EF-3 (VIA DRY CONTACT CLOSURE TO THE FAN STARTER), AND OPEN THE ASSOCIATED INTAKE DAMPER WIDE OPEN. WHEN SPACE CO/NO2 LEVELS SUBSEQUENTLY FALL TO ACCEPTABLE SETPOINT LEVELS, THE FAN SHALL DE-ENERGIZE, THE DISCHARGE DAMPER SHALL CLOSE, AND THE INTAKE DAMPER SHALL CLOSE. 2. UPON THE SPACE DRY BULB TEMPERATURE RISING TO 80 DEG F (ADJUSTABLE) AS DETERMINED BY THE DEDICATED SPACE THERMOSTAT, THE FAN STARTER, VIA DRY CONTACT CLOSURE, SHALL OPEN EF-3 DISCHARGE DAMPER AND START EXHAUST FAN EF-3, AND OPEN THE ASSOCIATED INTAKE DAMPER WIDE OPEN. UPON A SUBSEQUENT FALL IN SPACE TEMPERATURE TO 75 DEG F (ADJUSTABLE), THE REVERSE SHALL OCCUR. OCCUPANT SHALL ALSO HAVE THE ABILITY TO TEMPORARILY MANUALLY LOWER THE THERMOSTATIC SETPOINT TO FORCE THE STARTING OF THE FAN WHEN DESIRED.

3. EF-2: SERVING NEW MECHANICS SHOP: FAN SHALL OPERATE CONTINUOUSLY TO PROVIDE MINIMUM EXHAUST REQUIREMENTS.

4. EF-4: WASH BAY EXHAUST: FAN SHALL BE PROVIDED WITH A MANUAL TIMED START SWITCH. USER SHALL ADJUST LINE-VOLTAGE TIMER SWITCH TO DESIRED LENGTH OF TIME. UPON BEING STARTED AT THE WALL SWITCH, THE MOTORIZED INTAKE DAMPERS SHALL OPEN, THE FAN DISCHARGE DAMPERS SHALL OPEN, AND THE FAN SHALL START. UPON SUBSEQUENTLY BEING SWITCHED TO THE 'OFF' POSITION AT THE WALL SWITCH, OR UPON THE PRESET TIME EXPIRING, THE REVERSE SHALL OCCUR.

5. EF-5: EXISTING BUILDING EXHAUST: FAN SHALL OPERATE CONTINUOUSLY TO PROVIDE MINIMUM VENTILATION REQUIREMENTS.

6. CF-1/2: CEILING FANS SERVING MECHANICS SHOP: FANS ARE VFD-DRIVEN, AND BOTH SHALL OPERATE IN UNISON AT THE SAME SPEED. THE FANS SHALL BE CONTROLLED VIA A MANUFACTURER-SUPPLIED WALL INTERFACE/KEYPAD. FAN ENERGIZING/DE-ENERGIZING, ROTATION DIRECTION, AND SPEED SELECTION SHALL BE MANUAL, AS ENTERED AT HE KEYPAD. CONTRACTOR SHALL INSTALL ALL CONTROL DEVICES, AND ALL NECESSARY INTERFACING CABLES (CAT-5e) FROM FAN-TO-FAN, AND FROM FANS TO FIRE ALARM PANEL. UPON RECEIVING A WATER FLOW ALARM FROM THE FIRE ALARM PANEL, THE CEILING FANS SHALL DE-ENERGIZE.

B. SPLIT SYSTEMS (AC-1/CU-1):

1. INDIVIDUAL SYSTEM PROGRAMMABLE THERMOSTATS SHALL BE PROGRAMMED WITH OCCUPIED AND UNOCCUPIED PERIODS AND CORRESPONDING TEMPERATURE SETPOINTS (COORDINATE WITH OWNER FOR SETTINGS).

2. AC-1/AC-2: UPON THE START OF THE OCCUPIED PERIOD, THE SUPPLY FAN SHALL START AND RUN CONTINUOUSLY, AND THE OUTSIDE AIR DAMPER SHALL OPEN (VIA TIME CLOCK - DAMPER REMAINS CLOSED DURING UNOCCUPIED PERIODS). DURING UNOCCUPIED PERIODS, THE SUPPLY FAN OF AC-1 SHALL CYCLE WITH A CALL FOR COOLING/HEATING.

3. HEATING: IF THE RESPECTIVE SPACE TEMPERATURE FALLS BELOW SETPOINT, THE RESPECTIVE SYSTEM'S GAS FURNACE SHALL FIRE IN STAGES, AS PRESCRIBED BY THE MANUFACTURER'S FIRING CONTROLS, TO MAINTAIN SPACE HEATING TEMPERATURE SETPOINT.

4. COOLING: UPON A RISE IN SPACE TEMPERATURE ABOVE SETPOINT, THE UNIT CONTROLLER SHALL ENGAGE THE ASSOCIATED CONDENSING UNIT TO PROVIDE COOLING AS REQUIRED TO MAINTAIN SPACE COOLING SETPOINT.

C. ELECTRIC WALL HEATERS (CUH):

1. WALL HEATERS SHALL OPERATE UNDER THEIR INTEGRAL CONTROLS AND INTEGRAL THERMOSTAT TO MAINTAIN SPACE HEATING TEMPERATURE SETPOINT. INITIAL HEATING TEMPERATURE SETPOINTS SHALL BE SET AT 68 DEG F, ADJUSTABLE.

D. INFRARED GAS-FIRED TUBE HEATERS (IH):

1. GAS-FIRED HEATERS ARE FURNISHED WITH FACTORY 7-DAY PROGRAMMABLE THERMOSTAT, ONE PER HEATER. CONTRACTOR SHALL PROGRAM EACH THERMOSTAT WITH THE OCCUPIED AND UNOCCUPIED HOURS AND CORRESPONDING TEMPERATURE SETPOINTS. COORDINATE WITH OWNER. UPON A CALL FOR HEAT FROM THE SPACE THERMOSTAT, THE UNIT'S INTEGRAL FIRING CONTROLS SHALL FIRE ONE OR BOTH STAGES OF CAPACITY AS REQUIRED TO MAINTAIN SPACE HEATING TEMPERATURE SETPOINT.

E. GAS DETECTION EQUIPMENT:

1. THE CONTRACTOR SHALL WIRE ALL GAS DETECTION CONTROLLERS AND SENSORS AS INDICATED ON PLANS AND WITHIN THESE SPECIFICATIONS. REFER ALSO TO EXHAUST FAN SEQUENCES OF OPERATION. UPON DETECTION OF EITHER NITROGEN-DIOXIDE OR CARBON MONOXIDE ABOVE THE PREDETERMINED MAXIMUM PPM LEVEL, THE DRY CONTACTS WITHIN THE CONTROLLER OF THE AFFECTED SPACE SHALL CLOSE, AND INITIATE THE RESPONSIVE EXHAUST ACTION DESCRIBED. ALL HIGH LEVEL ALARM EVENTS SHALL BE RECORDED IN THE CONTROLLER'S MEMORY, INCLUDING TIMES, SENSOR LOCATIONS, AND MAGNITUDE LEVELS.

1.35 THE EQUIPMENT AND MATERIALS SHALL BE COMPLETELY CLEANED PRIOR TO TESTING, INSULATING AND PLACING THE SYSTEM IN OPERATION.

1.36 THE REFRIGERATION SYSTEM SHALL BE TESTED AND PROVEN TIGHT PRIOR TO PLACING IN OPERATION. UNITS SHALL BE CHECKED FOR PROPER REFRIGERANT CHARGE AND OPERATION AND ADJUSTED AS PER THE MANUFACTURER'S RECOMMENDATIONS.

1.37 SYSTEM BALANCING: THE COMPLETE SUPPLY, RETURN AND EXHAUST AIR DUCT SYSTEMS, INCLUDING FANS, DAMPERS, OUTLETS AND APPURTENANCES SHALL BE PROPERLY BALANCED TO DELIVER AIR VOLUMES WITHIN +/- 10 PERCENT OF THE VALUES INDICATED. THE TOTAL SYSTEM LEAKAGE THROUGH DUCT JOINTS AND CONNECTIONS SHALL NOT EXCEED THREE PERCENT. TEMPERATURE, AMPERE AND RPM READINGS SHALL ALSO BE PROVIDED TO VERIFY SYSTEM PERFORMANCE. SUBMIT THREE COPIES OF THE BALANCING REPORTS AT COMPLETION OF THE BALANCING.

1.38 THE CONTRACTOR SHALL FURNISH THREE SETS OF O&M AND INSTRUCTION MANUALS TO THE OWNER AT THE COMPLETION OF CONSTRUCTION.

1.39 START-UP: ALL EQUIPMENT AND MATERIALS SHALL BE COMPLETELY CLEANED PRIOR TO TESTING, INSULATING, AND PLACING THE SYSTEM IN OPERATION. REFRIGERATION SYSTEMS SHALL BE TESTED AND PROVEN TIGHT PRIOR TO PLACING IN OPERATION. UNITS SHALL BE CHECKED FOR PROPER REFRIGERANT CHARGE AND OPERATION AND ADJUSTED AS PER THE MANUFACTURER'S RECOMMENDATIONS. SPLIT SYSTEMS SHALL BE PROVIDED WITH NEW FILTERS PRIOR TO OWNER OCCUPATION.

-END OF MECHANICAL SPECIFICATIONS-

McCARTHY ENGINEERING ASSOCIATES, INC.
www.McCarthy-Engineering.com
2500 East High Street, Suite 630
Pottstown, PA 19464
Phone: 610.373.8001

Project No.
230004

Revision	Date	Description	Rev.By
1	8/9/2023	ADDENDUM 1	

This document and all information and work product represented by and contained herein, is the sole and exclusive property of McCarthy Engineering Associates, Inc. The information contained herein is licensed only for limited use by the intended recipient, and no license, permission or authority is extended, directly or implied, to any party without the express written permission of McCarthy Engineering Associates, Inc.
Copyright, 2017, McCarthy Engineering Associates, Inc. All rights reserved

McCARTHY ENGINEERING ASSOCIATES, INC.
555 Van Reed Road, Suite 2, Wyomissing, PA 19610
www.McCarthy-Engineering.com
Phone: 610.373.8001
2500 East High Street, Suite 630, Pottstown, PA 19464

SEAL:

MECHANICAL SPECIFICATIONS
" PUBLIC WORKS FACILITY "

Client: WYOMISSING BOROUGH
Location: WYOMISSING BOROUGH, BERKS COUNTY, PENNSYLVANIA
Date: JULY 19, 2023

DRAWN BY: SAS	PROJ. MANAGER: NEC
PRINCIPAL: JCM	SCALE: AS NOTED
DRAWING NO. M-5	
PROJECT NO. 230004	

ISSUED FOR BID JULY 19, 2023
NOT FOR CONSTRUCTION

LEGEND

- LIGHTING FIXTURE, LETTER SUBSCRIPT INDICATES SCHEDULED FIXTURE TYPE. LOWERCASE LETTER INDICATES SWITCH CIRCUIT.
- EMERGENCY LIGHTING FIXTURE, LETTER SUBSCRIPT INDICATES SCHEDULED FIXTURE TYPE.
- NIGHT LIGHT FIXTURE, LETTER SUBSCRIPT INDICATES SCHEDULED FIXTURE TYPE.
- WALL-WASH LIGHTING FIXTURE. LETTER SUBSCRIPT INDICATES SCHEDULED FIXTURE TYPE.
- TRACK LIGHT. LETTER SUBSCRIPT INDICATES SCHEDULED FIXTURE TYPE.
- (CEILING / WALL) NORMAL/EMERGENCY EXIT SIGN. ARROWS INDICATE DIRECTION OF EXIT. SOLID FILL INDICATES NUMBER OF FACES, LETTER SUBSCRIPT INDICATES SCHEDULED FIXTURE TYPE.
- EMERGENCY LIGHTING BATTERY UNIT TO PROVIDE 1 1/2 HOURS OF EMERGENCY LIGHT. LETTER SUBSCRIPT INDICATES SCHEDULED FIXTURE TYPE.
- LOW VOLTAGE REMOTE EMERGENCY LIGHTS. LETTER SUBSCRIPT INDICATES SCHEDULED FIXTURE TYPE.
- SINGLE POLE TOGGLE TYPE A/C SWITCH 20 AMP, 120/277 VOLT MOUNT @ 3'-10" AFF, UNLESS OTHERWISE NOTED
- DOUBLE POLE TOGGLE TYPE A/C SWITCH 20 AMP, 120/277 VOLT MOUNT @ 3'-10" AFF, UNLESS OTHERWISE NOTED
- THREE WAY TOGGLE TYPE A/C SWITCH 20 AMP, 120/277 VOLT MOUNT @ 3'-10" AFF, UNLESS OTHERWISE NOTED
- FOUR WAY TOGGLE TYPE A/C SWITCH 20 AMP, 120/277 VOLT MOUNT @ 3'-10" AFF, UNLESS OTHERWISE NOTED
- SPECIALTY SWITCH MOUNT @ 3'-10" AFF, UNLESS OTHERWISE NOTED
- FAN SPEED CONTROL SWITCH MOUNT @ 3'-10" AFF, UNLESS OTHERWISE NOTED (FURNISHED BY MC, INSTALLED & WIRED BY EC)
- MANUAL MOTOR STARTER MOUNT @ 3'-10" AFF, UNLESS OTHERWISE NOTED
- SINGLE POLE PILOT LIGHT TOGGLE TYPE A/C SWITCH 20 AMP, 120/277 VOLT MOUNT @ 3'-10" AFF, UNLESS OTHERWISE NOTED
- SINGLE POLE 1500W DIMMER SWITCH MOUNT @ 3'-10" AFF, UNLESS OTHERWISE NOTED
- SINGLE POLE 1500W 3 WAY DIMMER SWITCH MOUNT @ 3'-10" AFF, UNLESS OTHERWISE NOTED
- SINGLE POLE KEY SWITCH 20 AMP, 120/277 VOL MOUNT @ 3'-10" AFF, UNLESS OTHERWISE NOTED
- THREE POSITION TWO CIRCUIT MAINTAINED CONTACT SWITCH (SPDT) MOUNT @ 3'-10" AFF, UNLESS OTHERWISE NOTED
- AUTOMATIC TIMER SWITCH – TORK #SSA200 20 AMP, 120/277 VOLT MOUNT @ 3'-10" AFF, UNLESS OTHERWISE NOTED *-PRESET FOR MAXIMUM OF 2 HOUR OVERIDE.
- AUTOMATIC WALL SWITCH – OCCUPANCY (AUTO ON) WATTSTOPPER DW-100 OR APPROVED EQUAL MOUNT @ 3'-10" AFF, UNLESS OTHERWISE NOTED
- AUTOMATIC WALL SWITCH – VACANCY (MANUAL ON) WATTSTOPPER DW-100 OR APPROVED EQUAL MOUNT @ 3'-10" AFF, UNLESS OTHERWISE NOTED
- DUAL LEVEL LIGHTING AUTOMATIC WALL SWITCH – OCCUPANCY (AUTO ON) WATTSTOPPER DW-200 OR APPROVED EQUAL MOUNT @ 3'-10" AFF, UNLESS OTHERWISE NOTED
- DUAL LEVEL LIGHTING AUTOMATIC WALL SWITCH – VACANCY (MANUAL ON) WATTSTOPPER DW-200 OR APPROVED EQUAL MOUNT @ 3'-10" AFF, UNLESS OTHERWISE NOTED
- DUAL LEVEL LIGHTING AUTOMATIC WALL SWITCH – VACANCY/OCCUPANCY WATTSTOPPER DW-200 OR APPROVED EQUAL MOUNT @ 3'-10" AFF, UNLESS OTHERWISE NOTED
- AUTOMATIC DIMMING WALL SWITCH – OCCUPANCY (AUTO ON) WATTSTOPPER DW-311 OR APPROVED EQUAL MOUNT @ 3'-10" AFF, UNLESS OTHERWISE NOTED
- AUTOMATIC DIMMING WALL SWITCH – VACANCY (MANUAL ON) WATTSTOPPER DW-311 OR APPROVED EQUAL MOUNT @ 3'-10" AFF, UNLESS OTHERWISE NOTED
- AUTOMATIC WALL SWITCH W/ FAN DELAY OFF LEVITON OSSMD-FT OR APPROVED EQUAL MOUNT @ 3'-10" AFF, UNLESS OTHERWISE NOTED
- DUAL TECHNOLOGY CEILING MOUNTED OCCUPANCY SENSOR (AUTO ON) WATTSTOPPER DT300 OR APPROVED EQUAL LOWERCASE LETTER INDICATES LINKED SENSORS
- DUAL TECHNOLOGY WALL MOUNTED OCCUPANCY SENSOR (AUTO ON) MOUNT BELOW ANY PENDANT MOUNTED LIGHTING WATTSTOPPER DT200 OR APPROVED EQUAL
- CORRIDOR CEILING MOUNTED OCCUPANCY SENSOR WATTSTOPPER WT2250 OR APPROVED EQUAL
- DUAL TECHNOLOGY CEILING MOUNTED VACANCY SENSOR (MANUAL ON) WATT STOPPER DT300 OR APPROVED EQUAL LOWERCASE LETTER INDICATES LINKED SENSORS
- DUAL TECHNOLOGY WALL MOUNTED VACANCY SENSOR (MANUAL ON) MOUNT BELOW ANY PENDANT MOUNTED LIGHTING WATTSTOPPER DT200 OR APPROVED EQUAL
- CORRIDOR CEILING MOUNTED VACANCY SENSOR (MANUAL ON) WATTSTOPPER WT2250 OR APPROVED EQUAL
- DUAL TECHNOLOGY CEILING MOUNTED VACANCY/OCCUPANCY SENSOR WATT STOPPER DT300 OR APPROVED EQUAL LOWERCASE LETTER INDICATES LINKED SENSORS
- DUAL TECHNOLOGY WALL MOUNTED VACANCY/OCCUPANCY SENSOR MOUNT BELOW ANY PENDANT MOUNTED LIGHTING WATTSTOPPER DT200 OR APPROVED EQUAL
- CORRIDOR CEILING MOUNTED VACANCY/OCCUPANCY SENSOR WATTSTOPPER WT2250 OR APPROVED EQUAL
- MOMENTARY ON-OFF WALL SWITCH LOW VOLTAGE WATTSTOPPER LVSW-101 OR APPROVED EQUAL MOUNT @ 3'-10" AFF, UNLESS OTHERWISE NOTED
- DUAL LEVEL MOMENTARY ON-OFF WALL SWITCH LOW VOLTAGE WATTSTOPPER LVSW-102 OR APPROVED EQUAL MOUNT @ 3'-10" AFF, UNLESS OTHERWISE NOTED
- DAYLIGHTING/VACANCY DIGITAL ROOM CONTROLLER WATTSTOPPER LMRC UNIT OR APPROVED EQUAL X INDICATES QUANTITY OF RELAYS (1, 2 OR 3) 1 IS LMRC-211, 2 IS LMRC-212, 3 IS LMRC-213
- ROOM CONTROLLER CEILING MOUNTED DIGITAL PHOTOSENSOR WATTSTOPPER LMLS-500 OR APPROVED EQUAL
- ROOM CONTROLLER CEILING MOUNTED DIGITAL OCCUPANCY SENSOR WATTSTOPPER LMDC-100 OR APPROVED EQUAL
- ROOM CONTROLLER WALL MOUNTED DIGITAL OCCUPANCY SENSOR WATTSTOPPER LMDX-100 OR APPROVED EQUAL
- ROOM CONTROLLER DIGITAL WALL SWITCH LOW VOLTAGE WATTSTOPPER LMSW-101 OR APPROVED EQUAL MOUNT @ 3'-10" AFF, UNLESS OTHERWISE NOTED
- ROOM CONTROLLER DIGITAL DIMMING WALL SWITCH LOW VOLTAGE WATTSTOPPER LMDM-101 OR APPROVED EQUAL MOUNT @ 3'-10" AFF, UNLESS OTHERWISE NOTED
- PHOTOELECTRIC CELL – POINT NORTH MOUNT AS INDICATED ON DRAWINGS

- SINGLE RECEPTACLE – 2 POLE, 3 WIRE GROUNDING, 20 AMP, 125 VOLT, NEMA 5-20R MOUNT @ 1'-6" AFF UNLESS OTHERWISE NOTED
- DUPLEX RECEPTACLE – 2 POLE, 3 WIRE GROUNDING, 20 AMP, 125 VOLT, NEMA 5-20R MOUNT @ 1'-6" AFF UNLESS OTHERWISE NOTED
- SPLIT-WIRED DUPLEX RECEPTACLE – 2 POLE, 3 WIRE GROUNDING, 20 AMP, 125 VOLT, NEMA 5-20R MOUNT @ 1'-6" AFF UNLESS OTHERWISE NOTED TOP OUTLET TO BE SWITCHED
- QUAD RECEPTACLE (2 DUPLEX RECEPTACLES IN SAME BOX) MOUNT @ 1'-6" AFF UNLESS OTHERWISE NOTED
- FLOOR BOX WITH DUPLEX RECEPTACLE
- FLOOR BOX WITH QUAD RECEPTACLE
- GF: GROUND FAULT CIRCUIT INTERRUPTING DUPLEX RECEPTACLE 2 POLE, 3 WIRE GROUNDING, 20 AMP, 125 VOLT, NEMA 5-20R MOUNT @ 1'-6" AFF UNLESS OTHERWISE NOTED
- EWC: ELECTRIC WATER COOLER DUPLEX RECEPTACLE WITH GROUND FAULT INTERRUPTING CAPACITY – COORDINATE MOUNTING HEIGHT WITH EQUIPMENT
- WP: UL LISTED WEATHERPROOF ENCLOSURE WITH GROUND FAULT CIRCUIT INTERRUPTING DUPLEX RECEPTACLE MOUNT 2'-0" AFF/AFG, UNLESS OTHERWISE NOTED
- T: TAMPER RESISTANT DUPLEX RECEPTACLE 2 POLE, 3 WIRE GROUNDING, 20 AMP, 125 VOLT, NEMA 5-20R MOUNT @ 1'-6" AFF UNLESS OTHERWISE NOTED
- IG: ISOLATED GROUND DUPLEX RECEPTACLE 2 POLE, 3 WIRE GROUNDING, 20 AMP, 125 VOLT, NEMA 5-20R MOUNT @ 1'-6" AFF UNLESS OTHERWISE NOTED
- EM: EMERGENCY CIRCUIT DUPLEX RECEPTACLE – 2 POLE, 3 WIRE GROUNDING, 20 AMP, 125 VOLT, NEMA 5-20R RECEPTACLE COVERPLATE TO BE RED IN COLOR MOUNT @ 1'-6" AFF UNLESS OTHERWISE NOTED
- XP: EXPLOSION PROOF DUPLEX RECEPTACLE CLASS & DIVISION AS INDICATED ON DRAWINGS MOUNTING AS INDICATED ON DRAWINGS
- USB: USB DUPLEX RECEPTACLE 2 POLE, 3 WIRE GROUNDING, 20 AMP, 125 VOLT, NEMA 5-20R 2 PORT, 5VDC, 3A CHARGING MOUNT @ 1'-6" AFF UNLESS OTHERWISE NOTED
- SINGLE RECEPTACLE DROP CORD – 2 POLE, 3 WIRE GROUNDING, 20 AMP, 125 VOLT, NEMA 5-20R COORDINATE MOUNTING HEIGHT WITH EQUIPMENT/OWNER
- SPECIALTY RECEPTACLE – NEMA TYPE AS INDICATED ON DRAWING RECEPTACLE SHALL MATCH PLUG TYPE OF EQUIPMENT SERVED
- CLOCK RECEPTACLE – 2 POLE, 3 WIRE GROUNDING, 15 AMP, 125 VOLT, NEMA 5-15R MOUNT 7'-0" AFF, UNLESS OTHERWISE NOTED
- SURFACE MOUNTED RACEWAY WITH DUPLEX RECEPTACLES SPACING OF RECEPTACLES TO BE 24", UNLESS OTHERWISE NOTED MOUNT AS INDICATED ON DRAWINGS
- R: MOTOR STARTER RELAY
- TP: TELEPOWER POLE
- J: JUNCTION BOX
- FD: FURNITURE JUNCTION BOX, WALL FOR DATA WHIP IN-FEED
- FD: FURNITURE JUNCTION BOX, FLOOR FOR DATA WHIP IN-FEED
- FP: FURNITURE JUNCTION BOX, WALL FOR POWER WHIP IN-FEED
- FP: FURNITURE JUNCTION BOX, FLOOR FOR POWER WHIP IN-FEED
- PANELBOARD – SURFACE MOUNTED MOUNT 6'-0" TO TOP OF HIGHEST BREAKER RATINGS AS INDICATED ON DRAWINGS
- PANELBOARD – FLUSH MOUNTED MOUNT 6'-0" TO TOP OF HIGHEST BREAKER RATINGS AS INDICATED ON DRAWINGS
- FUSE – SIZE AS INDICATED ON DRAWINGS
- MOTOR OR MOTORIZED EQUIPMENT SIZE AS INDICATED ON DRAWINGS
- DISCONNECT SWITCH. NUMBER OF POLES, AMPERE RATING, VOLTAGE, NEMA TYPE ENCLOSURE AS INDICATED. MOUNT 4'-0" AFF TO CENTERLINE OF HANDLE.
- COMBINATION MAGNETIC MOTOR STARTER, FULL VOLTAGE NON-REVERSING. SIZE AND NEMA TYPE ENCLOSURE AS INDICATED. MOUNT 4'-0" AFF TO CENTERLINE OF HANDLE.
- FUSED DISCONNECT SWITCH. NUMBER OF POLES, AMPERE RATING, FUSE SIZE AND NEMA TYPE ENCLOSURE AS INDICATED. MOUNT 4'-0" AFF TO CENTERLINE OF HANDLE.
- ENCLOSED MOLDED CASE CIRCUIT BREAKER. NUMBER OF POLES, AMPERE RATING AND NEMA TYPE ENCLOSURE AS INDICATED. MOUNT 4'-0" AFF TO CENTERLINE OF HANDLE.
- T: ELECTRICAL TRANSFORMER TYPE/SIZE AS INDICATED ON DRAWINGS
- EP: UNDERGROUND PRIMARY ELECTRICAL SERVICE
- ES: UNDERGROUND SECONDARY ELECTRICAL SERVICE
- T: UNDERGROUND TELEPHONE SERVICE
- C: UNDERGROUND CATV SERVICE
- OE: OVERHEAD AERIAL ELECTRICAL SERVICE
- EXISTING BRANCH CIRCUITRY TO REMAIN
- BRANCH CIRCUIT RUN BELOW GRADE MINIMUM COVER, DEPTH AS PER NEC
- BRANCH CIRCUIT RUN CONCEALED – 2 #12 & 1 #12G, 3/4" CND, UNLESS OTHERWISE NOTED PROVIDE ADDITIONAL SWITCHED CONDUCTORS AS REQUIRED
- EMERGENCY BRANCH CIRCUIT RUN CONCEALED – 2 #12 & 1 #12G, 3/4" CND, UNLESS OTHERWISE NOTED PROVIDE ADDITIONAL SWITCHED CONDUCTORS AS REQUIRED
- G: #4/0 AWG BARE COPPER GROUND CONDUCTOR RUN 2'-6" BELOW FINISHED GRADE, UNLESS OTHERWISE NOTED
- CONDUIT TURNING DOWN
- CONDUIT TURNING UP
- 1 CIRCUIT HOME RUN TO PANEL 2 #12 & 1 #12G, 3/4" CND, UNLESS OTHERWISE NOTED
- 2 CIRCUIT HOME RUN TO PANEL 4 #12 & 1 #12G, 3/4" CND, UNLESS OTHERWISE NOTED
- 3 CIRCUIT HOME RUN TO PANEL 6 #12 & 1 #12G, 3/4" CND, UNLESS OTHERWISE NOTED
- DIRECT CURRENT CIRCUIT RUN CONCEALED
- 3/4" X 10'-0" COPPER-CLAD STEEL GROUND ROD

- COMBINATION DATA/COMMUNICATIONS DEVICE BOX MOUNT 1'-6" AFF, UNLESS OTHERWISE NOTED
- TELEPHONE DEVICE BOX MOUNT 1'-6" AFF, UNLESS OTHERWISE NOTED
- WALL MOUNTED TELEPHONE DEVICE BOX MOUNT 4'-0" AFF, UNLESS OTHERWISE NOTED
- PAY-TELEPHONE DEVICE BOX MOUNT 4'-0" AFF, UNLESS OTHERWISE NOTED
- COMPUTER/DATA DEVICE BOX MOUNT 1'-6" AFF, UNLESS OTHERWISE NOTED
- FLOOR BOX WITH DATA/COMMUNICATIONS DEVICE BOX
- FLOOR BOX WITH TELEPHONE DEVICE BOX
- FLOOR BOX WITH COMPUTER/DATA DEVICE BOX
- TELEVISION CABLE DEVICE BOX MOUNT 1'-6" AFF, UNLESS OTHERWISE NOTED
- SPEAKER – CEILING RECESSED MOUNTED
- SPEAKER – SURFACE MOUNTED @ 84" AFF
- MICROPHONE JACK MOUNT 1'-6" AFF, UNLESS OTHERWISE NOTED
- VOLUME CONTROLLER MOUNT 3'-10" AFF, UNLESS OTHERWISE NOTED
- INTERCOM CONSOLE WITH TABLE TOP SPEAKER FRAME
- INTERCOM DOOR – OUTDOOR WITH SURFACE MOUNTING FRAME
- INTERCOM WALL – SIMILAR TO CONSOLE BUT WITH WALL ROUGH-IN FRAME
- INTERCOM MASTER WITH CHIME MODULE, HOUSING AND TRANSFORMER
- MAGNETIC DOOR HOLDER MOUNT AS INDICATED ON DRAWINGS
- DS: MAGNETIC DOOR SWITCH
- KP: KEYPAD
- PUSH-BUTTON
- DOOR BUZZER
- CR: CARD READER
- MD: MOTION DETECTOR
- NCD: NURSE CALL DUTY STATION
- NURSE CALL DOME LIGHT MOUNT @ 6" ABOVE DOOR, UNLESS OTHERWISE NOTED
- NURSE CALL STATION WITH PULL CORD MOUNT @ 3'-10" AFF, UNLESS OTHERWISE NOTED
- CODE BLUE BUTTON MOUNT @ 3'-10" AFF, UNLESS OTHERWISE NOTED
- CODE RED BUTTON MOUNT @ 3'-10" AFF, UNLESS OTHERWISE NOTED
- NURSE CALL STATION WITH BUTTON MOUNT @ 3'-10" AFF, UNLESS OTHERWISE NOTED
- COMBINATION FIXED TEMPERATURE RATE-OF-RISE THERMAL DETECTOR – CEILING MOUNT
- PHOTOELECTRIC SMOKE DETECTOR – CEILING MOUNT
- PHOTOELECTRIC SMOKE DETECTOR – DUCT MOUNT
- IONIZATION SMOKE DETECTOR – CEILING MOUNT
- SMOKE DETECTOR – CEILING MOUNT
- MANUAL FIRE ALARM PULL STATION MOUNT @ 3'-8" AFF, UNLESS OTHERWISE NOTED
- FIRE ALARM BELL WITH VISUAL INDICATING LIGHT
- FIRE ALARM HORN WITH VISUAL INDICATING LIGHT MOUNT @ 7-6" AFF # = CANDELA RATING WHEN HIGHER THAN 15
- FIRE ALARM VISUAL INDICATING LIGHT ONLY (ADA APPROVED) MOUNT @ 7'-6" AFF # = CANDELA RATING WHEN HIGHER THAN 15
- FIRE ALARM CONTROL MODULE
- FIRE ALARM MONITORING MODULE
- FT: FIREFIGHTER TELEPHONE JACK
- FS: SPRINKLER SYSTEM FLOW SWITCH (FURNISHED BY OTHERS) ELECTRICAL CONTRACTOR SHALL PROVIDE MONITORING MODULE
- TS: SPRINKLER SYSTEM TAMPER SWITCH (FURNISHED BY OTHERS) ELECTRICAL CONTRACTOR SHALL PROVIDE MONITORING MODULE
- THERMOSTAT MOUNT @ 3'-10" AFF, UNLESS OTHERWISE NOTED
- CONNECT NEW TO EXISTING
- REFER TO INDICATED DEMOLITION NOTE
- REFER TO INDICATED NEW WORK POWER NOTE
- REFER TO INDICATED NEW WORK LIGHTING NOTE
- REFER TO INDICATED NEW WORK MECHANICAL POWER NOTE

ABBREVIATIONS

@	AT
&	AND
#, NO.	NUMBER
A, AMP	AMPERE
AC	AIR CONDITION
AC	ALTERNATING CURRENT
ACC	AIR COOLED CONDENSING UNIT
ACU	AIR CONDITIONING UNIT
AD	ACCESS DOOR
AF	AMP FRAME
AFF	ABOVE FINISHED FLOOR
AFG	ABOVE FINISHED GRADE
AL	ALUMINUM
APPROX	APPROXIMATELY
AS	AMMETER SWITCH
AT	AMP TRIP
AUX	AUXILIARY
AVG	AVERAGE
AWG	AMERICAN WIRE GAUGE
BB	BASEBOARD RADIATION
BKR	BREAKER
BLDG	BUILDING
BSMNT	BASEMENT
C	CHILLER
CAB	CABINET
CB	CIRCUIT BREAKER
CC	CONCRETE
CCTV	CLOSED CIRCUIT TELEVISION
CH	CABINET HEATER
CKT	CIRCUIT
CL	CENTER LINE
CLG	CEILING
CMU	CONCRETE MASONRY UNIT
CND	CONDUIT
CNTR	MOUNT 8" ABOVE COUNTERTOP
CO	COMPANY
CONT	CONTINUATION
CORR	CORRIDOR
CPT	CONTROL POWER TRANSFORMER
CR	CONTROL RELAY
CRT	CATHODE RAY TUBE
CT	CURRENT TRANSFORMER
DC	DIRECT CURRENT
DETD	DUAL ELEMENT TIME DELAY
DISC	DISCONNECT
DWG	DRAWING
EBR	ELECTRIC BASEBOARD RADIATION
EC	ELECTRICAL CONTRACTOR
EF	EXHAUST FAN
EL	ELEVATION
ELEC	ELECTRIC, ELECTRICAL
ELEV	ELEVATOR
EMER	EMERGENCY
EMF	ELECTROMAGNETIC FIELD
EMI	ELECTROMAGNETIC INTERFERENCE
EMT	ELECTRICAL METALLIC TUBING
EP	ELECTRIC-PNEUMATIC
(ER)	EXISTING RELOCATED
EWC	ELECTRIC WATER COOLER
(EX)	EXISTING TO REMAIN
EX	EXPLOSION PROOF
EXG	EXISTING
F	FAN
FAAP	FIRE ALARM ANNUNCIATOR PANEL
FACP	FIRE ALARM CONTROL PANEL
FL	FLOOR
FLA	FULL LOAD AMPS
FLUOR	FLUORESCENT
FS	FLOW SWITCH
FU	FUSE
FVNR	FULL VOLTAGE NON REVERSING
FVR	FULL VOLTAGE REVERSING
G	GROUND
GA	GAUGE
GC	GENERAL CONTRACTOR
GEN	GENERATOR
GF	GROUND FAULT
HP	HEAT PUMP
HP	HORSEPOWER
HPF	HIGH POWER FACTOR
HT	HEIGHT
HZ	HERTZ
IG	INDICATES RECEPTACLE TO BE ISOLATED GROUND TYPE
IN	INCH
INCAND	INCANDESCENT
INFO	INFORMATION
J	JUNCTION BOX
KAIC	THOUSAND AMPS INTERRUPTING CURRENT
KCM	1000 CIRCULAR MILLS
KVA	KILOVOLT-AMPERE
KW	KILOWATT
LAB	LABORATORY
LF	LINEAR FOOT
LG	LENGTH
LTG	LIGHTING
MAX	MAXIMUM
MC	MECHANICAL CONTRACTOR
MCB	MAIN CIRCUIT BREAKER
MECH	MECHANICAL
MEZZ	MEZZANINE
MH	MAN HOLE
MIN	MINIMUM
MISC	MISCELLANEOUS
MLO	MAIN LUGS ONLY
MSWBD	MAIN SWITCH BOARD
MTD	MOUNTED
NA	NOT APPLICABLE
NC	NORMALLY CLOSED
NEC	NATIONAL ELECTRICAL CODE
NEMA	NATIONAL ELECTRICAL MANUFACTURERS ASSOCIATION
NIC	NOT IN CONTRACT
N.O.	NORMALLY OPEN
NTS	NOT TO SCALE
P	POLE
P	PUMP
PB	PUSH BUTTON
PC	PLUMBING CONTRACTOR
PE	PNEUMATIC CONTRACTOR
PF	POWER FACTOR
PH	PHASE
PL	PLACES
PNL	PANEL
PRI	PRIMARY
PROJ	PROJECT
PTAC	PACKAGED TERMINAL AIR CONDITIONING UNIT
PTHP	PACKAGED TERMINAL HEAT PUMP
PVC	POLY VINYL CHLORIDE
RCP	RADIANT CEILING PANEL
RECP	RECEPTACLE
REF	REFERENCE
REV	REVISION
RFI	RADIO FREQUENCY INTERFERENCE
RGS	RIGID STEEL
RLA	RATED LOAD AMPS
RM	ROOM
RPM	REVOLUTIONS PER MINUTE
SATC	SUSPENDED ACOUSTICAL TILE CEILING
SD	SMOKE DAMPER
SEC	SECONDARY
SHT	SHEET
SN	SOLID NEUTRAL
SPEC	SPECIFICATION
SWBD	SWITCHBOARD
SWGR	SWITCHGEAR
TD	TIME DELAY
TYP	TYPICAL
UH	UNIT HEATER
UON	UNLESS OTHERWISE NOTED
UV	UNIT VENTILATOR
V	VOLTAGE, VOLTS
W	WATT
W	WIRE
W/	WITH
W/O	WITHOUT
WH	WALL HEATER
WH	WATER HEATER
WHM	WATT HOUR METER
WP	WEATHERPROOF
X	BY (BETWEEN DIMENSIONS)
XFMR	TRANSFORMER
Z	IMPEDANCE

McCARTHY ENGINEERING ASSOCIATES, INC.
www.McCarthy-Engineering.com
2500 East High Street, Suite 630
Pottstown, PA 19464
Phone: 610.373.8001

Project No.
230004

Revision	Date	Description	Rev. By
1	8/9/2023	ADDENDUM 1	

This document and all information and work product represented by and contained herein, is the sole and exclusive property of McCarthy Engineering Associates, Inc.. The information contained herein is licensed only for limited use by the intended recipient, and no license, permission or authority is extended, directly or implied, to any party without the express written permission of McCarthy Engineering Associates, Inc.
Copyright, 2017, McCarthy Engineering Associates, Inc. All rights reserved

555 Van Reed Road
Suite 2
Wyomissing, PA 19610
McCARTHY ENGINEERING ASSOCIATES, INC.
www.McCarthy-Engineering.com
Phone: 610.373.8001
2500 East High Street
Suite 630
Pottstown, PA 19464

SEAL:

LEGEND AND ABBREVIATIONS

" PUBLIC WORKS FACILITY "

Client: WYOMISSING BOROUGH
Location: WYOMISSING BOROUGH, BERKS COUNTY, PENNSYLVANIA
Date: JULY 19, 2023

DRAWN BY: SW	PROJ. MANAGER: NEC
PRINCIPAL: JCM	SCALE: AS NOTED

DRAWING NO. E-1.0

PROJECT NO. 230004

ISSUED FOR BID JULY 19, 2023
NOT FOR CONSTRUCTION

SITE PLAN
SCALE: 1/16" = 1'-0"

POWER KEY NOTES:

1. THE LOCATION OF THE EXISTING UTILITY POLE IS SHOWN ON CIVIL DRAWING C2.0. PROPOSED TO REPLACE THE EXISTING POLE AT THE CORNER OF NORTH 4th AND OLEY STREETS WITH AERIAL ACROSS NORTH 4th STREET WITH A NEW POLE AND RISER WITH UNDERGROUND TO CT CABINET. ALTERNATE METHOD/LOCATIONS WILL BE CONSIDERED. COORDINATION WITH THE UTILITY IS REQUIRED. ASSUMPTION IS MAKE FOR POLE MOUNTED TRANSFORMERS. GIVEN THE POTENTIAL LENGTH OF UNPROTECTED SECONDARY CONDUCTORS PRIOR TO THE SERVICE MAIN, PROVIDE ADEQUATE PROTECTION BY ENCASED IN CONCRETE OR OTHER APPROVED METHOD. AS AN ACCEPTABLE ALTERNATIVE OPTION, THE ELECTRICAL CONTRACTOR MAY PROVIDE A NEMA 3R RATED MAIN DISCONNECT MOUNTED OUTDOORS ASIDE THE CT CABINET IN LIEU OF PROTECTED ENCASED SECONDARY WIRING.

McCARTHY ENGINEERING ASSOCIATES, INC.
www.McCarthy-Engineering.com
2500 East High Street, Suite 630
Pottstown, PA 19464
Phone: 610.373.8001

Project No.
230004

Revision	Date	Description	Rev.By
1	8/9/2023	ADDENDUM 1	

This document and all information and work product represented by and contained herein, is the sole and exclusive property of McCarthy Engineering Associates, Inc.. The information contained herein is licensed only for limited use by the intended recipient, and no license, permission or authority is extended, directly or implied, to any party without the express written permission of McCarthy Engineering Associates, Inc.
Copyright, 2017, McCarthy Engineering Associates, Inc. All rights reserved

McCARTHY ENGINEERING ASSOCIATES, INC.
555 Van Reed Road
Suite 2
Wyomissing, PA 19610
www.McCarthy-Engineering.com
Phone: 610.373.8001
2500 East High Street
Suite 630
Pottstown, PA 19464

SEAL:

ELECTRICAL - EXISTING/NEW BUILDING SITE PLAN

" PUBLIC WORKS FACILITY "

Client: WYOMISSING BOROUGH
Location: WYOMISSING BOROUGH, BERKS COUNTY, PENNSYLVANIA
Date: JULY 19, 2023

DRAWN BY: SW	PROJ. MANAGER: NEC
PRINCIPAL: JCM	SCALE: AS NOTED

DRAWING NO. E-1.1 (1)

PROJECT NO. 230004

ISSUED FOR BID JULY 19, 2023
NOT FOR CONSTRUCTION

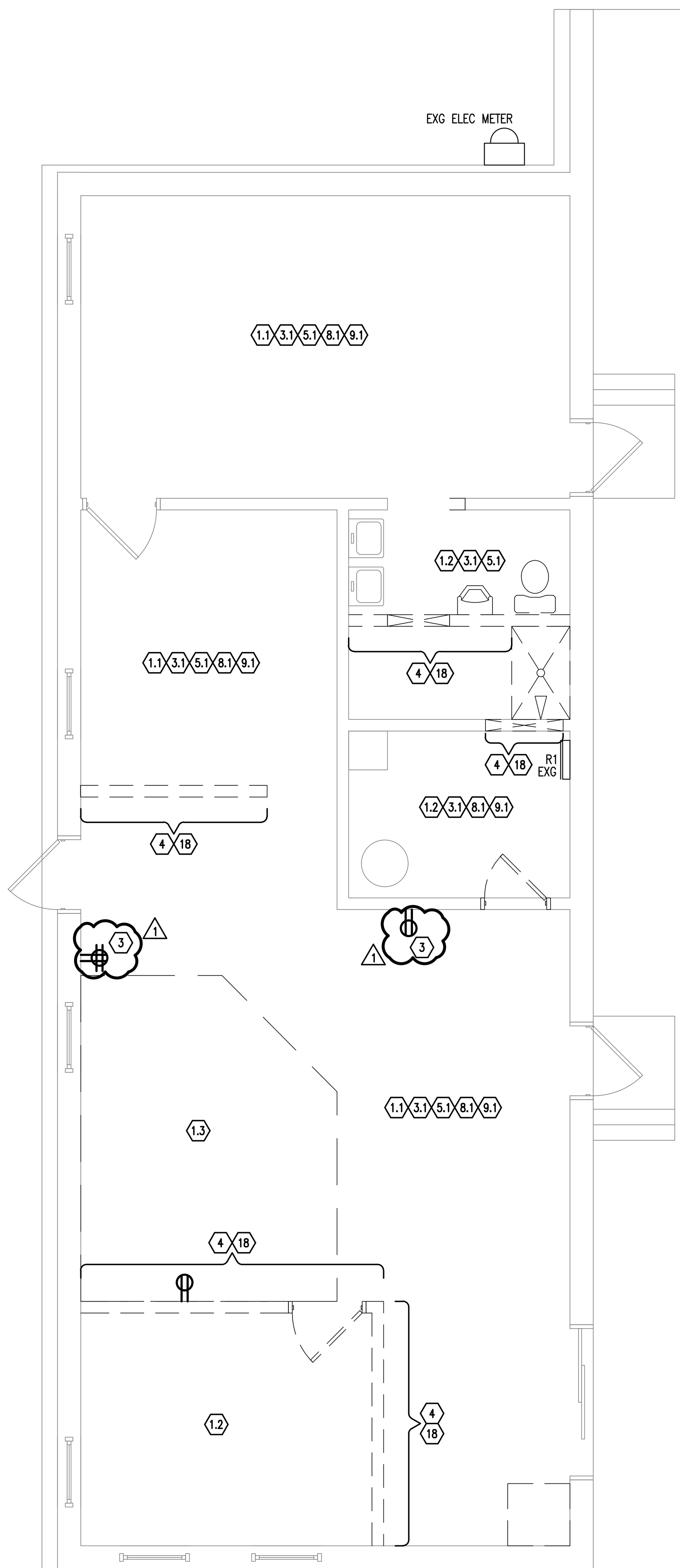

DEMOLITION PLAN
SCALE: 1/4" = 1'-0"

DEMOLITION GENERAL NOTES:

1. WHERE IT IS INDICATED THAT A CIRCUIT, CONDUIT OR WIRING IS TO BE REMOVED IN ITS ENTIRETY, THIS SHALL MEAN THAT THE WIRE, CONDUIT, HANGERS, CONNECTORS, COUPLINGS, CONTROLS, DISCONNECT SWITCHES, ETC. SHALL BE REMOVED FROM THE DEVICE TO THE SOURCE, EXCEPT THAT CONDUIT EMBEDDED IN WALLS OR FLOORS NOT BEING DEMOLISHED MAY BE ABANDONED IN PLACE AS LONG AS THE WIRE IS REMOVED AND THE CONDUIT ENDS ARE SATISFACTORILY CLOSED.
2. CIRCUITS TO EQUIPMENT OR DEVICES INDICATED TO BE REMOVED SHALL BE REMOVED IN THEIR ENTIRETY EVEN IF THE CIRCUIT OR SOURCE IS OUTSIDE THE DEFINED AREA OF DEMOLITION.
3. CIRCUITS WHICH ORIGINATE IN OR PASS THROUGH THE AREA OF DEMOLITION BUT WHICH SUPPLY LOADS OUTSIDE OF THE AREA OF DEMOLITION OR WHICH FEED EQUIPMENT IN THE AREA OF DEMOLITION WHICH IS TO REMAIN, SHALL BE RETAINED, UNLESS OTHERWISE NOTED. PORTIONS OF SUCH CIRCUITS WHICH CONFLICT WITH CLEARANCES FOR NEW CONSTRUCTION SHALL BE REMOVED AND WIRE AND CONDUIT (MATCH EXISTING TYPE AND SIZE) SHALL BE PROVIDED TO EXTEND THE CIRCUIT TO ITS ORIGINAL SOURCE AND TO MAINTAIN THE FUNCTIONALITY OF THE CIRCUIT.
4. CIRCUITS WHICH SUPPLY DEVICES BOTH INSIDE AND OUTSIDE OF THE AREA OF DEMOLITION SHALL BE REMOVED ONLY WITHIN THE AREA OF DEMOLITION. REMOVE THE CIRCUITS TO THE NEAREST JUNCTION BOX OR DEVICE OUTSIDE THE AREA OF DEMOLITION. PORTIONS OF THE CIRCUITS WHICH SUPPLY DEVICES OUTSIDE THE AREA OF DEMOLITION OR DEVICES TO REMAIN INSIDE THE AREA OF DEMOLITION SHALL REMAIN AND WIRE AND CONDUIT (MATCH EXISTING TYPE AND SIZE) SHALL BE PROVIDED TO EXTEND THE CIRCUIT TO ITS ORIGINAL SOURCE AND TO MAINTAIN THE FUNCTIONALITY OF THE CIRCUIT, UNLESS OTHERWISE NOTED.
5. EXISTING PANELBOARDS AND THEIR FEEDER CIRCUITS SHALL BE RETAINED, UNLESS OTHERWISE NOTED.
6. DRAWING DEMOLITION NOTES LISTED UNDER THE DEMOLITION AREA IDENTIFICATION SHALL APPLY TO ALL ROOMS/AREAS WITHIN THE AREA OF DEMOLITION. OTHER INDIVIDUAL DRAWING DEMOLITION NOTES ARE IN ADDITION TO THOSE UNDER THE AREA IDENTIFICATION AND APPLY ONLY TO INDIVIDUAL ROOMS OR EQUIPMENT.
7. ABANDONED WIRE, CONDUIT, DEVICES AND CIRCUITS IN THE AREA OF DEMOLITION OR INDIVIDUALLY IDENTIFIED SHALL BE REMOVED IN THEIR ENTIRETY.
8. OWNER EQUIPMENT SHALL BE RETURNED TO OWNER, UNLESS OTHERWISE DIRECTED.
9. CONTRACTOR SHALL FIELD VERIFY QUANTITY AND LOCATION OF ALL WIRING DEVICES PRIOR TO BID. ANY ADDITIONAL DEVICES LOCATED SHALL BE TREATED THE SAME AS OTHER DEVICES IN THE SAME AREA.
10. NON-POWER WIRING IN GOOD CONDITION MAY BE PULLED BACK FROM DEVICES BEING REMOVED AND WIRING MAY BE REUSED FOR NEW DEVICES WHERE WIRING LENGTH IS NO LONGER THAN THE ORIGINAL LENGTH. WIRING SHALL NOT BE SPLICED. WIRING WHICH CANNOT BE REUSED SHALL BE REMOVED IN ITS ENTIRETY.
11. DEVICE BOXES WITH USABLE CONDUIT TO ACCESSIBLE SPACES LOCATED IN THE SAME LOCATION AS NEW DEVICES MAY BE REUSED WITH NEW WIRING AND DEVICES. DEVICE BOXES NOT BEING USED AND LOCATED IN WALLS NOT BEING REMOVED MAY REMAIN BUT MUST BE CLOSED WITH A BLANK COVERPLATE.
12. NOT ALL KEYNOTES ARE BEING USED.

DEMOLITION KEYNOTES:

1. REMOVE ALL LIGHT FIXTURES, EMERGENCY LIGHT FIXTURES, EXIT SIGNS, LIGHT SWITCHES, LIGHT CONTROLS AND LIGHTING CIRCUITS IN THEIR ENTIRETY, UNLESS OTHERWISE NOTED.
   - 1.1. LIGHTING AND LIGHT CONTROLS ARE EXISTING TO REMAIN.
   - 1.2. REMOVE SWITCH AND RELOCATE SWITCH DEVICE BOX TO LOCATION AS SHOWN ON NEW PLAN. RETAIN FIXTURES AND CIRCUIT IN ROOM.
   - 1.3. REMOVE FIXTURE WHIPS FROM FIXTURES OUTSIDE OF THIS DASHED BOX.
2. REMOVE AND STORE THE LIGHT FIXTURES. REMOVE INTERCONNECTING WIRING AND SWITCH CIRCUITS. RETAIN THE BRANCH CIRCUIT FOR REUSE DURING CONSTRUCTION.
3. REMOVE ALL RECEPTACLES, DEVICE BOXES AND RECEPTACLE CIRCUITS IN THEIR ENTIRETY, UNLESS OTHERWISE NOTED.
   - 3.1. RECEPTACLES ARE EXISTING TO REMAIN.
4. REMOVE THE RECEPTACLES, DEVICE BOXES AND RECEPTACLE CIRCUIT TO THE NEXT DEVICE(S) TO REMAIN. RETAIN THE BRANCH CIRCUITS FOR REUSE DURING CONSTRUCTION.
5. REMOVE ALL FIRE ALARM SYSTEM DEVICES, DEVICE BOXES AND FIRE ALARM CIRCUITS IN THEIR ENTIRETY, UNLESS OTHERWISE NOTED.
   - 5.1. ALL FIRE ALARM SYSTEM DEVICES ARE EXISTING TO REMAIN.
6. REMOVE AND STORE FIRE ALARM SYSTEM DEVICE(S). REMOVE FIRE ALARM CIRCUITS TO NEXT DEVICE(S) TO REMAIN. FIRE ALARM CIRCUITS MAY BE REUSED AS DESCRIBED BY THE GENERAL DEMOLITION NOTES.
7. REMOVE ALL SECURITY DEVICES, DEVICE BOXES AND SECURITY CIRCUITS IN THEIR ENTIRETY, UNLESS OTHERWISE NOTED.
8. REMOVE ALL TELEPHONE OUTLETS, DEVICE BOXES AND TELEPHONE CIRCUITS IN THEIR ENTIRETY, UNLESS OTHERWISE NOTED.
   - 8.1. ALL TELEPHONE OUTLETS, DEVICE BOXES AND TELEPHONE CIRCUITS ARE EXISTING TO REMAIN.
9. REMOVE ALL LOCAL AREA NETWORK DEVICES, DEVICE BOXES AND LOCAL AREA NETWORK CIRCUITS IN THEIR ENTIRETY, UNLESS OTHERWISE NOTED.
   - 9.1. ALL LOCAL AREA NETWORK DEVICES, DEVICE BOXES AND LOCAL AREA NETWORK CIRCUITS ARE EXISTING TO REMAIN.
10. REMOVE ALL SOUND SYSTEM SPEAKERS, SPEAKER BOXES, VOLUME CONTROLS AND SOUND SYSTEM CIRCUITS IN THEIR ENTIRETY, UNLESS OTHERWISE NOTED.
11. REMOVE ALL CATV OUTLETS, DEVICE BOXES AND CATV CIRCUITS IN THEIR ENTIRETY, UNLESS OTHERWISE NOTED.
12. REMOVE IN THEIR ENTIRETY ALL CIRCUITS TO MECHANICAL AND/OR PLUMBING EQUIPMENT WHICH IS BEING REMOVED. SEE MECHANICAL AND PLUMBING DRAWINGS FOR LOCATION AND DEFINITION OF EQUIPMENT TO BE REMOVED.
13. REMOVE KITCHEN SERVING EQUIPMENT, OWNER'S EQUIPMENT, ETC. AND THEIR CIRCUITS IN THEIR ENTIRETY, EXCEPT WHERE OTHERWISE NOTED. VERIFY OWNER EQUIPMENT TO BE REMOVED WITH OWNER PRIOR TO START OF DEMOLITION.
14. REMOVE ALL PROJECTORS, PROJECTOR SCREENS AND THEIR CIRCUITS IN THEIR ENTIRETY, UNLESS OTHERWISE NOTED.
15. REMOVE IN THEIR ENTIRETY ALL CIRCUITS AND CONTROLS FOR ELEVATORS TO ALLOW REMOVAL OF THE ELEVATORS.
16. REMOVE CIRCUIT FOR EXISTING EQUIPMENT EXCEPT THAT REUSABLE PORTIONS OF CONDUIT IN GOOD CONDITION MAY BE REUSED FOR NEW EQUIPMENT. REMOVE PORTIONS OF CIRCUIT NOT REUSED IN ITS ENTIRETY.
17. AFTER OTHER DEMOLITION IS COMPLETE, DISCONNECT THE PANEL FEEDER CIRCUIT AND ALL REMAINING BRANCH CIRCUITS TO AN ACCESSIBLE LOCATION BUT RETAIN FOR EXTENSION TO NEW PANEL LOCATION AS PART OF NEW WORK.
18. REMOVE AND/OR RELOCATE DEVICES AND CIRCUITS IN/ON WALL OR NEW DOOR OPENING TO ALLOW WALL REMOVAL.

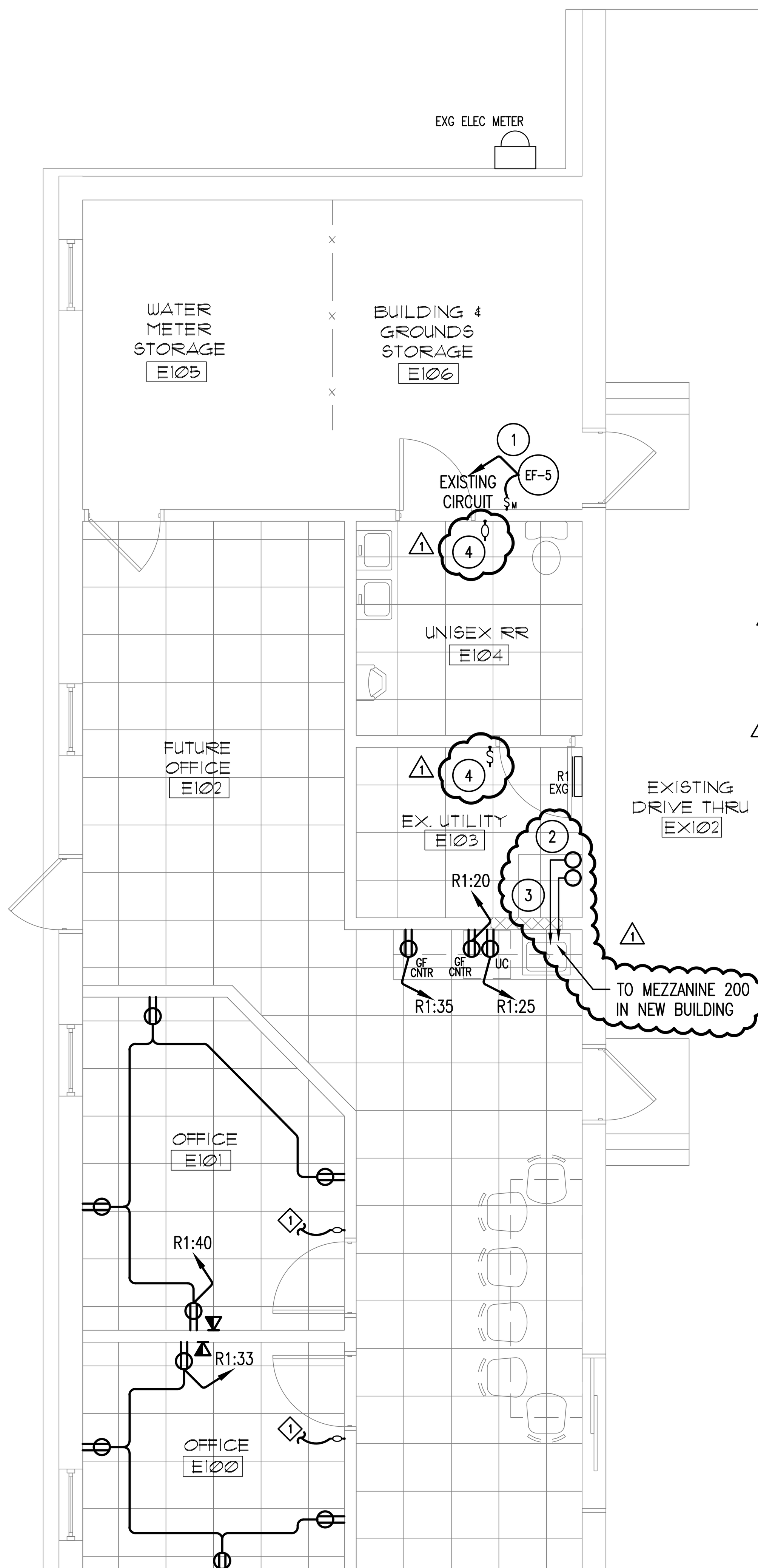

POWER PLAN
SCALE: 1/4" = 1'-0"

△1

MECHANICAL SCHEDULE												
				ELECTRICAL								
REF NO	MANUFACTURER	MODEL NUMBER	LOCATION	HP	WATTS	VOLTS	PHASE	HERTZ	MCA	MOCP	REMARKS
EF-5	PENN-BARRY	Z8S	EXISTING BUILDING	-	77	120	1	60	-	20	
NOTES: 1)											

POWER GENERAL NOTES:

1. THIS FACILITY IS BEING CONSTRUCTED WITH OPEN CEILING SPACES IN MANY AREAS. WHILE IT IS UNDERSTOOD THAT CONDUIT, CABLE AND EQUIPMENT WILL BE VISIBLE, IT IS THE INTENT OF THIS DESIGN THAT ALL SUCH EQUIPMENT, MATERIAL, CIRCUITS, CABLES, ETC. BE INSTALLED IN AN AESTHETICALLY PLEASING MANNER. ALL CIRCUITS SHALL BE ROUTED PARALLEL, PERPENDICULAR AND/OR PLUMB TO THE BUILDING STRUCTURE AND SHALL BE TIGHT TO ROOF/FLOOR DECKS, DUCTS, JOISTS, COLUMN, ETC. ALL INSTALLATION TECHNIQUES SHALL BE REVIEWED WITH AND APPROVED BY THE OWNER. THE CONTRACTOR SHALL INCLUDE CONTINGENCY IN HIS BID FOR ANY ADDITIONAL EFFORT OR WORK ABOVE NORMAL.
2. BOXES, ENCLOSURES AND EQUIPMENT WHICH ARE NOT AESTHETICALLY PLEASING MAY HAVE TO BE LOCATED ABOVE CEILINGS OR IN "OUT OF THE AREA" HIDDEN SPACES. THE CONTRACTOR SHALL INCLUDE CONTINGENCY IN HIS BID FOR ANY ADDITIONAL EFFORT OR WORK ABOVE NORMAL.
3. INSTALL BACKBOX AND STUB UP 3/4" EMT CONDUIT TO ABOVE CEILING FOR EACH COMMUNICATION / DATA DEVICE.
4. INSTALL BACKBOX AND STUB UP 3/4" EMT CONDUIT TO ABOVE DROP CEILING FOR EACH CARD READER DEVICE.
5. SEE MECHANICAL DRAWINGS FOR MECHANICAL EQUIPMENT SCHEDULES.

LIGHTING KEY NOTES:

1. ~~CONNECT EXISTING FIXTURES TO NEW SWITCH.~~
△1 DELETED

△1
POWER KEY NOTES:

1. INSTALL SWITCH ACCESSIBLE LOCATION ABOVE DROP CEILING. REUSE CIRCUIT FROM ORIGINAL EXISTING EXHAUST FAN.
2. 2 3" PVC CONDUITS TERMINATE IN ROOM SHOWN. CONSULT w/ OWNER AND/OR ARCHITECT FOR EXACT LOCATION FOR THOSE TERMINATIONS.
3. DETERMINE IN FIELD A FEASIBLE RUN TO EXTERIOR OF EXISTING BUILDING AND RUN UNDERGROUND MIN. 24" DEPTH TO NEW BUILDING. REFER TO CIVIL DRAWINGS FOR DISTANCE.
4. REUSE EXISTING SWITCH LEG AND ROOM'S LIGHTING CIRCUIT.

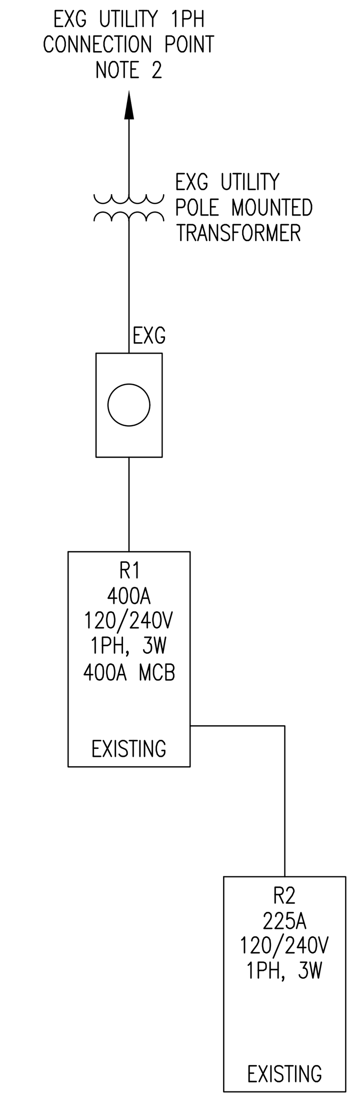

EXISTING SINGLE LINE DIAGRAM
SCALE: NONE

SINGLE LINE/SERVICE NOTES:

1. CONTRACTOR SHALL PROVIDE ALL MATERIAL, LABOR AND WORK REQUIRED FOR A NEW ELECTRICAL SERVICE AS DESCRIBED IN THE LOCAL UTILITY SERVICE AND INSTALLATION REGULATIONS. ANY LOCAL UTILITY COMPANY CHARGES FOR PROVISION OF ELECTRICAL SERVICE SHALL BE INCLUDED IN THE CONTRACTOR'S BASE PRICE. AS A MINIMUM, THE INSTALLATION SHALL MEET THE SERVICE AND INSTALLATION REGULATIONS OF THE LOCAL UTILITY.
2. EXISTING SERVICE TO EXISTING BUILDING SHALL BE RETAINED.
3. CONDUCTORS OF THIS CIRCUIT ARE OVERSIZED TO COMPENSATE FOR VOLTAGE DROP. PROVIDE INCREASED SIZE LUGS AS POSSIBLE BUT WHERE THE CONDUCTOR SIZE EXCEEDS THE MAXIMUM CAPACITY OF ANY EQUIPMENT TERMINATION LUGS AVAILABLE, PROVIDE A JUNCTION BOX WITH SPLICE WITHIN TEN FEET OF THE TERMINATION AND REDUCE THE CONDUCTOR SIZE TO THE LARGEST SIZE WHICH CAN BE ACCOMMODATED BY THE EQUIPMENT.
4. ALL FEEDERS AND SERVICE ENTRANCE CONDUCTORS AND CONDUITS ARE EXISTING TO REMAIN.

△1 MOVED

PANEL R1 SCHEDULE

LOCATION: UTILITY E103
EXISTING PANEL
PHASE: 1 WIRE: 3 VOLTS: 240/120
CURRENT RATING: 400 AMP - MAIN BREAKER
22 KAIC

CKT NO	DESCRIPTION	BREAKER TRIP	BREAKER POLE	CKT	KVA LOADS A	KVA LOADS B	CKT	BREAKER POLE	BREAKER TRIP	DESCRIPTION	CKT NO
1	LTS WATER/SEWER 104	20	1	0.72	1.44		0.72	1	20	SUPERVISOR 105 & UTIL 103 LTS	2
3	SUPERVISOR 105 & UTIL 103 LTS	20	1	0.72		1.44	0.72	1	20	LTS STORAGE 109	4
5	LTS STORAGE 109	20	1	0.96	1.92		0.96	1	20	RECP - 105 & 103	6
7	ELEC WATER COOLER	20	1	0.99		1.99	1.00	1	20	VENDING & LUNCH RECP	8
9	TOILET & SHOWER RECP	20	1	1.00	2.00		1.00	1	20	WTR,SEWER,LUNCH,EXT RECP	10
11	WTR,SEWER,SUPERVIS RECP	20	1	1.00		2.00	1.00	1	20	SUPERV 105 RECP	12
13	SOTR 109 RECP	20	1	1.20	2.10		0.90	1	20	LTS STOR 109	14
15	BASEBOARD HEAT 109	20	-	3.00		4.20	1.20	1	20	BASEB HEAT WTR,SEWR,104,102	16
17	SPARE	20	2	0.00	0.00		0.00	1	20	SPARE	18
19	"	-	-	0.00		0.18	0.18	1	**20**	**RECEPT - KITCHENETTE**	20
21	SPARE	20	-	0.00	3.72		3.72	-	30	YARD LTS EAST WALL	22
23	SECURITY LITE N,S,W, EXT;GATE	30	-	1.44		5.16	3.72	1	20	SPARE	24
25	**REFRIG - KITCHENETTE**	**20**	1	0.50	1.50		1.00	1	20	TELEPH RECP,COFFEE	26
27	SPARE	20	1	0.00		1.08	1.08	1	20	EXECUTONE SYS	28
29	SPARE	20	1	0.00	0.00		0.00	1	20	SPARE	30
31	SPARE	20	1	0.00		0.00	0.00	1	20	SPARE	32
33	RECEPT - OFFICE E100	20	1	0.36	0.36		0.00	1	15	SPARE	34
35	**RECEPT - KITCHENETTE**	**20**	1	0.18		4.68	4.50	2	30	CONDENS UNIT OUTSIDE	36
37	PANEL R2	225	2	35.96	40.46		4.50	-	-	"	38
39	"	-	-	36.21		36.57	0.36	1	**20**	**RECEPT - OFFICE E101**	40
		CIRCUIT TOTALS:		84.24			26.56				
		PHASE TOTALS:			53.50	57.30					
		TOTAL CONNECTED LOAD:				111	KVA				
		TOTAL CONNECTED LOAD:				462	AMP				

*BREAKER LOCKON DEVICE
**SHUNT TRIP BREAKER
***HACR BREAKER
****BREAKER PADLOCK OFF DEVICE

NOTES:
1) BOLD INDICATES NEW CIRCUIT AND/OR BREAKER

McCARTHY ENGINEERING ASSOCIATES, INC.
www.McCarthy-Engineering.com
2500 East High Street, Suite 630
Pottstown, PA 19464
Phone: 610.373.8001

Project No.
230004

Revision	Date	Description	Rev.By
1	8/9/2023	ADDENDUM 1	

This document and all information and work product represented by and contained herein, is the sole and exclusive property of McCarthy Engineering Associates, Inc.. The information contained herein is licensed only for limited use by the intended recipient, and no license, permission or authority is extended, directly or implied, to any party without the express written permission of McCarthy Engineering Associates, Inc.
Copyright, 2017, McCarthy Engineering Associates, Inc. All rights reserved

555 Van Reed Road
Suite 2
Wyomissing, PA 19610
McCARTHY ENGINEERING ASSOCIATES, INC.
www.McCarthy-Engineering.com
Phone: 610.373.8001
2500 East High Street
Suite 630
Pottstown, PA 19464

SEAL:

EXISTING BUILDING
FIRST FLOOR PLAN

" PUBLIC WORKS FACILITY "

Client: WYOMISSING BOROUGH
Location: WYOMISSING BOROUGH, BERKS COUNTY, PENNSYLVANIA
Date: JULY 19, 2023

DRAWN BY: SW	PROJ. MANAGER: NEC
PRINCIPAL: JCM	SCALE: AS NOTED

DRAWING NO.
E-2.0

PROJECT NO.
230004

ISSUED FOR BID JULY 19, 2023
NOT FOR CONSTRUCTION

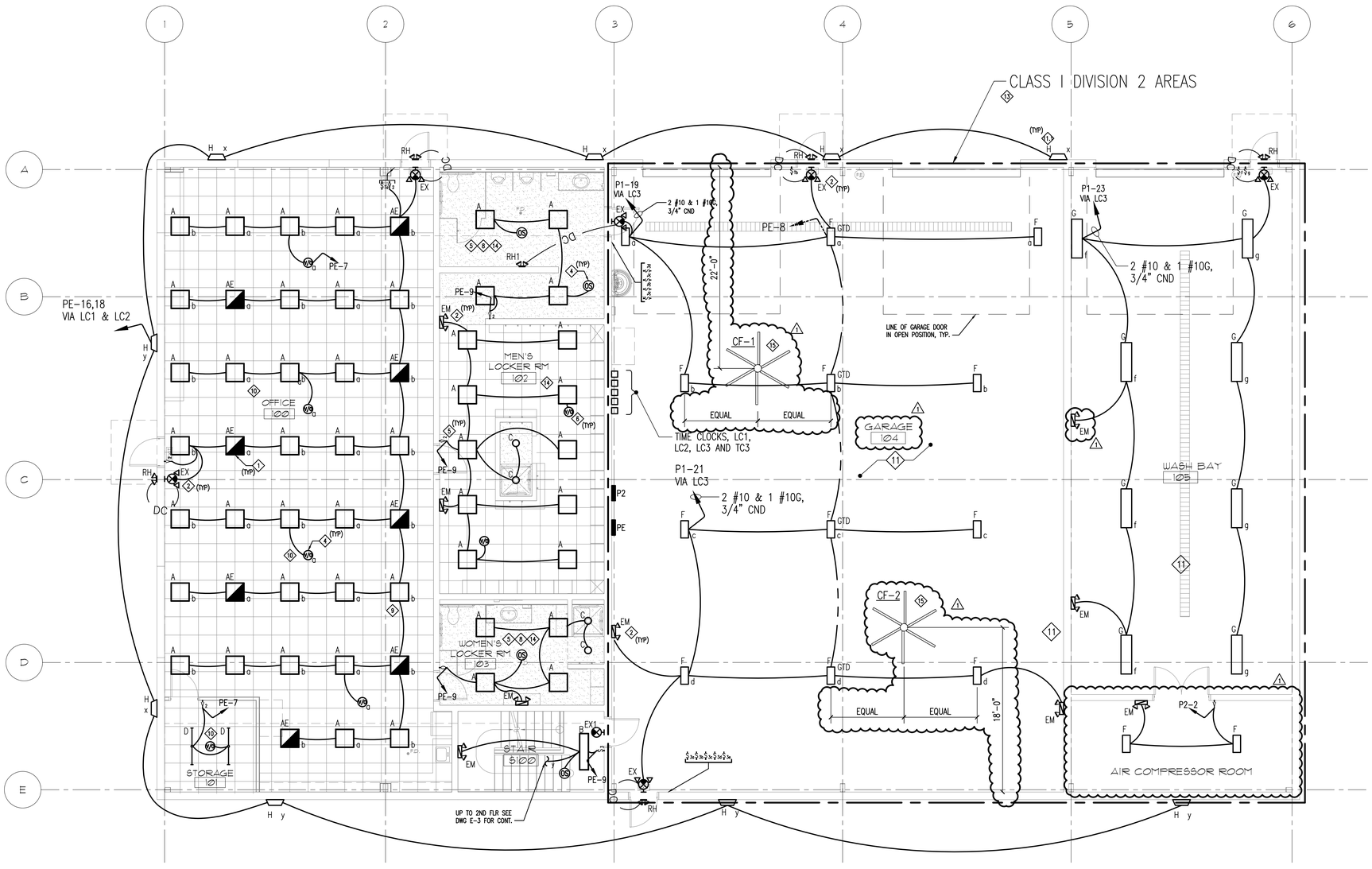

LIGHTING PLAN
SCALE: 3/16" = 1'-0"

LIGHTING NOTES:

1. FOR NEW WORK LIGHTING NOTES SEE DRAWING E-3.

LIGHTING KEY NOTES: ⟨1⟩

1. CONNECT ALL EMERGENCY LIGHT FIXTURE EMERGENCY BALLASTS TO THE UNSWITCHED HOT LEG OF THE AREA LIGHTING CIRCUIT AND THE NORMAL BALLASTS TO THE SWITCHED HOT LEG SUCH THAT FIXTURES ARE SWITCHED WITH NORMAL FIXTURES BUT ARE ON AT APPROXIMATELY FULL BRIGHTNESS ON LOSS OF POWER.
2. CONNECT ALL WALL BATTERY PACKS AND EXIT SIGNS TO AN UNSWITCHED HOT LEG OF THE AREA LIGHTING CIRCUIT.
3. CONNECT LIGHT SWITCHES DOWNSTREAM OF OCCUPANCY SENSORS. SEE OCCUPANCY SENSOR SYSTEM ELEMENTARY DIAGRAM (TYPICAL) BELOW.
4. LOCATE CEILING OCCUPANCY SENSORS WITHIN 16 FEET OF THE ROOM ENTRANCE(S). COORDINATE SENSOR LOCATION WITH ANY SURFACE OR PENDANT MOUNTED FIXTURES/DEVICES SUCH THAT THE LINE OF SIGHT BETWEEN THE SENSOR AND ENTRANCE IS NOT OBSTRUCTED.
5. CONNECT MOMENTARY OCCUPANCY/VACANCY WALL SWITCH TO OCCUPANCY OR VACANCY SENSOR SYSTEM. SEE OCCUPANCY OR VACANCY SENSOR SYSTEM ELEMENTARY DIAGRAM (TYPICAL) ON DRAWING E-5.0.
6. LINK SENSORS WITH THE SAME DESIGNATOR SUCH THAT ANY ONE SENSOR TURNS ON ALL FIXTURES IN THE AREA.
7. VACANCY CONTROL WITH DIMMING IS REQUIRED IN THIS CONFERENCE ROOM. PROVIDE OCCUPANCY/VACANCY SENSORS, DIMMERS/SWITCHES AND THREE RELAY DIGITAL ROOM CONTROLLERS AS SHOWN ON THE DRAWINGS. SEE THE DAYLIGHTING/VACANCY CONTROL SYSTEM ELEMENTARY DIAGRAM (TYPICAL) ON DRAWING E-6. THE FIRST TWO RELAYS SHALL CONTROL THE ROOM FIXTURES. THE THIRD RELAY SHALL CONTROL THE FRONT CONFERENCE ROOM FIXTURES WITH ALL FIXTURES BEING MANUAL ON.
8. OCCUPANCY CONTROL IS REQUIRED IN RESTROOMS. PROVIDE CEILING SENSOR AS SHOWN ON THE DRAWINGS. ALL LIGHT FIXTURES SHALL BE AUTO ON. SEE THE OCCUPANCY SENSOR SYSTEM ELEMENTARY DIAGRAM (TYPICAL) ON DRAWING E-5.0.
9. ALTERNATE CORRIDOR LIGHTING FIXTURES SUCH THAT ONLY EVERY OTHER FIXTURE IS CONTROLLED (AUTO ON) BY THE OCCUPANCY SENSOR (AUTOMATIC LIGHTING). LOCAL SWITCHES AND THE TIME CLOCK SHALL CONTROL BOTH STANDARD AND AUTOMATIC LIGHTING. SEE TIME CLOCK LIGHTING CONTROL WIRING DIAGRAM (TYPICAL) ON DRAWING E-5.0.
10. PROVIDE DUAL LEVEL SWITCHING BY CONNECTING APPROXIMATELY HALF THE ROOM FIXTURES TO EACH OF THE TWO POLES OF THE AUTOMATIC CEILING SENSOR. ALTERNATE FIXTURES IN BOTH DIRECTIONS UNLESS OTHERWISE NOTED. HALF THE FIXTURES SHALL BE AUTO ON AND HALF THE FIXTURES SHALL BE MANUAL ON. SEE THE DUAL LEVEL VACANCY/OCCUPANCY SENSOR SYSTEM ELEMENTARY DIAGRAM (TYPICAL) ON DRAWING E-5.0.
11. PROVIDE TIME CLOCK CONTROL. REFER TO E-5.0 FOR WIRING DIAGRAMS
    11.1. SEE TIME CLOCK LIGHTING CONTROL WIRING DIAGRAM
    11.2. SEE SITE LIGHTING CONTROL WIRING DIAGRAM
12. AIM FLOOD LIGHT TO ILLUMINATE AREA IN FRONT OF SALT SHED.
13. ALL REPAIR/SERVICE AREAS PER NEC 511 SHALL BE CLASS I DIVISION 2 HAZARDOUS AREAS FROM THE FLOOR TO 18 INCHES ABOVE FLOOR (AND FROM THE CEILING TO 18 INCHES BELOW THE CEILING WHERE LIGHTER-THAN-AIR FUELED VEHICLES ARE REPAIRED/STORED). PITS AND WORK AREAS BELOW THE FLOOR SHALL BE CLASSIFIED AS CLASS 1 DIVISION 1. ALL WIRING AND CIRCUITS IN OR ROUTED THROUGH THESE AREAS SHALL CONFORM TO NEC 501 AND SHALL HAVE MATERIALS AND CONDUIT SEALS PER NEC 501. ALL RECEPTACLES, EQUIPMENT AND DEVICES SHALL BE MOUNTED ABOVE OR BELOW THESE AREAS TO AVOID REQUIREMENT FOR SPECIAL EQUIPMENT. ALL CONDUIT IN THE HAZARDOUS AREAS SHALL BE RGS, IMC OR EMT WITH COMPRESSION FITTINGS. CONDUIT ABOVE/BELOW HAZARDOUS AREAS MAY BE EMT WITH COMPRESSION COUPLINGS. ALL 15A AND 20A RECEPTACLES SHALL BE GFCI TYPE RECEPTACLES. ALL RECEPTACLES SHALL BE MOUNTED AT 48" AFF. CIRCUITS FOR OTHER EQUIPMENT MAY BE RUN THROUGH THIS AREA, BUT THEY SHALL MAINTAIN STRICT COMPLIANCE WITH THE METHODS OF NEC 501.
14. CEILING GRID ARE NOT SHOWN. LAY FIXTURES ON CEILING GRID NEAR WHERE THEY ARE SHOWN ON PLAN.
15. CONSULT w/ ARCHITECT AND/OR OWNER THE EXACT LOCATION FOR THE CEILING FANS. REFER TO POWER PLAN FOR CIRCUITS

⟨1⟩

FIXTURE SCHEDULE

ENVIRONMENT: CR - CORROSIVE; DL - DAMP LOCATION; HZ - HAZARDOUS; IN - INDOOR; WL - WET LOCATION
MOUNTING TYPE/HEIGHT: B - BOLLARD; CH - CHAIN HUNG; P - PENDANT; PL - POLE; R - RECESSED; S - SURFACE; T - TRACK; W - WALL; CLG HT - CEILING HEIGHT

TYPE	MANUFACTURER	CAT NO	DESCRIPTION	LAMPS NO	LAMPS TYPE	LAMPS ENVIR	MNTG TYPE	MNTG HEIGHT	VOLTS	LOAD IN WATTS	REMARKS
A	COLUMBIA	LCAT22-35LWG-EDU	2X2 TROFFER	-	2,700 LUMEN LED	IN	R	CLG HT	UNV	23	
AE	COLUMBIA	LCAT22-35LWG-EDU-ELL14	2X2 TROFFER w/ BATTERY PACK	-	2,700 LUMEN LED	IN	R	CLG HT	UNV	23	
B	COLUMBIA	LAW4-35XW-EDU	4' WRAPAROUND	-	2,300 LUMEN LED	IN	S	CLG HT	UNV	19	
C	PRESCOLITE	LC4SL-4LCSL10L35K8WT	4" DOWNLIGHT	-	1,000 LUMEN LED	IN	R	CLG HT	UNV	14	
D	COLUMBIA	MPS4-35/W-CW-EU	4' STRIP	-	3,200 LUMEN LED	IN	CH	*	UNV	27	NOTE 2
F	COLUMBIA	CLB2-40MM-W-EDU	2' HIGH BAY	-	14,000 LUMEN LED	IN	CH	16' 0"	UNV	100	NOTE 2
G	COLUMBIA	LXEW4-40M-FAW-EU	4' ENCLOSED HIGH BAY	-	16,000 LUMEN LED	WL	CH	16' 0"	UNV	122	NOTE 2
H	HUBBELL	PVL3-180L-604K7-U-*-20F	WALL PACK	-	6,800 LUMEN LED	WL	W	13' 6"	UNV	55	NOTES 1 & 2
J	KIM	KFL3-60L-135-4K7-WF-UNV-Y-*	FLOOD LIGHT	-	16,000 LUMEN LED	WL	W	*	UNV	135	NOTES 1 & 2
EX	EMERGI-LITE	ELXN400R-2SQLR-AD	EXIT SIGN W/ HEADS & REMOTE CAPACITY	-	LED	IN	W	7' 6"	UNV	8	
EX1	EMERGI-LITE	WPREMDNR	EXIT SIGN	-	LED	IN	W	7' 6"	UNV	3	
EM	EMERGI-LITE	12JSM36-210LG-AD	BATTERY PACK	-	LG	IN	W	7' 6"	UNV	36	
RH	EMERGI-LITE	EF44D-LEDWP	REMOTE HEADS	-	LED	WL	W	7' 6"	4	4	
RH1	EMERGI-LITE	EF10D(LG)	REMOTE HEADS	-	LG	IN	W	7' 6"	12	4	

*See REMARKS section.
NOTES:
1. VERIFY FIXTURE TRIM, COLOR AND/OR FINISH WITH THE ARCHITECT.
2. COORDINATE MOUNTING HEIGHT WITH OWNER/ARCHITECT.

ISSUED FOR BID JULY 19, 2023
NOT FOR CONSTRUCTION

McCARTHY ENGINEERING ASSOCIATES, INC.
www.McCarthy-Engineering.com
2500 East High Street, Suite 630
Pottstown, PA 19464
Phone: 610.373.8001

Project No.
230004

Revision	Date	Description	Rev.By
1	8/9/2023	ADDENDUM 1	

This document, and all information and work, product represented by and contained herein, is the sole and exclusive property of McCarthy Engineering Associates, Inc. and is not to be used, published, or disclosed to any person, firm or corporation without the prior written permission of, and for any purpose not expressly permitted by, McCarthy Engineering Associates, Inc. Any unauthorized use, disclosure, sale or purchase of this document, and all information and work, product represented by and contained herein, is the sole and exclusive property of McCarthy Engineering Associates, Inc. and is not to be used, published, or disclosed to any person, firm or corporation without the prior written permission of, and for any purpose not expressly permitted by, McCarthy Engineering Associates, Inc. Any unauthorized use, disclosure, sale or purchase of this document, and all information and work, product represented by and contained herein, is the sole and exclusive property of McCarthy Engineering Associates, Inc. and is not to be used, published, or disclosed to any person, firm or corporation without the prior written permission of, and for any purpose not expressly permitted by, McCarthy Engineering Associates, Inc. Any unauthorized use, disclosure, sale or purchase of this document, and all information and work, product represented by and contained herein, is the sole and exclusive property of McCarthy Engineering Associates, Inc. and is not to be used, published, or disclosed to any person, firm or corporation without the prior written permission of, and for any purpose not expressly permitted by, McCarthy Engineering Associates, Inc. Any unauthorized use, disclosure, sale or purchase of this document, and all information and work, product represented by and contained herein, is the sole and exclusive property of McCarthy Engineering Associates, Inc. and is not to be used, published, or disclosed to any person, firm or corporation without the prior written permission of, and for any purpose not expressly permitted by, McCarthy Engineering Associates, Inc. Any unauthorized use, disclosure, sale or purchase of this document, and all information and work, product represented by and contained herein, is the sole and exclusive property of McCarthy Engineering Associates, Inc. and is not to be used, published, or disclosed to any person, firm or corporation without the prior written permission of, and for any purpose not expressly permitted by, McCarthy Engineering Associates, Inc. Any unauthorized use, disclosure, sale or purchase of this document, and all information and work, product represented by and contained herein, is the sole and exclusive property of McCarthy Engineering Associates, Inc. and is not to be used, published, or disclosed to any person, firm or corporation without the prior written permission of, and for any purpose not expressly permitted by, McCarthy Engineering Associates, Inc. Any unauthorized use, disclosure, sale or purchase of this document, and all information and work, product represented by and contained herein, is the sole and exclusive property of McCarthy Engineering Associates, Inc. and is not to be used, published, or disclosed to any person, firm or corporation without the prior written permission of, and for any purpose not expressly permitted by, McCarthy Engineering Associates, Inc. Any unauthorized use, disclosure, sale or purchase of this document, and all information and work, product represented by and contained herein, is the sole and exclusive property of McCarthy Engineering Associates, Inc. and is not to be used, published, or disclosed to any person, firm or corporation without the prior written permission of, and for any purpose not expressly permitted by, McCarthy Engineering Associates, Inc. Any unauthorized use, disclosure, sale or purchase of this document, and all information and work, product represented by and contained herein, is the sole and exclusive property of McCarthy Engineering Associates, Inc. and is not to be used, published, or disclosed to any person, firm or corporation without the prior written permission of, and for any purpose not expressly permitted by, McCarthy Engineering Associates, Inc. Any unauthorized use, disclosure, sale or purchase of this document, and all information and work, product represented by and contained herein, is the sole and exclusive property of McCarthy Engineering Associates, Inc. and is not to be used, published, or disclosed to any person, firm or corporation without the prior written permission of, and for any purpose not expressly permitted by, McCarthy Engineering Associates, Inc. Any unauthorized use, disclosure, sale or purchase of this document, and all information and work, product represented by and contained herein, is the sole and exclusive property of McCarthy Engineering Associates, Inc. and is not to be used, published, or disclosed to any person, firm or corporation without the prior written permission of, and for any purpose not expressly permitted by, McCarthy Engineering Associates, Inc. Any unauthorized use, disclosure, sale or purchase of this document, and all information and work, product represented by and contained herein, is the sole and exclusive property of McCarthy Engineering Associates, Inc. and is not to be used, published, or disclosed to any person, firm or corporation without the prior written permission of, and for any purpose not expressly permitted by, McCarthy Engineering Associates, Inc. Any unauthorized use, disclosure, sale or purchase of this document, and all information and work, product represented by and contained herein, is the sole and exclusive property of McCarthy Engineering Associates, Inc. and is not to be used, published, or disclosed to any person, firm or corporation without the prior written permission of, and for any purpose not expressly permitted by, McCarthy Engineering Associates, Inc. Any unauthorized use, disclosure, sale or purchase of this document, and all information and work, product represented by and contained herein, is the sole and exclusive property of McCarthy Engineering Associates, Inc. and is not to be used, published, or disclosed to any person, firm or corporation without the prior written permission of, and for any purpose not expressly permitted by, McCarthy Engineering Associates, Inc. Any unauthorized use, disclosure, sale or purchase of this document, and all information and work, product represented by and contained herein, is the sole and exclusive property of McCarthy Engineering Associates, Inc. and is not to be used, published, or disclosed to any person, firm or corporation without the prior written permission of, and for any purpose not expressly permitted by, McCarthy Engineering Associates, Inc. Any unauthorized use, disclosure, sale or purchase of this document, and all information and work, product represented by and contained herein, is the sole and exclusive property of McCarthy Engineering Associates, Inc. and is not to be used, published, or disclosed to any person, firm or corporation without the prior written permission of, and for any purpose not expressly permitted by, McCarthy Engineering Associates, Inc. Any unauthorized use, disclosure, sale or purchase of this document, and all information and work, product represented by and contained herein, is the sole and exclusive property of McCarthy Engineering Associates, Inc. and is not to be used, published, or disclosed to any person, firm or corporation without the prior written permission of, and for any purpose not expressly permitted by, McCarthy Engineering Associates, Inc. Any unauthorized use, disclosure, sale or purchase of this document, and all information and work, product represented by and contained herein, is the sole and exclusive property of McCarthy Engineering Associates, Inc. and is not to be used, published, or disclosed to any person, firm or corporation without the prior written permission of, and for any purpose not expressly permitted by, McCarthy Engineering Associates, Inc. Any unauthorized use, disclosure, sale or purchase of this document, and all information and work, product represented by and contained herein, is the sole and exclusive property of McCarthy Engineering Associates, Inc. and is not to be used, published, or disclosed to any person, firm or corporation without the prior written permission of, and for any purpose not expressly permitted by, McCarthy Engineering Associates, Inc. Any unauthorized use, disclosure, sale or purchase of this document, and all information and work, product represented by and contained herein, is the sole and exclusive property of McCarthy Engineering Associates, Inc. and is not to be used, published, or disclosed to any person, firm or corporation without the prior written permission of, and for any purpose not expressly permitted by, McCarthy Engineering Associates, Inc.
Copyright 2021 McCarthy Engineering Associates, Inc. All rights reserved.

McCARTHY ENGINEERING ASSOCIATES, INC.
2500 East High Street, Suite 630
Pottstown, PA 19464
www.McCarthy-Engineering.com
Phone: 610.373.8001
595 Van Reed Road, Suite 2
Wyomissing, PA 19610

SEAL:

ELECTRICAL - NEW BUILDING
FIRST FLOOR PLAN
" PUBLIC WORKS FACILITY "

Client: WYOMISSING BOROUGH
Location: WYOMISSING BOROUGH, BERKS COUNTY, PENNSYLVANIA
Date: JULY 19, 2023

DRAWN BY:	PROJ. MANAGER:
SW	NEC
PRINCIPAL:	SCALE:
JCM	AS NOTED

DRAWING NO.
E-3.0

PROJECT NO.
230004

McCARTHY ENGINEERING ASSOCIATES, INC.
www.McCarthy-Engineering.com
2500 East High Street, Suite 630
Pottstown, PA 19464
Phone: 610.378.8001

Project No.
230004

Rev. By	Description	Date	Revision
	ADDENDUM 1	8/9/2023	1

This document, and all information and work, product represented by and contained herein, is the sole and exclusive property of McCarthy Engineering Associates, Inc. and is not to be used, published, or disclosed to any person, firm or corporation not the recipient, and of course permission or authority to extended directly or implied, for any purpose without the express written permission of McCarthy Engineering Associates, Inc.
Copyright 2021 McCarthy Engineering Associates, Inc. All rights reserved.

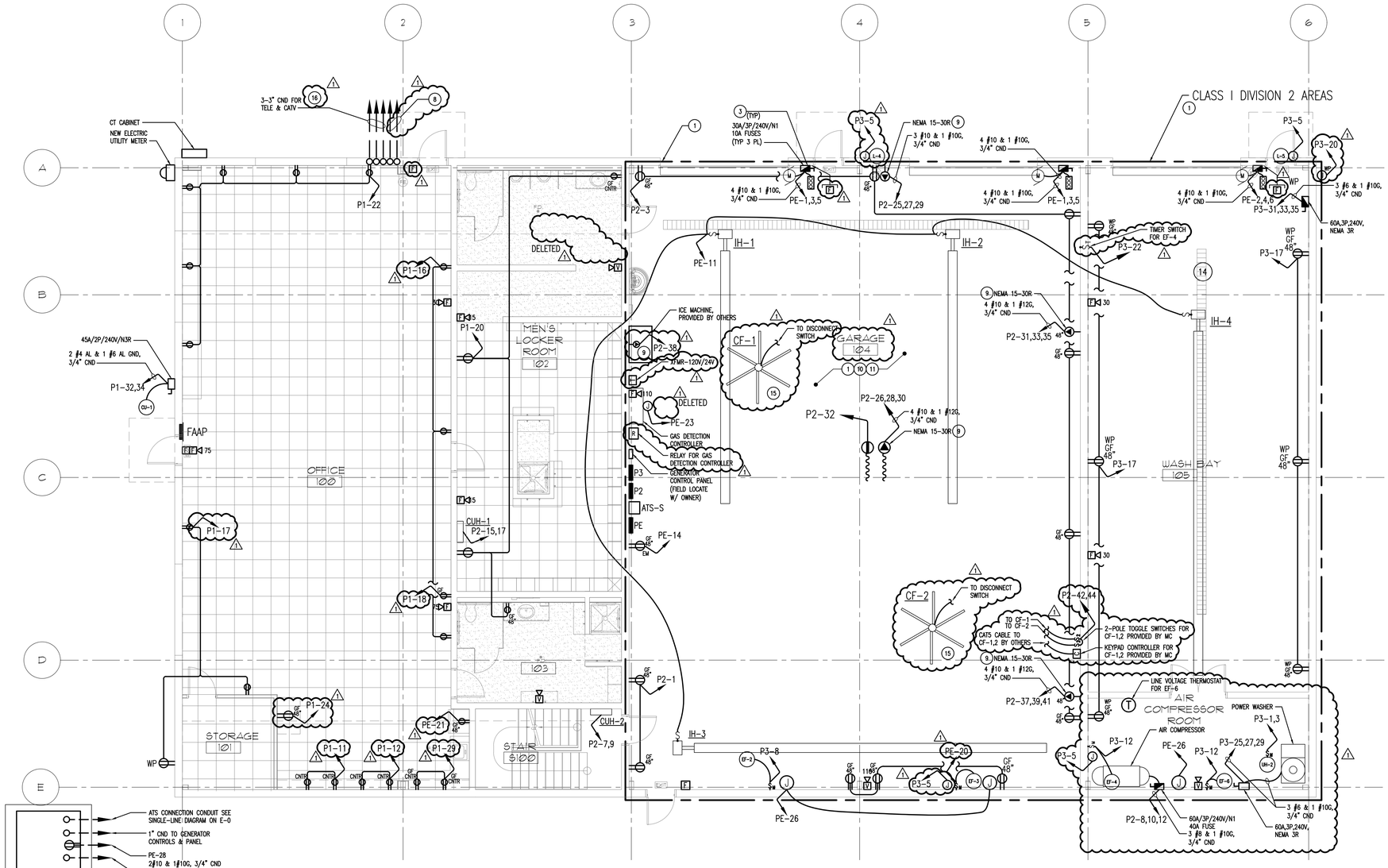

POWER NOTES:

1. REFER TO MECHANICAL DRAWINGS TO WIRING DIAGRAM FOR THE GAS DETECTION CONTROLLER.

POWER KEY NOTES:

1. ALL REPAIR/SERVICE AREAS PER NEC 511 SHALL BE CLASS I DIVISION 2 HAZARDOUS AREAS FROM THE FLOOR TO 18 INCHES ABOVE FLOOR (AND FROM THE CEILING TO 18 INCHES BELOW THE CEILING WHERE LIGHTER-THAN-AIR FUELED VEHICLES ARE REPAIRED/STORED). PITS AND WORK AREAS BELOW THE FLOOR SHALL BE CLASSIFIED AS CLASS 1 DIVISION 1. ALL WIRING AND CIRCUITS IN OR ROUTED THROUGH THESE AREAS SHALL CONFORM TO NEC 501 AND SHALL HAVE MATERIALS AND CONDUIT SEALS PER NEC 501. ALL RECEPTACLES, EQUIPMENT AND DEVICES SHALL BE MOUNTED ABOVE OR BELOW THESE AREAS TO AVOID REQUIREMENT FOR SPECIAL EQUIPMENT. ALL CONDUIT IN THE HAZARDOUS AREAS SHALL BE RGS, IMC OR EMT WITH COMPRESSION FITTINGS. CONDUIT ABOVE/BELOW HAZARDOUS AREAS MAY BE EMT WITH COMPRESSION COUPLINGS. ALL 15A AND 20A RECEPTACLES SHALL BE GFCI TYPE RECEPTACLES. ALL RECEPTACLES SHALL BE MOUNTED AT 48" AFF. CIRCUITS FOR OTHER EQUIPMENT MAY BE RUN THROUGH THIS AREA, BUT THEY SHALL MAINTAIN STRICT COMPLIANCE WITH THE METHODS OF NEC 501.
2. NOT USED.
3. PROVIDE FUSED DISCONNECT FOR EACH OVERHEAD DOOR MOTOR OPERATOR. PROVIDE FUSES SIZED PER RECOMMENDATION OF MANUFACTURER'S INSTALLATION INSTRUCTIONS. COORDINATE ALL EQUIPMENT LOCATIONS IN THE FIELD. WIRE PUSHBUTTONS, SENSORS, CARD READERS, KEYPADS, ETC. PER MANUFACTURER'S INSTALLATION INSTRUCTIONS.
4. NOT USED.
5. PROVIDE A NEMA RECEPTACLE MATCHING THE CORD AND PLUG PROVIDED WITH THE EQUIPMENT.
6. AQUASTAT (PROVIDED BY P.C.) FOR RECIRCULATION PUMP SHALL BE CONNECTED DOWNSTREAM OF THE MANUAL MOTOR STARTER.
7. NOT USED.
8. 2-3" CONDUIT TO EXISTING BUILDING, SEE SHEET E-2.0
9. VERIFY NEMA CONFIGURATION AND CIRCUIT SIZE WITH OWNER AND FIELD VERIFY LOCATION PRIOR TO START OF WORK.
10. NOT USED.
11. NOT USED.
12. E.C. SHALL INSTALL AND WIRE FAN PER MANUFACTURER'S INSTALLATION INSTRUCTIONS. MECHANICAL/CONTROLS CONTRACTOR SHALL CONNECT MODULE SUCH THAT FAN SHUTS DOWN ON ACTIVATION OF FIRE ALARM.
13. PAD DIMENSIONS SHALL BE DETERMINED BY GENERATOR SHOP DRAWINGS AND SHALL EXTEND 4 INCHES (MINIMUM) IN ALL DIRECTIONS AROUND THE GENERATOR.
14. HOOK-UP (CIRCUIT BREAKER AND DISCONNECT) FOR EXISTING POWER WASHER IS SIZED FOR FUTURE POWER WASHER SIMILAR TO THE NEW POWER WASHER BUT PROVIDE FUSES TO MATCH OVERLOAD PROTECTION AT EXISTING POWER WASHER IN EXISTING BUILDING TO ALLOW TEMPORARY RELOCATION OF EXISTING UNIT.
15. REFER TO LIGHTING PLAN FOR CEILING FAN LOCATIONS.
16. CONSULT W/ COMMUNICATION PROVIDER THE TERMINATION LOCATION AT THE UTILITY POLE. REFER TO CIVIL DRAWING FOR DISTANCE.

POWER PLAN
SCALE: 3/16" = 1'-0"

MECHANICAL SCHEDULE											
REF NO	MANUFACTURER	MODEL NUMBER	LOCATION	ELECTRICAL							REMARKS
				HP	WATTS	VOLTS	PHASE	HERTZ	MCA	MOCP	
CF-1,2	GREENHECK	DS-6-870HV	MECHANICS SHOP	2/3	-	208	1	60	7.6	20	
CU-1	TRANE	4TTR6060N1	EXTERIOR	-	-	208-230	1	60	35	60	
CUH-1,2	BERKO	CWH3404F	STAIRS & MEN'S LOCKER	-	3000	208	1	60	14.4	20	2
UH-2	QMARK	MUH0381	AIR COMPRESSOR ROOM	-	3000	208	1	60	14.4	20	
EF-2	PENN-BARRY	Z8S	MAINTENANCE SHOP	-	77	120	1	60	0.64	20	
EF-3	PENN-BARRY	P16RA	MAINTENANCE SHOP	1/2	-	120	1	60	9.8	20	
EF-4	PENN-BARRY	P20SA	WASH BAY	1/3	-	120	1	60	7.2	20	
EF-6	PENN-BARRY	Z10H	COMPRESSOR ROOM	-	390	120	1	60	3.25	20	1

NOTES:
1) UNIT IS PROVIDED WITH HARD WIRED THERMOSTAT. THERMOSTAT WIRING BY E.C.
2) UNIT IS PROVIDED WITH INTEGRAL ON/OFF SWITCH.

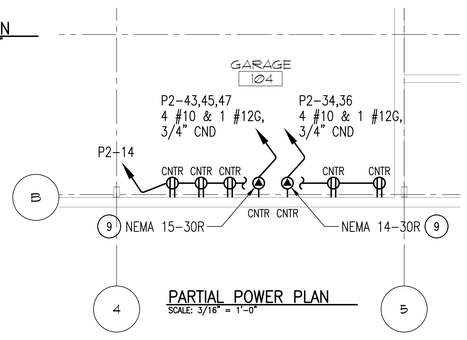

PARTIAL POWER PLAN
SCALE: 3/16" = 1'-0"

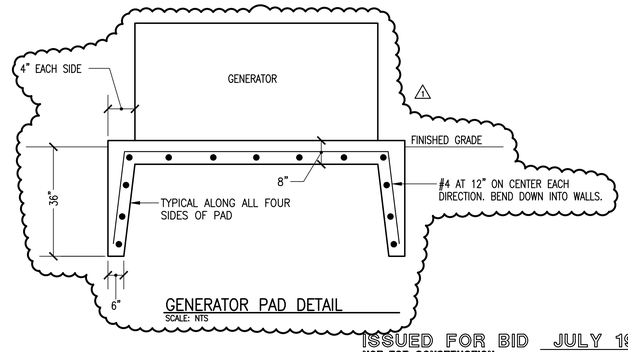

GENERATOR PAD DETAIL
SCALE: NTS

ISSUED FOR BID JULY 19, 2023
NOT FOR CONSTRUCTION

McCARTHY ENGINEERING ASSOCIATES, INC.
2500 East High Street, Suite 630
Pottstown, PA 19464
www.McCarthy-Engineering.com
Phone: 610.378.8001
555 Van Reed Road, Suite 2, Myerstown, PA 19610

SEAL:

ELECTRICAL - NEW BUILDING FIRST FLOOR PLAN
"PUBLIC WORKS FACILITY"

Client: WYOMISSING BOROUGH
Location: WYOMISSING BOROUGH, BERKS COUNTY, PENNSYLVANIA
Date: JULY 19, 2023

DRAWN BY:	PROJ. MANAGER:
SW	NEC
PRINCIPAL:	SCALE:
JCM	AS NOTED

DRAWING NO. E-4.0

PROJECT NO. 230004

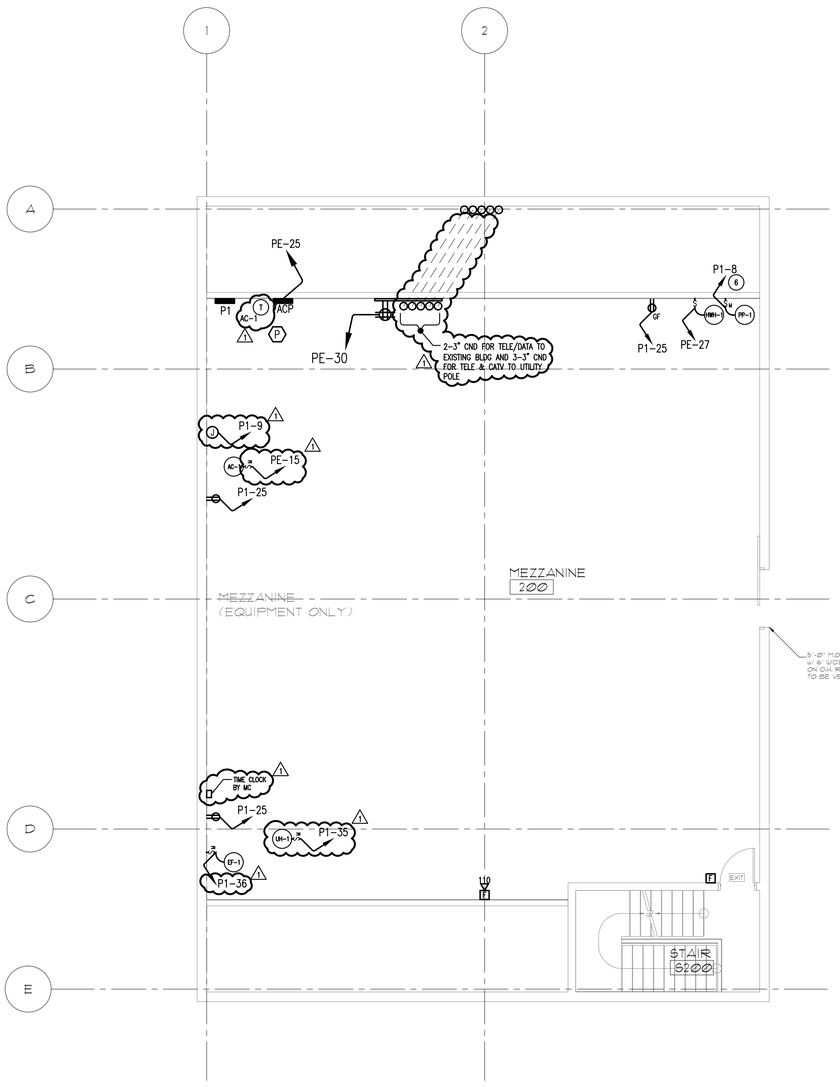

POWER PLAN
SCALE: 3/16" = 1'-0"

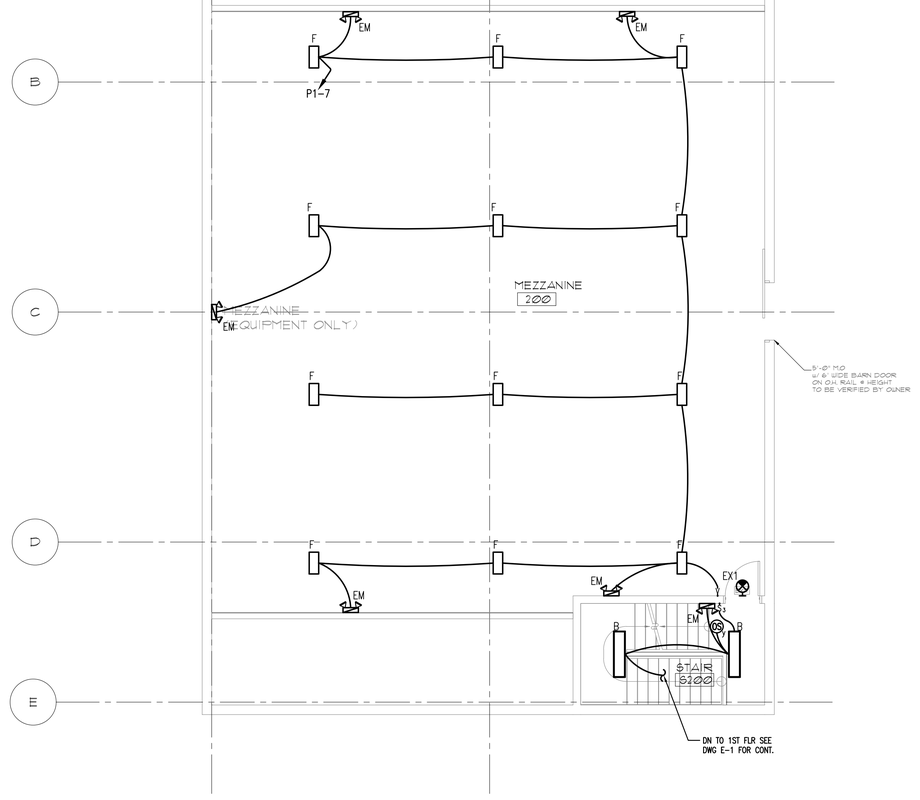

LIGHTING PLAN
SCALE: 3/16" = 1'-0"

POWER NOTES:

1. FOR POWER KEY NOTES (1) SEE DRAWING E-4.0

LIGHTING NOTES:

1. FOR NEW WORK LIGHTING NOTES SEE DRAWING E-3.

⚠1

PLUMBING SCHEDULE

REF NO	MANUFACTURER	CATALOG NUMBER	DESCRIPTION	WATTS	ELECTRICAL			MCA	NOTES
					VOLTS	PHASE	HERTZ		
HWH-1	BRADFORD WHITE	LC2PDV50H765N	48 GALLON HOT WATER HEATER	-	120	1	60	-	1, 2
PP-1	BELL & GOSSETT	NBF-10	HOT WATER RETURN PUMP	52	115	1	60	-	1

NOTES:
1) EQUIPMENT IS PROVIDED BY PLUMBING CONTRACTOR
2) WATER HEATER IS GAS AND HAS A VENT

MECHANICAL SCHEDULE

REF NO	MANUFACTURER	MODEL NUMBER	LOCATION	ELECTRICAL							REMARKS
				HP	WATTS	VOLTS	PHASE	HERTZ	MCA	MOCP	
AC-1	TRANE	S9X2C100U5PSBA	MEZZANINE	1	-	120	1	60	16	20	1
UH-1	RE-VERBER-AIR	UH-45	MEZZANINE	-	-	120	1	60	2.7	15	
EF-1	PENN-BARRY	Z10H	MEZZANINE	-	390	120	1	60	3.25	20	

NOTES:
1) UNIT IS PROVIDED WITH HARD WIRED THERMOSTAT. THERMOSTAT WIRING BY E.C.

ISSUED FOR BID JULY 19, 2023
NOT FOR CONSTRUCTION

McCARTHY ENGINEERING ASSOCIATES, INC.
www.McCarthy-Engineering.com
2500 East High Street, Suite 630
Pottstown, PA 19464
Phone: 610.373.8001

Project No.
230004

Revision	Date	Description	Rev. By
1	8/9/2023	ADDENDUM 1	

This document and all information and work, graphical representations by and contained herein, is the sole and exclusive property of McCarthy Engineering Associates, Inc. and is not to be used in any way, including reproduction, publication, or distribution to any other party, without the express written permission of McCarthy Engineering Associates, Inc. Any unauthorized use, disclosure, sale or licensing of this document, and all formal permission or authority to be extended, directly or implied, for any party without the express written permission of McCarthy Engineering Associates, Inc. All rights reserved.
Copyright, 2011 McCarthy Engineering Associates, Inc.

McCARTHY ENGINEERING ASSOCIATES, INC.
2500 East High Street
Suite 630
Pottstown, PA 19464
www.McCarthy-Engineering.com
Phone: 610.373.8001
595 Van Reed Road
Suite 2
Wyomissing, PA 19610

SEAL:

ELECTRICAL - NEW BUILDING
MEZZANINE FLOOR PLAN
" PUBLIC WORKS FACILITY "

Client: WYOMISSING BOROUGH
Location: WYOMISSING BOROUGH, BERKS COUNTY, PENNSYLVANIA
Date: JULY 19, 2023

DRAWN BY:	PROJ. MANAGER:
SW	NEC
PRINCIPAL:	SCALE:
JCM	AS NOTED

DRAWING NO.
E-4.1

PROJECT NO.
230004

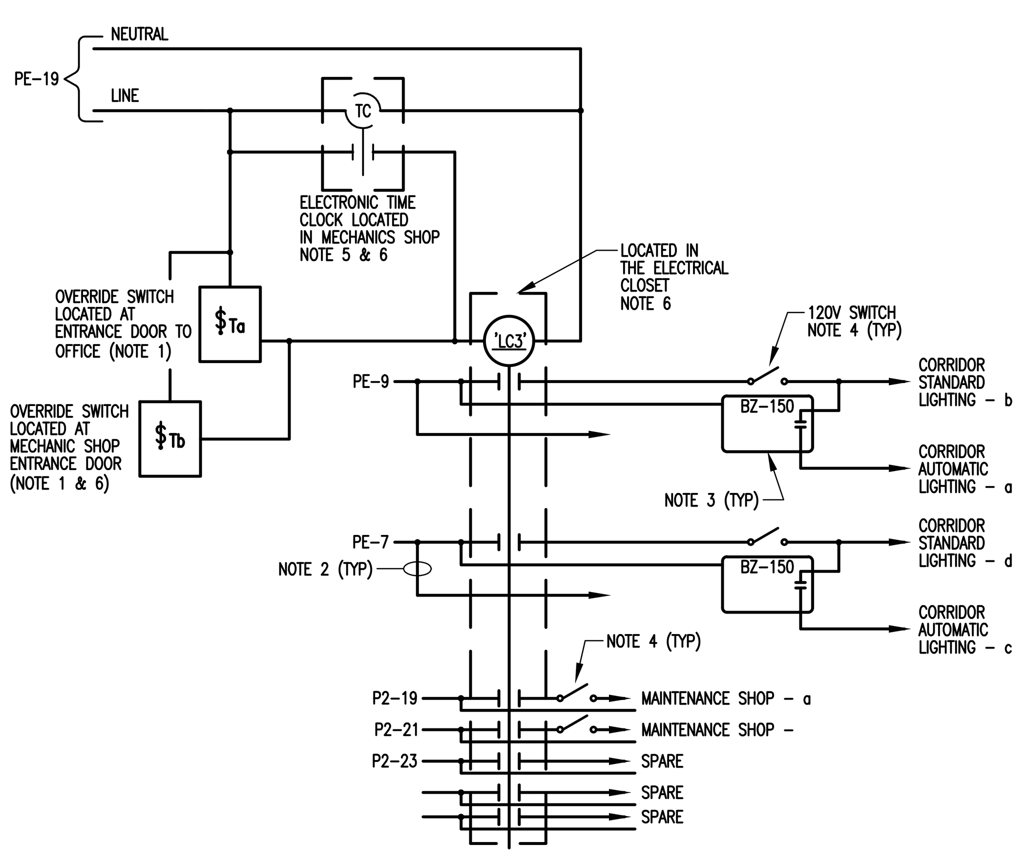

TIME CLOCK LIGHTING CONTROL WIRING DIAGRAM (TYPICAL)

NO SCALE

NOTES:

1. TWO HOUR OVERRIDE AUTOMATIC TIMER SWITCH. LABEL SWITCH "NIGHT TIME OVERRIDE". SWITCH SHALL BE TORK SSA200 OR EQUAL. VERIFY LOCATION IN THE FIELD WITH THE OWNER.
2. UNSWITCHED HOT LEG FOR NIGHTLIGHTS, OCCUPANCY SENSORS, EMERGENCY BALLASTS, EXIT SIGNS AND OTHER AREA LIGHTING.
3. SEE OCCUPANCY SENSOR SYSTEM ELEMENTARY DIAGRAM (TYPICAL) FOR LOW VOLTAGE CONTROL WIRING OF THE BZ UNITS.
4. PROVIDE STANDARD SINGLE OR THREE-WAY TOGGLE SWITCHING CONTROLS AS SHOWN ON THE LIGHTING PLANS.
5. PROVIDE A FOUR INDEPENDENTLY PROGRAMMABLE CONTACT ELECTRONIC TIME SWITCH (INTERMATIC ET8415C).

1 DELETED

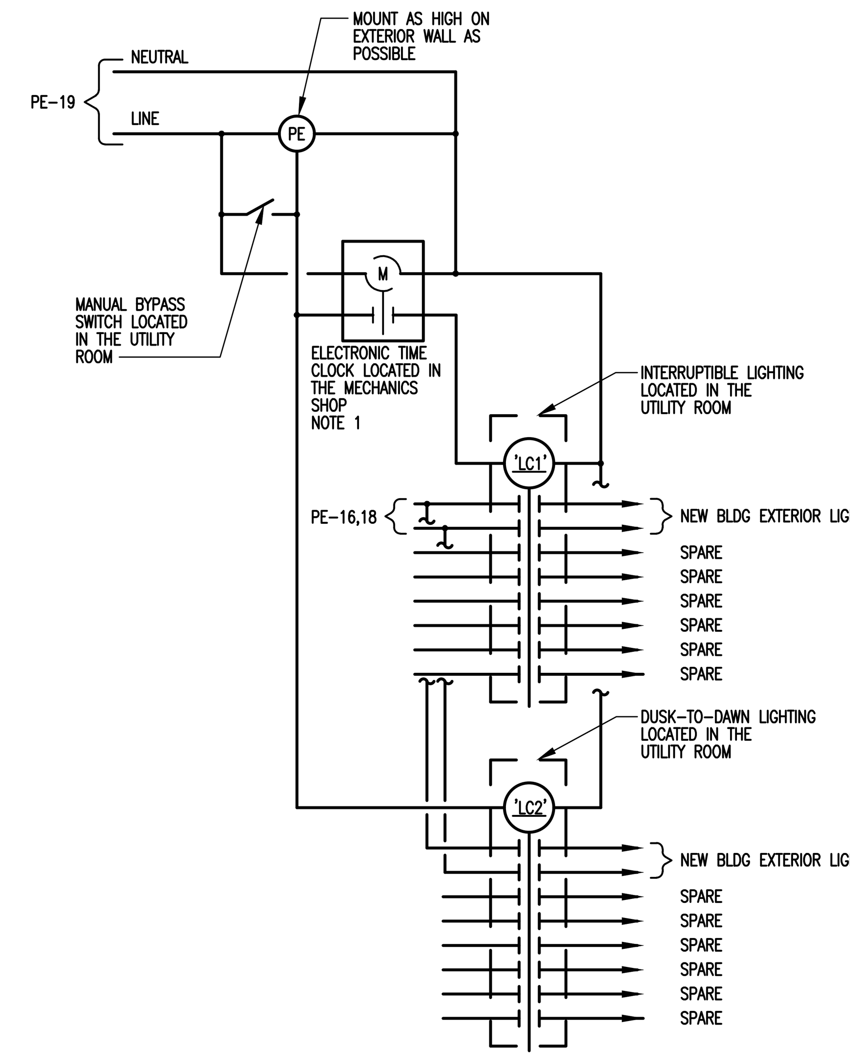

SITE LIGHTING CONTROL WIRING DIAGRAM

NO SCALE

NOTES:

1. PROVIDE A FOUR INDEPENDENTLY PROGRAMMABLE CONTACT ASTRONOMICAL ELECTRONIC TIME SWITCH (INTERMATIC ET8415C).

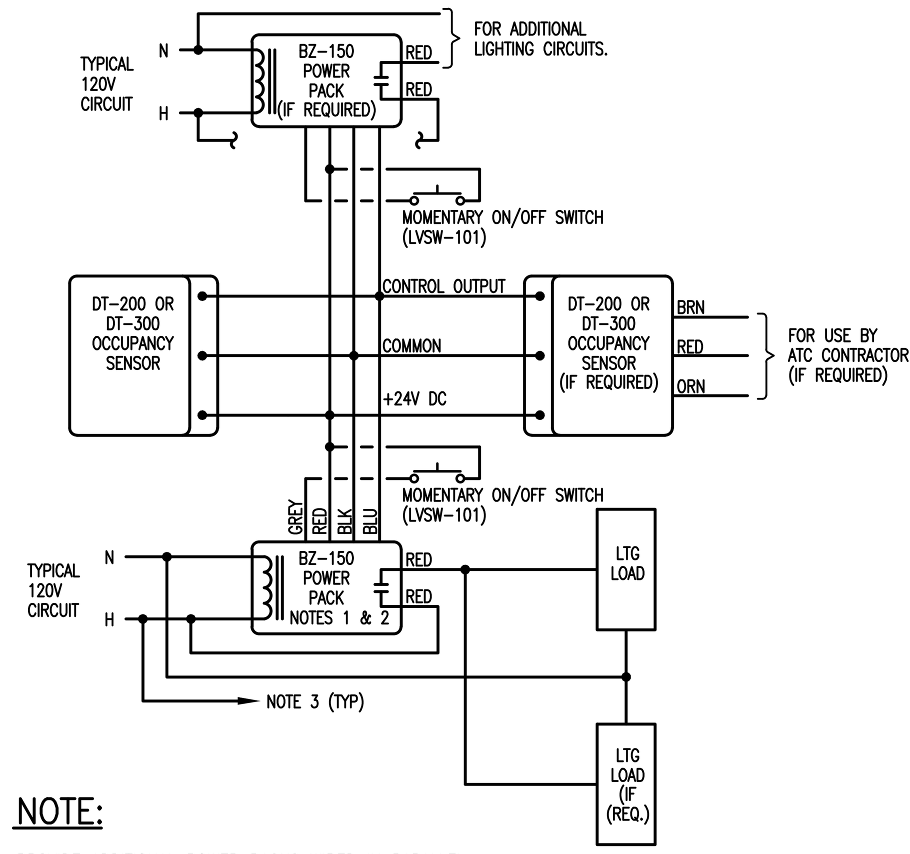

NOTE:

1. PROVIDE ADDITIONAL POWER PACKS WIRED IN PARALLEL FOR EACH GROUP OF THREE OCCUPANCY SENSORS.
2. SET BZ UNIT TO AUTO ON FOR OCCUPANCY SWITCHING.
3. ROUTE UNSWITCHED HOT LEG TO EMERGENCY FIXTURES, NIGHTLIGHTS, EXIT SIGNS AND ADDITIONAL OCCUPANCY SENSORS.

OCCUPANCY OR VACANCY SENSOR SYSTEM ELEMENTARY DIAGRAM (TYPICAL)

NO SCALE

McCARTHY ENGINEERING ASSOCIATES, INC.
www.McCarthy-Engineering.com
2500 East High Street, Suite 630
Pottstown, PA 19464
Phone: 610.373.8001

Project No. 230004

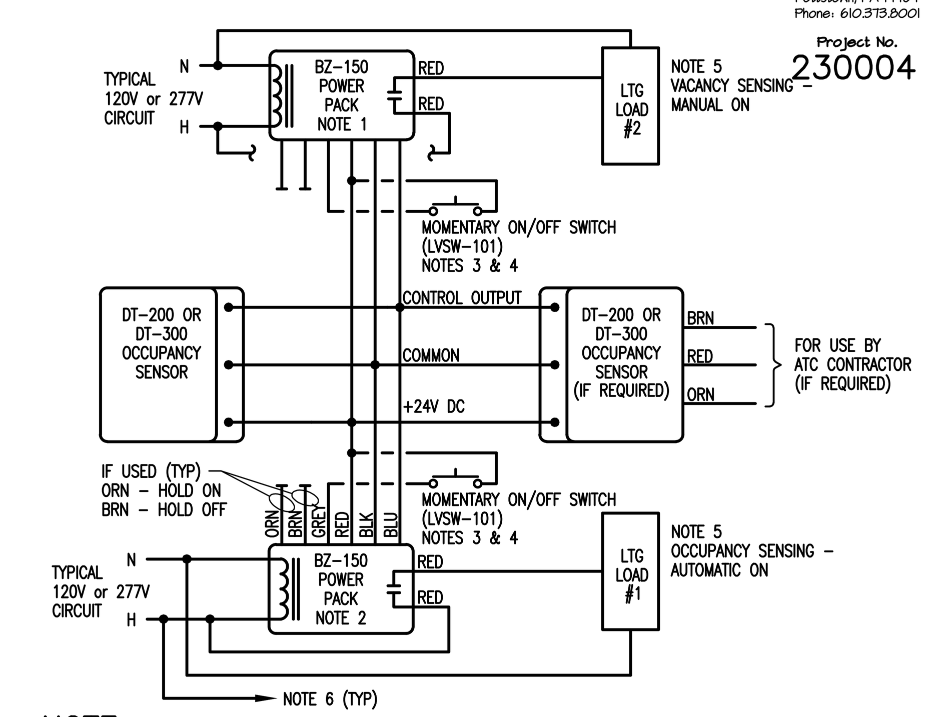

NOTE:

1. SET BZ UNIT TO MANUAL ON FOR VACANCY SENSING. PROVIDE ADDITIONAL POWER PACKS WIRED IN PARALLEL FOR EACH GROUP OF THREE OCCUPANCY SENSORS.
2. SET ONE BZ UNIT TO AUTO ON FOR OCCUPANCY SENSING. PROVIDE ADDITIONAL POWER PACKS WIRED IN PARALLEL FOR EACH GROUP OF THREE OCCUPANCY SENSORS.
3. PROVIDE ADDITIONAL MOMENTARY SWITCHES IN PARALLEL AS NEEDED FOR ADDITIONAL DOORS.
4. TWO MOMENTARY LVSW-101 ON/OFF SWITCHES MAY BE REPLACED BY ONE LVSW-102 DUAL SWITCH.
5. ALTERNATE FIXTURE MOUNTING IN BOTH DIRECTIONS WHERE POSSIBLE TO PROVIDE A CHECKERBOARD EFFECT UNLESS OTHERWISE NOTED.
6. ROUTE UNSWITCHED HOT LEG TO EMERGENCY FIXTURES, NIGHTLIGHTS, EXIT SIGNS AND ADDITIONAL OCCUPANCY SENSORS.

DUAL LEVEL VACANCY/OCCUPANCY SENSOR SYSTEM ELEMENTARY DIAGRAM (TYPICAL)

NO SCALE

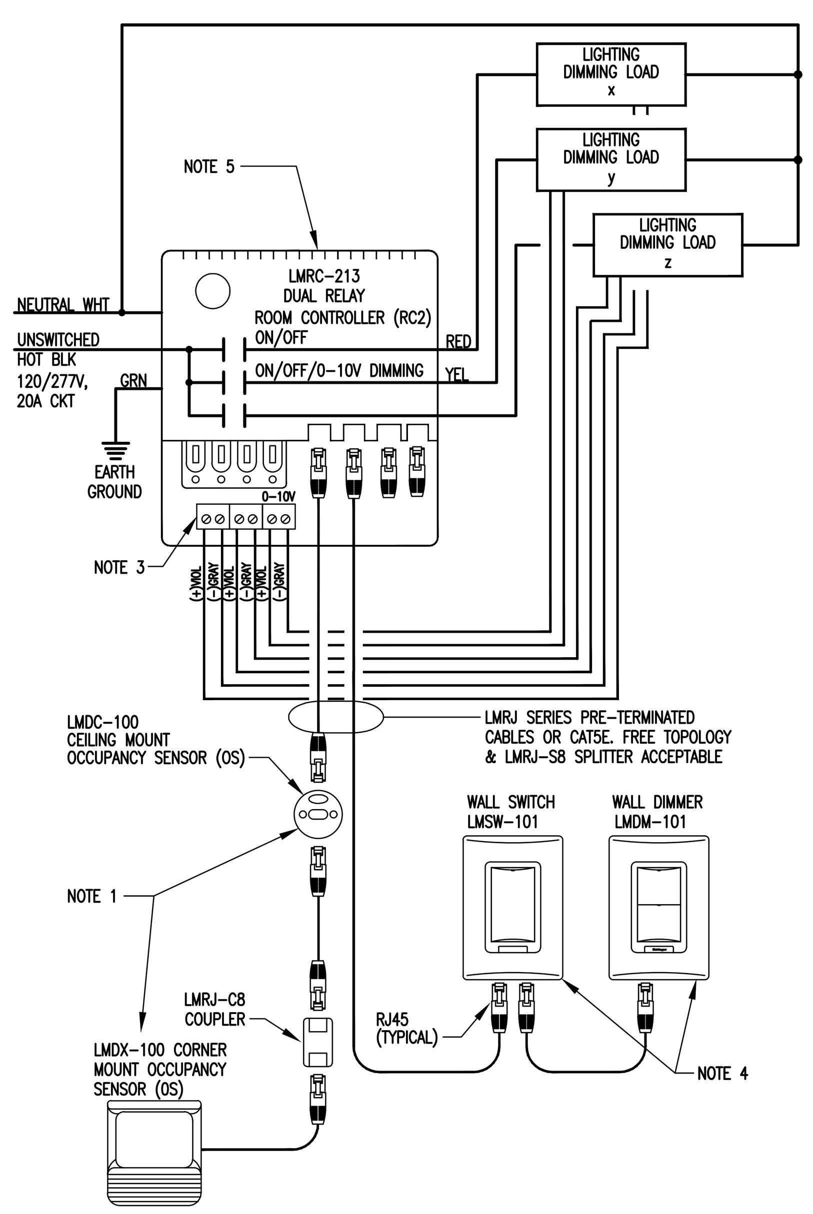

DAYLIGHTING/VACANCY CONTROL DIAGRAM (TYP)

NO SCALE

1. PROVIDE OCCUPANCY SENSORS AS SHOWN ON THE PLANS. CEILING MOUNT LMDC-100 DUAL TECHNOLOGY SENSOR HAS TWO RJ45 PORTS. CORNER MOUNT LMDX-100 HAS PIGTAIL AND SUPPLIED COUPLER. OCCUPANCY SENSORS WITH THE SAME SUBSCRIPT(S) SHALL BE LINKED TOGETHER TO CONTROL THE SAME SWITCHING CIRCUIT(S).
2. USE LMLS-500 PHOTOSENSOR MOUNTED 3 FEET FROM THE WINDOW AND AIMED AT THE WINDOW FOR MULTIPLE DAYLIGHTING ZONES. PHOTOSENSOR SHALL CONTROL THE INDICATED DIMMING ZONES (z1, z2, ETC.) SHOWN ON THE PLAN. THE LIGHTING OUTPUT FOR THE FIXTURES IN A DIMMING ZONE SHALL BE DECREASED LINEARLY AS THE DAYLIGHT INCREASES IN ORDER TO PROVIDE A CONSTANT AND UNIFORM LIGHT LEVEL IN THE AREA.
3. PROVIDE A SEPARATE 0-10V CONNECTION TO DIMMING BALLASTS OF EACH DIMMING ZONE. LIGHTING LOAD SWITCHING CIRCUITS (a, b, ETC.) AND DIMMING ZONES (z1, z2, ETC.) SHALL BE DETERMINED FROM THE LIGHTING FLOOR PLAN. NOTE THAT FIXTURES OF THE SAME DIMMING ZONE MAY BE CONNECTED TO DIFFERENT SWITCHING CIRCUITS.
4. PROVIDE DIMMERS AND/OR SWITCHES FOR THE VARIOUS SWITCHING CIRCUITS (a, b, ETC.) AS SHOWN ON THE LIGHTING FLOOR PLAN. MULTIPLE DIMMERS AND/OR SWITCHES MAY BE SERIES CONNECTED TO PROVIDE CONTROLS AS SHOWN ON THE PLAN.
5. PROVIDE QUANTITY OF LMRC-211, LMRC-212, AND/OR LMRC-213 ROOM CONTROLLERS AS SHOWN ON THE PLAN (NOTE – DIAGRAM ABOVE IS TYPICAL FOR ONE CONTROLLER). EACH CONTROLLER SHALL HAVE ITS OUTPUTS LINKED TO THE CONTROL SWITCHING DIMMING CIRCUIT (a, b, ETC.) AS SHOWN ON THE DIAGRAM ABOVE, AND BY THE LIGHTING FIXTURE SUBSCRIPTS ON THE PLAN. STANDARD SEQUENCE OF OPERATION IS FOR THE FIRST LMRC OUTPUT TO DEFAULT TO AUTOMATIC-ON/AUTOMATIC-OFF AND FOR THE SECOND OUTPUT TO DEFAULT TO MANUAL-ON/AUTOMATIC OFF. USE AN LMCT-100 DIGITAL CONFIGURATION TOOL TO PROGRAM THE OPERATION MODE TO BE AS DESCRIBED BY THE DRAWING NOTES.
6. PROVIDE TWO LMCT-100 DIGITAL CONFIGURATION TOOLS TO THE OWNER.

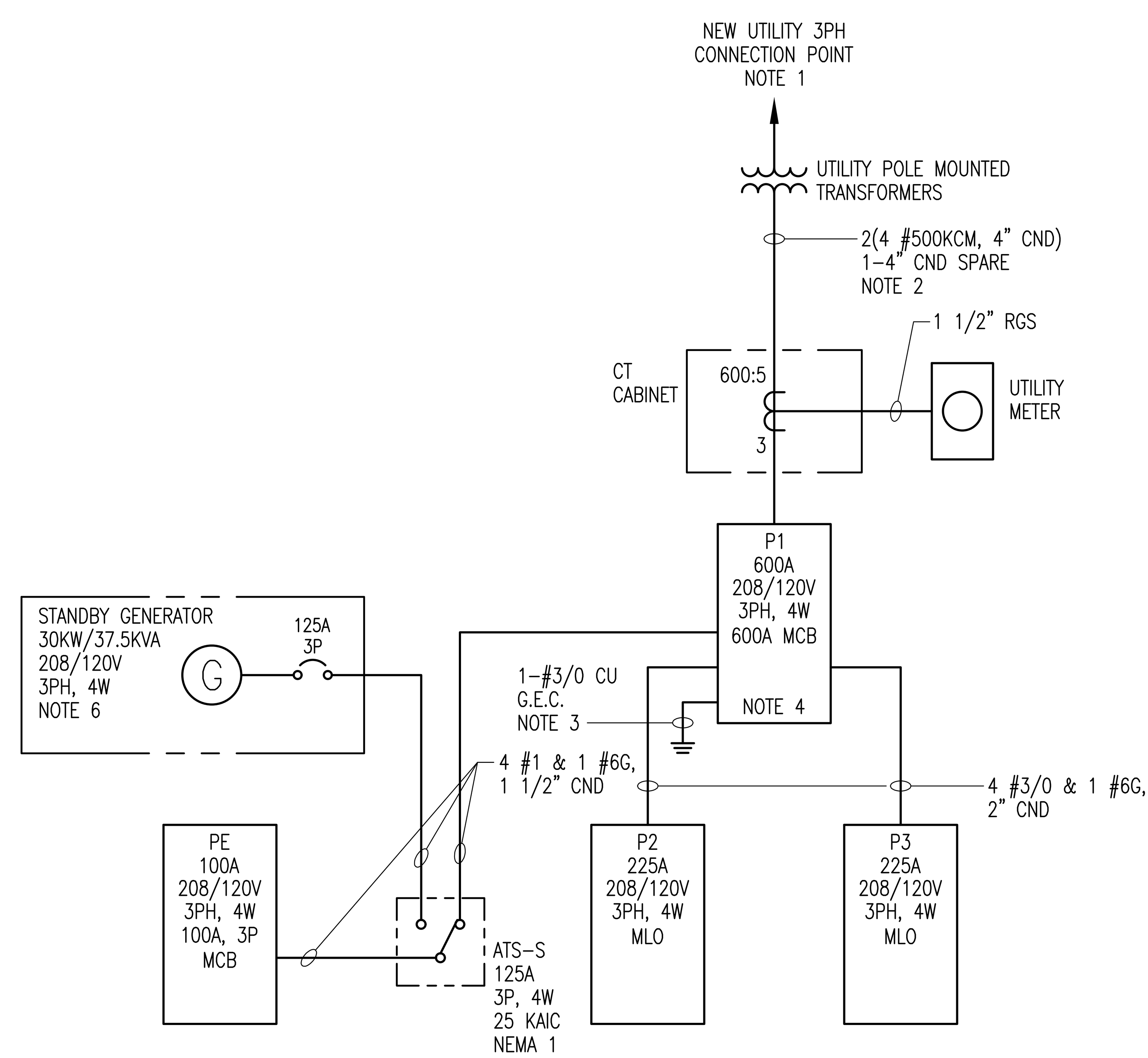

NEW BUILDING SINGLE LINE DIAGRAM

SCALE: NONE

SINGLE LINE/SERVICE NOTES:

1. CONTRACTOR SHALL PROVIDE ALL MATERIAL, LABOR AND WORK REQUIRED FOR A NEW ELECTRICAL SERVICE AS DESCRIBED IN THE LOCAL UTILITY SERVICE AND INSTALLATION REGULATIONS. ANY LOCAL UTILITY COMPANY CHARGES FOR PROVISION OF ELECTRICAL SERVICE SHALL BE INCLUDED IN THE CONTRACTOR'S BASE PRICE. AS A MINIMUM, THE INSTALLATION SHALL MEET THE SERVICE AND INSTALLATION REGULATIONS OF THE LOCAL UTILITY.
2. PROVIDE BURIED PVC SECONDARY CONDUIT AND SECONDARY CONDUCTORS FROM THE UTILITY TRANSFORMER TO THE MAIN PANELBOARD. CONFIRM CONDUIT AND CONDUCTOR QUANTITIES AND SIZES WITH THE LOCAL UTILITY PRIOR TO START OF WORK. INCREASE QUANTITIES AND SIZES AS REQUIRED TO MEET LOCAL UTILITY SERVICE AND INSTALLATION REGULATIONS.
3. PROVIDE A GROUNDING ELECTRODE CONDUCTOR SIZED IN ACCORDANCE WITH THE NATIONAL ELECTRICAL CODE AND CONNECTED TO THE GROUNDING ELECTRODE SYSTEM INCLUDING FOUNDATION REBAR IN ACCORDANCE WITH THE NATIONAL ELECTRICAL CODE.
4. THE SHORT CIRCUIT RATINGS ARE BASED ON AN AVAILABLE SHORT CIRCUIT CURRENT OF 27,800A AT THE UTILITY TRANSFORMER SECONDARY. VERIFY THAT THE UTILITY SHORT CIRCUIT AVAILABLE CURRENT DOES NOT EXCEED THIS VALUE PRIOR TO ORDERING MDP.
5. EXISTING SERVICE TO EXISTING BUILDING SHALL BE RETAINED.
6. CONNECT THE GENERATOR NEUTRAL TO THE NORMAL SYSTEM NEUTRAL AT THE TRANSFER SWITCH. DO NOT GROUND THE NEUTRAL AT THE GENERATOR. THIS GENERATOR IS NOT A SEPARATELY DERIVED SYSTEM.
7. NOT USED 1
8. CONDUCTORS OF THIS CIRCUIT ARE OVERSIZED TO COMPENSATE FOR VOLTAGE DROP. PROVIDE INCREASED SIZE LUGS AS POSSIBLE BUT WHERE THE CONDUCTOR SIZE EXCEEDS THE MAXIMUM CAPACITY OF ANY EQUIPMENT TERMINATION LUGS AVAILABLE, PROVIDE A JUNCTION BOX WITH SPLICE WITHIN TEN FEET OF THE TERMINATION AND REDUCE THE CONDUCTOR SIZE TO THE LARGEST SIZE WHICH CAN BE ACCOMMODATED BY THE EQUIPMENT.

ISSUED FOR BID JULY 19, 2023

NOT FOR CONSTRUCTION

Revision	Date	Description	Rev.By
1	8/9/2023	ADDENDUM 1	

This document and all information and work product represented by and contained herein, is the sole and exclusive property of McCarthy Engineering Associates, Inc.. The information contained herein is licensed only for limited use by the intended recipient, and no license, permission or authority is extended, directly or implied, to any party without the express written permission of McCarthy Engineering Associates, Inc.
Copyright, 2017, McCarthy Engineering Associates, Inc. All rights reserved

McCARTHY ENGINEERING ASSOCIATES, INC.
555 Van Reed Road, Suite 2, Wyomissing, PA 19610
www.McCarthy-Engineering.com
Phone: 610.373.8001
2500 East High Street, Suite 630, Pottstown, PA 19464

SEAL:

ELECTRICAL - NEW BUILDING LIGHTING CONTROL DETAILS

" PUBLIC WORKS FACILITY "

Client: WYOMISSING BOROUGH
Location: WYOMISSING BOROUGH, BERKS COUNTY, PENNSYLVANIA
Date: JULY 19, 2023

DRAWN BY:	PROJ. MANAGER:
SW	NEC
PRINCIPAL:	SCALE:
JCM	AS NOTED

DRAWING NO. E-5.0

PROJECT NO. 230004

LOCATION: NEW BLDG 2ND FLR UTILITY RM

PANEL P1 SCHEDULE

PHASE: 3 | WIRE: 4 | VOLTS: 208/120 | 25 KAIC

CURRENT RATING: 600 AMP - MAIN BREAKER

CKT NO	DESCRIPTION	BREAKER TRIP	BREAKER POLE	KVA LOADS CKT	A	B	C	CKT	BREAKER POLE	BREAKER TRIP	DESCRIPTION	CKT NO
1	PANEL P2	200	3	16.51	27.02			10.51	3	200	PANEL P3	2
3	"	-	-	19.75		30.59		10.84	-	-	"	4
5	"	-	-	17.96			30.38	12.42	-	-	"	6
7	LIGHT - MEZZANINE	20	1	1.20	1.75			0.55	1	20	RECIRC PUMP	8
9	L-6 DAMPER	20	1	0.18		0.18		0.00	1	20	SPARE	10
11	OPEN OFFICE 100 - KITCHENETTE	20	1	0.36			0.72	0.36	1	20	OPEN OFFICE 100 - KITCHENETTE	12
13	SPARE	20	1	0.00	0.00			0.00	1	20	SPARE	14
15	SPARE	20	1	0.00		0.54		0.54	1	20	RECP - OFFICE AREA 100	16
17	RECP - OFFFICE AREA 100	20	1	0.54			1.14	0.60	1	20	EWC	18
19	LIGHT -GARAGE 104	20	1	1.80	3.24			1.44	1	20	RECP - MEN'S LOCKER RM 102	20
21	LIGHT -GARAGE 104	20	1	1.50		2.94		1.44	1	20	RECP - OFFICE AREA 100	22
23	LIGHT - WASH BAY 105	20	1	1.22			2.22	1.00	1	20	VENDING MACHINE	24
25	RECP - MEZZANINE	20	1	0.54	0.54			0.00	1	20	SPARE	26
27	SPARE	20	1	0.00		0.00		0.00	1	20	SPARE	28
29	OPEN OFFICE 100 - KITCHENETTE	20	1	0.36			1.44	1.08	1	20	RECP - CONF. RM. 203	30
31	SPARE	20	1	0.00	7.28			7.28	2	60	CU-1	32
33	SPARE	20	1	0.00		7.28		7.28	-	-	"	34
35	UH-1	20	1	0.32			0.71	0.39	1	20	EF-1	36
37	PANEL PE	125A	3	6.75	6.75			0.00	1	-	SPACE	38
39	"	-	-	7.11		7.11		0.00	1	-	SPACE	40
41	"	-	-	6.07			6.07	0.00	1	-	SPACE	42
		CIRCUIT TOTALS:		82.17				55.73				
		PHASE TOTALS:			46.58	48.64	42.68					
		TOTAL CONNECTED LOAD:					138	KVA				
		TOTAL CONNECTED LOAD:					383	AMP				

*BREAKER LOCKON DEVICE
**SHUNT TRIP BREAKER
***HACR BREAKER
****BREAKER PADLOCK OFF DEVICE

LOCATION: NEW BLDG 1ST FLR EVIDENCE VEHICLE BAY

PANEL P3 SCHEDULE

PHASE: 3 | WIRE: 4 | VOLTS: 208/120 | 10 KAIC

CURRENT RATING: 225 AMP - MAIN LUGS ONLY

CKT NO	DESCRIPTION	BREAKER TRIP	BREAKER POLE	KVA LOADS CKT	A	B	C	CKT	BREAKER POLE	BREAKER TRIP	DESCRIPTION	CKT NO
1	UH-2	20	2	1.50	1.50			0.00	1	20	SPARE	2
3	"	-	-	1.50		1.50		0.00	1	20	SPARE	4
5	DAMPERS @ L-4,L-5,EF-3,EF-4,	20	1	0.40			0.40	0.00	1	20	SPARE	6
7	SPARE	20	1	0.00	0.77			0.77	1	15	EF-2	8
9	SPARE	20	1	0.00		1.18		1.18	1	20	EF-3	10
11	SPACE	-	1	0.00			1.25	1.25	1	20	EF-4 & EF-6	12
13	SPACE	-	1	0.00	0.00			0.00	1	20	SPARE	14
15	SPACE	-	1	0.00		0.00		0.00	1	-	SPACE	16
17	RECEPT - WASH BAY	20	1	1.08			1.08	0.00	1	-	SPACE	18
19	SPACE	-	1	0.00	0.18			0.18	1	15	OIL SEPERATOR ALARM	20
21	SPACE	-	1	0.00		0.18		0.18	1	15	EF-4 TIMER	22
23	SPACE	-	1	0.00			0.00	0.00	1	-	SPACE	24
25	POWER WASHER	60	3	4.90	4.90			0.00	1	-	SPACE	26
27	"	-	-	4.90		4.90		0.00	1	-	SPACE	28
29	"	-	-	4.90			4.90	0.00	1	-	SPACE	30
31	EXG POWER WASHER	60	3	4.90	4.90			0.00	1	-	SPACE	32
33	"	-	-	4.90		4.90		0.00	1	-	SPACE	34
35	"	-	-	4.90			4.90	0.00	1	-	SPACE	36
37	SPACE	-	1	0.00	0.00			0.00	1	-	SPACE	38
39	SPACE	-	1	0.00		0.00		0.00	1	-	SPACE	40
41	SPACE	-	1	0.00			0.00	0.00	1	-	SPACE	42
		CIRCUIT TOTALS:		33.88				3.56				
		PHASE TOTALS:			12.25	12.66	12.53					
		TOTAL CONNECTED LOAD:					37	KVA				
		TOTAL CONNECTED LOAD:					104	AMP				

*BREAKER LOCKON DEVICE
**SHUNT TRIP BREAKER
***HACR BREAKER
****BREAKER PADLOCK OFF DEVICE

LOCATION: MECHANICS SHOP 105

PANEL P2 SCHEDULE

PHASE: 3 | WIRE: 4 | VOLTS: 208/120 | 10 KAIC

CURRENT RATING: 225 AMP - MAIN LUGS ONLY

CKT NO	DESCRIPTION	BREAKER TRIP	BREAKER POLE	KVA LOADS CKT	A	B	C	CKT	BREAKER POLE	BREAKER TRIP	DESCRIPTION	CKT NO
1	RECP - GARAGE 104	20	1	1.26	1.76			0.50	1	20	LIGHT - AIR COMPRESSOR RM	2
3	RECP - GARAGE 104	20	1	1.08		1.08		0.00	1	20	SPARE	4
5	SPARE	20	1	0.00			0.00	0.00	1	20	SPARE	6
7	CUH-2	20	2	1.50	4.70			3.20	3	60	AIR COMPRESSOR	8
9	"	-	-	1.50		4.70		3.20	-	-	"	10
11	SPARE	20	1	0.00			3.20	3.20	-	-	"	12
13	SPARE	20	1	0.00	0.90			0.90	1	20	RECP - GARAGE 104	14
15	CUH-1	20	2	1.50		1.50		0.00	1	20	SPARE	16
17	"	-	-	1.50			1.50	0.00	1	15	SPARE	18
19	SPARE	20	1	0.00	0.00			0.00	1	20	SPARE	20
21	GENERATOR JACK HEATER	20	2	1.00		1.79		0.79	2	20	CEILING FAN - CF-1	22
23	"	-	-	1.00			1.79	0.79	-	-	"	24
25	PORTABLE LIFT	30	3	2.90	4.94			2.04	3	30	LIFT	26
27	"	-	-	2.90		4.94		2.04	-	-	"	28
29	"	-	-	2.90			4.94	2.04	-	-	"	30
31	SPECIAL RECP - GARAGE 104	30	3	2.88	3.06			0.18	1	20	RECP - LIFT	32
33	"	-	-	2.88		5.38		2.50	2	30	SPECIAL RECP - MECHANICS SHOP 105	34
35	"	-	-	2.88			5.38	2.50	-	-	"	36
37	SPECIAL RECP - GARAGE 104	30	3	0.18	0.68			0.50	1	20	ICE MACHINE (1)	38
39	"	-	-	0.18		0.18		0.00	1	20	SPARE	40
41	"	-	-	0.18			0.97	0.79	2	20	CEILING FAN - CF-2	42
43	SPECIAL RECP - GARAGE 104	30	3	0.18	0.97			0.79	-	-	"	44
45	"	-	-	0.18		0.18		0.00	1	20	SPARE	46
47	"	-	-	0.18			0.18	0.00	1	-	SPACE	48
49	SPACE	-	1	0.00	0.00			0.00	1	-	SPACE	50
51	SPACE	-	1	0.00		0.00		0.00	1	-	SPACE	52
53	SPACE	-	1	0.00			0.00	0.00	1	-	SPACE	54
		CIRCUIT TOTALS:		28.76				25.96				
		PHASE TOTALS:			17.01	19.75	17.96					
		TOTAL CONNECTED LOAD:					55	KVA				
		TOTAL CONNECTED LOAD:					152	AMP				

*BREAKER LOCKON DEVICE
**SHUNT TRIP BREAKER
***HACR BREAKER
****BREAKER PADLOCK OFF DEVICE

NOTE:
1) SEE POWER KEYNOTE #9 ON E-4.0

LOCATION: MECHANICS SHOP 105

PANEL PE SCHEDULE

PHASE: 3 | WIRE: 4 | VOLTS: 208/120 | 10 KAIC

CURRENT RATING: 100 AMP MAIN BREAKER

CKT NO	DESCRIPTION	BREAKER TRIP	BREAKER POLE	KVA LOADS CKT	A	B	C	CKT	BREAKER POLE	BREAKER TRIP	DESCRIPTION	CKT NO
1	GARAGE DOOR OPENERS	30	3	1.26	2.52			1.26	3	30	GARAGE DOOR OPENERS	2
3	"	-	-	1.26		2.52		1.26	-	-	"	4
5	"	-	-	1.26			2.52	1.26	-	-	"	6
7	LIGHT - OPEN OFFICE 100	20	1	0.99	1.49			0.50	1	20	LIGHT - GARAGE 104	8
9	LIGHT - LOCKERS & STAIRS	20	1	0.50		0.50		0.00	1	20	SPARE	10
11	IH-1,2,3,4	20	1	2.32			2.32	0.00	1	20	SPARE	12
13	SPARE	20	1	0.00	0.36			0.36	1	20	RECP - GARAGE 104	14
15	AC-1	20	1	1.92		2.25		0.33	2	20	LIGHT - EXTERIOR	16
17	SPARE	20	1	0.00			0.33	0.33	-	-	"	18
19	LIGHT CONTROLS	20*	1	0.60	1.78			1.18	1	20	EF-3	20
21	REFRIGERATOR	20	1	1.00		1.00		0.00	1	-	SPACE	22
23	GAS DETECTION CONTROLLER	20*	1	0.54			0.54	0.00	1	-	SPACE	24
25	FACP	20*	1	0.60	0.60			0.00	1	20	SPARE JUNCTION BOXES	26
27	HOT WATER HEATER VENT	20	1	0.34		1.34		1.00	1	20	GENERATOR BATT CHGR & RECP	28
29	SPARE	20	1	0.00			0.36	0.36	1	20	RECP - TELE/DATA MEZZANINE	30
31	SPARE	20	1	0.00	0.00			0.00	1	-	SPACE	32
33	SPARE	20	1	0.00		0.00		0.00	1	-	SPACE	34
35	SPARE	20	1	0.00			0.00	0.00	1	-	SPACE	36
		CIRCUIT TOTALS:		12.59				7.84				
		PHASE TOTALS:			6.75	7.61	6.07					
		TOTAL CONNECTED LOAD:					20	KVA				
		TOTAL CONNECTED LOAD:					57	AMP				

*BREAKER LOCKON DEVICE
**SHUNT TRIP BREAKER
***HACR BREAKER
****BREAKER PADLOCK OFF DEVICE

McCARTHY ENGINEERING ASSOCIATES, INC.
www.McCarthy-Engineering.com
2500 East High Street, Suite 630
Pottstown, PA 19464
Phone: 610.373.8001

Project No. 230004

Revision	Date	Description	Rev.By
1	8/9/2023	ADDENDUM 1	

This document and all information and work product represented by and contained herein, is the sole and exclusive property of McCarthy Engineering Associates, Inc.. The information contained herein is licensed only for limited use by the intended recipient, and no license, permission or authority is extended, directly or implied, to any party without the express written permission of McCarthy Engineering Associates, Inc.
Copyright, 2017, McCarthy Engineering Associates, Inc. All rights reserved

555 Van Reed Road
Suite 2
Wyomissing, PA 19610
McCARTHY ENGINEERING ASSOCIATES, INC.
www.McCarthy-Engineering.com
Phone: 610.373.8001
2500 East High Street
Suite 630
Pottstown, PA 19464

SEAL:

ELECTRICAL - NEW BUILDING
PANEL SCHEDULES
" PUBLIC WORKS FACILITY "

Client: WYOMISSING BOROUGH
Location: WYOMISSING BOROUGH, BERKS COUNTY, PENNSYLVANIA
Date: JULY 19, 2023

DRAWN BY: SW	PROJ. MANAGER: NEC
PRINCIPAL: JCM	SCALE: AS NOTED

DRAWING NO. E-6.0

PROJECT NO. 230004

ISSUED FOR BID JULY 19, 2023
NOT FOR CONSTRUCTION

SPECIFICATIONS

1.1 THE ARCHITECTURAL GENERAL CONDITIONS SHALL APPLY TO AND FORM A PART OF THE ELECTRICAL SECTION OF THESE SPECIFICATIONS.

1.2 PROVIDE ALL MATERIALS, LABOR, EQUIPMENT, AND TOOLS NECESSARY FOR A COMPLETE AND WORKABLE ELECTRICAL SYSTEM AS INDICATED ON THE DRAWINGS. ALL WORK SHALL BE IN ACCORDANCE WITH THE LATEST EDITION OF THE NATIONAL ELECTRICAL CODE (NEC), LOCAL AND STATE CODES HAVING JURISDICTION, AND APPLICABLE MANUFACTURER'S RECOMMENDATIONS.

1.3 UNLESS NOTED OTHERWISE, THIS CONTRACTOR SHALL FURNISH AND INSTALL ALL CONTROL DEVICES TOGETHER WITH CONTROL WIRING, CONDUIT, AND ALL APPURTENANCES AND ACCESSORIES NECESSARY TO PERFORM THE OPERATING FUNCTIONS AS SPECIFIED. CONTROL DEVICES SHALL INCLUDE, BUT NOT BE LIMITED TO, MOTOR STARTERS, THERMOSTATS, SWITCHING RELAYS, CONTROL RELAYS, AND TRANSFORMERS. WIRING MATERIALS AND INSTALLATION SHALL CONFORM WITH THE NATIONAL ELECTRIC CODE. CONTROL WIRING SHALL INCLUDE, BUT IS NOT LIMITED TO, 120 VOLT CONTROL WIRING AS WELL AS LOW VOLTAGE DIMMING WIRING, OCCUPANCY SENSOR WIRING, AND OTHER LOW VOLTAGE WIRING. ALL CONTROL SYSTEM WIRING EXCEPT LOW VOLTAGE WIRING, SHALL BE 14 AWG MINIMUM INSTALLED IN 1/2-INCH DIAMETER MINIMUM CONDUIT. FLEXIBLE METAL CONDUIT SHALL BE PERMITTED TO MAKE RUNS OF THREE FEET OR LESS FOR FINAL EQUIPMENT CONNECTIONS. LOW VOLTAGE, CONTROL WIRING SHALL BE OPEN, PLENUM RATED, CABLE, ROUTED IN ACCESSIBLE, CONCEALED SPACES ON J HOOKS WITH CLOSURE TIES ON FIVE FOOT CENTERS WHEREVER POSSIBLE. IN INACCESSIBLE SPACES, INCLUDING IN WALLS, LOW VOLTAGE CONTROL WIRING SHALL BE ROUTED IN 3/4-INCH CONDUIT. OPEN CONTROL WIRING SHALL NOT REST ON OR IMPEDE THE REMOVAL OF CEILING TILES.

1.4 THE CONTRACTOR SHALL VISIT THE SITE, EXAMINE ALL CONDITIONS, AND MAKE ALLOWANCES FOR DIFFICULTIES AND CONTINGENCIES AFFECTING THE PROPER EXECUTION OF THIS CONTRACT.

1.5 THE CONTRACTOR SHALL OBTAIN AND PAY ALL FEES NECESSARY FOR PERMITS AND INSPECTIONS REQUIRED WITH HIS WORK. ALL ELECTRICAL WORK SHALL BE INSPECTED AND CERTIFIED BY AN INDEPENDENT INSPECTION AGENCY SUCH AS THE MIDDLE DEPARTMENT INSPECTION AGENCY (MDIA).

1.6 ALL MATERIALS SHALL BE MANUFACTURED WITHIN THE SCOPE OF THE UNDERWRITER'S LABORATORIES, SHALL CONFORM TO UL STANDARDS, CARRY UL APPROVAL, AND SHALL BE USED FOR THE PURPOSE FOR WHICH THEY ARE APPROVED.

1.7 ALL EQUIPMENT, MATERIALS, AND WORKMANSHIP SHALL BE GUARANTEED FOR A MINIMUM OF ONE YEAR FROM THE DATE OF ACCEPTANCE BY THE OWNER.

1.8 WHERE PRODUCTS ARE SPECIFIED BY BRAND NAME, CATALOG NUMBERS, OR BY NAMES OF MANUFACTURERS, THE REFERENCE IS INTENDED TO BE DESCRIPTIVE AND NOT RESTRICTIVE AND IS SOLELY FOR THE PURPOSE OF INDICATING THE TYPE OF QUALITY OF ITEM THAT WILL BE ACCEPTABLE. AN APPROVED EQUAL WILL BE CONSIDERED UNLESS INDICATED OTHERWISE.

1.9 SHOP DRAWINGS SHALL BE SUBMITTED AND REVIEWED PRIOR TO ORDERING ANY EQUIPMENT.

1.10 THE CONTRACTOR SHALL COORDINATE AND COOPERATE WITH ALL OTHER TRADES.

1.11 ALL CUTTING AND PATCHING OF EVERY NATURE REQUIRED IN CONNECTION WITH THIS CONTRACT SHALL BE DONE BY THE CONTRACTOR WITH MECHANICS EXPERIENCED IN THEIR RESPECTIVE TRADES. ALL PATCHING SHALL MATCH ADJACENT FINISHES.

1.12 CONTRACTOR SHALL ENGAGE THE SERVICES OF A FIRE PROTECTION CONTRACTOR TO REVIEW THE DRAWINGS AND INSTALL FIRE PROTECTION PRODUCTS TO MAINTAIN THE INTEGRITY OF ALL PIPE, WIRE, CONDUIT, AND SIMILAR. PENETRATIONS THROUGH ANY AND ALL FIRE RATED WALLS, FLOORS, BARRIERS, AND ASSEMBLIES. FIRE STOP TRAINING AND PRODUCTS SHALL BE 3M OR APPROVED EQUAL.

1.13 ALL EXCAVATIONS SHALL HAVE SOLID, UNDISTURBED BOTTOMS, SUBJECT TO APPROVAL BY THE OWNER'S REPRESENTATIVE PRIOR TO CONDUIT PLACEMENT. SHOULD BOTTOMS BECOME SOFT OR WET BEFORE CONDUIT IS PLACED, ALL SUCH UNSUITABLE BOTTOMS MUST BE REMOVED AT NO COST TO THE OWNER AND FILLED WITH CONCRETE. NO SLOPING BEARING WILL BE PERMITTED.

1.14 CONDUIT SHALL BE CONCEALED WHERE POSSIBLE UNLESS APPROVED OTHERWISE BY THE OWNER.

1.15 CONDUIT SHALL BE 3/4-INCH MINIMUM, UNLESS NOTED OTHERWISE, AND SHALL BE IN ACCORDANCE WITH THE FOLLOWING TYPES OF USAGE:

A. EMT – USE FOR INTERIOR EXPOSED AND CONCEALED WORK NOT SUBJECT TO DAMPNESS OR SEVERE PHYSICAL DAMAGE. DO NOT USE FOR EXTERIOR WORK. DO NOT USE WHEN IN CONTACT WITH CINDER FILL UNLESS PROTECTED BY AT LEAST TWO INCHES OF CONCRETE OR UNLESS TUBING IS AT LEAST 18 INCHES UNDER THE FILL. DO NOT USE EMT IN HAZARDOUS LOCATIONS. USE WITH SET SCREW FITTINGS.

B. RIGID METAL CONDUIT – USE FOR INTERIOR WORK SUBJECT TO CORROSIVE INFLUENCES, DAMPNESS AND/OR SEVERE PHYSICAL DAMAGE. USE FOR EXTERIOR WORK. RIGID GALVANIZED STEEL CONDUIT MAY PASS THROUGH CONCRETE WALLS AND SLABS BUT SHALL ONLY BE EMBEDDED IN WALLS AND/OR SLABS WHEN APPROVED BY A LICENSED PROFESSIONAL STRUCTURAL ENGINEER.

C. PVC – USE SCHEDULE 40 FOR BELOW GRADE CONCEALED AREAS AND FOR ENCASED IN CONCRETE UNDERGROUND DUCT BANK INSTALLATIONS. DO NOT USE FOR SUPPORT OF FIXTURES OR EQUIPMENT, WHERE SUBJECT TO PHYSICAL DAMAGE, WHERE SUBJECT TO HIGH AMBIENT TEMPERATURES, IN RETURN AIR PLENUMS, OR WITH CONDUCTORS WHOSE INSULATION TEMPERATURE LIMITATIONS EXCEED THOSE FOR WHICH THE CONDUIT IS APPROVED. DO NOT USE PVC CONDUIT IN HAZARDOUS LOCATIONS.

D. ALL CONCEALED BRANCH CIRCUIT WIRING ABOVE GRADE IN NON-HAZARDOUS LOCATIONS MAY BE METAL CLAD CABLE, TYPE MC, MINIMUM SIZE #12 AWG, MAXIMUM SIZE #8 AWG, UNLESS NOTED OTHERWISE. UNIVERSAL TYPE FASTENING DEVICES SHALL BE USED TO PROPERLY SECURE THE MC CABLES PARALLEL TO THE WOOD OR METAL FRAMING MEMBER. DEVICE SHALL BE INSTALLED IN CENTER OF MEMBER ON INTERVALS NO GREATER THAN FOUR FEET SIX INCHES.

1.16 INSTALL FLEXIBLE METALLIC CONDUIT AT ALL MOTOR CONNECTIONS INSIDE THE BUILDING AND LIQUID-TIGHT FLEXIBLE METAL CONDUIT AT MOTOR CONNECTIONS OUTSIDE THE BUILDING. CONDUIT SHALL NOT EXCEED 18 INCHES IN LENGTH.

1.17 UNLESS OTHERWISE NOTED, ALL WIRE SHALL BE OF SOFT DRAWN COPPER, SOLID OR STRANDED OF 98 PERCENT CONDUCTIVITY WITH INSULATION RATED 600 VOLTS. ALL SIZES SHOWN ON THE DRAWINGS ARE BASED ON COPPER. ALUMINUM CONDUCTORS FOR #2 AWG AND LARGER MAY BE USED WHERE PERMITTED BY OWNER, WHEN RESIZED IN STRICT ACCORDANCE WITH NEC REQUIREMENTS. CONDUCTORS SHALL BE AS FOLLOWS:

A. #8 AND LARGER SHALL BE STRANDED WITH TYPE THHN/THWN INSULATION.

B. #10 AND SMALLER SHALL BE SOLID WITH TYPE THHN/THWN INSULATION.

C. #12 SHALL BE MINIMUM SIZE CONDUCTOR EXCEPT #14 MAY BE USED FOR CONTROL CIRCUIT WIRING AND #10 SHALL BE THE MINIMUM SIZE FOR CIRCUITS OVER 100 FEET LONG.

1.18 WIRE CONNECTIONS FOR SPLICING #8 AWG AND SMALLER SHALL BE MADE WITH PRESSURE CONNECTORS CONSISTING OF CONE-SHAPED COIL SPRINGS WITH INSULATED COVERS. SPLICING OF CONDUCTORS LARGER THAN #8 SHALL BE MADE USING MECHANICAL SPLICING OR COMPRESSION TYPE DEVICES.

1.19 ALL LUGS AND/OR CIRCUIT BREAKER LUG CONNECTORS SHALL BE COPPER OR HIGH PERCENTAGE COPPER ALLOY RATED FOR USE WITH 75 DEGREE C WIRING.

1.20 PIN ADAPTER TERMINALS SHALL BE INSTALLED ON ALL ALUMINUM CONDUCTOR TERMINATIONS. TERMINALS SHALL CONSIST OF A TIN-PLATED STRANDED COPPER WIRE PIGTAIL AND A TIN-PLATED ALUMINUM BARREL PRE-FILLED WITH OXIDE INHIBITOR AND CAPPED. PIN ADAPTER TERMINALS SHALL BE PROVIDED WITH COMPATIBLE INSULATING COVERS AND HAVE A 90 DEGREES C RATING PER UL 486B.

1.21 LED DIMMER SWITCHES SHALL BE MATCHED TO THE DIMMING DRIVER AND SHALL BE SIMILAR TO FLUORESCENT DIMMER SWITCHES ABOVE.

1.22 OUTLET BOXES OF PROPER TYPE AND NOT LESS THAN FOUR INCHES SQUARE SHALL BE USED AT ALL LIGHTING, RECEPTACLE AND SWITCH LOCATIONS. PLASTER RINGS SHALL BE USED AT EACH BOX LOCATION WHERE NECESSARY. SURFACE MOUNTED WIRING DEVICES SHALL BE INSTALLED IN "HANDY BOX" TYPE OUTLET BOXES WITH CORRESPONDING COVER PLATES. OUTLET BOXES SHALL BE AS MANUFACTURED BY AMERICAN ELECTRIC, RACO, CARLON, OR APPROVED EQUAL.

1.23 JUNCTION BOXES OF AMPLE SIZE SHALL BE PROVIDED AS REQUIRED BY CONSTRUCTION IN ACCORDANCE WITH THE NEC. BOXES SHALL BE CONSTRUCTED OF CAST RUST-RESISTING METAL OR OF 14 GAUGE GALVANIZED STEEL WITH RIVETED OR WELDED JOINTS AND PROVIDED WITH COVERS OF THE SAME MATERIAL WHICH SHALL BE SCREWED OR HINGED TO THE BOX. BOXES SHALL BE FLANGED AND TAPPED TO RECEIVE MACHINE SCREWS. HOLES IN COVERS SHALL BE IN ALIGNMENT WITH TAPPED HOLES IN BOX. WHERE NO SIZES ARE GIVEN ON THE DRAWINGS, BOXES SHALL BE NO SMALLER THAN THE MINIMUM SIZE ALLOWED BY NEC. WHERE FEEDERS OF DIFFERENT SYSTEMS OR VOLTAGES PASS THROUGH THE SAME BOX, BARRIERS SHALL BE PROVIDED FOR PROPER SEPARATION.

1.24 FLOOR BOXES SHALL CONSIST OF A CONCEALED MOUNTING BOX AND A FLUSH TRIM PLATE AND COVER. THE CONCEALED MOUNTING BOX SHALL BE AN ADJUSTABLE SHALLOW STAMPED STEEL BOX, WHICH ACCEPTS TWO DEVICE PLATES. BOX SHALL BE STEEL CITY, CATALOG NO. 642 OR APPROVED EQUAL. COVERPLATES SHALL BE ALUMINUM WHICH FIT INTO THE TRIM PLATES WITH THE TOP FLUSH WITH THE CONCRETE OR TILE FLOOR. TRIM PLATE AND COVER MATERIAL SHALL BE VERIFIED WITH THE OWNER'S REPRESENTATIVE. COVERPLATE SHALL BE STEEL CITY, CATALOG NO. P-64-DS OR APPROVED EQUAL. COORDINATE FLOOR BOX DEPTH WITH SLAB AND FLOOR COVERING THICKNESS PRIOR TO ORDERING.

1.25 SWITCHES SHALL BE SPECIFICATION GRADE, 120/277 VOLTS AC, TOGGLE TYPE RATED 20 AMPERES. DIMMER SWITCHES SHALL BE MATCHED TO THE DIMMING BALLAST OR DRIVER AND SHALL HAVE A CAPACITY GREATER THAN THE COMBINED FIXTURE LOAD TO BE DIMMED. SWITCH TYPE AND NUMBER OF POLES SHALL BE AS INDICATED ON THE DRAWINGS. SWITCHES SHALL BE AS MANUFACTURED BY LEVITON, HUBBELL, GENERAL ELECTRIC, OR APPROVED EQUAL.

1.26 OCCUPANCY/VACANCY SENSING SYSTEM

A. CEILING OR WALL MOUNTED DUAL TECHNOLOGY OCCUPANCY SENSORS SHALL HAVE COMBINED PASSIVE INFRARED TECHNOLOGY AND ULTRASONIC TECHNOLOGY. THE ULTRASONIC OCCUPANCY SENSOR SHALL BE CAPABLE OF DETECTING PRESENCE, IN THE CONTROL AREA, BY DETECTING SONIC SHIFTS IN TRANSMITTED ULTRASOUND. THE PASSIVE INFRARED SENSORS SHALL BE CAPABLE OF DETECTING PRESENCE, IN CONTROL AREA, BY DETECTING CHANGES IN INFRARED ENERGY. THE CEILING SENSOR SHALL BE LOW PROFILE, CEILING MOUNTED WITH A COVERAGE AREA OF 38 FEET DIAMETER, 360 DEGREE CIRCULAR PATTERN. THE WALL SENSOR SHALL BE CORNER WALL MOUNTED WITH A COVERAGE AREA OF 38 FEET IN A 90 DEGREE PATTERN. SENSOR SHALL BE MOUNTED WITHIN 20 FEET OF THE AREA ENTRANCE. ONCE LIGHTING IS ON, DETECTION BY EITHER TECHNOLOGY SHALL HOLD LIGHTING ON. EACH SENSOR SHALL CONTAIN A SHUNT PROVISION, WHICH WILL ENABLE BYPASS OF THE SENSOR IN THE EVENT OF FAILURE. EACH SENSOR SHALL BE FIELD SET SO THAT ONLY ONE TECHNOLOGY IS NEEDED TO TRIGGER LIGHTING ON. SENSOR SHALL BE TEMPERATURE AND HUMIDITY RESISTANT WITH LESS THAN A 6 DB SHIFT IN THE TEMPERATURE RANGE OF -4 DEGREES F TO 140 DEGREES F. TIME DELAY RANGE SHALL BE ADJUSTABLE FROM 5 TO 30 MINUTES AND SET FOR 20 MINUTES UNLESS OTHERWISE NOTED. SENSORS SHALL OPERATE ON 24 VOLTS DC PROVIDED FROM A SYSTEM COMPATIBLE POWER PACK AND DRAW A MAXIMUM OF 43 MILLIAMPS. SENSORS SHALL BE WATT STOPPER MODEL DT-300 OR DT-200.

B. CEILING OR WALL MOUNTED DUAL TECHNOLOGY VACANCY SENSORS SHALL HAVE COMBINED PASSIVE INFRARED TECHNOLOGY AND ULTRASONIC TECHNOLOGY. THE ULTRASONIC SENSOR SHALL BE CAPABLE OF DETECTING PRESENCE IN THE CONTROL AREA, BY DETECTING SONIC SHIFTS IN TRANSMITTED ULTRASOUND. THE PASSIVE INFRARED SENSORS SHALL BE CAPABLE OF DETECTING PRESENCE IN CONTROL AREA BY DETECTING CHANGES IN INFRARED ENERGY. THE CEILING SENSOR SHALL BE LOW PROFILE, CEILING MOUNTED WITH A COVERAGE AREA OF 38 FEET DIAMETER, 360 DEGREE CIRCULAR PATTERN. THE WALL SENSOR SHALL BE CORNER WALL MOUNTED WITH A COVERAGE AREA OF 38 FEET IN A 90 DEGREE PATTERN. A SENSOR SHALL BE MOUNTED WITHIN 20 FEET OF EACH AREA ENTRANCE. ONCE LIGHTING IS ON, DETECTION BY EITHER TECHNOLOGY SHALL HOLD LIGHTING ON. EACH SENSOR SHALL CONTAIN A SHUNT PROVISION, WHICH WILL ENABLE BYPASS OF THAT SENSOR IN THE EVENT OF FAILURE. EACH SENSOR SHALL BE FIELD SET SO THAT MANUAL ACTIVATION BY A WATT STOPPER LVSW-101 LOW VOLTAGE MOMENTARY WALL SWITCH IS NEEDED TO TRIGGER LIGHTING ON. SENSOR SHALL BE TEMPERATURE AND HUMIDITY RESISTANT WITH LESS THAN A 6 DB SHIFT IN THE TEMPERATURE RANGE OF -4 DEGREES F TO 140 DEGREES F. TIME DELAY RANGE SHALL BE ADJUSTABLE FROM 5 TO 30 MINUTES BUT SET TO 20 MINUTES UNLESS OTHERWISE NOTED. SENSORS SHALL OPERATE ON 24 VOLTS DC PROVIDED FROM A SYSTEM COMPATIBLE POWER PACK AND DRAW A MAXIMUM OF 43 MILLIAMPS. SENSORS SHALL BE WATT STOPPER MODEL DT-300 OR DT-200.

C. SENSOR POWER PACKS SHALL BE A SELF-CONTAINED TRANSFORMER DESIGNED WITH A 1/2-INCH SNAP-IN NIPPLE FOR MOUNTING IN 1/2-INCH KNOCK-OUT ON A SURFACE MOUNT TYPE MOUNTING BOX. POWER PACKS SHALL HAVE TWO DRY CONTACTS CAPABLE OF SWITCHING A 20 AMPERE BALLAST LOAD AT 120 VAC AND PROVIDE 24 VDC AT 150MA OUTPUT CAPABLE OF CONTROLLING UP TO THREE DUAL TECHNOLOGY OCCUPANCY SENSORS. POWER PACK SHALL BE WATT STOPPER CATALOG NO. BZ-50, BZ-150 OR BZ-200 AS SHOWN ON THE DRAWINGS OR APPROVED EQUAL. PROVIDE MULTIPLE POWER PACKS OF THE PROPER TYPE WHERE COMBINED OCCUPANCY OR VACANCY AND/OR PLUG CONTROL IS INDICATED ON THE DRAWINGS.

1.27 DUPLEX RECEPTACLES SHALL BE SPECIFICATION GRADE, POLARIZED, GROUNDED, NEMA 5-20R, 20 AMPERE, 125 VOLTS AC. RECEPTACLES SHALL BE AS MANUFACTURED BY LEVITON, HUBBELL, GENERAL ELECTRIC, OR APPROVED EQUAL. RECEPTACLES WITH INTEGRAL GROUND FAULT CIRCUIT INTERRUPTING CAPACITY SHALL BE PROVIDED AS INDICATED ON THE DRAWINGS. WEATHERPROOF DUPLEX RECEPTACLES SHALL BE WEATHER RESISTANT, GROUND FAULT CIRCUIT INTERRUPTING TYPE MOUNTED IN A WEATHERPROOF ENCLOSURE WHICH RETAINS ITS RATING WHILE IN USE.

1.28 WIRING DEVICES AND COVER PLATES ARE TO BE COLOR COORDINATED WITH THE OWNER'S REPRESENTATIVE. ONE-PIECE DEVICE COVER PLATES SHALL BE PROVIDED FOR ALL OUTLETS. PLATES SHALL BE SMOOTH THERMOPLASTIC TYPE AS MANUFACTURED BY LEVITON, HUBBELL, GENERAL ELECTRIC, OR APPROVED EQUAL.

1.29 SAFETY SWITCHES SHALL BE THE SIZE AND TYPE AS SHOWN ON THE DRAWINGS. FUSE SIZE, IF REQUIRED, SHALL BE AS SHOWN ON THE DRAWINGS. SWITCHES SHALL BE HEAVY DUTY WITH QUICK-MAKE, QUICK-BREAK OPERATING MECHANISM. THE HANDLE AND MECHANISM SHALL BE AN INTEGRAL PART OF THE BOX AND NOT THE COVER WITH POSITIVE PAD LOCKING PROVISIONS IN THE "OFF" POSITION. SWITCHES SHALL BE NEMA 1 (INTERIOR) AND NEMA 3R (EXTERIOR) AND SHALL BE AS MANUFACTURED BY SQUARE D, SIEMENS, GENERAL ELECTRIC, OR APPROVED EQUAL.

1.30 PROVIDE FOR EVERY FUSE CLIP TO WHICH A CIRCUIT HAS BEEN CONNECTED, A NONRENEWABLE CARTRIDGE FUSE OF THE SIZE INDICATED ON THE DRAWINGS OR AS REQUIRED IN ACCORDANCE WITH THE MANUFACTURER'S REQUIREMENTS. ALL FUSES SHALL BE DUAL ELEMENT TIME DELAY UNLESS NOTED OTHERWISE.

1.31 CIRCUIT BREAKERS SHALL BE ENCLOSED MOLDED CASE, BOLT-ON (EXCEPT THAT SQUARE D I-LINE BREAKERS ARE ACCEPTABLE), WITH QUICK-MAKE, QUICK-BREAK TOGGLE MECHANISM, NON-FUSIBLE CONTACTS, AND INVERSE TIME SHORT CIRCUIT CHARACTERISTICS. BREAKERS SHALL BE TRIP-FREE ON OVERLOAD AND SHALL INDICATE CLEARLY WHETHER THEY ARE OPENED, CLOSED, OR TRIPPED. MULTI-POLE UNITS SHALL HAVE THERMAL ELEMENT IN EACH POLE AND SHALL HAVE A SINGLE HANDLE. CIRCUIT BREAKER SHORT CIRCUIT RATINGS SHALL BE 120 PERCENT OF THE AVAILABLE SHORT CIRCUIT CURRENT ON THE EXISTING ELECTRICAL SYSTEM; 10,000 AMPERES SYMMETRICAL MINIMUM FOR 208/120 VOLT SYSTEM. CONTRACTOR SHALL OBTAIN SYSTEM SHORT CIRCUIT CURRENTS FROM THE POWER COMPANY AND SHALL INCLUDE THIS INFORMATION IN HIS SHOP DRAWING SUBMITTAL TO THE OWNER'S REPRESENTATIVE. SERIES RATING OF CIRCUIT BREAKERS TO IMPROVE THE SHORT CURCIUT RATING IS NOT ALLOWED. CIRCUIT BREAKERS WITH A CONTINUOUS CURRENT TRIP SETING OF 1200A OR HIGHER OR WHICH CAN BE ADJUSTED TO 1200A OR HIGHER WITHOUT MODIFYING THE PROTECTED CIRCUIT, BUS AND/OR LOAD SHALL BE PROVIDED WITH ENERGY REDUCING MAINTENANCE SWITCHING WITH LOCAL STATUS INDICATOR UNLESS THE BREAKER HAS AN APPROVED EQUIVALENT METHOD TO REDUCE CLEARING TIME AND MITIGATE ARC FLASH. BREAKERS SHALL BE COMPATIBLE WITH PANELBOARDS PROVIDED. ALL 20 AMPERE, SINGLE POLE CIRCUIT BREAKERS FOR LIGHTING CIRCUITS SHALL BE "SWD" RATED. CIRCUIT BREAKERS FOR DWELLING UNIT BEDROOMS SHALL BE AFCI RATED AND CIRCUIT BREAKERS FOR AIR CONDITIONING AND REFRIGERATION UNITS SHALL BE HACR RATED. BREAKER PADLOCK OFF DEVICES SHALL BE OSHA LOCKOUT-TAGOUT APPROVED DEVICES PERMANENTLY AFFIXED TO THE BREAKER AND MANUFACTURED BY THE BREAKER MANUFACTURER.

1.32 LIGHTING FIXTURES AND LAMPS SHALL BE AS SCHEDULED ON THE DRAWINGS OR APPROVED EQUAL.

1.33 LED FIXTURES SHALL COMPLY WITH UL 1598 AND UL 8750. LED MODULES SHALL BE UL RECOGNIZED COMPONENTS WHICH COMPLY WITH IESNA LM-79 AND LM-80 STANDARDS. INDOOR LUMINAIRES SHALL BE UL LISTED FOR 25 DEGREES C AMBIENT ENVIRONMENTS. FIXTURES SHALL INCLUDE LONG-LIFE LED SYSTEMS COUPLED WITH AN ELECTRICAL DRIVER TO DELIVER OPTIMAL PERFORMANCE. FIXTURES SHALL HAVE A PROJECTED LIFE OF 60,000 HOURS MINIMUM AT 70 PERCENT LUMEN OUTPUT. THE DRIVER SHALL HAVE A UNIVERSAL VOLTAGE RATING OF 120-277V AND SHALL INCLUDE 0-10V DIMMING AS A STANDARD FEATURE. THE DIMMING DRIVER SHALL BE MATCHED TO THE DIMMER SWITCH. UNLESS OTHERWISE NOTED, FIXTURES SHALL BE 3500K WITH A CRI OF 85.

1.34 THE ELECTRICAL CONTRACTOR SHALL CONSULT THE ROOM FINISH SCHEDULE AS TO THE TYPE OF CEILING CONSTRUCTION. HE SHALL BE RESPONSIBLE FOR ORDERING THE PROPER FIXTURES WITH HARDWARE FOR INSTALLATION IN OR ON THE TYPE OF CEILING SPECIFIED.

1.35 ALL UNHEATED SPACES SHALL BE PROVIDED WITH A ZERO DEGREE MINIMUM STARTING TEMPERATURE BALLAST OR DRIVER.

1.36 ALL ADDITIONAL WIRING AND/OR CONDUCTORS REQUIRED FOR LIGHTING CONTROL INCLUDING THAT REQUIRED FOR SWITCHED RECEPTACLES, THREE-WAY SWITCHING, UNSWITCHED CONDUCTORS FOR EXIT SIGNS, EMERGENCY LIGHTS, NIGHT LIGHTS, AND OCCUPANCY SENSORS; AND LOW VOLTAGE WIRING FOR OCCUPANCY SENSING AND DIMMING CONTROL SHALL BE PROVIDED EVEN THOUGH NOT SPECIFICALLY SHOWN ON THE DRAWINGS.

1.37 MANUAL MOTOR STARTERS SHALL BE NEMA 1, FRACTIONAL HORSEPOWER TYPE FOR "ON-OFF" CONTROL OF SMALL MOTORS. PROVIDE STARTER WITH MELTING ALLOY TYPE THERMAL OVERLOAD RELAY. STARTERS SHALL BE AS MANUFACTURED BY SQUARE D, GENERAL ELECTRIC, SIEMENS, OR APPROVED EQUAL.

1.38 TELEPHONE/DATA SYSTEM

A. TELEPHONE/DATA SYSTEM WIRING IN WALLS AND CONCEALED LOCATIONS SHALL BE INSTALLED IN 3/4-INCH EMT TO AN ACCESSIBLE LOCATION, UNLESS NOTED OTHERWISE. ALL CONDUIT WITH PULL WIRE SHALL BE STUBBED ABOVE SUSPENDED CEILING FOR ~~INSTALLATION OF OPEN PLENUM RATED WIRING TO~~ TELEPHONE AND/OR DATA BACKBOXES. WIRING AND DEVICES ARE BY OTHERS. 1

B. THE CONTRACTOR SHALL LOCATE TELEPHONE AND/OR DATA OUTLETS AS INDICATED ON THE DRAWINGS AND IN ACCORDANCE WITH OWNER'S REQUIREMENTS. PROVIDE OUTLET BOX WITH BLANK COVER OR COVER WITH BUSHED OPENING AS DIRECTED BY THE OWNER OF THE SAME COLOR AS OTHER DEVICES IN THE AREA.

1.39 FIRE ALARM SYSTEM

A. THIS SECTION OF THE SPECIFICATIONS COVERS THE FURNISHING OF ALL LABOR, MATERIALS, AND ACCESSORIES NECESSARY FOR, BUT NOT NECESSARILY LIMITED TO, THE INTEGRATION OF FIRE ALARM SYSTEM COMPONENTS INTO THE EXISTING FIRE ALARM SYSTEM, AS LISTED HEREIN AND AS SHOWN ON THE DRAWINGS. ALL DEVICES SHALL HAVE A SIMILAR PHYSICAL APPEARANCE OF EXISTING SYSTEM EQUIPMENT AND HAVE ELECTRICAL CHARACTERISTICS COMPATIBLE WITH THE EXISTING SYSTEM.

B. THE SYSTEM SHALL CONFORM TO THE APPLICABLE REQUIREMENTS OF NFPA 70, 72, 99, AND 101.

C. PROVIDE SUBMITTALS FROM AN APPROVED FIRE ALARM SYSTEM MANUFACTURER OF CUT SHEETS WITH DEVICE LOADS, A RISER DIAGRAM WITH DEVICE QUANTITY AND WIRE SIZES, AND WIRING PLANS WITH WIRING ROUTING AND LENGTHS. INCLUDED WITH THE SUBMITTALS SHALL BE BATTERY SIZING CALCULATIONS AND VOLTAGE DROP CALCULATIONS USING THE ABOVE INFORMATION TO CONFIRM THAT THE SYSTEM IS CODE COMPLIANT.

D. SMOKE DETECTORS SHALL BE PHOTOELECTRIC TYPE. DETECTOR CIRCUITS SHALL BE OF THE TWO-WIRE TYPE WHEREBY THE DETECTOR OPERATING POWER IS TRANSMITTED OVER THE SAME CONDUCTORS AS THE INITIATING CIRCUIT. DETECTORS SHALL BE COMPATIBLE WITH THE CONTROL PANEL AND SHALL BE SUITABLE FOR USE IN A SUPERVISED CIRCUIT.

E. ALARM HORNS SHALL BE SEMI-FLUSH ELECTRO-MECHANICAL DESIGN WITH ELECTRONIC OPTICAL CONTROL FOR USE IN AN ELECTRICALLY SUPERVISED CIRCUIT AND SHALL HAVE A SOUND OUTPUT RATING OF AT LEAST 87DBA AT 10-FEET. HORNS SHALL BE PAINTED RED AND MOUNTED ON A STANDARD FOUR INCH SQUARE BY TWO INCH DEEP WALL BOX.

F. VISUAL ALARM INDICATORS SHALL BE SEMI-FLUSH, CONTAIN A XENON FLASHTUBE AND BE SUITABLE FOR USE IN AN ELECTRICALLY SUPERVISED CIRCUIT. VISUAL ALARM INDICATORS SHALL HAVE PHOTOMETRIC PROPERTIES AND BE LOCATED IN ACCORDANCE WITH THE VISUAL ALARM TABLES OF NFPA 72. LAMPS SHALL BE PROTECTED BY A THERMOPLASTIC LENS AND LABELED "FIRE" IN LETTERS AT LEAST 1/2-INCH HIGH.

G. AUDIBLE/VISUAL ALARM INDICATORS SHALL BE A FACTORY ASSEMBLED COMBINATION DEVICE COMPRISED OF A BELL OR HORN AND A XENON FLASHTUBE AS SPECIFIED ABOVE. COMBINATION DEVICES SHALL BE MOUNTED ON A STANDARD FOUR INCH SQUARE MOUNTING BOX.

H. INSTALLATION OF ALL WIRING FOR FIRE ALARM SYSTEMS SHALL BE IN CONDUIT, OR ELECTRICAL METALLIC TUBING. CONDUCTOR SUPPORT THROUGH THE USE OF BRIDLE RINGS, TIE WRAPS, ELECTRICAL TAPE, OR "HOMEMADE" HANGERS IS NOT PERMITTED. CONDUCTORS SHALL NOT REST ON SUSPENDED CEILINGS OR BE TIED TO CEILING WIRE SUPPORTS. ALL CIRCUIT CONDUCTORS SHALL BE IDENTIFIED WITHIN EACH ENCLOSURE WHERE A TAP, SPLICE, OR TERMINATION IS MADE.

I. THE CONTRACTOR AND EQUIPMENT MANUFACTURER SHALL JOINTLY GUARANTEE ALL WIRING AND EQUIPMENT FOR THIS SYSTEM TO BE FREE OF DEFECT IN WORKMANSHIP AND MATERIAL FOR A PERIOD OF ONE YEAR FROM THE DATE OF FINAL ACCEPTANCE.

J. THE ENTIRE FIRE ALARM SYSTEM INCLUDING ANY PREVIOUSLY EXISTING PORTIONS SHALL BE TESTED IN THE PRESENCE OF THE OWNER AND LOCAL AUTHORITIES. EXTENDED FIRE ALARM SYSTEMS REQUIRING ONLY NEW INDICATING, INITIATING, CONTROL, AND/OR MONITORING DEVICES SHALL BE TESTED IN ACCORDANCE WITH NFPA 72 REACCEPTANCE TESTING. THE CONTRACTOR SHALL PROVIDE ALL LABOR, EQUIPMENT, AND MATERIAL NEEDED FOR THE TEST WITHOUT ADDITIONAL CHARGE.

---000---

McCARTHY ENGINEERING ASSOCIATES, INC.
www.McCarthy-Engineering.com
2500 East High Street, Suite 630
Pottstown, PA 19464
Phone: 610.373.8001

Project No. 230004

Revision	Date	Description	Rev.By
1	8/9/2023	ADDENDUM 1	

This document and all information and work product represented by and contained herein, is the sole and exclusive property of McCarthy Engineering Associates, Inc.. The information contained herein is licensed only for limited use by the intended recipient, and no license, permission or authority is extended, directly or implied, to any party without the express written permission of McCarthy Engineering Associates, Inc.
Copyright, 2017, McCarthy Engineering Associates, Inc. All rights reserved

555 Van Reed Road, Suite 2, Wyomissing, PA 19610
McCARTHY ENGINEERING ASSOCIATES, INC.
www.McCarthy-Engineering.com
Phone: 610.373.8001
2500 East High Street, Suite 630, Pottstown, PA 19464

SEAL:

SPECIFICATIONS

" PUBLIC WORKS FACILITY "

Client: WYOMISSING BOROUGH
Location: WYOMISSING BOROUGH, BERKS COUNTY, PENNSYLVANIA
Date: JULY 19, 2023

DRAWN BY:	PROJ. MANAGER:
SW	NEC
PRINCIPAL: JCM	SCALE: AS NOTED

DRAWING NO. E-1.0

PROJECT NO. 230004

ISSUED FOR BID JULY 19, 2023
NOT FOR CONSTRUCTION

PLUMBING FIXTURE PIPING SCHEDULE

REF NO	FIXTURE	CW (IN)	HW (IN)	SAN (IN)	TRAP (IN)	VENT (IN)	REMARKS
P-1	WATER CLOSET	1/2		4		2	ADA ACCESSIBLE, PRESSURE-ASSISTED TANK TYPE, SEE NOTE 1
P-2	URINAL	3/4		2	2	1 1/4	ADA ACCESSIBLE, WALL MOUNT, BATTERY POWERED SENSOR OPERATED ACTIVATED ASSEMBLY FLUSHOMETER VALVE.
P-3	LAVATORY	1/2	1/2	2	1 1/2	1 1/4	ADA ACCESSIBLE, UNDER MOUNT, COUNTER MOUNT MANUAL FAUCET ASSEMBLY, SEE NOTES 2 & 3
P-4	HAND WASHFOUNTAIN	1/2	1/2	2	1 1/2	1 1/4	ADA ACCESSIBLE, WALL MOUNT, INFRARED SENSOR-ACTIVATED CONVECTIONAL FAUCETS
P-5	SHOWER	1/2	1/2	2	2	1 1/4	ADA ACCESSIBLE, ONE PIECE TRANSFER SHOWER ENCLOSURE, PRESSURE BALANCE SHOWER VALVE
P-6	SINK	1/2	1/2	2	1 1/2	1 1/4	COUNTER MOUNT. MANUAL FAUCET ASSEMBLY SEE NOTE 3
P-7	HOSE BIBB	3/4					WALL MOUNT, RECESSED HOSE BOX WITH LOCKABLE COVER
P-8	WATER COOLER	1/2		2	1 1/4	1 1/4	ADA ACCESSIBLE, WALL MOUNT, BI-LEVEL, FRONT PUSHBUTTON
P-9	EMERGENCY EYEWASH	1/2*	1/2*				*TEPID WATER SUPPLY, SEE NOTE 4
P-10	MOP SERVICE BASIN	1/2	1/2	3	3	2	FLOOR MOUNT, WALL MOUNT MANUAL FAUCET ASSEMBLY

NOTES:
1. COORDINATE FLUSHING HANDLE LOCATION WITH WIDE SIDE OF TOILET ROOM OR STALL FOR EACH FIXTURE.
2. COORDINATE COUNTER TOP ROUGH-IN HOLE REQUIREMENTS WITH THE GENERAL CONTRACTOR.
3. MOUNT INDIVIDUAL THERMOSTATIC MIXING VALVE BELOW FIXTURE.
4. TEPID WATER SUPPLY FROM EMERGENCY TEMPERING VALVE ASSEMBLY.

PLUMBING FIXTURE SCHEDULE

SYM	FIXTURE	DESCRIPTION	SPECIFICATIONS
P-1	WATER CLOSET ADA	FLOOR MOUNT, BOTTOM OUTLET, ELONGATED BOWL, 12 " ROUGH-IN, HIGH EFFICIENCY, ULTRA LOW CONSUMPTION 1.1 GPF, 16-1/2 " RIM HEIGHT.	AMERICAN STANDARD CADET FLOWISE PRESSURE-ASSISTED SIPHON JET ACTION HIGH EFFICIENCY TANK TYPE TOILET, MODEL 2467.100 , WHITE VITREOUS CHINA WITH EVERCLEAN SURFACE CLOSE-COUPLED FLUSHOMETER TANK , SPEED CONNECT TANK/BOWL COUPLING SYSYTEM AND 2 BOLT CAPS. COMMERCIAL HEAVY DUTY WHITE OPEN FRONT SEAT. PROVIDE FLEXIBLE SUPPLY WITH WALL FLANGES AND LOOSE KEY STOP. SEE NOTE 1
P-2	URINAL ADA	WALL HUNG, 3/4 INCH INLET, TOP SPUD, LOW CONSUMPTION, HIGH EFFICIENCY, ULTRA LOW CONSUMPTION 0.125 GPF	AMERICAN STANDARD DECORUM HIGH EFFICIENCY URINAL SYSTEM, MODEL 6042.633, WHITE VITREOUS CHINA WITH EVERCLEAN SURFACE , MODERN DEEP SUMP DESIGN WASHOUT WITH STRAINER, 2" THREADED OUTLET CONNECTION AND EXPOSED BATTERY POWERED SELECTRONIC FLUSHOMETER VALVE. PROVIDE FIXTURE SUPPORT CONSTRUCTED OF CAST IRON AND/OR STEEL AND COMPLETELY CONCEALED BEHIND THE FINISHED WALL SURFACE. SUPPORT SHALL BE COMPLETE WITH A FACEPLATE AND FLOOR ANCHORS. FIXTURE LOADING SHALL NOT BE ON THE WALL.
P-3	LAVATORY ADA	UNDER-MOUNT RECTANGULAR BASIN , 20-1/4" X 15-11/16" X 7-5/16" OVERALL DIMENSIONS CENTER DRAIN AND FRONT OVERFLOW	KOHLER CAXTON MODEL K-20000, WHITE VITREOUS, NO FAUCET HOLES REQUIRES COUNTER - MOUNT FAUCET. KOHLER KUMIN MODEL K-98827-4, MANUAL SINGLE HANDLE FAUCET FAUCET, CERAMIC DISK VALVES, HIGH-TEMPERATURE LIMIT SETTING AND POP-UP DRAIN WITH 1-1/4" TAIL PIECE. PROVIDE P-TRAP, FLEXIBLE SUPPLIES WITH WALL FLANGES AND LOOSE KEY STOPS. SEE NOTE 2
P-4	HAND WASHFOUNTAIN ADA	WALL MOUNT, STAINLESS STEEL, 36" SEMI-CIRCULAR, INFRARED.	BRADLEY MODEL SN2023, ACCOMMODATES 3 USERS AT ONE TIME, SECTIONAL SPRAYHEAD MODULE IS CONTROLLED BY INFRARED SENSOR-ACTUATED SOLENOID. THERMOSTATIC MIXING VALVE AND FLOW RESTRICTOR KEEPS FLOW RATE CONSTANT 0.5 GPM PER STATION.
P-5	SHOWER ADA	ONE-PIECE ENCLOSURE, PRE-LEVELED BASE, CENTER DRAIN, 3/4" SKIRT, NO THRESHOLD, EXTERIOR NOMINAL DIMENSIONS 38" X 38-1/4" X 77"	AQUATIC ACCESSIBLE TRANSFER SHOWER, MODEL 1363BFSC, WHITE ACRYLX APPLIED ACRYLIC SURFACE, SHALL BE FURNISHED COMPLETE WITH GRAB BARS, FOLD-UP SEAT, PRESSURE BALANCE MIXING VALVE, HAND-HELD SHOWER ASSEMBLY WITH SLIDE BAR, CUTAIN ROD AND SHOWER CURTAIN.
P-6	SINK ADA	SINGLE BOWL UNDERMOUNT WITH 33 X 22 X 9" OVERALL DIMENSIONS AND REAR CENTER DRAIN	AMERICAN STANDARD EDGEWATER MODEL 18SB.9332211.075, 18 GAUGE 304 STAINLESS STEEL WITH A POLISHED SATIN FINISH, SINGLE HOLE, ZERO RADIUS CORNERS, FULL SPRAY SIDES AND BOTTOM SOUND PADS, BOTTOM AND STRAINER. PROVIDE MOUNTING HARDWARE. MOEN ARBOR MODEL 7594, PULL-DOWN KITCHEN FAUCET ASSEMBLY, HIGH-ARCH-SPOUT WITH THREE-FUNCTION PULL-DOWN SPRAY, SINGLE HANDLE DURALAST CARTRIDGE, 1.5 GPM MAXIMUM FLOW RATE. P-TRAP ASSEMBLY, FLEXIBLE SUPPLIES WITH WALL FLANGES AND LOOSE KEY STOPS. SEE NOTE 2.
P-7	HOSE BIBB	ROUGH BRASS FINISH	WOODFORD MODEL 24. ANTI-SIPHON FAUCET, 3/4 INCH HOSE CONNECTION WITH VACUUM BREAKER AND METAL HANDLE WHEEL.
P-8	WATER COOLER ADA	WALL MOUNT, BI-LEVEL, STAINLESS STEEL	ELKAY MODEL LZSTL8SC. FILTERED REFRIGERATION UNIT WITH SELF-CLOSING EASY-TOUCH CONTROLS ON FRONT AND BOTH RIGHT AND LEFT SIDES.
P-9	EMERGENCY EYEWASH	FREE STANDING PEDESTAL MOUNT	STAINLESS STEEL BOWL, SCHEDULE 40 GALVANIZED PIPE AND FITTINGS, 1/2 INCH U.S. MADE CHROME-PLATED BRASS STAY-OPEN BALL VALVE, POWDER-COATED CAST ALUMINUM FLAG HANDLE AND FLOOR FLANGE. UNIT SHALL HAVE (2) POLYPROPYLENE GS-PLUS™ SPRAY HEADS WITH INTEGRAL “FLIP-TOP” DUST COVERS, FILTERS AND 1.6 GPM FLOW CONTROL ORIFICES MOUNTED ON A CHROME-PLATED BRASS EYEWASH ASSEMBLY. UNIT SHALL INCLUDE ANSI COMPLIANT SIGN. UNIT SHALL BE HYDROSTATICALLY TESTED TO MEET OR EXCEED ANSI Z358.1 – 2014, AND COME WITH A FULL 2-YEAR WARRANTY; GUARDIAN EQUIPMENT G1825 OR APPROVED EQUAL. SEE NOTE 3
P-10	MOP SERVICE BASIN	FLOOR MOUNT, SERVICE BASIN, 24 X 24 X 10 INCH NOMINAL DIMENSIONS WITH 1 INCH WIDE SHOULDERS, STAINLESS STEEL BOTTOM OUTLET STRAINER.	FIAT PRODUCTS MOLDED STONE, MODEL MSB 2424 WITH MODEL MSG STAINLESS STEEL WALL GUARDS. T & S BRASS MODEL B-0655-BSTP WALL MOUNT SERVICE SINK FAUCET ASSEMBLY, 8 INCH CENTERS, LEVER HANDLES WITH COLOR CODED INDEXES, SPOUT WITH VACUUM BREAKER, PAIL HOOK AND 3/4 INCH HOSE CONNECTION, BUILT-IN SERVICE STOPS. 3 INCH DEEP SEAL TRAP

NOTES:
1.COORDINATE FIXTURE FLUSHING HANDLE LOCATION WITH WIDE SIDE OF TOILET ROOM OR STALL FOR EACH FIXTURE.
2. PROVIDE INDIVIDUAL THERMOSTATIC MIXING VALVE WHICH COMPLIES WITH ASSE 1070.
3.PROVIDE EMERGENCY TEMPERING VALVE ASSEMBLY WHICH COMPLIES WITH ASSE 1071 AND ANSI Z358.1 FOR TEPID WATER SUPPLY TO COMBINATION SHOWER AND EYE/FACE WASH UNIT.

PLUMBING DRAINAGE SPECIALTIES SCHEDULE

REF NO	DESCRIPTION	SAN (IN)	TRAP (IN)	VENT (IN)	REMARKS
FCO	FLOOR CLEANOUT - SHALL BE JAY R. SMITH MFG. CO., SERIES 4220S, RATED FOR HEAVY LOAD TRAFFIC; ADJUSTABLE CLEANOUT WITH SCORIATED COVER	4			
FD1	FLOOR DRAIN - SHALL BE WADE, 1100-A5, CAST IRON DRAIN BODY WITH FLANGE, INTEGRAL CLAMPING COLLAR, SEEPAGE OPENINGS AND FIVE (5) INCH ROUND ADJUSTABLE SATIN FINISH NICKEL BRONZE TOP.	2	2	2	TOILET ROOMS & MECH SPACES SEE NOTE 1
FD2	FLOOR DRAIN - SHALL BE WADE, 1100-A5, CAST IRON DRAIN BODY WITH FLANGE, INTEGRAL CLAMPING COLLAR, SEEPAGE OPENINGS AND FIVE (5) INCH ROUND ADJUSTABLE SATIN FINISH NICKEL BRONZE TOP.	3	3	2	NEW BUILDING MEZZANINE SEE NOTE 1
FS	FLOOR SINK - SHALL BE ZURN MODEL Z-1901-33 A.R.E. SANI-FLOR RECEPTOR 12 X 12 X 8 INCH DEEP, CAST IRON BODY, MEDIUM DUTY GRATE WITH SLOTS, WHITE ACID RESISTING PORCELAIN ENAMEL INTERIOR AND TOP, WHITE ACID RESISTANT COATED ANTI-SPLASH BOTTOM DOME STRAINER.	4	4	2	SEE NOTE 1 & 3
TD1	TRENCH DRAIN SYSTEM SHALL BE ZURN Z886 WITH 80" LONG CHANNELS , 6-1/4" WIDE REVEAL AND A 4" THROAT. MODULAR CHANNEL SECTIONS SHALL BE MADE OF 0% WATER ABSORBENT HIGH DENSITY POLYETHYLENE (HDPE). CHANNELS SHALL HAVE A POSITIVE MECHANICAL CONNECTION BETWEEN CHANNEL SECTIONS THAT WILL NOT SEPARATE DURING THE INSTALLATION AND MECHANICALLY LOCK INTO THE CONCRETE SURROUND A MINIMUM OF EVERY 10". CHANNELS WEIGH LESS THAN 2.31 LBS. PER LINEAR FOOT, HAVE A SMOOTH, 1-1/2" RADIUSED SELF CLEANING BOTTOM WITH A MANNING'S COEFFICIENT OF 0.009 AND .75% OR NEUTRAL 0% BUILT IN SLOPE. CHANNELS HAVE REBAR CLIPS STANDARD TO SECURE TRENCH IN ITS FINAL LOCATION. CHANNELS ARE PROVIDED WITH STANDARD DGC GRATES THAT LOCK DOWN WITH LOCKDOWN BARS TO THE CHANNEL AND IS NOT INTENDED FOR DYNAMIC TRAFFIC LOADINGS. ZURN 5-3/8" WIDE REVEAL DUCTILE IRON SLOTTED GRATE CONFORMING TO ASTM SPECIFICATION A536-84, GRADE 80-55-06. DUCTILE IRON GRATE IS RATED CLASS C PER THE DIN EN1433 TOP LOAD CLASSIFICATIONS. SUPPLIED IN 20" [508MM] NOMINAL LENGTHS WITH 1/2" WIDE SLOTS, AND 3/4" BEARING DEPTH. GRATE HAS AN OPEN AREA OF 28.1 SQ. IN PER FT.	4	4	2	NEW BUILDING GARAGE [104] SEE NOTE 2
TD2	TRENCH DRAIN SYSTEM SHALL BE ZURN MODEL Z874-12, 80" LONG CHANNELS, 17" WIDE REVEAL AND A 12" WIDE THROAT. MODULAR CHANNEL SECTIONS SHALL BE MADE OF 0% WATER ABSORBENT HIGH DENSITY POLYETHYLENE (HDPE). CHANNELS SHALL HAVE A POSITIVE MECHANICAL CONNECTION BETWEEN CHANNEL SECTIONS THAT WILL NOT SEPARATE DURING INSTALLATION AND SHALL MECHANICALLY LOCK INTO CONCRETE SURROUND A MINIMUM OF EVERY 10". CHANNELS SHALL WEIGH LESS THAN 6.6 LBS. PER LINEAR FOOT HAVE SMOOTH 3.5" RADIUSED SELF-CLEANING BOTTOM WITH A MANNING'S COEFFICIENT OF 0.009 AND 1.00% OR NEUTRAL 0% BUILT-IN SLOPE. CHANNELS SHALL HAVE ALL GRATES LOCKED DOWN. CHANNELS COME WITH CLIPS ATTACHED TO THE FRAME TO ACCOMMODATE VERTICAL RE-BAR FOR POSITIONING AND ANCHORING PURPOSES. SHALL BE PROVIDED WITH THE STANDARD DGC GRATE, ZURN 16-1/4" WIDE DUCTILE IRON SLOTTED GRATE, WHICH LOCKS DOWN TO THE FRAME WITH 4 INDIVIDUAL BOLT ANCHORS PER GRATE. DUCTILE IRON CONFORMS TO ASTM SPECIFICATION A536-84, GRADE 80-55-06. DUCTILE IRON GRATE IS RATED CLASS C PER THE DIN EN1433 TOP LOAD CLASSIFICATIONS. SUPPLIED IN 20" NOMINAL LENGTHS WITH 13/16" WIDE SLOTS, AND 1-3/4" BEARING DEPTH. GRATE HAS AN OPEN AREA OF 118 SQ. IN. PER FT. THE 1/4" THICK CARBON STEEL FRAME ASSEMBLY CONFORMS TO ASTM SPECIFICATION A36 WITH 10 - 4" LONG CONCRETE ANCHORS PER 80". THE FRAME SHALL HAVE A POWDER COATED FINISH. ALL WELDS MUST BE PERFORMED BY A CERTIFIED WELDER PER ASTM STANDARD AWS D1.1. FRAMES SHALL BE PRODUCED IN THE USA.	4	4	2	NEW BUILDING WASH BAY [105] SEE NOTE 2

NOTES:
1. PROVIDE WITH BARRIER TYPE FLOOR DRAIN TRAP SEAL PROTECTION DEVICE COMPLYING WITH ASSE 1072.
2. SUBMIT MANUFACTURERS' LAYOUT PLAN FOR EACH TRENCH DRAIN SYSTEM SHOWING OVERALL LENGTH, CATCH BASIN/OULET LOCATIONS AND LISTING OF ALL UNITS BEING FURNISHED. COORDINATE EACH TRENCH SYSTEM FINAL OVERALL LENGTH AND CATCH BASIN/OUTLET LOCATIONS WITH THE ARCHITECTURAL DRAWINGS. PROVIDE (2) TWO TRENCH DRAIN SHOVELS FOR DRAIN CLEANOUT. PROVIDE (5) FIVE EXTRA TRENCH GRATES. TURN GRATES OVER TO THE OWNER UPON PROJECT FINAL COMPLETION.
3. COORDINATE GRATE OPENING REQUIREMENT WITH INDIRECT DRAINS FROM ICE MACHINE.

LEGEND AND ABBREVIATIONS

EXISTING OR WORK BY OTHERS
WORK BY THIS CONTRACTOR
SANITARY PIPING (SAN)
SANITARY VENT PIPING (SV)
COLD WATER PIPING (CW)
HOT WATER PIPING (HW)
HOT WATER RECIRCULATING PIPING (HWR)
G — GAS PIPING (G)
CA — COMPRESSED AIR PIPING (CA)
PIPE TURNING UP
PIPE TURNING DOWN
WATER HAMMER ARRESTOR (WHA)
BALL VALVE
CHECK VALVE
GATE VALVE
PRESSURE REDUCING VALVE (PRV)
TEMPERATURE & PRESSURE VALVE
THERMOSTATIC MIXING VALVE
GAS COCK
THERMOMETER
PRESSURE GAUGE W/ COCK
CIRCULATING PUMP (INLINE TYPE)
P– FIXTURE REFERENCE NUMBER
METER
GAS METER
CONNECT TO EXISTING

&	AND
ABV	ABOVE
BLDG	BUILDING
BLW	BELOW
CLG	CEILING
CO	CLEANOUT
CONT	CONTINUE
DF	DRINKING FOUNTAIN
DFU	DRAINAGE FIXTURE UNIT
DN	DOWN
DWG	DRAWING
ELEC	ELECTRIC
EMERG	EMERGENCY
EXG	EXISTING
FAI	FRESH AIR INLET
FCO	FLOOR CLEANOUT
FD	FLOOR DRAIN
FLR	FLOOR
GCO	GRADE CLEANOUT
HB	HOSE BIBB
LAV	LAVATORY
MBH	THOUSAND BRITISH THERMAL UNIT
MSB	MOP SERVICE BASIN
RECIRC	RECIRCULATION
SHWR	SHOWER
TD	TRENCH DRAIN
URI	URINAL
VTR	VENT THRU ROOF
WC	WATER CLOSET
WCO	WALL CLEANOUT

EMERGENCY STATION DESIGN NOTES:

1. THE OCCUPATIONAL SAFETY AND HEALTH ADMINISTRATION (OSHA), 29 CFR 1910.151, REQUIRES THAT: "WHERE THE EYES OR BODY OF ANY PERSON MAY BE EXPOSED TO INJURIOUS CORROSIVE MATERIALS, SUITABLE FACILITIES FOR QUICK DRENCHING OR FLUSHING OF THE EYES AND BODY SHALL BE PROVIDED WITHIN THE WORK AREA FOR IMMEDIATE EMERGENCY USE." DEPARTMENT OF ENERGY (DOE) HEALTH AND SAFETY REGULATIONS, FOUND IN 10 CFR 851, FOLLOW MOST OSHA REGULATIONS. DOE HAS STATED "WHERE THIS INJURIOUS EXPOSURE OF CORROSIVE MATERIALS TO THE EYES OR BODY POTENTIAL EXISTS, THERE MUST BE AN EMERGENCY EYE WASH FACILITY THAT MEETS ANSI STANDARDS."
   EQUIPMENT DESIGN BASIS IS PER THE INTERNATIONAL PLUMBING CODE (IPC) SECTION 411, WHICH REQUIRES THE USE OF ANSI/ISEA Z358.1 COMPLIANT EQUIPMENT WHENEVER EYEWASH OR SHOWER EQUIPMENT IS NEEDED, AND THAT WASTE CONNECTIONS SHALL NOT BE REQUIRED FOR EMERGENCY SHOWERS AND EYEWASH STATIONS. DESIGN BASIS FOR EMERGENCY STATIONS IS EYE WASH STATION IN MECHANICS SHOP [105] AREA.
2. THE EYE WASH STATION EQUIPMENT SELECTION HAS CAPACITY TO DELIVER 0.4 GALLONS OF WATER PER MINUTE FOR 15 MINUTES AT A 100 DEGREE FAHRENHEIT TEMPERATURE RISE FOR A TEPID WATER SUPPLY TEMPERATURE OF 70 DEGREES FAHRENHEIT BASED ON A DOMESTIC WATER SUPPLY AMBIENT TEMPERATURE OF 40 DEGREE FAHRENHEIT.
3. THE OWNERS FACILITIES SAFETY REPRESENTATIVE AND OR INSURANCE CARRIER SHALL CONFIRM FINAL EMERGENCY EQUIPMENT TYPE(S), LOCATION(S) AND WATER DELIVERY TEMPERATURES MEET HAZARD ASSESSMENT AND OPERATIONAL REQUIREMENTS FOR HAZARDS MATERIALS ENCOUNTERED OR GENERATED IN WORK AREAS.

GENERAL NOTES:

1. ALL PLUMBING WORK SHALL CONFORM TO THE LATEST PLUMBING CODE OF THE BOROUGH OF WYOMISSING, PA AND SUBSEQUENT AMENDMENTS THERETO.
2. DRAWINGS ARE DIAGRAMMATIC. COORDINATE ALL FIXTURE LOCATIONS AND NEW PIPE ROUTING WITH EXISTING FIELD CONDITIONS, INCLUDING BUT NOT LIMITED TO EXISTING PLUMBING SYSTEMS PIPING, STRUCTURAL COMPONENTS AND ARCHITECTURAL DETAILS PRIOR TO INSTALLATION.
3. VERIFY LOCATIONS, MOUNTING HEIGHTS, TRIM LOCATIONS, ETC. FOR ALL PLUMBING FIXTURES WITH THE ARCHITECT PRIOR TO INSTALLATION. P-__ DESIGNATES FIXTURE AND FIXTURE TRIM. MOUNTING OF ALL ADA FIXTURES AND RELATED TRIM TO MEET THE AMERICAN DISABILITIES ACT GUIDELINES AND ANSI REQUIREMENTS FOR PEOPLE WITH DISABILITIES.
4. CONCEAL ALL PIPING IN WALLS/CHASE SPACE, BELOW FLOORS, AND ABOVE CEILINGS UNLESS OTHERWISE NOTED. INSTALL ALL WATER SUPPLY PIPING IN EXTERIOR WALLS ON THE INSIDE (WARM SIDE) OF THE BUILDING INSULATION. SEAL ALL PIPING PENETRATIONS THROUGH RATED ASSEMBLIES ACCORDINGLY. REFER TO ARCHITECTURAL DRAWINGS FOR FIRE AND SOUND RATED PARTITIONS, CEILINGS, AND FLOORS.
5. DRAWING INDICATES THE GENERAL SCOPE OF WORK ASSOCIATED WITH THE REMOVAL OF EXISTING MATERIALS, EQUIPMENT, AND PIPING SYSTEMS, BUT IS NOT NECESSARILY INCLUSIVE OF EVERY EXISTING CONDITION. THE FULL EXTENT OF REMOVAL WORK SHALL BE DETERMINED IN THE FIELD BASED ON THE ACTUAL CONDITIONS ENCOUNTERED AND AS REQUIRED FOR THE PROPER EXECUTION OF ALL TRADES WORK.
6. THE PLUMBING CONTRACTOR SHALL BE RESPONSIBLE TO CLEARLY IDENTIFY ALL PLUMBING FIXTURES AND EQUIPMENT THAT IS TO BE REMOVED AND REVIEW WITH THE OWNER'S REPRESENTATIVE PRIOR TO STARTING ANY DEMOLITION WORK.
7. REMOVAL OF ALL EQUIPMENT, PIPING, FIXTURES, ETC. SHALL INCLUDE ALL RELATED SUPPORTS, HANGERS, ETC. WHERE PIPING IS NOTED TO BE ABANDONED IN WALLS OR FLOORS, PIPING SHALL BE REMOVED TO BEYOND FINISH SURFACE, CAPPED OR PLUGGED IN APPROVED MANNER. PATCH SURFACE AND FINISH TO MATCH ADJACENT CONDITIONS. CLOSE OFF AND SEAL TIGHT ALL WALL, FLOOR, AND ROOF PENETRATIONS NOT BEING UTILIZED FOR NEW PIPING SYSTEMS SO AS TO MAINTAIN STRUCTURAL INTEGRITY OF SURROUNDING ASSEMBLY. THE REMOVAL OF ALL FIXTURE BRANCH PIPING SHALL BE BACK TO LAST ACTIVE PIPING TAKE-OFF, THERE SHALL BE NO DEAD END SECTIONS OF PIPE. CAP AND PLUG ALL OPEN END PIPE IN CODE APPROVED MANNER.
8. ALL MATERIALS, EQUIPMENT, FIXTURES NOT REUSED OR CLAIMED BY THE OWNER SHALL BECOME THE PROPERTY OF THE CONTRACTOR AND BE REMOVED PROMPTLY FROM THE PREMISES BY THE CONTRACTOR. ANY DEMOLITION ITEMS IN QUESTION SHALL BE REVIEWED WITH THE OWNERS REPRESENTATIVE PRIOR TO REMOVAL. ALL SPACES SHALL BE KEPT FREE OF DEBRIS AT ALL TIMES.

McCARTHY ENGINEERING ASSOCIATES, INC.
www.McCarthy-Engineering.com
2500 East High Street, Suite 630
Pottstown, PA 19464
Phone: 610.373.8001

Project No.
230004

Revision	Date	Description	Rev.By
1	8/9/2023	ADDENDUM 1	

This document and all information and work product represented by and contained herein, is the sole and exclusive property of McCarthy Engineering Associates, Inc.. The information contained herein is licensed only for limited use by the intended recipient, and no license, permission or authority is extended, directly or implied, to any party without the express written permission of McCarthy Engineering Associates, Inc.
Copyright, 2017, McCarthy Engineering Associates, Inc. All rights reserved

555 Van Reed Road
Suite 2
Wyomissing, PA 19610
McCARTHY ENGINEERING ASSOCIATES, INC.
www.McCarthy-Engineering.com
Phone: 610.373.8001
2500 East High Street
Suite 630
Pottstown, PA 19464

SEAL:

PLUMBING
COVER SHEET
" PUBLIC WORKS FACILITY "

Client: WYOMISSING BOROUGH
Location: WYOMISSING BOROUGH, BERKS COUNTY, PENNSYLVANIA
Date: JULY 19, 2023

DRAWN BY:	PROJ. MANAGER:
EPG	NEC
PRINCIPAL:	SCALE:
JCM	AS NOTED

DRAWING NO.
P-0

PROJECT NO.
230004

ISSUED FOR BID JULY 19, 2023
NOT FOR CONSTRUCTION

McCARTHY
ENGINEERING ASSOCIATES, INC.
www.McCarthy-Engineering.com
2500 East High Street, Suite 630
Pottstown, PA 19464
Phone: 610.313.8001

Project No.
230004

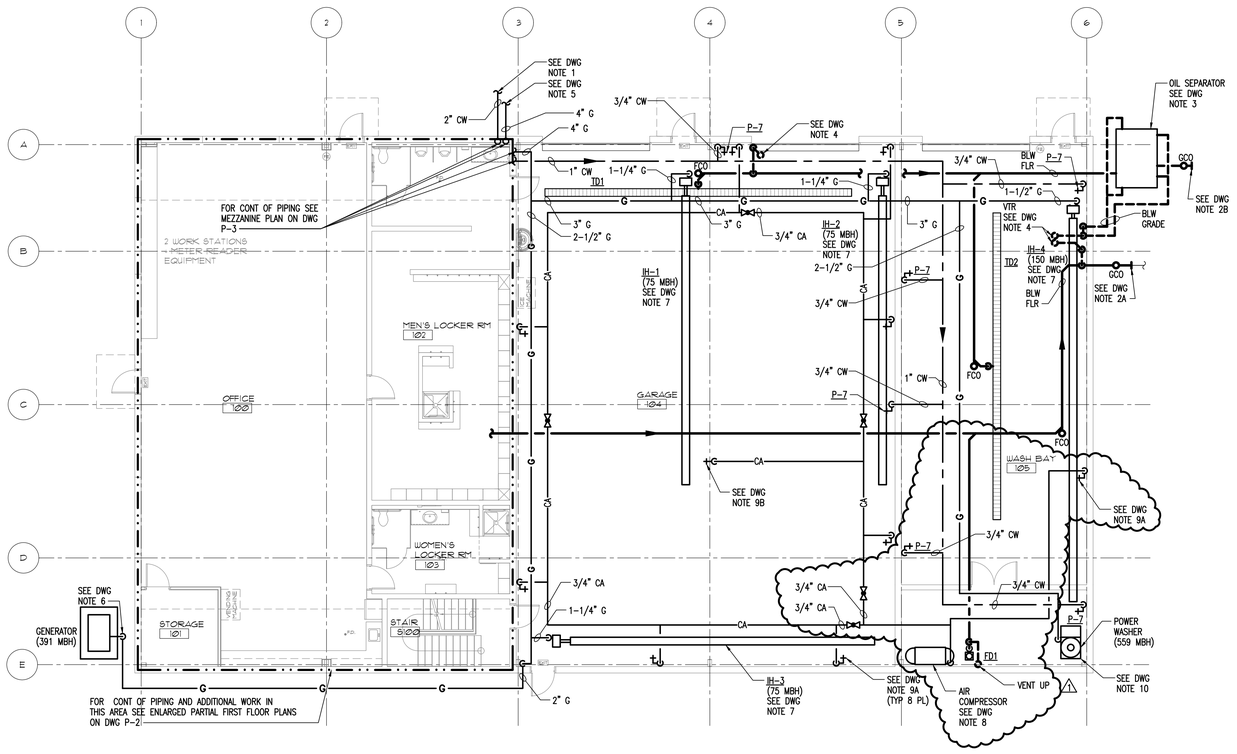

PLUMBING FIRST FLOOR PLAN – DOMESTIC WATER, DRAINAGE, GAS AND COMPRESSED AIR SYSTEMS PIPING

SCALE: 1/8" = 1'-0"

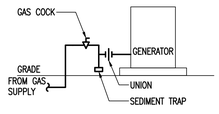

GAS PIPING DIAGRAM

NO SCALE

DRAWING NOTES:

1. PROVIDE BUILDING DOMESTIC WATER SUPPLY LINE AND DISTRIBUTION PIPING AS SHOWN. WATER SUPPLY LINE SHALL BE EXTENSION OF EXISTING WATER SERVICE SERVING THE EXISTING BUILDING. SEE EXISTING/NEW WORK BUILDING PLANS ON DRAWING P-4 FOR ADDITIONAL INFORMATION AND REFER TO CIVIL SITE UTILITY PLANS FOR ROUTING OF EXTERIOR PIPING. PRIOR TO THE START OF ANY NEW WATER SUPPLY SYSTEM WORK THIS CONTRACTOR IS RESPONSIBLE FOR VERIFICATION OF TIE-IN POINT AND PIPE ROUTING WITH CIVIL SITE UTILITIES DRAWINGS.

2A. PROVIDE SANITARY BUILDING DRAINAGE PIPING AS SHOWN AND CONNECT TO SANITARY BUILDING SEWER. REFER TO SITE UTILITY PLANS FOR FINAL LOCATION. PRIOR TO THE START OF ANY NEW SANITARY DRAINAGE SYSTEM WORK THIS CONTRACTOR IS RESPONSIBLE FOR VERIFICATION OF INVERT ELEVATION AT TIE-IN POINT AND ROUTING WITH BUILDING FOOTINGS.

2B. PROVIDE GARAGE AND WASH BAY BUILDING DRAINAGE PIPING AS SHOWN AND CONNECT TO SANITARY BUILDING SEWER. REFER TO SITE UTILITY PLANS FOR FINAL LOCATION. PRIOR TO THE START OF ANY NEW SANITARY DRAINAGE SYSTEM WORK THIS CONTRACTOR IS RESPONSIBLE FOR VERIFICATION OF INVERT ELEVATION AT TIE-IN POINT AND ROUTING WITH BUILDING FOOTINGS.

3. EXTERIOR OIL SEPARATOR, SEE OIL SEPARATOR DESIGN – EQUIPMENT NOTES AND OIL SEPARATOR RISER DIAGRAM ON DRAWING P-6.

4. ROUTE NEW VENT PIPING AS SHOWN ON SANITARY RISER DIAGRAM AND AS HIGH AS POSSIBLE ABOVE NEW CEILINGS (WHERE APPLICABLE) AND CONNECT TO VENT THROUGH ROOF. PRIOR TO THE START OF ANY VENT SYSTEM WORK THIS CONTRACTOR IS RESPONSIBLE FOR VERIFICATION OF VENT PIPE ROUTING AND VENT TERMINAL LOCATION WITH THE OWNER.

5. PROVIDE BUILDING GAS SUPPLY LINE AND DISTRIBUTION PIPING AS SHOWN. GAS SUPPLY LINE SHALL BE EXTENSION OF EXISTING GAS SERVICE SERVING THE EXISTING BUILDING., SEE FLOOR PLAN ON DRAWING P-4 FOR ADDITIONAL INFORMATION AND REFER TO CIVIL SITE UTILITY PLANS FOR ROUTING OF EXTERIOR PIPING. PRIOR TO THE START OF ANY NEW GAS SUPPLY SYSTEM WORK THIS CONTRACTOR IS RESPONSIBLE FOR VERIFICATION OF PIPE ROUTING WITH CIVIL SITE UTILITIES DRAWINGS.FOR GAS LOAD ESTIMATE AND SIZING INFORMATION SEE "GAS METER MANIFOLD PIPING DIAGRAM" ON DRAWING P-5.

6. THE PLUMBING CONTRACTOR IS RESPONSIBLE FOR FINAL GAS CONNECTION TO GENERATOR, CONNECTION SHALL BE COMPLETE WITH A SHUTOFF VALVE, UNION, SEDIMENT TRAP AND ANY REGULATORS NECESSARY TO ENSURE PROPER EQUIPMENT OPERATION (COORDINATE WITH THE RECOMMENDATIONS OF THE EQUIPMENT MANUFACTURER). SEE GAS PIPING DIAGRAM ON THIS DRAWING.

7. THE PLUMBING CONTRACTOR SHALL CONNECT GAS LINE TO MECHANICAL UNIT, CONNECTION TO BE COMPLETE WITH DIRT LEG, ISOLATION GAS VALVE AND UNION. PRIOR TO THE START OF ANY NEW GAS SUPPLY SYSTEM WORK THIS CONTRACTOR IS RESPONSIBLE FOR VERIFICATION OF PIPE ROUTING AND POINT OF CONNECTION TO UNIT WITH THE MECHANICAL CONTRACTOR.

8. PROVIDE COMPRESSED AIR SYSTEM SOURCE EQUIPMENT AND PIPING AS SHOWN, SEE "AIR COMPRESSOR PIPING DIAGRAM" AND "COMPRESSED AIR SYSTEM EQUIPMENT & MATERIALS NOTES" ON DRAWING P-3.

9A. PROVIDE COMPRESSED AIR OUTLET SEE "COMPRESSED AIR DROP DIAGRAM" ON DRAWING P-3. PRIOR TO THE START OF ANY COMPRESSED AIR SUPPLY SYSTEM WORK THIS CONTRACTOR IS RESPONSIBLE FOR VERIFICATION OF PIPE ROUTING AND LOCATIONS OF DROPS IN THE FIELD WITH THE OWNER.

9B. PROVIDE A COMPRESSED AIR OUTLET HIGH IN SPACE AT BOTTOM OF ROOF STRUCTURE FOR HOSE CONNECTION FROM PORTABLE VEHICLE LIFT. PRIOR TO THE START OF ANY COMPRESSED AIR SUPPLY SYSTEM WORK THIS CONTRACTOR IS RESPONSIBLE FOR VERIFICATION OF PIPE ROUTING AND LOCATION OF OUTLET IN THE FIELD WITH THE OWNER.

10. PROVIDE POWER WASHER SEE "POWER WASHER PIPING DIAGRAM" AND "POWER WASHER EQUIPMENT & MATERIALS NOTES" ON DRAWING P-5. COORDINATE FINAL LOCATION OF UNIT IN THE FIELD WITH THE OWNER.

11. SEE DRAWING P-0 FOR GENERAL NOTES, LEGEND AND ABBREVIATIONS.

ISSUED FOR BID JULY 19, 2023
NOT FOR CONSTRUCTION

Revision	Date	Description	Rev By
1	8/9/2023	ADDENDUM 1	

This document, and all information and work product represented by and contained herein, is the sole and exclusive property of McCarthy Engineering Associates, Inc. and is not to be used, reproduced, or disclosed to any other party without the prior written permission of McCarthy Engineering Associates, Inc. This document is not to be used for any purpose not intended by McCarthy Engineering Associates, Inc. or on any other project. This document is not to be altered by any party except McCarthy Engineering Associates, Inc. without the express written consent of McCarthy Engineering Associates, Inc. Any party receiving this document, by its acceptance, agrees to the foregoing restrictions, and to indemnify and hold harmless McCarthy Engineering Associates, Inc. for any damages, including consequential damages, arising out of the unauthorized use of this document.
Copyright, 2023, McCarthy Engineering Associates, Inc. All rights reserved.

McCARTHY
ENGINEERING ASSOCIATES, INC.
www.McCarthy-Engineering.com
2500 East High Street
Suite 630
Pottstown, PA 19464
Phone: 610.313.8001
595 Van Reed Road
Suite 2
Wyomissing, PA 19610

SEAL:

PLUMBING FIRST FLOOR PLAN " PIPING SYSTEMS " PUBLIC WORKS FACILITY

Client: WYOMISSING BOROUGH
Location: WYOMISSING BOROUGH, BERKS COUNTY, PENNSYLVANIA
Date: JULY 19, 2023

DRAWN BY:	PROJ. MANAGER:
EPG	NEC
PRINCIPAL:	SCALE:
JCM	AS NOTED

DRAWING NO.
P-1

PROJECT NO.
230004

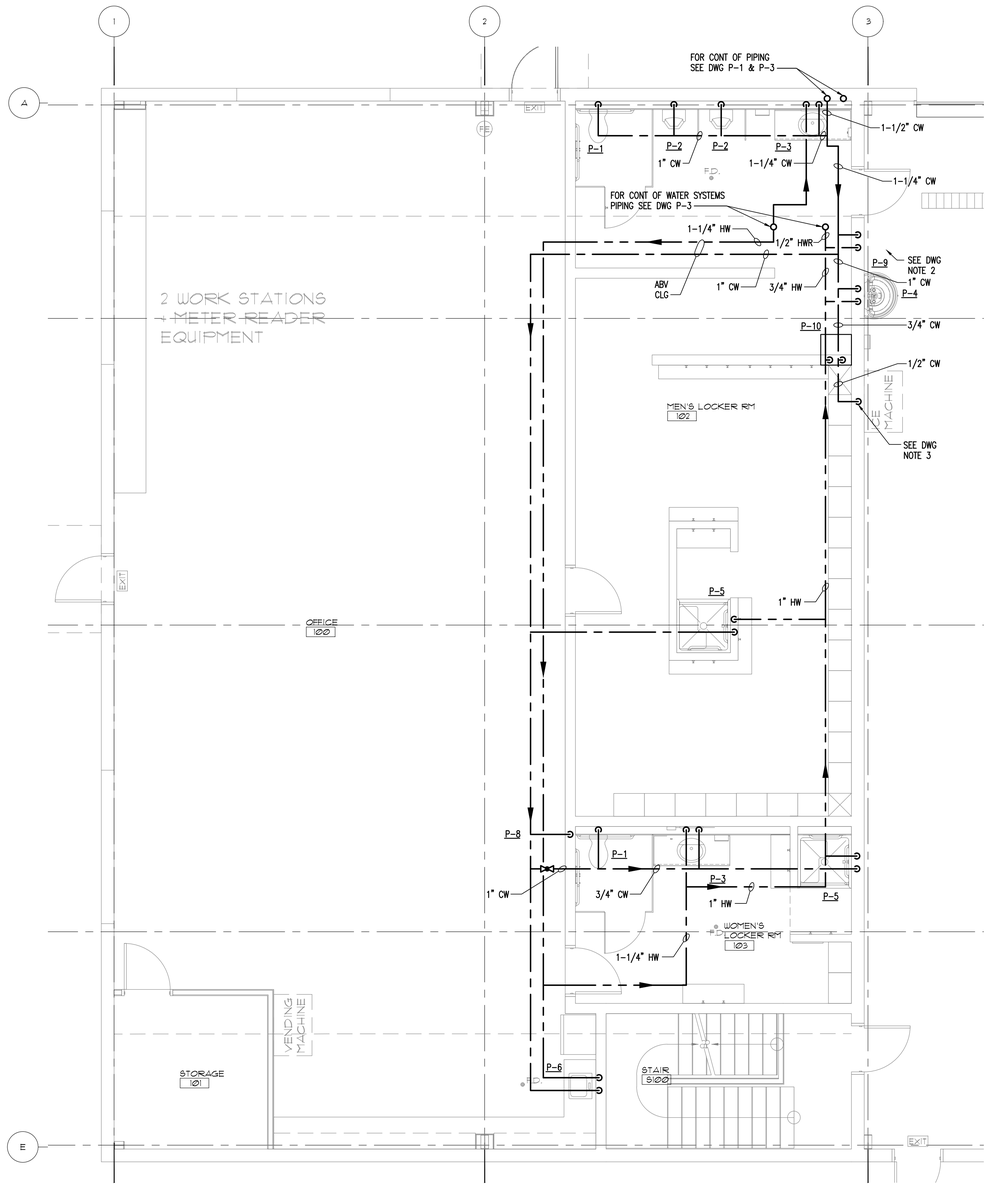

PLUMBING ENLARGED PARTIAL FIRST FLOOR PLAN – WATER SYSTEMS PIPING
SCALE: 1/4" = 1'-0"

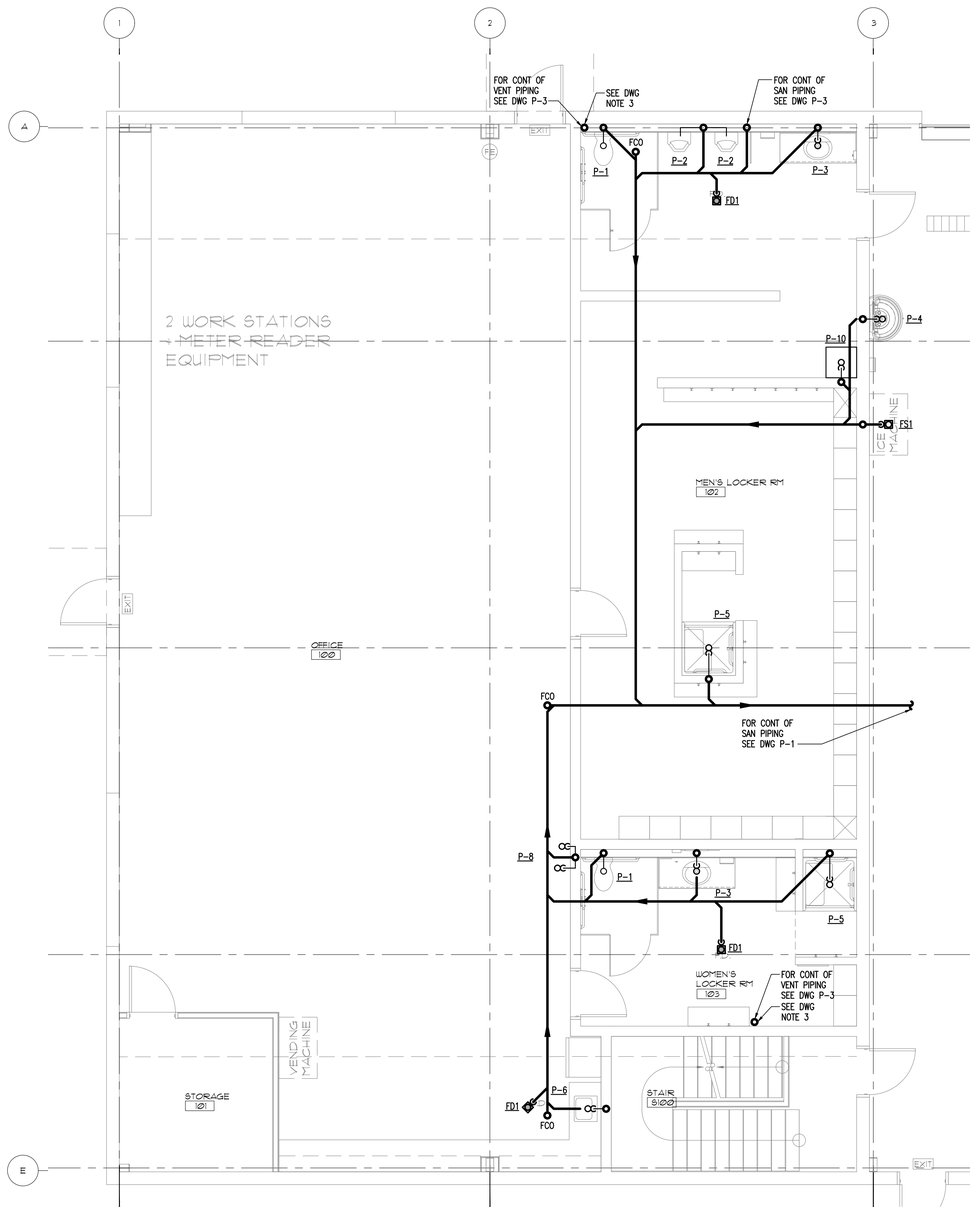

PLUMBING ENLARGED PARTIAL FIRST FLOOR PLAN – DRAINAGE & VENT PIPING
SCALE: 1/4" = 1'-0"

DRAWING NOTES:

1. PROVIDE A WALL BOX WITH 1/2 COLD WATER SUPPLY LINE COMPLETE WITH BALL VALVE, BACKFLOW PREVENTER (WATTS OR EQUAL) AND CONNECT TO INLINE FILTER SYSTEM SUPPLIED WITH OWNER FURNISHED ICE MACHINE. THE PLUMBING CONTRACTOR SHALL INSTALL FILTER SYSTEM IN ACCESSIBLE LOCATION. COORDINATE FINAL LOCATION OF EQUIPMENT, LINE SIZES AND CONNECTION REQUIREMENTS WITH THE OWNERS EQUIPMENT SUPPLIER.
2. EMERGENCY EYEWASH STATION SEE "EMERGENCY STATION DESIGN NOTES" ON DRAWING P-0 AND "EMERGENCY EYEWASH PIPING DIAGRAM" ON DRAWING P-5.
3. ROUTE NEW VENT PIPING AS SHOWN ON SANITARY RISER DIAGRAM AND AS HIGH AS POSSIBLE ABOVE NEW CEILINGS (WHERE APPLICABLE) AND CONNECT TO VENT THROUGH ROOF. PRIOR TO THE START OF ANY VENT SYSTEM WORK THIS CONTRACTOR IS RESPONSIBLE FOR VERIFICATION OF VENT PIPE ROUTING AND VENT TERMINAL LOCATION WITH THE OWNER.
4. SEE DRAWING P-0 FOR GENERAL NOTES, LEGEND AND ABBREVIATIONS.

ISSUED FOR BID JULY 19, 2023
NOT FOR CONSTRUCTION

McCARTHY ENGINEERING ASSOCIATES, INC.
www.McCarthy-Engineering.com
2500 East High Street, Suite 630
Pottstown, PA 19464
Phone: 610.313.8001

Project No.
230004

Revision	Date	Description	Rev By
1	8/9/2023	ADDENDUM 1	

This document, and all information and work product represented by and contained herein, is the sole and exclusive property of McCarthy Engineering Associates, Inc. and is not to be used, published, or disclosed to any person or entity for any purpose whatsoever without the express written permission of McCarthy Engineering Associates, Inc. Any unauthorized use, publication, or disclosure will be considered a violation of the Copyright Act, 17 U.S.C. 101 et seq., and will be subject to all civil and criminal penalties that are provided by law. Unauthorized use of this document may also violate state or local laws including laws prohibiting misappropriation or theft of trade secrets. McCarthy Engineering Associates, Inc. reserves all rights to pursue any and all such violations to the fullest extent of the law.
Copyright, 2023, McCarthy Engineering Associates, Inc. All rights reserved.

McCARTHY ENGINEERING ASSOCIATES, INC.
2500 East High Street, Suite 630, Pottstown, PA 19464
555 Van Reed Road, Suite 2, Wyomissing, PA 19610
www.McCarthy-Engineering.com
Phone: 610.313.8001

SEAL:

PLUMBING ENLARGED PARTIAL FLOOR PLANS PIPING SYSTEMS "PUBLIC WORKS FACILITY"

Client: WYOMISSING BOROUGH
Location: WYOMISSING BOROUGH, BERKS COUNTY, PENNSYLVANIA
Date: JULY 19, 2023

DRAWN BY:	PROJ. MANAGER:
EPG	NEC
PRINCIPAL:	SCALE:
JCM	AS NOTED

DRAWING NO.
P-2

PROJECT NO.
230004

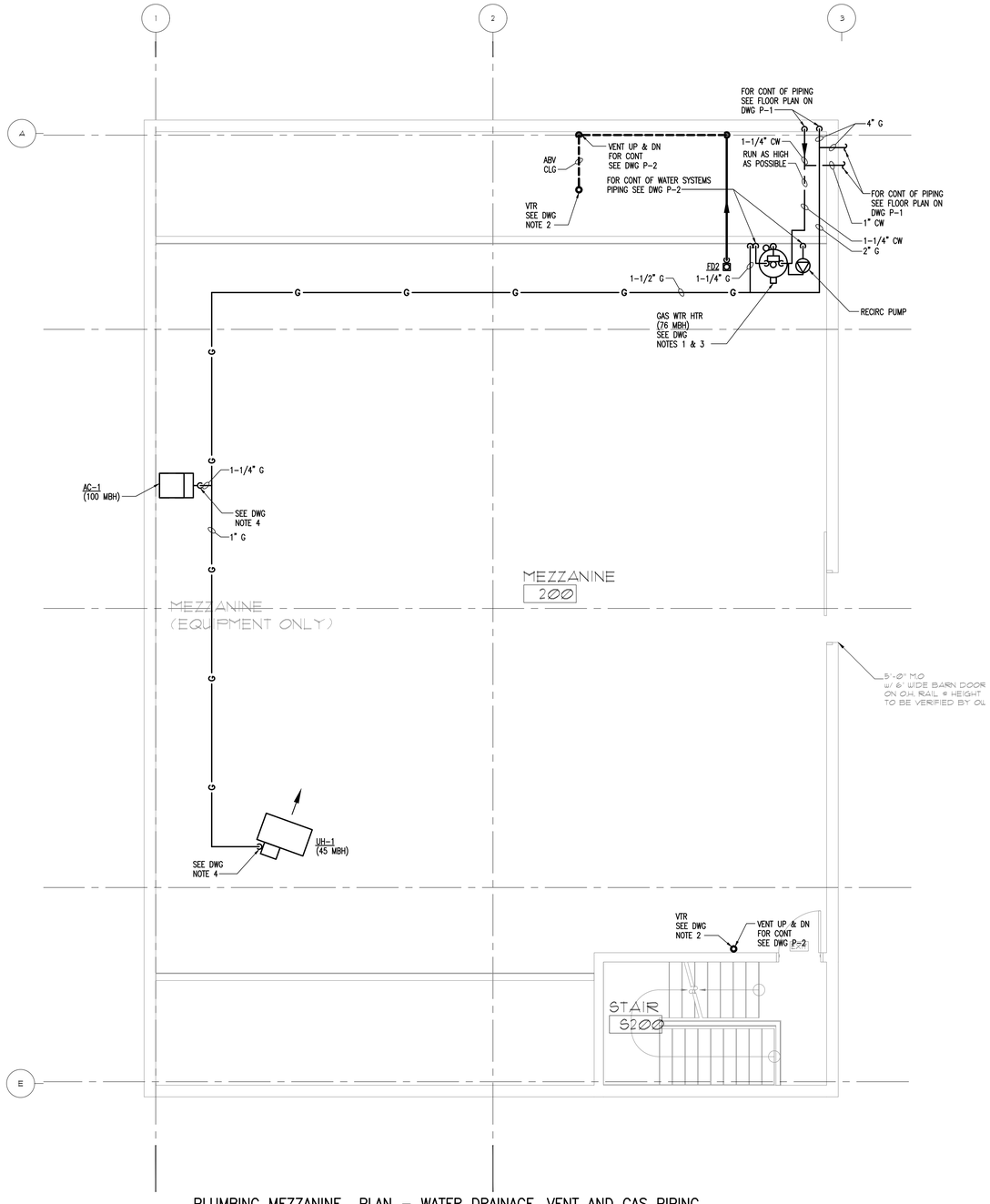

PLUMBING MEZZANINE PLAN – WATER DRAINAGE, VENT AND GAS PIPING

SCALE: 1/4" = 1'-0"

COMPRESSED AIR SYSTEM EQUIPMENT & MATERIALS NOTES:

1. DUE TO THE SMALL SCALE OF THE DRAWING, IT IS NOT POSSIBLE TO INDICATE ALL OFFSETS, FITTINGS AND HANGERS WHICH MAY BE REQUIRED. THE DRAWING IS GENERALLY DIAGRAMMATIC AND INDICATIVE OF THE PIPING SYSTEM WORK. THE CONTRACTOR SHALL CAREFULLY INVESTIGATE THE STRUCTURAL CONDITIONS AFFECTING THE INSTALLATION OF NEW PIPING TO SERVE AREA. PROVIDE ALL WORK ACCORDINGLY, FURNISHING NECESSARY FITTINGS AND HANGERS AS MAY BE REQUIRED TO MEET THE VARIOUS CONDITIONS. THE PLUMBING CONTRACTOR SHALL SUBMIT A PIPING LAYOUT DRAWING SHOWING FINAL PIPE ROUTING, PIPE ELEVATIONS AND ALL PIPE SUPPORTS FOR THE OWNERS REVIEW.

2. BASIS OF DESIGN FOR COMPRESSED AIR SYSTEM IS A TOTAL SUPPLY OF 24 CFM AT 125 PSI FROM SOURCE EQUIPMENT. PIPE SIZING IS BASED ON A MAXIMUM SYSTEM PRESSURE LOSS OF TEN (10) PERCENT IN THE PIPE SYSTEM. ALL COMPRESSED AIR PIPING WITHIN SHALL BE HARD DRAWN TYPE "L" COPPER TUBING IN ACCORDANCE WITH ASTM-B88. FITTINGS SHALL BE WROUGHT COPPER OR CAST BRASS. VALVES SHALL BE CAST BRASS UNLESS NOTED OTHERWISE. HANGERS FOR SUPPORTING COPPER TUBING SHALL BE COPPERIZED. ALL JOINTS SHALL BE MADE WITH SOLDER AND FLUX HAVING LEAD CONTENT OF NOT MORE THAN 0.2 PERCENT.

3. COMPRESSED AIR SOURCE SHALL BE ROTARY SCREW, FIXED SPEED TYPE AIR COMPRESSOR TOTAL AIR SYSTEM COMPLETE WITH COMPRESSOR, COOLER AND DRYER, INTEGRATED CONTROLS, WATER SEPARATORS, DRAIN PORTS, FILTERS AND HORIZONTAL RECEIVER TANK; MODEL RS5.5I TAS, MANUFACTURED BY INGERSOLL RAND.

   AIR COMPRESSOR SHALL BE CAPABLE OF DELIVERING 27.5 CFM AT 125 PSIG. AIR RECEIVER SHALL BE ASME RATED HORIZONTAL TYPE WITH 120 GALLON CAPACITY. COMPRESSOR, COOLER AND DRYER, INTEGRATED CONTROLS, WATER SEPARATORS, FILTERS ETC. TO BE IN ENCLOSURE MOUNTED TO THE TOP OF THE TANK AND SHALL BE COMPLETE WITH ONE AIR PRESSURE GAUGE (0–300 PSIG), ASME SAFETY RELIEF VALVE, AIR DISCHARGE SERVICE VALVE AND DRAIN VALVES.

   COMPRESSOR SHALL BE DRIVEN BY A 7–1/2 HP MOTOR. MOTOR SHALL RUN AT 3315 RPM AND SHALL BE 208V, THREE PHASE, 60 CYCLES.

4. COPPER AND COPPER ALLOY PRESS FITTINGS SHALL CONFORM TO THE MATERIAL REQUIREMENTS OF ASME B16.18, ASME B16.22 AND PERFORMANCE CRITERIA OF IAMPO PS 117. SEALING ELEMENTS FOR PRESS FITTINGS SHALL BE EPDM. SEALING ELEMENTS SHALL BE FACTORY INSTALLED OR AN ALTERNATIVE SUPPLIED BY FITTING MANUFACTURER. PRESS END SHALL HAVE SC (SMART CONNECT) FEATURE DESIGN (LEAKAGE PATH) TO ASSURE LEAKAGE OF LIQUIDS AND/OR GASES FROM INSIDE THE SYSTEM PAST THE SEALING ELEMENT OF A UNPRESSED CONNECTION. THIS FEATURE SHALL PROVIDE THE INSTALLER WITH A QUICK AND EASY IDENTIFICATION OF CONNECTIONS WHICH HAVE NOT BEEN PRESSED PRIOR TO PUTTING THE SYSTEM INTO OPERATION. COPPER PRESS FITTINGS SHALL BE PROPRESS WITH SC FEATURE AS MANUFACTURED BY VIEGA NORTH AMERICA.

   COPPER PRESS FITTING JOINTS SHALL BE MADE IN ACCORDANCE WITH THE MANUFACTURERS INSTALLATION INSTRUCTIONS. THE TUBING SHALL BE FULLY INSERTED INTO THE FITTING AND THE TUBING MARKED AT THE SHOULDER OF THE FITTING. THE FITTING ALIGNMENT SHALL BE CHECKED AGAINST THE MARK ON THE TUBING TO ASSURE THE TUBING IS FULLY ENGAGED (INSERTED) IN THE FITTING. THE JOINTS SHALL BE PRESSED USING THE TOOL APPROVED BY THE MANUFACTURER.

5. PERFORM INSPECTION, TESTING AND CLEANING OF PIPING, FITTINGS, VALVES, OUTLETS, AND ASSOCIATED SOURCE EQUIPMENT. PROVIDE WRITTEN DOCUMENTATION TO ASSURE THE SYSTEM IS IN USEABLE CONDITION FOR INTENDED SERVICE. AFTER THE INSTALLING CONTRACTOR HAS COMPLETED ALL TESTS, A THIRD PARTY SHALL PERFORM SYSTEM VERIFICATION TESTING.

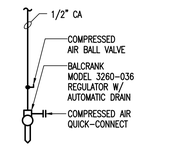

COMPRESSED AIR DROP DIAGRAM

NO SCALE

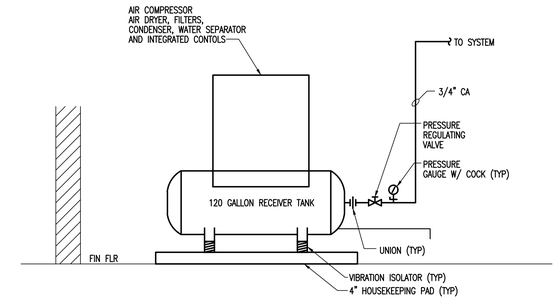

AIR COMPRESSOR PIPING DIAGRAM

NO SCALE

DRAWING NOTES:

1. GAS FIRED AUTOMATIC STORAGE TANK TYPE WATER HEATER, HOT WATER CIRCULATION PUMP AND FLOOR STAND. SEE WATER HEATER PIPING DIAGRAM ON DRAWING P-5. FOR VALVES, EQUIPMENT AND APPURTENANCES IN WATER SYSTEMS PIPING TO WATER HEATER.
2. ROUTE NEW VENT PIPING AS SHOWN ON SANITARY RISER DIAGRAM AND AS HIGH AS POSSIBLE ABOVE NEW CEILINGS (WHERE APPLICABLE) AND CONNECT TO VENT THROUGH ROOF. PRIOR TO THE START OF ANY VENT SYSTEM WORK THIS CONTRACTOR IS RESPONSIBLE FOR VERIFICATION OF VENT PIPE ROUTING AND VENT TERMINAL LOCATION WITH THE OWNER.
3. CONNECT GAS LINE TO WATER HEATER CONNECTION TO BE COMPLETE WITH DIRT LEG, ISOLATION GAS VALVE AND UNION SEE "WATER HEATER PIPING DIAGRAM" ON DRAWING P-5
4. THE PLUMBING CONTRACTOR SHALL CONNECT GAS LINE TO MECHANICAL UNIT, CONNECTION TO BE COMPLETE WITH DIRT LEG, ISOLATION GAS VALVE AND UNION. PRIOR TO THE START OF ANY NEW GAS SUPPLY SYSTEM WORK THIS CONTRACTOR IS RESPONSIBLE FOR VERIFICATION OF PIPE ROUTING AND POINT OF CONNECTION TO UNIT WITH THE MECHANICAL CONTRACTOR.
5. SEE DRAWING P-0 FOR GENERAL NOTES, LEGEND AND ABBREVIATIONS.

ISSUED FOR BID JULY 19, 2023
NOT FOR CONSTRUCTION

McCARTHY ENGINEERING ASSOCIATES, INC.
www.McCarthy-Engineering.com
2500 East High Street, Suite 630
Pottstown, PA 19464
Phone: 610.313.8001

Project No.
230004

Revision	Date	Description	Rev By
1	8/9/2023	ADDENDUM 1	

This document, and all information and work provided, represented by and contained herein, is the sole and exclusive property of McCarthy Engineering Associates, Inc. and is not to be used in any way without the written consent of McCarthy Engineering Associates, Inc. All rights reserved. Copyright, 2023, McCarthy Engineering Associates, Inc.

McCARTHY ENGINEERING ASSOCIATES, INC.
2500 East High Street
Suite 630
Pottstown, PA 19464
www.McCarthy-Engineering.com
Phone: 610.313.8001

595 Van Reed Road
Suite 2
Pilgrimsing, PA 19610

SEAL:

PLUMBING MEZZANINE PLAN
PIPING SYSTEMS
" PUBLIC WORKS FACILITY "

Client: WYOMISSING BOROUGH
Location: WYOMISSING BOROUGH, BERKS COUNTY, PENNSYLVANIA
Date: JULY 19, 2023

DRAWN BY:	PROJ. MANAGER:
EPG	NEC
PRINCIPAL:	SCALE:
JCM	AS NOTED

DRAWING NO.
P-3

PROJECT NO.
230004

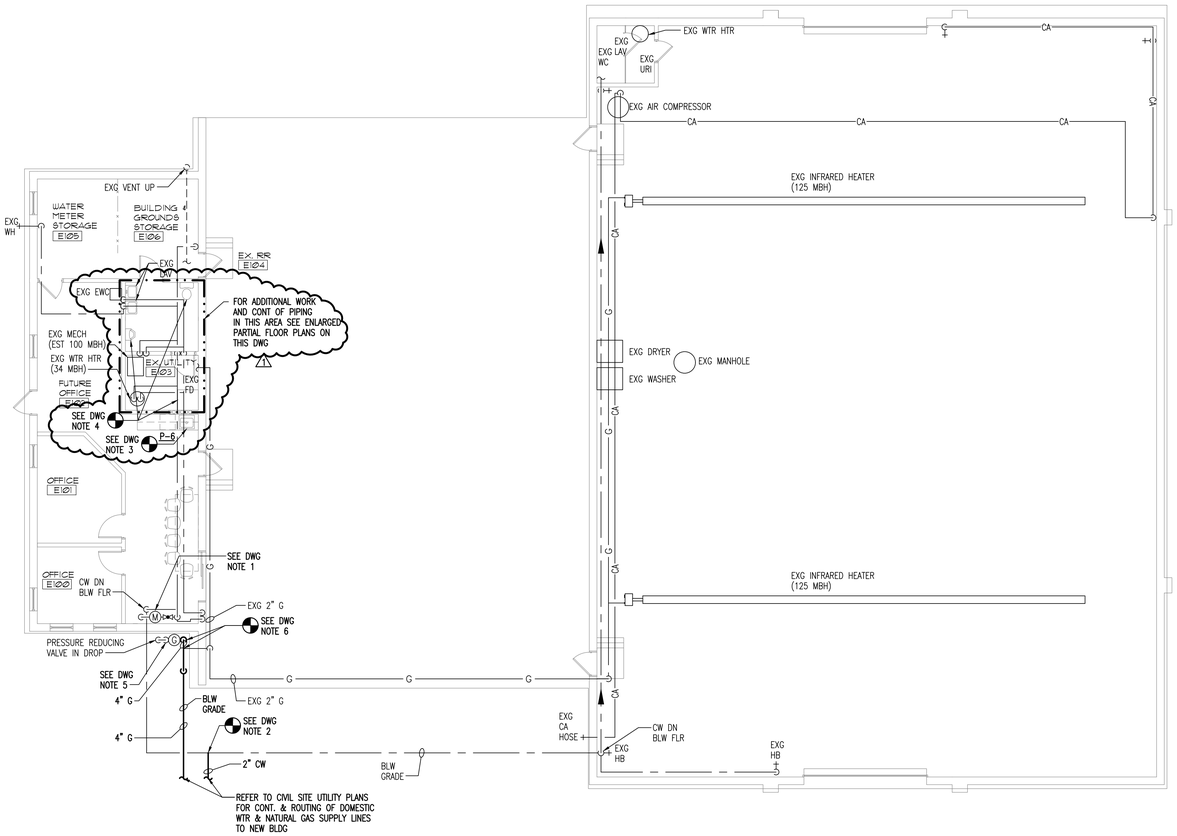

PLUMBING EXISTING BUILDING FLOOR PLAN – NEW WORK

SCALE: 1/8" = 1'-0"

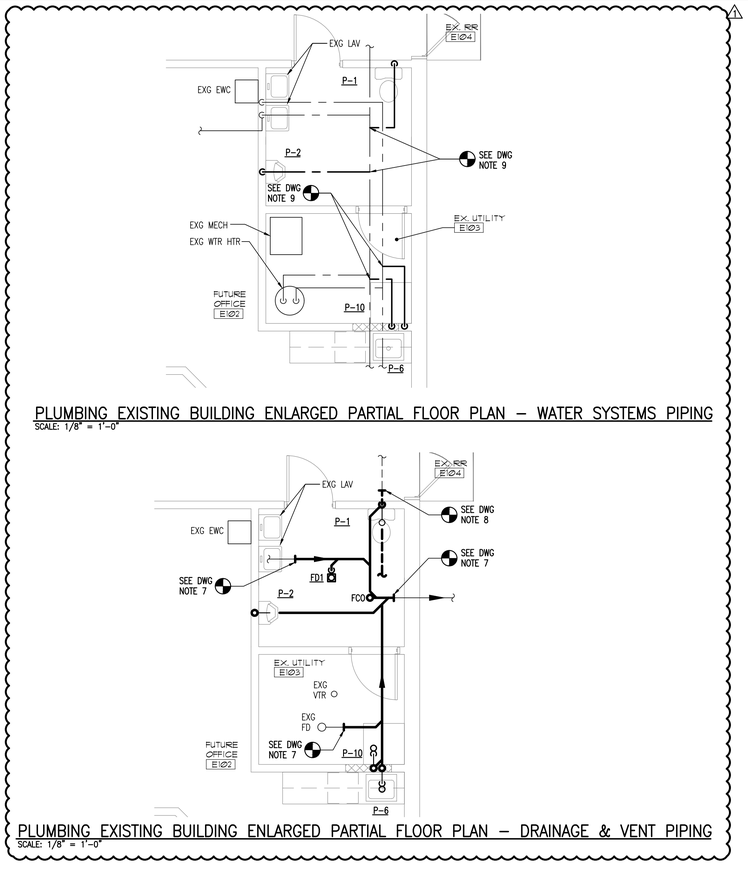

PLUMBING EXISTING BUILDING ENLARGED PARTIAL FLOOR PLAN – WATER SYSTEMS PIPING

SCALE: 1/8" = 1'-0"

PLUMBING EXISTING BUILDING ENLARGED PARTIAL FLOOR PLAN – DRAINAGE & VENT PIPING

SCALE: 1/8" = 1'-0"

DRAWING REMOVAL WORK KEY NOTES:

1. DISCONNECT AND REMOVE MOP SERVICE BASIN AND ASSOCIATED FAUCET ASSEMBLY IN ITS ENTIRETY. REMOVE FIXTURE TRIM AND FIXTURE BRANCH WATER, DRAINAGE AND VENT SYSTEMS PIPING BACK TO LAST ACTIVE BRANCH LINE PIPING AND CAP OR PLUG IN CODE APPROVED MANNER UNLESS OTHERWISE NOTED ON NEW WORK PLAN.
2. DISCONNECT AND REMOVE SHOWER VALVE AND SHOWER HEAD IN ITS ENTIRETY. REMOVE FIXTURE BRANCH WATER PIPING BACK TO LAST ACTIVE BRANCH LINE PIPING AND CAP OR PLUG IN CODE APPROVED MANNER UNLESS OTHERWISE NOTED ON NEW WORK PLAN.
3. DISCONNECT AND REMOVE SHOWER DRAIN. REMOVE DRAIN TRAP ASSEMBLY AND BRANCH PIPING BACK TO LAST ACTIVE BRANCH LINE PIPING AND CAP OR PLUG IN CODE APPROVED MANNER UNLESS OTHERWISE NOTED ON NEW WORK PLAN.
4. DISCONNECT AND REMOVE FLOOR DRAIN. REMOVE DRAIN TRAP ASSEMBLY AND BRANCH PIPING BACK TO LAST ACTIVE BRANCH LINE PIPING AND CAP OR PLUG IN CODE APPROVED MANNER UNLESS OTHERWISE NOTED ON NEW WORK PLAN.
5. DISCONNECT AND REMOVE FLOOR MOUNT FLUSH TANK WATER CLOSET. REMOVE TRIM AND ASSOCIATED BRANCH PIPING BACK TO LAST ACTIVE BRANCH LINE PIPING AND CAP OR PLUG IN CODE APPROVED MANNER UNLESS OTHERWISE NOTED ON NEW WORK PLAN.
6. DISCONNECT AND REMOVE WALL MOUNT URINAL AND ASSOCIATED FLUSHOMETER VALVE. REMOVE TRIM AND ASSOCIATED BRANCH PIPING BACK TO LAST ACTIVE BRANCH LINE PIPING AND CAP OR PLUG IN CODE APPROVED MANNER UNLESS OTHERWISE NOTED ON NEW WORK PLAN.

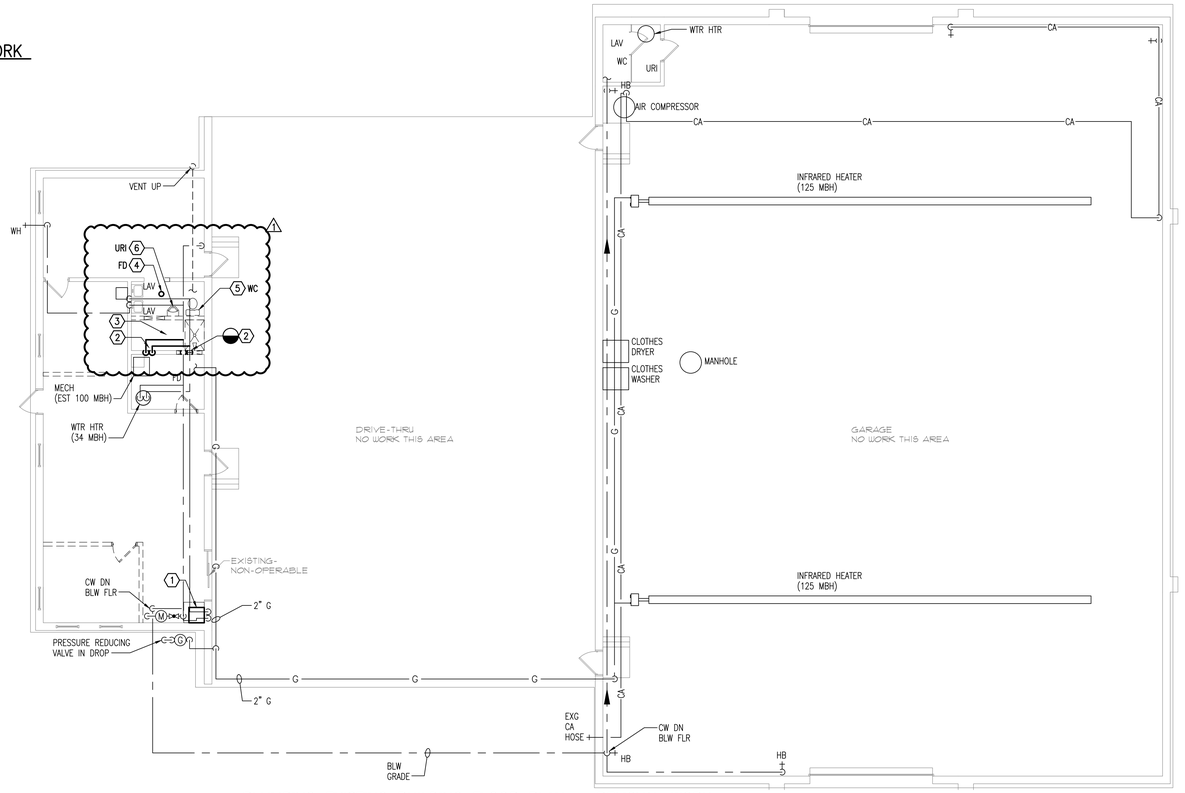

PLUMBING EXISTING BUILDING FLOOR PLAN – REMOVAL WORK

SCALE: 1/8" = 1'-0"

DRAWING NOTES:

1. THE INTENT IS FOR EXISTING BUILDING DOMESTIC WATER SUPPLY LINE AND SERVICE ENTRANCE EQUIPMENT TO REMAIN AND SERVE BOTH THE EXISTING AND NEW BUILDINGS. THE PLUMBING CONTRACTOR IS RESPONSIBLE FOR COORDINATING WITH THE WATER SUPPLIER AND PROVIDING ANY METER OR SERVICE ENTRANCE EQUIPMENT UPGRADES.

   WATER SERVICE DEMAND ESTIMATE IS AS FOLLOWS:
   NEW BUILDING
   44 WATER SUPPLY FIXTURE UNITS (WSFU) OR 30 GALLONS PER MINUTE (GPM).

   EXISTING BUILDING
   41 WATER SUPPLY FIXTURE UNITS (WSFU) OR 27 GALLONS PER MINUTE (GPM).

   TOTAL WATER SERVICE DEMAND ESTIMATE 85 WATER SUPPLY FIXTURE UNITS (WSFU) OR 40 GALLONS PER MINUTE (GPM).
2. PROVIDE NEW BUILDING WATER SUPPLY LINE AND CONNECT TO EXISTING WATER LINE IN GENERAL AREA AS SHOWN. THE EXISTING UNDERGROUND WATER SUPPLY PIPE ROUTING HAS NOT BEEN VERIFIED. PRIOR TO THE START OF ANY NEW WATER SUPPLY SYSTEM WORK THIS CONTRACTOR IS RESPONSIBLE FOR VERIFICATION OF TIE-IN POINT AND PIPE ROUTING WITH CIVIL SITE UTILITIES DRAWINGS.
3. PROVIDE SINK AND FIXTURE BRANCH WATER, DRAIN AND VENT PIPING AS SHOWN AND REQUIRED TO CONNECT FIXTURE TO EXISTING PLUMBING SYSTEMS PIPING IN THIS GENERAL AREA.
4. PROVIDE FIXTURE BRANCH WATER, DRAIN AND VENT PIPING AS SHOWN AND REQUIRED TO CONNECT FIXTURE TO EXISTING PLUMBING SYSTEMS PIPING IN THIS GENERAL AREA.
5. THE INTENT IS FOR EXISTING BUILDING GAS SUPPLY LINE AND SERVICE ENTRANCE EQUIPMENT TO REMAIN AND SERVE BOTH THE EXISTING AND NEW BUILDINGS. THE PLUMBING CONTRACTOR IS RESPONSIBLE FOR COORDINATING WITH THE GAS SUPPLIER ANY METER OR SERVICE ENTRANCE EQUIPMENT UPGRADES. FOR LOAD ESTIMATE INFORMATION SEE "GAS METER MANIFOLD PIPING DIAGRAM" ON DRAWING P-5.
6. PROVIDE BUILDING GAS SUPPLY MANIFOLD PIPING MODIFICATIONS AND EXTENSION OF EXISTING GAS SERVICE SERVING THE EXISTING BUILDING AS SHOWN. SEE "GAS METER MANIFOLD PIPING DIAGRAM" ON DRAWING P-5. REFER TO CIVIL SITE UTILITY PLANS FOR ROUTING OF EXTERIOR PIPING. PRIOR TO THE START OF ANY NEW GAS SUPPLY SYSTEM WORK THIS CONTRACTOR IS RESPONSIBLE FOR VERIFICATION OF PIPE ROUTING WITH CIVIL SITE UTILITIES DRAWINGS.
7. CONNECT NEW SANITARY DRAINAGE PIPING AS SHOWN TO THE EXISTING BELOW FLOOR SANITARY BUILDING DRAIN PIPING. THE UNDER FLOOR SANITARY DRAINAGE PIPING HAS NOT BE VERIFIED. PRIOR TO THE START OF ANY NEW SANITARY DRAINAGE SYSTEM WORK THIS CONTRACTOR IS RESPONSIBLE FOR FIELD INVESTIGATION AND VERIFICATION OF DRAIN LINE SIZE AND INVERT ELEVATIONS AT NEW TIE-IN POINTS PROMPTLY REPORT ANY PROBLEMS WITH TIE-IN CONNECTIONS TO THE ARCHITECT.
8. CONNECT NEW VENT PIPING TO EXISTING VENT MAIN PIPING IN THIS GENERAL AREA. THIS CONTRACTOR IS RESPONSIBLE FOR FIELD INVESTIGATION OF TIE-IN POINT AND VERIFICATION OF ROUTING OR ELEVATIONS AT NEW TIE-IN POINTS. PROMPTLY REPORT ANY PROBLEMS WITH TIE-IN CONNECTION TO THE ARCHITECT.
9. CONNECT NEW WATER SYSTEMS PIPING AS SHOWN TO THE EXISTING ABOVE THE CEILING WATER SYSTEM MAINS.. THE ABOVE CEILING WATER SYSTEMS PIPING HAS NOT BE VERIFIED. PRIOR TO THE START OF ANY NEW WATER SYSTEMS PIPING WORK THIS CONTRACTOR IS RESPONSIBLE FOR FIELD INVESTIGATION AND VERIFICATION OF LINE SIZES AND NEW TIE-IN POINTS, PROMPTLY REPORT ANY PROBLEMS WITH TIE-IN CONNECTIONS TO THE ARCHITECT.
10. SEE DRAWING P-0 FOR GENERAL NOTES, LEGEND AND ABBREVIATIONS.

ISSUED FOR BID JULY 19, 2023
NOT FOR CONSTRUCTION

McCARTHY ENGINEERING ASSOCIATES, INC.
www.McCarthy-Engineering.com
2500 East High Street, Suite 630
Pottstown, PA 19464
Phone: 610.313.8001

Project No.
230004

Revision	Date	Description	Rev By
1	8/9/2023	ADDENDUM 1	

This document, and all information and work product represented by and contained herein, is the sole and exclusive property of McCarthy Engineering Associates, Inc. and shall not be used, published, or disclosed to any person or entity not employed by the recipient, and for current purposes of which it is intended, directly or indirectly, in whole or in part, without the express written consent of McCarthy Engineering Associates, Inc. All rights reserved.
Copyright, 2023, McCarthy Engineering Associates, Inc.

McCARTHY ENGINEERING ASSOCIATES, INC.
2500 East High Street, Suite 630
Pottstown, PA 19464
www.McCarthy-Engineering.com
Phone: 610.313.8001
255 Van Reed Road, Suite 2, Pilgrimsberg, PA 19610

SEAL:

PLUMBING EXISTING BLDG PLANS & PIPING SYSTEMS " PUBLIC WORKS FACILITY "

Client: WYOMISSING BOROUGH
Location: WYOMISSING BOROUGH, BERKS COUNTY, PENNSYLVANIA
Date: JULY 19, 2023

DRAWN BY:	PROJ. MANAGER:
EPG	NEC
PRINCIPAL:	SCALE:
JCM	AS NOTED

DRAWING NO.
P-4

PROJECT NO.
230004

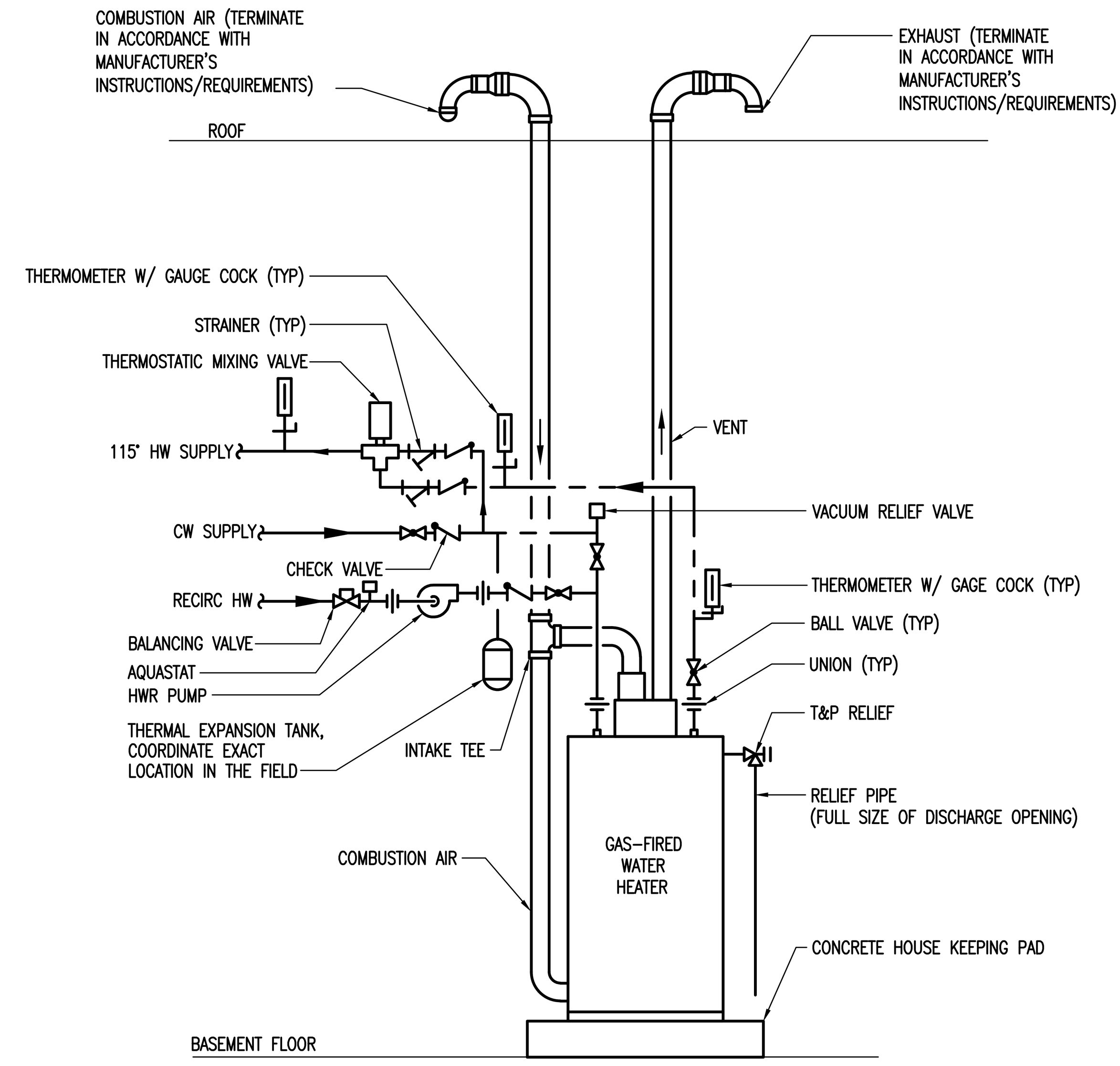

NOTES:
1. COORDINATE FINAL ROUTING OF VENTING IN THE FIELD.
2. VENT PIPING CONNECTOR LENGTHS SHALL NOT EXCEED THE MAXIMUM NUMBER OF FEET STRAIGHT PIPE (INTAKE & EXHAUST), CORRESPONDING TO TOTAL NUMBER OF ELBOWS (INTAKE & EXHAUST) INSTALLED, PER THE MANUFACTURER'S INSTALLATION INSTRUCTIONS.
3. THE 90° TERMINAL ELBOWS, SUPPLIED WITH THE HEATER, MUST BE INSTALLED AT THE EXTREME ENDS OF INTAKE AND EXHAUST VENTING OUTSIDE THE BUILDING. THE END TERMINAL WITH EXTERIOR SCREEN, SUPPLIED WITH THE WATER HEATER, MUST BE INSTALLED ON THE INTAKE VENT.
4. PROVIDE MANUFACTURER'S CONDENSATE TRAP KIT AND DISCHARGE TO FUNNEL/FLOOR DRAIN.

WATER HEATER PIPING DIAGRAM
NO SCALE

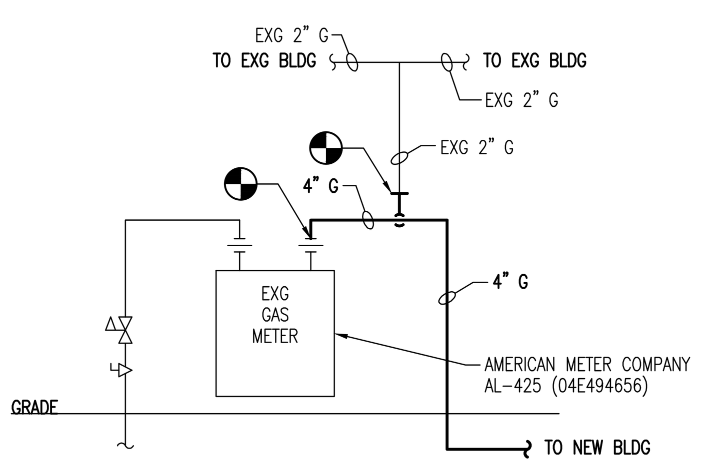

GAS METER MANIFOLD PIPING DIAGRAM
NO SCALE

THIS CONTRACTOR IS RESPONSIBLE FOR COORDINATION OF NATURAL GAS SERVICE METER UPGRADE WITH THE GAS UTILITY COMPANY (UGI 353812).
VERIFY ALL SERVICE REQUIREMENTS AND SERVICE EQUIPMENT WITH THE GAS SUPPLIER AND OWNER PRIOR TO START OF ANY WORK.
GAS LOADS ESTIMATE BREAKDOWN IS AS FOLLOWS:

EXISTING BUILDING..384 MBH
NEW BUILDING...1,546 MBH
TOTAL...1,930 MBH

7 INCH WC IS REQUIRED AT EACH PIECE OF EQUIPMENT.
NEW BUILDING PIPE SIZING IS BASED ON 2018 INTERNATIONAL FUEL GAS CODE TABLE 402.4(1), 400 EQUIVALENT FEET LENGTH OF PIPE FOR INLET PRESSURE UNDER TWO POUNDS AT 0.3 INCH WATER COLUMN PRESSURE DROP, AND GAS WITH 0.60 SPECIFIC GRAVITY.

GAS WATER HEATER SCHEDULE

REF NO	MANUFACTURER/ MODEL NO	MODEL NO	TANK CAPACITY GALLON	GAS MBH INPUT	TEMP RISE DEGREES F	GALLON PER HOUR RECOVERY	VENT PIPE	ELECTRICAL VOLTS	ELECTRICAL PHASE	ELECTRICAL HERTZ	REMARKS
WTR HTR	BRADFORD WHITE	LC2PDV50H765N	48	76	100	81	3 IN	120	1	60	SEE NOTES

NOTE:
1. FACTORY INSTALLED TEMPERATURE AND PRESSURE RELIEF VALVE.
2. COORDINATE WATER HEATER VENT CONFIGURATION AND SIZING WITH EXISTING FIELD CONDITIONS ENCOUNTERED AND INSTALL IN ACCORDANCE WITH MANUFACTURERS INSTALLATION INSTRUCTIONS.
3. 5-YEAR WARRANTY

PLUMBING PUMP SCHEDULE

REF NO	MANUFACTURER/ MODEL NO	SYSTEM SERVED	FLOW (GPM)	TDH FEET	MOTOR (WATT)	MOTOR (RPM)	ELECTRICAL CHARACTERISTICS VOLTS	ELECTRICAL CHARACTERISTICS PHASE	ELECTRICAL CHARACTERISTICS HERTZ	REMARKS
PP-1	BELL & GOSSETT / NBF-10	WATER HEATER	1	15	52	2800	115	1	60	SEE NOTE 1

NOTES: 1. PROVIDE AQUASTAT AND SEVEN DAY TIME CLOCK.

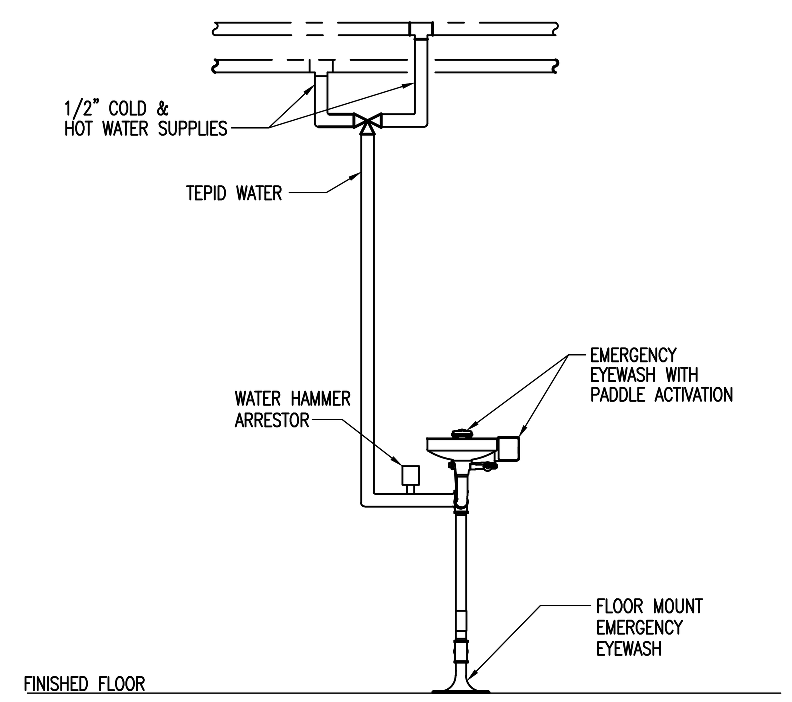

EMERGENCY EYEWASH PIPING DIAGRAM
NO SCALE

POWER WASHER EQUIPMENT & MATERIALS NOTES:

1. THE POWER WASHER SHALL BE A STATIONARY ASSEMBLY (MACHINE DIMENSIONS L 51" X W 31" X H 54") WITH CAPACITY TO DELIVER A FLOW OF 6.0 GALLON PER MINUTE/360 GALLONS PER HOUR AT 3000 PSI FOR HEAVY DUTY CLEANING CAPABILITY. ELECTRIC-POWERED 208V/3PHASE WASHER (TOTAL MACHINE AMPERAGE OF 41 AMPS) WITH NATURAL GAS TO FIRE THE BURNER. UNIT SHALL HAVE GAS INPUT OF 558,050 BTU/HR AND BE EQUIPED WITH A GAS PRESSURE REGULATOR VALVE TO PROVIDE OPERATING GAS MANIFOLD PRESSURE OF 3.5 INCH WATER COLUMN AND MINIMUM GAS INPUT OF 6 INCH WATER COLUMN. ASSEMBLY SHALL INCLUDE A STAINLESS-STEEL COIL, TEN (10) INCH DRAFT DIVERTER AND TEN (10) INCH EXHAUST STACK. UNIT CONTROLS TO FEATURE PROGRAMMABLE SMART CONTROL AUTOMATION TO ALLOW AUTO START/STOP AND SHUT DOWN CAPABILITY. THE 15 HP MOTOR SHALL BE PROTECTED BY REMOVABLE PANELS FOR EASY SERVICING ACCESS AND POWERED BY A HIGHLY EFFICIENT TRIPLEX BELT DRIVE PUMP AND INCLUDE 50' HOSE WITH, WAND AND HIGH-PRESSURE NOZZLE. ASSEMBLY SHALL CARRY A 7-YEAR LIMITED WARRANTY AND BE ETL CERTIFIED FOR SAFETY; MODEL 1832SS-208, MANUFACTURED BY HOTSY'S. SUBMIT INSTALLATION DRAWINGS, MATERIAL LIST AND INSTALLATION AND MAINTENANCE MANUAL.

2. PROVIDE EXHAUST VENT SYSTEM FOR POWER WASHER. EXHAUST VENT SYSTEM SHALL CONFORM TO THE REQUIREMENTS OF NFPA 54 AND NFPA 211, AND COMPLY WITH UL 1738, ULC S636 STANDARD FOR VENTING SYSTEMS FOR CATEGORY II, III, AND IV GAS-BURNING APPLIANCES, AND ALSO APPROVED FOR USE WITH TYPE L VENTING SYSTEMS (GAS OR OIL) IN ACCORDANCE WITH UL 641. ALL FLUE-GAS CARRYING COMPONENTS OF THE VENT SYSTEM SHALL BE OBTAINED THROUGH ONE SOURCE. THE VENT SYSTEM SHALL BE FACTORY-BUILT STAINLESS STEEL SPECIAL GAS TYPE, DOUBLE WALL, ENGINEERED AND DESIGNED FOR USE AS SPECIFIED BY THE EQUIPMENT MANUFACTURER. THE JOINT CLOSURE SYSTEM SHALL BE AN INNER WALL MECHANICAL LOCKING STRAP DESIGN. JOINTS SHALL NOT USE SCREWS OR FASTENERS THAT PENETRATE THE INNER CONDUIT. VENT SHALL BE CONSTRUCTED WITH A FACTORY INSTALLED GASKET USED TO SEAL THE JOINT. USE OF GASKET LUBE, AVAILABLE FROM THE FACTORY, SHOULD BE USED FOR MAXIMIZING GASKET LIFE AND EASE OF INSTALLATION. INNER WALL JOINTS SHALL BE DESIGNED WITH A MALE AND FEMALE OVERLAPPING METAL-METAL CONNECTION TO MAINTAIN CONDENSATE ON THE AL29-4C STAINLESS STEEL. PROPER 1/4 INCH PER FOOT PITCH MUST ALWAYS BE MAINTAINED AND CONDENSATE SHOULD FLOW BACK TOWARD THE APPLIANCE TO THE REQUIRED NUMBER OF DRAINS. THE OUTER WALL CASING SHALL BE CONSTRUCTED OF 430 STAINLESS STEEL THAT SHALL NOT REQUIRE ADDITIONAL SURFACE PREPARATION, SUCH AS PAINTING, TO WITHSTAND THE OUTDOORS OR HIGH HUMIDITY ENVIRONMENTS. INNER CONDUIT AND OUTER WALL CASING SHALL BE CONSTRUCTED WITH A ONE-INCH AIR SPACE BETWEEN THEM AND IN SUCH A FASHION THAT PREVENTS CROSS-ALLOY CONTAMINATION. TEES AND ELBOWS SHALL PROVIDE A PRESSURE DROP LESS THAN 15 FEET EQUIVALENT HORIZONTAL VENT. FITTINGS THAT INCREASE OR DECREASE VENT DIAMETER SHALL BE ASYMMETRIC IN CONSTRUCTION WITH A FLAT WALL THAT MAINTAINS A STRAIGHT LINE WITH ADJOINING PARTS IN ORDER TO FACILITATE THE UNOBSTRUCTED FLOW OF ALL CONDENSATE. ALL PARTS SHALL BE COMPATIBLE WITH OTHER SINGLE WALL AND DOUBLE WALL PRODUCTS OF THE SAME MANUFACTURER. GENERAL ELECTRIC RTV106 (AKA MOMENTIVE) OR DOW CORNING 736 HIGH TEMPERATURE SEALANT SHALL BE USED TO SEAL ALL JOINTS ON SYSTEMS WHERE THE MAXIMUM FLUE GAS TEMPERATURE WILL NOT EXCEED 550°F. A FACTORY INSTALLED 550°F COMPATIBLE SILICONE RUBBER GASKET SHALL BE USED TO SEAL JOINTS. SYSTEM IS TO BE SIZED IN ACCORDANCE WITH THE APPLIANCE MANUFACTURER'S SPECIFICATIONS, NFPA 54-NATIONAL FUEL GAS CODE (ANSI Z223.1), ASHRAE RECOMMENDATIONS, AND OTHER APPLICABLE CODES. ALL COMPONENTS SHALL BE INSTALLED IN STRICT COMPLIANCE WITH THE MANUFACTURER'S INSTRUCTIONS AND ALL PERTINENT LOCAL, REGIONAL, NATIONAL, AND INTERNATIONAL BUILDING AND MECHANICAL CODES AND REGULATIONS. AVAILABLE MANUFACTURER SUBJECT TO COMPLIANCE WITH REQUIREMENTS, PROVIDE PRODUCTS BY ONE OF THE FOLLOWING: HEATFAB SAF-T VENT CI PLUS, METAL-FAB SELKIRK METALBESTOS OR EQUAL. VENT SYSTEM SHALL BE WARRANTED BY THE MANUFACTURER AGAINST DEFECTS IN MATERIAL AND WORKMANSHIP FOR A PERIOD OF FIFTEEN (15) YEARS FROM THE DATE OF MANUFACTURE. SUBMIT INSTALLATION DRAWINGS, MATERIAL LIST AND INSTALLATION MANUAL.

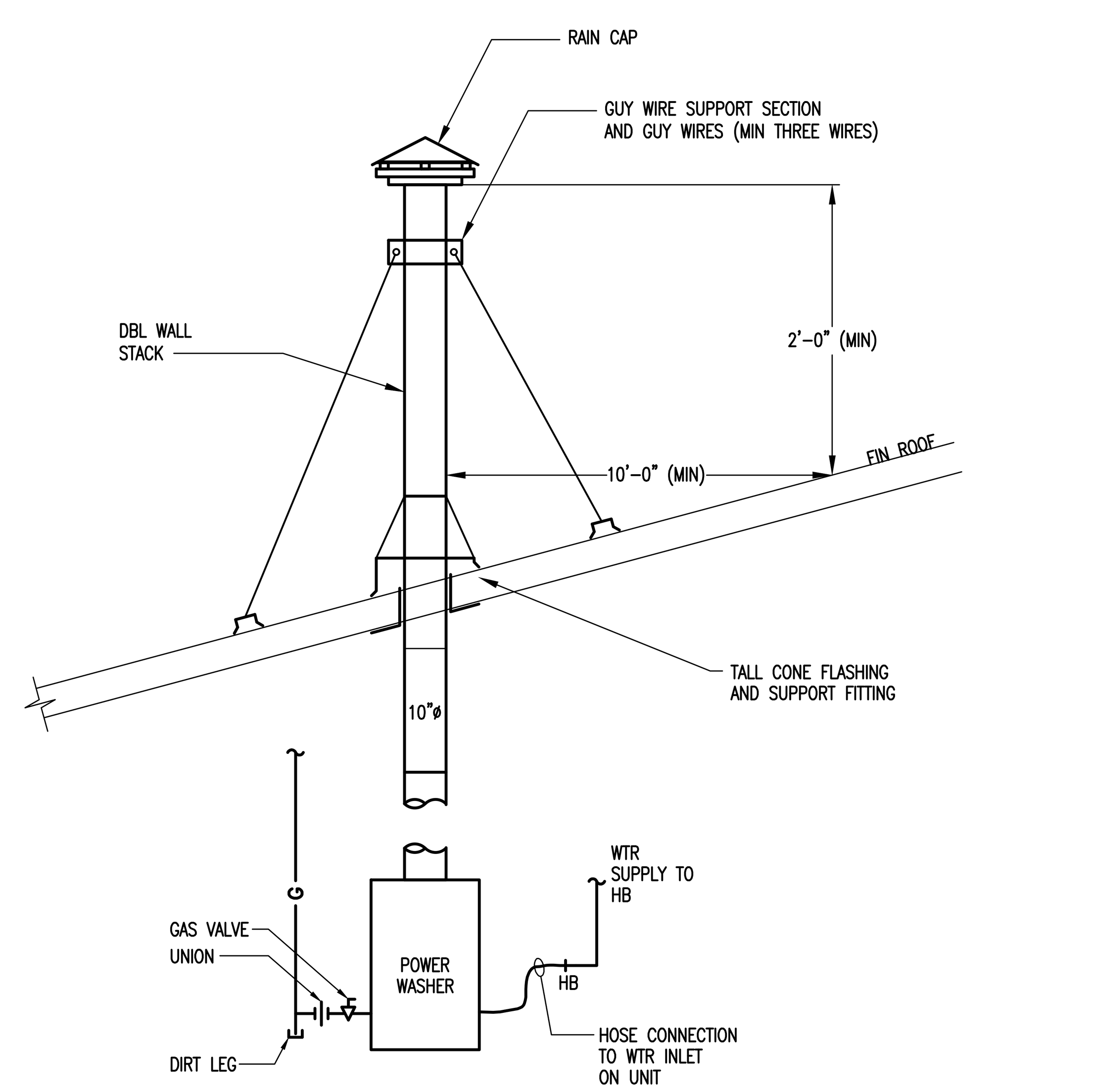

VIDE STAINLESS STEEL DOUBLE WALL INSULATED VENT PIPE AND ACCESSORIES, MODEL SAF-T-CI PLUS AS MANUFACTURED BY HEAT-FAB, INC. CESSORIES SHALL INCLUDE BUT NOT BE LIMITED TO THE FOLLOWING: HEATER ADAPTOR, INSULATED DOUBLE WALL PIPE (ONE INCH INSULATION) UBLE WALL ELBOW FITTINGS, STAINLESS STEEL TALL CONE- FLASHING AND STAINLESS SUPPORT FITTING, STAINLESS GUY WIRE SUPPORT SECTION AND INLESS GUY WIRES AND RAIN CAP, ALL IN ACCORDANCE WITH THE MANUFACTURERS INSTALLATION INSTRUCTIONS, PROVIDE MANUFACTURERS LAYOUT WINGS PRIOR TO INSTALLATION.

' OF THE ROOF CAP SHALL BE (2) TWO FEET HIGHER THAN TOP OF ADJACENT ROOFTOP SLOPE 2. COORDINATE WITH THE MECHANICAL NTRACTOR.

McCARTHY ENGINEERING ASSOCIATES, INC.
www.McCarthy-Engineering.com
2500 East High Street, Suite 630
Pottstown, PA 19464
Phone: 610.373.8001

Project No.
230004

Revision	Date	Description	Rev.By
1	8/9/2023	ADDENDUM 1	

This document and all information and work product represented by and contained herein, is the sole and exclusive property of McCarthy Engineering Associates, Inc. The information contained herein is licensed only for limited use by the intended recipient, and no license, permission or authority is extended, directly or implied, to any party without the express written permission of McCarthy Engineering Associates, Inc.
Copyright, 2017, McCarthy Engineering Associates, Inc. All rights reserved

555 Van Reed Road
Suite 2
Wyomissing, PA 19610
McCARTHY ENGINEERING ASSOCIATES, INC.
www.McCarthy-Engineering.com
Phone: 610.373.8001
2500 East High Street
Suite 630
Pottstown, PA 19464

SEAL:

PLUMBING
DIAGRAMS & SCHEDULES
"PUBLIC WORKS FACILITY"

Client: WYOMISSING BOROUGH
Location: WYOMISSING BOROUGH, BERKS COUNTY, PENNSYLVANIA
Date: JULY 19, 2023

DRAWN BY:	PROJ. MANAGER:
EPG	NEC
PRINCIPAL:	SCALE:
JCM	AS NOTED

DRAWING NO.
P-5
PROJECT NO.
230004

ISSUED FOR BID JULY 19, 2023
NOT FOR CONSTRUCTION

McCARTHY
ENGINEERING ASSOCIATES, INC.
www.McCarthy-Engineering.com
2500 East High Street, Suite 630
Pottstown, PA 19464
Phone: 610.313.8001

Project No.
230004

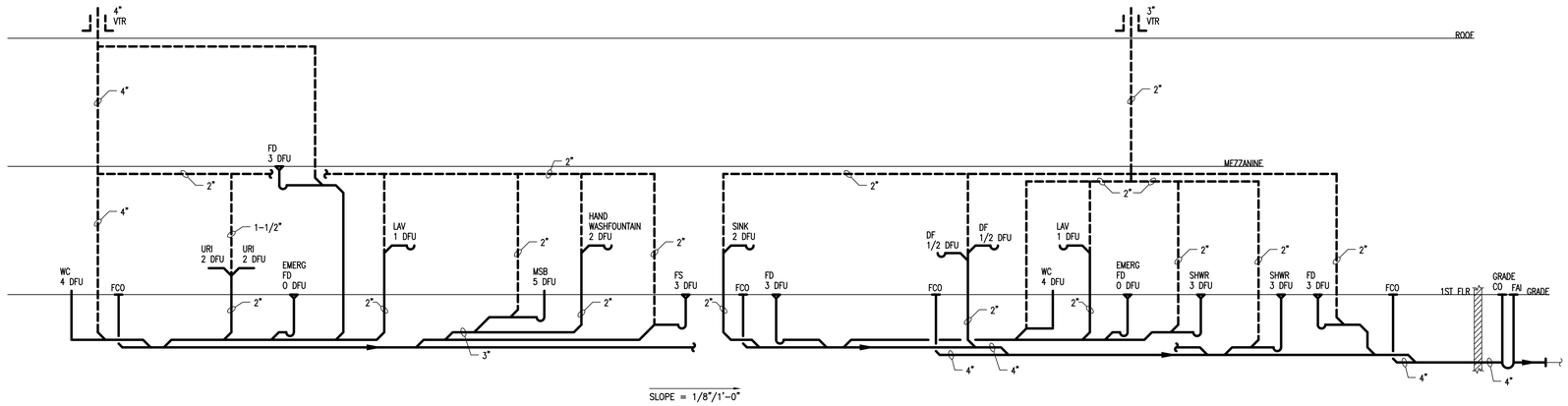

SLOPE = 1/8"/1'-0"

SANITARY RISER DIAGRAM
NO SCALE

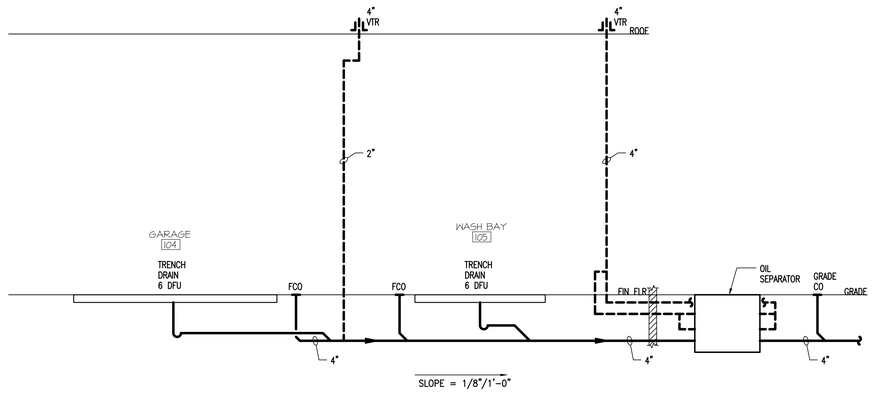

SLOPE = 1/8"/1'-0"

OIL SEPARATOR RISER DIAGRAM
NO SCALE

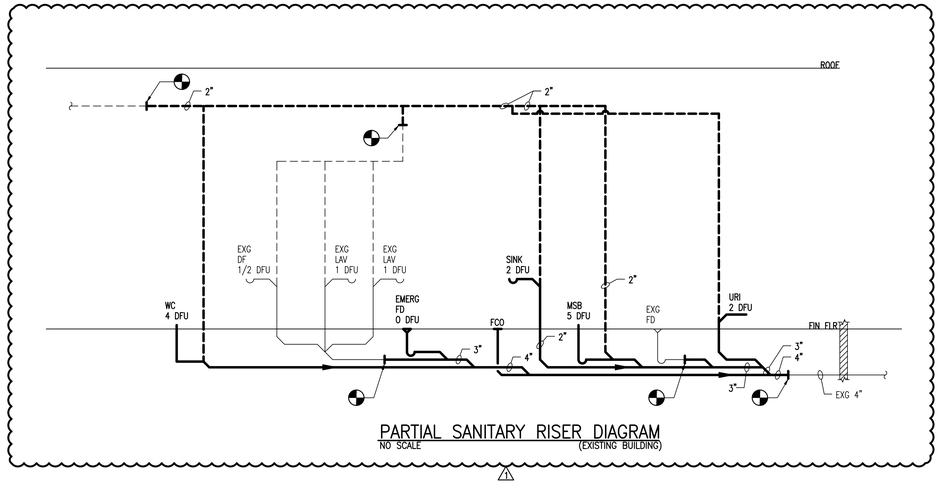

PARTIAL SANITARY RISER DIAGRAM
NO SCALE (EXISTING BUILDING)

1

GENERAL SANITARY RISER NOTES:

1. ALL SANITARY PIPING LESS THAN 3"ø SHALL BE SLOPED AT 1/4"/1'-0". ALL SANITARY PIPING LARGER THAN 3"ø OR LARGER SHALL BE AT 1/8"/1'-0" (IN ACCORDANCE WITH THE PLUMBING CODE AND ALL LOCAL REQUIREMENTS).
2. ALL SANITARY PIPING LOCATED BELOW THE FLOOR SLAB SHALL BE NO LESS THAN 2"ø.
3. ALL VENT THROUGH THE ROOF PENETRATIONS (VTR'S) SHALL BE LOCATED NO LESS THEN 30'-0" FROM ALL EXISTING OR NEW OUTSIDE AIR INTAKES. COORDINATE WITH MECHANICAL CONTRACTOR IN THE FIELD.
4. VERIFY REQUIREMENTS FOR INSTALLATION OF SANITARY BUILDING TRAP AND FRESH AIR INTAKE WITH THE LOCAL AUTHORITY HAVING JURISDICTION.

OIL SEPARATOR DESIGN – EQUIPMENT NOTES:

1. BASIS OF DESIGN FOR SIZING OF OIL INTERCEPTOR – (6) SIX CUBIC FEET OF VOLUME FOR FIRST 100 SQUARE FEET OF SERVICE FLOOR AREA TO BE DRAINED, PLUS (1) ONE CUBIC FOOT OF VOLUME FOR EACH ADDITIONAL 100 SQUARE FEET OF FLOOR AREA TO BE DRAINED INTO THE OIL SEPARATOR.

   NEW GARAGE AREA EQUALS 3,058 SQ FT
   NEW WASH BAY AREA EQUALS 1,652 SQ FT
   TOTAL SQUARE FOOTAGE OF AREAS EQUALS 4,710 SQ FT THEREFORE 6 CUBIC FEET PLUS 46 CUBIC FEET EQUALS A TOTAL OF 52 CUBIC FEET REQUIRED.
2. OIL SEPARATOR SHALL BE CONSTRUCTED OF WELDED STEEL WITH INTEGRAL WASTE OIL STORAGE COMPARTMENT, MODEL OST-5652-300, MANUFACTURED BY ROCKFORD SANITARY SYSTEMS, INC. WITH 250 GPM INTERMITTENT FLOW, 397 GALLON, 53 CUBIC FEET STATIC HOLDING CAPACITY AND 300 GALLON INTEGRAL OIL STORAGE COMPARTMENT. FOUR INCH INLET AND OUTLET AND FOUR INCH VENT CONNECTIONS, VISIBLE DOUBLE-WALL OUTSIDE TRAP SEAL, REMOVABLE FILTER SCREEN, NON-REMOVABLE SEPARATOR SCREENS, 3/8 INCH NONSKID TREADPLATE COVER FOR FLUSH-WITH-FLOOR INSTALLATION REINFORCED FOR HEAVY TRAFFIC, COVER SECURED WITH STAINLESS STEEL BOLTS, HEAVY DUTY LEAKPROOF GASKET. OPEX SHOP COATING INSIDE AND BITUMINOUS COATING OUTSIDE. SEPARATOR SHALL BE INSTALLED WITH THE FOLLOWING OPTIONS: ANCHOR FLANGE, SEDIMENT BASKET, INTEGRAL EXTENSION, HEAVY TRAFFIC REINFORCED COVER AND AND 120 VOLT HIGH LEVEL SENSOR ALARM.

ISSUED FOR BID JULY 19, 2023
NOT FOR CONSTRUCTION

Revision	Date	Description	Rev By
1	8/9/2023	ADDENDUM 1	

This document, and all information and work product represented by and contained herein, is the sole and exclusive property of McCarthy Engineering Associates, Inc. and is not to be used, published, or disclosed to any person or entity for any purpose, in whole or in part, without the prior written consent of McCarthy Engineering Associates, Inc. Any unauthorized use, publication, or disclosure is expressly prohibited, and will be subject to all legal remedies available to McCarthy Engineering Associates, Inc. Any unauthorized use of these plans, specifications, designs, drawings, and other work product, or any modifications thereof, for any purpose, is strictly prohibited, and McCarthy Engineering Associates, Inc. expressly reserves all rights to legal action against any party engaging in such unauthorized use. Any such party shall be deemed to have agreed to indemnify and hold harmless McCarthy Engineering Associates, Inc. for any and all liability, claims, damages, losses, expenses, and attorney's fees arising out of any such unauthorized use. Any such party shall be deemed to have agreed to pay a sum equal to the actual damages, plus all profits derived from such unauthorized use, and all attorney's fees and costs incurred by McCarthy Engineering Associates, Inc. in connection with any such unauthorized use. Any such party shall be deemed to have agreed to pay attorney's fees and costs incurred by McCarthy Engineering Associates, Inc. in connection with any such unauthorized use.
Copyright, 2023, McCarthy Engineering Associates, Inc. All rights reserved

McCARTHY
ENGINEERING ASSOCIATES, INC.
2500 East High Street, Suite 630
Pottstown, PA 19464
www.McCarthy-Engineering.com
Phone: 610.313.8001
555 Van Reed Road
Suite 2
Wyomissing, PA 19610

SEAL:

PLUMBING
RISER DIAGRAMS
" PUBLIC WORKS FACILITY "

Client: WYOMISSING BOROUGH
Location: WYOMISSING BOROUGH, BERKS COUNTY, PENNSYLVANIA
Date: JULY 19, 2023

DRAWN BY:	PROJ. MANAGER:
EPG	NEC
PRINCIPAL:	SCALE:
JCM	AS NOTED

DRAWING NO.
P-6

PROJECT NO.
230004

PLUMBING SPECIFICATIONS:

PLUMBING SPECIFICATIONS

1.1 THE ARCHITECTURAL GENERAL CONDITIONS SHALL APPLY TO AND FORM A PART OF THIS SECTION OF THESE SPECIFICATIONS.

1.2 PROVIDE ALL MATERIALS, LABOR, EQUIPMENT, TOOLS AND SUPERVISION AND PERFORM ALL OPERATIONS NECESSARY FOR THE PROPER AND COMPLETE EXECUTION OF ALL PLUMBING WORK IN STRICT ACCORDANCE WITH THE SPECIFICATIONS AND DRAWINGS.

1.3 ALL WORK SHALL BE IN ACCORDANCE WITH PENNSYLVANIA UNIFORM CONSTRUCTION CODE AND ALL APPLICABLE SECTIONS OF THE NATIONAL FIRE PROTECTION ASSOCIATION, NATIONAL ELECTRIC CODE, OSHA, 2015 INTERNATIONAL PLUMBING CODE, 2015 INTERNATIONAL FUEL GAS CODE AND ALL OTHER STATE AND LOCAL AUTHORITIES HAVING JURISDICTION AND APPLICABLE MANUFACTURER'S RECOMMENDATIONS.

1.4 THE CONTRACTOR SHALL VISIT THE SITE, EXAMINE ALL CONDITIONS, AND MAKE ALLOWANCES FOR DIFFICULTIES AND CONTINGENCIES AFFECTING THE PROPER EXECUTION OF THIS CONTRACT.

1.5 THE CONTRACTOR SHALL OBTAIN AND PAY ALL FEES NECESSARY FOR PERMITS AND INSPECTIONS REQUIRED WITH THIS WORK.

1.6 THE CONTRACTOR SHALL VERIFY ALL UTILITY SERVICE INFORMATION SHOWN ON THE DRAWINGS WITH THE LOCAL UTILITY COMPANY PRIOR TO SUBMITTING A BID. ANY CHANGES OR SERVICE CHARGES IMPOSED BY THE UTILITY COMPANY SHALL BE QUALIFIED AND INCLUDED IN THE BID.

1.7 ALL EQUIPMENT SHALL BE TESTED, LISTED AND LABELED BY AN APPROVED AUTHORITY (UL, AGA, ETL) AND SHALL BE INSTALLED IN ACCORDANCE WITH ITS LISTING.

1.8 ALL EQUIPMENT, MATERIALS, AND WORKMANSHIP SHALL BE GUARANTEED FOR A MINIMUM OF ONE YEAR FROM THE DATE OF ACCEPTANCE BY THE OWNER.

1.9 WHERE PRODUCTS ARE SPECIFIED BY BRAND NAME, CATALOG NUMBERS OR BY NAMES OF MANUFACTURERS, THE REFERENCE IS INTENDED TO BE DESCRIPTIVE AND NOT RESTRICTIVE AND IS SOLELY FOR THE PURPOSE OF INDICATING THE TYPE AND QUALITY OF ITEM. AN APPROVED EQUAL WILL BE GIVEN CONSIDERARTION UNLESS INDICATED OTHERWISE. SUBSTITUTIONS FOR SPECIFIED EQUIPMENT WILL IS UNDER THE CONDITIONS THAT NO ADDITONAL CHARGE TO THE PROJECT IS PERMITTED FOR ASSOCIATED CHANGES IN POWER REQUIREMENTS, PIPE SIZE, GAS CONSUMPTION, WEIGHT, SUPPORT, ETC. THE CONTRACTOR SHALL FULLY REVIEW THE PROPOSED SUBSTITUTION TO ENSURE ALL ASPECTS OF PERFORMANCE, SERVICE CLEARANCE, PHYSICAL SUPPORT, POWER FEEDS, ETC. COORDINATE AND ARE ACCOUNTED FOR PRIOR TO SUBMITTING THE ALTERNATIVE EQUIPMENT FOR REVIEW.

1.10 SUBMIT SHOP DRAWINGS FOR REVIEW PRIOR TO ORDERING ANY EQUIPMENT

1.11 THE CONTRACTOR RESPONSIBLE FOR WORK COVERED BY THESE SPECIFICATIONS SHALL COORDINATE AND COOPERATE WITH ALL OTHER TRADES. TRADES THAT HAVE WORK CONNECTED WITH THE PLUMBING WORK SHALL BE NOTIFIED FOR INSTALLATION REQUIREMENTS AND SCHEDULING. THE CONTRACTOR SHALL SCHEDULE HIS WORK TO AVOID ANY INTERRUPTION OF ANY UTILITY SERVICES TO THE OPERATION AREAS OF THE BUILDING DURING NORMAL WORKING HOURS. INTERRUPTION OF SERVICES SHALL BE DONE DURING OFF HOURS AT NO ADDITIONAL COST TO THE OWNER.

1.12 THE CONTRACTOR SHALL PERFORM ALL DEMOLITION AS REQUIRED AND SHALL CUT AND PATCH AS REQUIRED TO PERFORM THE DEMOLITION WORK. ALL OPENINGS MUST BE REPAIRED TO MATCH ADJACENT FINISHES. THE OWNER SHALL BE GIVEN THE OPPORTUNITY TO RETAIN OWNERSHIP OF ALL REMOVED MATERIALS AND EQUIPMENT.

1.13 ALL CUTTING AND PATCHING OF EVERY NATURE REQUIRED IN CONNECTION WITH THIS CONTRACT SHALL BE DONE BY THIS CONTRACTOR WITH MECHANICS EXPERIENCED IN THEIR RESPECTIVE TRADES. ALL PATCHING SHALL MATCH ADJACENT FINISHES. ALL WORK SHALL BE COORDINATED TO AVOID CUTTING OF WORK IN PLACE AND INTERFERING WITH OTHER OPERATIONS.

1.14 IN COMPLIANCE WITH ACT 38, CONTACT INDIVIDUAL COMPANIES TO HAVE UTILITY LOCATIONS MARKED IN THE FIELD AND TO OTHERWISE LOCATE UNDERGROUND OBJECTS AS MAY BE NECESSARY PRIOR TO THE START OF CONSTRUCTION. PENNSYLVANIA LAW REQUIRES THREE WORKING DAYS NOTICE FOR THE CONSTRUCTION PHASE AND TEN WORKING DAYS IN DESIGN STAGE. CALL PENNSYLVANIA ONE CALL SYSTEM, INC. (1-800-242-1776, AS OF THIS WRITING).

1.15 ALL EXCAVATIONS REQUIRED FOR INSTALLATION OF PIPE SHALL HAVE SOLID, UNDISTURBED BOTTOMS, AND SHALL BE SUBJECT TO APPROVAL BY THE OWNER'S REPRESENTATIVE PRIOR TO PIPING PLACEMENT. SHOULD BOTTOMS BECOME SOFT OR WET BEFORE PIPING IS PLACED, ALL SUCH UNSUITABLE BOTTOMS SHALL BE REMOVED AT NO COST TO THE OWNER AND FILLED WITH CONCRETE.

1.16 BACKFILL ALL EXCAVATIONS PERFORMED UNDER THIS CONTRACT AS REQUIRED TO SATISFY FINISHED GRADE REQUIREMENTS.

1.17 FURNISH AND INSTALL ALL NECESSARY HANGERS, INSERTS, SUPPORTS SUPPLEMENTARY STEEL, ETC., TO PROPERLY SUPPORT ALL EQUIPMENT AND PIPING IN AN APPROVED MANNER AND IN FULL ACCORDANCE WITH THE MANUFACTURER'S RECOMMENDATIONS.

1.18 ALL DOMESTIC COLD, HOT AND HOT WATER CIRCULATION WATER PIPING WITHIN THE BUILDING SHALL BE HARD DRAWN TYPE "L" COPPER TUBING IN ACCORDANCE WITH ASTM-B88. FITTINGS SHALL BE WROUGHT COPPER OR CAST BRASS. VALVES SHALL BE CAST BRASS UNLESS NOTED OTHERWISE. HANGERS FOR SUPPORTING COPPER TUBING SHALL BE COPPERIZED. ALL WATER PIPING BELOW FINISH FLOOR SHALL BE TYPE "K" COPPER ASTM B-88. FITTINGS SHALL BE WROUGHT COPPER. ALL JOINTS SHALL BE MADE WITH SOLDER AND FLUX HAVING A LEAD CONTENT OF NOT MORE THAN 0.2 PERCENT.

1.19 ALL SANITARY AND VENT PIPING ABOVE THE FINISHED FLOOR SHALL BE NO-HUB SERVICE WEIGHT CAST IRON IN ACCORDANCE WITH ASTM A74; JOINTS SHALL BE A NEOPRENE GASKET WITH STAINLESS STEEL CLAMP AND SHIELD ASSEMBLY, INSTALL IN ACCORDANCE WITH THE MANUFACTURERS RECOMMENDATIONS. SANITARY AND VENT PIPING LOCATED BELOW THE FLOOR SHALL BE SERVICE WEIGHT CAST IRON WITH HUB AND SPIGOT ENDS. JOINTS SHALL BE CONNECTED WITH NEOPRENE PUSH-ON COMPRESSION GASKETS, INSTALL IN ACCORDANCE WITH THE MANUFACTURERS RECOMMENDATIONS.

A. WHERE PERMITTED BY THE LOCAL AUTHORITY, SANITARY AND VENT PIPING SCHEDULE 40 PVC, ASTM D2665, D2949, WITH PVC FITTINGS (DWV TYPE) AND SOLVENT WELD JOINTS WILL BE GIVEN CONSIDERATION. PVC PIPING SHALL NOT BE USED IN RETURN AIR PLENUM TYPE CEILINGS OR IN FIRE-RATED CEILING ASSEMBLIES (CONTRACTOR TO VERIFY THESE AREAS WITH ARCHITECT). PVC PIPING SHALL NOT BE USED WITHOUT WRITTEN AUTHORIZATION FROM THE LOCAL AUTHORITY HAVING JURISDICTION, THE LOCAL FIRE MARSHALL AND OWNERS APPROVAL.

1.20 FUEL GAS PIPING ABOVE THE FLOOR INSIDE THE BUILDING SHALL BE SCHEDULE 40 BLACK STEEL WITH MECHANICAL JOINTS UP TO 2-1/2 INCHES INSTALLED IN ACCORDANCE WITH THE INTERNATIONAL FUEL GAS CODE, WELDED FOR THREE (3) INCHES AND ABOVE. ALL FUEL GAS PIPING LOCATED OUTSIDE THE BUILDING BELOW GRADE SHALL BE POLYETHYLENE WITH HEAT-FUSION JOINTS IN ACCORDANCE WITH THE INTERNATIONAL FUEL GAS CODE. BRANCH PIPING TO APPLIANCES SHALL BE COMPLETE WITH A SHUTOFF VALVE, UNION, DIRT LEG AND ANY REGULATORS NECESSARY TO ENSURE PROPER EQUIPMENT OPERATION (COORDINATE WITH THE RECOMMENDATIONS OF THE EQUIPMENT MANUFACTURER).

1.21 WHERE PIPING PASSES THROUGH FIRE RESISTING PORTIONS OF THE STRUCTURE, AN APPROVED FIRE-STOPPING DEVICE SHALL BE INSTALLED TO MAINTAIN THE FIRE RATING OF THAT PORTION OF THE STRUCTURE. ALL FIRE STOPPING DEVICES USED SHALL BE LISTED INTUMESCENT MATERIALS SUCH AS A CAULK, SEALANT, PUTTY, WRAP STRIPS, ETC. AS REQUIRED TO PROPERLY FIRE STOP ALL VOIDS. FIRE STOPPING MATERIAL SHALL BE AS MANUFACTURED BY 3M, HILTI, PRO-SET SYSTEMS OR EQUAL.

1.22 ALL SHUTOFF VALVES SHALL BE BALL VALVES. ALL BALL AND CHECK VALVES SHALL BE ALL BRONZE, SWEATED PATTERN SUITABLE FOR 125-PSI WORKING PRESSURE.

A. ALL VALVES AND PIPING EXPOSED TO VIEW SHALL BE CHROME PLATED BRASS.

B. GAS SHUTOFF VALVES SHALL HAVE A QUARTER-TURN OPERATION AND SHALL BE AGA APPROVED AND U.L. LISTED FOR SYSTEM PRESSURE. INSTALL IN ACCORDANCE WITH THE NATIONAL FUEL GAS CODE REQUIREMENTS.

C. FOR GAS SYSTEMS THAT EXCEED 14 INCHES W.C. (0.5 PSIG): INSTALL A GAS PRESSURE REGULATING VALVE, IN ADDITION TO THE REGULATOR SUPPLIED WITH THE EQUIPMENT. INSTALL AN INLINE REGULATOR JUST UPSTREAM OF THE REGULATOR THAT IS SUPPLIED WITH THE EQUIPMENT. REGULATOR SHALL BE CAPABLE OF REDUCING THE HIGH PRESSURE IN THE SUPPLY LINE DOWN TO 11 INCHES W.C. VENT EACH REGULATOR INDIVIDUALLY TO OUTSIDE THE BUILDING IN ACCORDANCE WITH THE NATIONAL FUEL GAS CODE AND ALL LOCAL REQUIREMENTS. GAS PRESSURE REGULATING VALVES SHALL BE AS MANUFACTURED BY MAXITROL (OR APPROVED EQUAL) AND SHALL BE SIZED IN ACCORDANCE WITH THE MANUFACTURER'S REQUIREMENTS.

D. VACUUM RELIEF VALVE (WATER HEATERS ONLY) SHALL BE BRONZE CONSTRUCTION WITH A SILICONE DISC. MAXIMUM WATER PRESSURE, 200 POUNDS; MAXIMUM WATER TEMPERATURE, 250 DEGREES F; MODEL 36A, MANUFACTURED BY WATTS.

1.23 WATER HAMMER ARRESTORS SHALL BE ZURN, MODEL NO. Z-1700 OR EQUAL AND SHALL BE INSTALLED WHERE INDICATED ON THE DRAWINGS.

1.24 INSULATION

A. INSULATE ALL COLD WATER, HOT WATER, HOT WATER RECIRCULATION PIPING, PIPE FITTINGS, BACKFLOW ASSEMBLIES, AND VALVES WITH MATERIALS HAVING A "K" FACTOR OF 0.27 AT 75 DEGREES F MEAN TEMPERATURE, A FLAME SPREAD RATING OF 25 OR LESS AND SMOKE DEVELOPED RATING OF 50 OR LESS.

1. THICKNESS:
   - COLD WATER AND HOT WATER RUNOUTS UP TO TWO INCHES = 1/2-INCH THICK
   - COLD WATER MAINS UP TO ONE INCH = 1/2-INCH THICK
   - COLD WATER MAINS 1-1/4 TO 2 INCHES = 3/4-INCH THICK
   - HOT WATER MAINS UP TO 2 INCHES = 1 INCH THICK
2. MATERIALS:
   - VAPOR BARRIER ALL SERVICE JACKETED FIBERGLASS WITH FITTINGS COVERED WITH PRE-SHAPED PLASTIC COVERS.
   - FOAMED CELLULAR FLEXIBLE ELASTOMERIC INSULATION WITH MITER CUT FITTINGS WITH VAPOR BARRIER JACKET (FOR THICKNESS UP TO ONE INCH). ALL JOINTS SHALL BE GLUED IN ACCORDANCE WITH THE INSULATION MANUFACTURER'S RECOMMENDATIONS.
3. MANUFACTURERS - CERTAINTEED, MANVILLE, OWENS CORNING, KNAUF, ARMSTRONG OR APPROVED EQUAL.

1.25 CLEANOUT FITTINGS SHALL BE INSTALLED WHERE INDICATED AND AS REQUIRED. CLEANOUTS SHALL BE MADE BY MEANS OF LONG SWEEP ELL OR Y AND BEND. CLEANOUTS SHALL BE THE SAME SIZE PIPING UP TO AND INCLUDING 4 INCH SIZE. CLEANOUTS SHALL BE PROVIDED IN HORIZONTAL RUNS AT NOT OVER 50 FEET INTERVALS, CLEANOUTS IN FLOORS FOR CONCEALED PIPING SHALL BE ADJUSTABLE COATED CAST IRON BODY, TAPERED THREADED BRONZE PLUG, HEAVY-DUTY NICKALOY DECK TYPE, SCORIATED COVER WITH VANDALPROOF SCREWS. CLEANOUTS IN WALLS FOR CONCEALED PIPING SHALL BE CAST IRON T BRANCH CLEANOUT WITH BRONZE RAISED HEAD PLUG, LEAD SEAL AND VANDALPROOF POLISHED STAINLESS-STEEL ROUND ACCESS COVER.

1.26 PLUMBING FIXTURES

A. INCLUDES THE FOLLOWING PLUMBING FIXTURES AND RELATED COMPONENTS:

1. WATER CLOSETS.
2. URINALS
3. LAVATORIES.
4. HAND WASH FOUNTAIN
5. SHOWERS
6. SINKS
7. MOP SERVICE BASIN
8. UTILITY SINK
9. FAUCETS FOR LAVATORIES, SHOWERS AND SINKS.
10. FLUSHOMETER VALVES FOR URINALS
11. TOILET SEATS.
12. PROTECTIVE SHIELDING GUARDS

B. FIXTURES SHALL BE OF THE TYPE AND QUALITY INDICATED. FIXTURES SHALL BE COMPLETE WITH ALL NECESSARY TRIM AND APPURTENANCES NECESSARY FOR A COMPLETE INSTALLATION. ALL EXPOSED TRIM AND PIPING SHALL BE 17-GAUGE CHROME-PLATED BRASS. TRIM INCLUDES ONE-PIECE CHROME-PLATED ESCUTCHEONS ON ALL EXPOSED WATER SUPPLY AND WASTE PIPING PENETRATING WALLS OR FLOORS. ALL SUPPLY PIPING SHALL BE VALVED AT EACH FIXTURE. STOP VALVES SHALL BE CHROME-PLATED BRASS WITH 'T'-HANDLE.

C. ALL FAUCET CONTROL VALVES, ETC., NOT INCLUDING STOPS IN WATER SUPPLIES, SHALL HAVE RENEWABLE SEATS OR REMOVABLE BARRELS CONTAINING SEATS. ALL FAUCETS SHALL BE REQUIRED TO MEET THE REQUIREMENTS OF ANSI/NSF STANDARD #61, DRINKING WATER SYSTEM COMPONENTS - HEALTH EFFECTS, SHALL BE CERTIFIED TO MEET THE COMMERCIAL REQUIREMENTS AND SUBMITTAL DATA SHALL INDICATE CERTIFICATION RATING.

D. FIXTURES SHALL BE SET PLUMB AND SQUARE. JOINTS FORMED WHERE FIXTURES COME IN CONTACT WITH WALLS AND/OR FLOORS SHALL BE SEALED AND GROUTED.

E. FIXTURES SHALL BE TURNED OVER TO THE OWNER ABSOLUTELY SOLID IN ITS POSITION AND POLISHED AND CLEANED CONDITION.

F. DEFINITIONS

1. ABS: ACRYLONITRILE-BUTADIENE-STYRENE PLASTIC.
2. ACCESSIBLE FIXTURE: PLUMBING FIXTURE THAT CAN BE APPROACHED, ENTERED, AND USED BY PEOPLE WITH DISABILITIES.
3. CAST POLYMER: CAST-FILLED-POLYMER-PLASTIC MATERIAL. THIS MATERIAL INCLUDES CULTURED-MARBLE AND SOLID-SURFACE MATERIALS.
4. CULTURED MARBLE: CAST-FILLED-POLYMER-PLASTIC MATERIAL WITH SURFACE COATING.
5. FITTING: DEVICE THAT CONTROLS THE FLOW OF WATER INTO OR OUT OF THE PLUMBING FIXTURE. FITTINGS SPECIFIED IN THIS SECTION INCLUDE SUPPLIES AND STOPS, FAUCETS AND SPOUTS, SHOWER HEADS AND TUB SPOUTS, DRAINS AND TAILPIECES, AND TRAPS AND WASTE PIPES. PIPING AND GENERAL-DUTY VALVES ARE INCLUDED WHERE INDICATED.
6. FRP: FIBERGLASS-REINFORCED PLASTIC.
7. PVC: POLYVINYL CHLORIDE PLASTIC.
8. MMA: POLYMETHYL METHACRYLATE (ACRYLIC) PLASTIC.
9. SOLID SURFACE: NONPOROUS, HOMOGENEOUS, CAST-POLYMER-PLASTIC MATERIAL WITH HEAT-, IMPACT-, SCRATCH-, AND STAIN-RESISTANCE QUALITIES.

G. QUALITY ASSURANCE

1. SOURCE LIMITATIONS: OBTAIN PLUMBING FIXTURES, FAUCETS, AND OTHER COMPONENTS OF EACH CATEGORY THROUGH ONE SOURCE FROM A SINGLE MANUFACTURER. EXCEPTION: IF FIXTURES, FAUCETS, OR OTHER COMPONENTS ARE NOT AVAILABLE FROM A SINGLE MANUFACTURER, OBTAIN SIMILAR PRODUCTS FROM OTHER MANUFACTURERS SPECIFIED FOR THAT CATEGORY.
2. ELECTRICAL COMPONENTS, DEVICES, AND ACCESSORIES: LISTED AND LABELED AS DEFINED IN NFPA 70, ARTICLE 100, BY A TESTING AGENCY ACCEPTABLE TO AUTHORITIES HAVING JURISDICTION, AND MARKED FOR INTENDED USE.
3. REGULATORY REQUIREMENTS: COMPLY WITH REQUIREMENTS IN ICC A117.1, "ACCESSIBLE AND USABLE BUILDINGS AND FACILITIES"; PUBLIC LAW 90-480, "ARCHITECTURAL BARRIERS ACT"; AND PUBLIC LAW 101-336, "AMERICANS WITH DISABILITIES ACT"; FOR PLUMBING FIXTURES FOR PEOPLE WITH DISABILITIES.
4. REGULATORY REQUIREMENTS: COMPLY WITH REQUIREMENTS IN PUBLIC LAW 102-486, "ENERGY POLICY ACT," ABOUT WATER FLOW AND CONSUMPTION RATES FOR PLUMBING FIXTURES.
5. NSF STANDARD: COMPLY WITH NSF 61, "DRINKING WATER SYSTEM COMPONENTS--HEALTH EFFECTS," FOR FIXTURE MATERIALS THAT WILL BE IN CONTACT WITH POTABLE WATER.
6. SELECT COMBINATIONS OF FIXTURES AND TRIM, FAUCETS, FITTINGS, AND OTHER COMPONENTS THAT ARE COMPATIBLE.

H. FIXTURES AND MISCELLANEOUS TRIM

1. VITREOUS CHINA FIXTURES (WATER CLOSET, URINAL , LAVATORY)
   a. COMPLY WITH THE FOLLOWING APPLICABLE STANDARDS AND OTHER REQUIREMENTS SPECIFIED FOR PLUMBING FIXTURES: ASME A112.19.2M.
   b. AVAILABLE MANUFACTURES SUBJECT TO COMPLIANCE WITH REQUIREMENTS, PROVIDE PRODUCTS BY ONE OF THE FOLLOWING: AMERICAN STANDARD, KOHLER, MANSFIELD OR EQUAL.
2. STAINLESS STEEL FIXTURES (HAND WASH FOUNTAIN AND SINK)
   a. COMPLY WITH THE FOLLOWING APPLICABLE STANDARDS AND OTHER REQUIREMENTS SPECIFIED FOR PLUMBING FIXTURES: ASME A112.19.3, ASME A112.18.1,ICC/ANSI 117.1
   b. AVAILABLE MANUFACTURES SUBJECT TO COMPLIANCE WITH REQUIREMENTS, PROVIDE PRODUCTS BY ONE OF THE FOLLOWING: SINK - AMERICAN STANDARD, KOHLER, JUST OR EQUAL. HAND WASH FOUNTAIN - BRADLEY, ACORN, WILLOUGHBY OR EQUAL
3. SHOWER ENCLOSURE
   a. COMPLY WITH THE FOLLOWING APPLICABLE STANDARDS AND OTHER REQUIREMENTS SPECIFIED FOR PLUMBING FIXTURES: PLASTIC SHOWER ENCLOSURES; ANSI Z124.2. SLIP-RESISTANT BATHING SURFACES; ASTM F 462.
   b. AVAILABLE MANUFACTURES SUBJECT TO COMPLIANCE WITH REQUIREMENTS, PROVIDE PRODUCTS BY ONE OF THE FOLLOWING: AQUATIC BATH, AQUA BATH, AQUARIUS, COMFORT DESIGNS, LASCO BATHWARE OR EQUAL.
4. SHOWER VALVE
   a. COMPLY WITH THE FOLLOWING APPLICABLE STANDARDS AND OTHER REQUIREMENTS SPECIFIED FOR PLUMBING FIXTURES. SHOWER VALVE; ASME A112.18.1, ASSE 1016
   b. AVAILABLE MANUFACTURES SUBJECT TO COMPLIANCE WITH REQUIREMENTS, PROVIDE PRODUCTS BY ONE OF THE FOLLOWING: POWERS, SYMMONS OR EQUAL.
5. PLASTIC PLUMBING FIXTURES
   a. COMPLY WITH THE FOLLOWING APPLICABLE STANDARDS AND OTHER REQUIREMENTS SPECIFIED FOR PLUMBING FIXTURES: PLASTIC PLUMBING FIXTURES; IAMPO Z124-11
   b. AVAILABLE MANUFACTURES SUBJECT TO COMPLIANCE WITH REQUIREMENTS, PROVIDE PRODUCTS BY ONE OF THE FOLLOWING: DUPONT, FIAT OR APPROVED EQUAL.
6. FAUCETS
   a. COMPLY WITH THE FOLLOWING APPLICABLE STANDARDS AND OTHER REQUIREMENTS SPECIFIED FOR FAUCETS AND SUPPLY FITTINGS; ASME A112.18.1
   b. AVAILABLE MANUFACTURES SUBJECT TO COMPLIANCE WITH REQUIREMENTS, PROVIDE PRODUCTS BY ONE OF THE FOLLOWING: MOEN COMMERCIAL, DELTA, SLOAN OR APPROVED EQUAL.
7. FLUSHOMETER VALVES
   a. COMPLY WITH THE FOLLOWING APPLICABLE STANDARDS AND OTHER REQUIREMENTS SPECIFIED FOR FLUSH VALVES AND SPUDS FOR URINALS; ASME A112.19.5
   b. AVAILABLE MANUFACTURES SUBJECT TO COMPLIANCE WITH REQUIREMENTS, PROVIDE PRODUCTS BY ONE OF THE FOLLOWING: SLOAN OR APPROVED EQUAL.
8. FLOOR DRAINS
   a. DURA-COATED CAST IRON BODY WITH TWO INCH BOTTOM OUTLET, SEEPAGE PAN, SIX (6) INCH DIAMETER STRAINER,
   b. AVAILABLE MANUFACTURERS SUBJECT TO COMPLIANCE WITH REQUIREMENTS, PROVIDE PRODUCTS BY ONE OF THE FOLLOWING: JAY R. SMITH, WADE, ZURN OR EQUAL.
9. PROVIDE TRAP SEALING COMPONENT AT ALL FLOOR DRAINS AND FUNNEL DRAINS. THE INSTALLATION OF A SEALING COMPONENT ON THE FIXTURE DRAIN OUTLET TO REDUCE TRAP SEAL LOSS SHALL BE PERMITTED IN LIEU OF A TRAP PRIMER WHERE APPROVED BY THE LOCAL AUTHORITY.
   a. TRAP SEALING COMPONENT SHALL BE PROSET TRAP GUARD, MANUFACTURED BY PROSET SYSTEMS. INSTALL IN ACCORDANCE WITH MANUFACTURER'S INSTRUCTIONS.

1.27 GAS FIRED WATER HEATER

A. FURNISH AND INSTALL A COMMERCIAL GAS WATER HEATER WHERE SHOWN ON THE DRAWINGS IN ACCORDANCE WITH THE MANUFACTURER'S INSTALLATION INSTRUCTIONS. WATER HEATER SHALL BE UL LISTED AND AGA CERTIFIED AS AN AUTOMATIC STORAGE TYPE UNIT AND ASME STAMPED WORKING PRESSURE. WATER HEATER STORAGE TANK SHALL MEET OR EXCEED THE THERMAL EFFICIENCY AND STANDBY LOSS REQUIREMENTS OF ASHRAE STANDARD 90.1B-2001

B. GAS FIRED WATER HEATER SHALL BE SUITABLE FOR SEALED COMBUSTION DIRECT VENTING USING A FOUR INCH DIAMETER ABS AIR INTAKE PIPE AND FOUR INCH DIAMETER ABS EXHAUST PIPE FOR A TOTAL DISTANCE OF 120 EQUIVALENT FEET OF VENT AND 120 EQUIVALENT FEET OF INTAKE. THE HEATER SHALL BE FACTORY ASSEMBLED AND TESTED. THE POWER BURNER SHALL BE OF A DESIGN THAT REQUIRES NO SPECIAL CALIBRATIONS ON START-UP. THE HEATER SHALL BE APPROVED FOR ZERO INCH CLEARANCES TO COMBUSTIBLES. THE CONTROL SHALL BE AN INTEGRATED SOLID-STATE TEMPERATURE AND IGNITION CONTROL DEVICE WITH INTEGRAL DIAGNOSTICS, LED FAULT DISPLAY CAPABILITY AND A DIGITAL DISPLAY OF TEMPERATURE SETTINGS. THE TANK SHALL BE FOAM INSULATED AND EQUIPPED WITH A FACTORY INSTALLED ASME RATED TEMPERATURE PRESSURE RELIEF VALVE. THIS HEATER SHALL BE LISTED BY SCAQMD RULE 1146.2 LOW NO_X. WATER HEATER SHALL BE OF THE SEAMLESS GLASS LINED STEEL TANK CONSTRUCTION IN WHICH THE GLASS COATING IS APPLIED TO THE WATERSIDE SURFACES OF THE TANK AFTER THE TANK HAS BEEN ASSEMBLED AND WELDED. THE CONDENSING FLUE COIL SHALL BE COATED ON THE FLUE GAS SIDE WITH ACID RESISTANT GLASS LINING DESIGNED FOR USE IN CONDENSING HEATERS. PIPE THE DISCHARGE FROM RELIEF VALVE TO NEAREST FLOOR DRAIN. PROVIDE BALL TYPE DRAIN VALVE ON HEATER FOR DRAINING PURPOSES.

C. WATER HEATER SHALL BE AS MANUFACTURED BY A.O. SMITH, BRADFORD WHITE OR STATE INDUSTRIES. SEE SCHEDULE ON DRAWING FOR CAPACITIES, MODEL NUMBER AND ADDITIONAL ACCESSORIES.

1.28 TANKLESS ELECTRIC WATER HEATER

A. FURNISH AND INSTALL COMMERCIAL ELECTRIC TANKLESS WATER HEATERS WHERE SHOWN ON THE PLANS. THE ELEMENTS SHALL BE SIZED SPECIFICALLY FOR THE VOLTAGE GIVEN.

B. TANKLESS WATER HEATER SHALL BE COMPLETE WITH DIGITAL MICROPROCESSING TEMPERATURE CONTROL CAPABLE OFMAINTAINING OUTLET TEMPERATURE OF +/-1°F ACCURACY AND USES AN ASSE 1070 APPROVED INTEGRATED MIXING VALVE TO CONFORM TO UPC 407.3. ELEMENT SHALL BE REPLACEABLE CARTRIDGE INSERT. UNIT SHALL HAVE REPLACEABLE FILTER IN THE INLET CONNECTOR. ELEMENT SHALL BE IRON FREE, NICKEL CHROME MATERIAL. HEATER SHALL BE FITTED WITH 1/2" PIPE COMPRESSION FITTINGS (5/8" OD) OR 3/8" (1/2" OD) FITTINGS, TO ELIMINATE NEED FOR SOLDERING. MAXIMUM OPERATING PRESSURE OF 150 PSI.

C. TANKLESS WATER HEATER SHALL BE AS MANUFACTURED BY EEMAX OR APPROVED EQUAL. MODEL AND CAPACITIES SHALL BE AS LISTED IN SCHEDULE ON DRAWINGS.

1.29 EXPANSION TANK

A. WELDED STEEL TESTED AND STAMPED IN ACCORDANCE WITH ASME SPECIFICATIONS, RATE FOR WORKING PRESSURE 125 PSIG, WITH FLEXIBLE DIAPHRAGM SEALED INTO TANK, INLINE MODEL (PROVIDE SUPPORT PER MANUFACTURER'S RECOMMENDATIONS). FOR USE WITH POTABLE WATER SYSTEMS.

B. MODEL ST-12-C MANUFACTURED BY AMTROL.

1.30 HOT WATER CIRCULATION PUMP

A. IN-LINE CIRCULATING PUMP SHALL BE OF THE HORIZONTAL SYSTEM LUBRICATED TYPE SPECIFICALLY DESIGNED AND GUARANTEED FOR QUIET OPERATION. THE PUMP BODY SHALL BE LEAD-FREE BRONZE SUITABLE FOR 230°F (110°C) AND OPERATION AT 150 PSIG WORKING PRESSURE. PUMP SHALL HAVE A CERAMIC SHAFT SUPPORTED BY CARBON BEARINGS. BEARINGS ARE TO BE LUBRICATED BY THE CIRCULATING FLUID. MOTOR STATOR TO BE ISOLATED FROM CIRCULATING FLUID THROUGH USE OF STAINLESS-STEEL CAN. ROTOR TO BE SHEATHED IN STAINLESS STEEL. MOTORS SHALL BE NON-OVERLOADING AT ANY POINT ON THE PUMP CURVE. MOTORS TO HAVE BUILT-IN IMPEDANCE PROTECTION.

B. PUMP CONTROL SHALL BY AN AQUASTAT AND TIME CLOCK. COORDINATE ALL ELECTRICAL CHARATERISTICS AND WIRING WITH THE ELECTRICAL CONTRACTOR.

C. PUMP SHALL BE AS MANUFACTURED BY XYLEM - BELL & GOSSETT OR APPROVED EQUAL OF TACO OR GROUNDFOS. PUMP MODEL, CAPACITIES AND ELECTRICAL CHARACTERISTICS SHALL BE AS LISTED IN SCHEDULE ON DRAWINGS.

1.31 THERMOSTATIC MIXING VALVES

A. MIXING VALVE SHALL BE THERMOSTATIC TYPE WITH UNION INLET STRAINERS, CHECK STOPS, THERMOMETER, SHUTOFF VALVES AND ROUGH BRONZE FINISH; MODEL LFLM495, MANUFACTURED BY POWERS. VALVE SHALL BE ASSE 1017 COMPLIANT. INSTALL AND SET UP SYSTEM IN ACCORDANCE WITH THE MANUFACTURER'S RECOMMENDATIONS. SET MIXING VALVE TO SUPPLY DOMESTIC HOT WATER AT 140 DEGREES F.

B. INDIVIDUAL MIXING VALVES SHALL BE PROVIDED AT ALL LAVATORIES AND SINKS. MIXING VALVE SHALL BE THERMOSTATIC TYPE WITH UNION INLET STRAINERS, CHECK STOPS, THERMOMETER, SHUTOFF VALVES AND ROUGH BRONZE FINISH; MODEL LFG480, MANUFACTURED BY POWERS. VALVE SHALL BE ASSE 1070 COMPLIANT DOWN TO 0.25 GPM. INSTALL AND SET UP SYSTEM IN ACCORDANCE WITH THE MANUFACTURER'S RECOMMENDATIONS. SET MIXING VALVE TO SUPPLY DOMESTIC HOT WATER AT 110 DEGREES F.

C. THE EMERGENCY MIXING VALVE SHALL BE IN COMPLIANCE WITH ANSI Z358.1 TO CONTROL AND MAINTAIN THE TEMPERATURE OF THE TEPID WATER TO THE SAFETY STATION . MIXING VALVE WILL CLOSE DOWN ON FAILURE OF COLD-WATER SUPPLY AND INCLUDE SPECIAL INTERNAL COLD-WATER BYPASS CAPABLE OF 20 GPM AT 30 PSI UPON FAILURE OF HOT WATER SUPPLY. UNIT SHALL BE SELF-CONTAINED AND INCLUDE A THERMOSTATIC WATER MIXING VALVE, A DIAL THERMOMETER ON THE OUTLET, UNION ANGLE CHECKSTOPS, WALL MOUNTING BRACKET, PIPING AND FITTINGS FACTORY ASSEMBLED AND TESTED, TOP INLETS AND TOP OUTLET. EMERGENCY MIXING VALVE SHALL BE MODEL TM-800-LF, MANUFACTURED BY LEONARD VALVE, POWERS' MODEL ETV20BQ000 OR APPROVED EQUAL.

1.32 GENERAL PIPE INSTALLATION

A. IN GENERAL, INSTALL ALL PIPING SO AS TO PRESERVE ACCESS TO ALL VALVES, TRAPS, EQUIPMENT, ETC. ALL PIPING, VALVES, FITTINGS, ETC., SHALL BE KEPT A SUFFICIENT DISTANCE FROM THE OTHER WORK TO PERMIT A CLEARANCE OF NOT.LESS THAN 1 INCH BETWEEN THE FINISHED COVERING ON SUCH PIPING AND ALL ADJACENT WORK, WEATHER UNDER THIS OR OTHER TRADES. ALL PIPING SHALL BE INSTALLED AS CLOSE AS POSSIBLE TO WALLS, CEILINGS, COLUMNS (CONSISTENT WITH PROPER SPACE FOR COVERING, REMOVAL OF PIPE, ETC. SO AS TO OCCUPY THE MINIMUM OF SPACE. HORIZONTAL RUNS OF PIPING SHALL BE SUBSTANTIALLY SUPPORTED FROM THE BUILDING STRUCTURE TO MAINTAIN THE REQUIRED PITCH AND GRADE OF THE PIPE LINES. HANGER RODS SHALL BE CONNECTED TO THE BEAM CLAMPS, INSERTS OR HANGER CLIPS WELDED TO THE STRUCTURAL STEEL. THE HANGING OF ONE PIPE FROM ANOTHER SHALL NOT BE PERMITTED. PROPER CARE SHALL BE EXERCISED IN THE ERECTION OF ALL PIPING TO ENSURE PROPER DRAINAGE AND CIRCULATION, INCLUDING PROPER PROVISION FOR EXPANSION AND CONTRACTION OF PIPING. POCKETS OR TRAPS WHEREIN AIR CAN COLLECT SHALL NOT BE PERMITTED. ALL PIPING SHALL BE REAMED TO REMOVE CUTTING BURRS AND SHARP EDGES. ALL COPPER TUBING SHALL BE CUT WITH SQUARE ENDS AND ALL BURRS AND FINS REMOVED. TUBING SHALL BE CAREFULLY HANDLED AND PROTECTED TO AVOID DAMAGE. REDUCING FITTINGS SHALL BE USED WHEREVER POSSIBLE. THE USE OF BUSHINGS SHALL BE PROHIBITED. ECCENTRIC REDUCERS SHALL BE USED. THREADS FOR SCREW FITTINGS SHALL BE AMERICAN STANDARD TAPER PIPE THREADS. ALL PIPING SHALL BE CAPPED DURING INSTALLATION TO KEEP THE SYSTEM CLEAN. LOCATE ALL WATER PIPING WITHIN HEATED SPACES WITH PROVISIONS FOR DRAINING ALL LINES.

B. DURING CONSTRUCTION, THE CONTRACTOR SHALL MAINTAIN A RECORD SET OF INSTALLATION PRINTS. RECORD THESE PRINTS, ALL DEVIATIONS FROM THE CONTRACT DRAWINGS, INCLUDING BUT NOT LIMITED TO, PIPE ROUTING, SYSTEM CONNECTION POINTS, PIPE SIZES AND EQUIPMENT LOCATION CHANGES. AT THE COMPLETION OF THE WORK, THE CONTRACTOR SHALL TRANSFER THIS NEATLY ONTO THREE SETS OF PRINTS AND FORWARD THESE PRINTS AND THE AS-BUILT PRINTS TO THE OWNER AND TENANT.

1.33 BALANCING

A. PROVIDE BALANCING OF HOT WATER RECIRCULATION PIPING UNDER THE DIRECT SUPERVISION OF A QUALIFIED PROFESSIONAL ENGINEER WITH ACCURATELY CALIBRATED INSTRUMENTS AND SUBMIT SIX COPIES OF COMPLETE TEST DATA FOR REVIEW PRIOR TO FINAL INSPECTION ON AABC OR NEBB FORMS.AFTER THE COMPLETION OF THE INSTALLATION OF ALL PIPING AND CIRCUIT SETTERS AND FLUSHING OF THE SYSTEM, OPERATE THE SYSTEM AND MAKE ALL REQUIRED ADJUSTMENTS AND ALTERATIONS TO DELIVER THE FLOWS SHOWN ON THE DRAWINGS. THE CONTRACTOR SHALL PROVIDE THE NECESSARY GAUGE CONNECTIONS, TEMPERATURE CONNECTIONS, FLOW FITTINGS, TEST EQUIPMENT, ETC. TO OBTAIN THE DATA REQUIRED.CHECK, ADJUST AND RECORD THE FLOW RATES AND DELTA PRESSURES AT EACH CIRCUIT SETTER.CHECK AND RECORD THE PUMP SUCTION AND DISCHARGE PRESSURES, TOTAL DYNAMIC HEAD, SYSTEM FLOWS AND ZONE FLOWS.CHECK AND RECORD THE INLET WATER TEMPERATURE, FLOW AND OUTLET TEMPERATURES AT ALL THERMOSTATIC MIXING VALVES.SUBMIT A STARTUP REPORT INDICATING FLOW CONDITIONS, PRESSURES AND TEMPERATURES.

B. SET UP EACH MASTER MIXING VALVE IN ACCORDANCE WITH THE MANUFACTURES RECOMMENDATIONS. SET MIXING VALVES TO SUPPLY WATER TEMPERATURES LISTED. ENGAGE THE SERVICES OF THE VALVE MANUFACTURE REPRESENTATIVE TO CONFIRM PROPER SETUP FLOWS.

C. CHECK AND SET OPERATION OF ALL ELECTRONIC FAUCETS AND FLUSH VALVES. SET FAUCET TIME OUT ADJUSTMENT SETTINGS TO MEET EACH INDIVIDUAL APPLICATION. VERIFY SETTING WITH OWNERS' REPRESENTATIVE.

D. THE "START-UP" OF THE WATER HEATER SYSTEM SHALL BE CARRIED OUT BY THE CONTRACTOR, THE CONTRACTOR SHALL CHECK THE OPERATION OF ALL WATER HEATER THERMOSTAT SETPOINTS AND OPERATIONS.

E. THE CONTRACTOR SHALL CHECK THE OUTET TEMPERATURE AT LAVATORY AND SINK FIXTURES, THERMOSTATIC MIXING VALVE(S) AND WATER HEATER THERMOSTAT SETPOINTS AND OPERATIONS.

1.34 STERILIZATION OF DOMESTIC WATER SYSTEM

A. BEFORE BEING PLACED IN SERVICE, ALL DOMESTIC WATER LINES SHALL BE CHLORINATED USING A METHOD THAT IS SATISFACTORY TO THE WATER AUTHORITY OR THE AUTHORITY HAVING JURISDICTION. IN THE ABSENCE OF A PRESCRIBED METHOD, THE PROCEDURE AS DESCRIBED BELOW SHALL BE USED.

B. PRIOR TO CHLORINATION, ALL DIRT AND FOREIGN MATTER SHALL BE REMOVED BY A THOROUGH FLUSHING. THIS SHALL BE DONE AFTER THE PRESSURE TEST AND LEAKAGE TEST.

C. A CHLORINE HYPOCHLORITE SOLUTION SHALL BE APPLIED BY MEANS OF A SOLUTION FEED DEVICE OR THE GAS SHALL BE FED DIRECTLY FROM A CHLORINE CYLINDER EQUIPPED WITH PROPER DEVICES FOR REGULATING THE RATE OF FLOW AND THE EFFECTIVE DIFFUSE OF GAS WITHIN THE PIPE.

D. WATER SHALL BE CONTROLLED TO FLOW SLOWLY INTO THE SYSTEM DURING THE APPLICATION OF CHLORINE IN SUCH PROPORTIONS THAT THE CHLORINE DOSE APPLIED TO THE WATER ENTERING THE PIPE SHALL BE AT LEAST 40 TO 50 PARTS PER MILLION.

E. TREATED WATER SHALL BE RETAINED IN THE SYSTEM LONG ENOUGH TO DESTROY ALL NON-SPORE FORMING BACTERIA. THIS PERIOD SHALL BE AT LEAST TWENTY-FOUR HOURS. A LONGER CHLORINE CONTACT TIME MAY BE REQUESTED BY THE OWNER'S REPRESENTATIVE AT NO ADDITIONAL COST TO THE OWNER.

F. AFTER THE CHLORINE TREATED WATER HAS BEEN RETAINED FOR THE REQUIRED TIME, THE CHLORINE RESIDUAL AT THE PIPE EXTREMITIES AND AT OTHER REPRESENTATIVE POINTS SHALL BE AT LEAST FIVE PARTS PER MILLIONS.

G. FOLLOWING CHLORINATION, ALL TREATED WATER SHALL BE THOROUGHLY FLUSHED FROM THE SYSTEM AT ITS EXTREMITIES UNTIL THE REPLACEMENT WATER THROUGHOUT ITS LENGTH SHALL, UPON TEST, BE EQUAL TO THE WATER QUALITY SERVED FROM THE WATER SUPPLY SYSTEM.

H. SHOULD THE INITIAL TREATMENT IN THE OPINION OF THE OWNER'S REPRESENTATIVE PROVE INEFFECTIVE, THE CHLORINATION PROCEDURE SHALL BE REPEATED UNTIL CONFIRMED TESTS SHOW THAT WATER SAMPLED FROM THE SYSTEM CONFORMS TO THE REQUIREMENTS.

1.35 TEST OF DRAINAGE SYSTEM

A. ALL PLUMBING AND DRAINAGE PIPING SHALL BE TESTED BY PLUGGING ALL OPENINGS AND FILL SYSTEM WITH WATER TO THE TOP OF ALL VENT PIPES. THE WATER SHALL STAND FOR 30 MINUTES FOR INSPECTION. ALL TESTS MUST COMPLY WITH LOCAL AUTHORITY REQUIREMENTS.

1.36 TEST OF DOMESTIC WATER PIPING

A. ALL WATER LINES SHALL BE TESTED TO A HYDROSTATIC PRESSURE EQUAL TO 1-1/2 TIMES THE MAXIMUM OPERATING PRESSURE. THE SYSTEM SHALL BE LEAK-FREE FOR 24 HOURS AT THIS PRESSURE.

1.37 TEST OF GAS PIPING

A. ALL GAS LINES SHALL BE TESTED TO A HYDROSTATIC PRESSURE OF 60 PSIG FOR A MINIMUM OF EIGHT (8) HOURS WITHOUT A LOSS OF PRESSURE. FOLLOWING INSTRUCTIONS 2.11 AND 2.12 IN NFPA MANUAL 54.

1.38 THE CONTRACTOR SHALL FURNISH THREE SETS OF INSTRUCTION MANUALS TO THE OWNER AT COMPLETION OF CONSTRUCTION.

---000---

McCARTHY ENGINEERING ASSOCIATES, INC.
www.McCarthy-Engineering.com
2500 East High Street, Suite 630
Pottstown, PA 19464
Phone: 610.373.8001

Project No. 230004

Revision	Date	Description	Rev.By
1	8/9/2023	ADDENDUM 1	

This document and all information and work product represented by and contained herein, is the sole and exclusive property of McCarthy Engineering Associates, Inc. The information contained herein is licensed only for limited use by the intended recipient, and no license, permission or authority is extended, directly or implied, to any party without the express written permission of McCarthy Engineering Associates, Inc. Copyright, 2017, McCarthy Engineering Associates, Inc. All rights reserved

McCARTHY ENGINEERING ASSOCIATES, INC.
555 Van Reed Road, Suite 2, Wyomissing, PA 19610
www.McCarthy-Engineering.com
Phone: 610.373.8001
2500 East High Street, Suite 630, Pottstown, PA 19464

SEAL:

PLUMBING SPECIFICATIONS
" PUBLIC WORKS FACILITY "

Client: WYOMISSING BOROUGH
Location: WYOMISSING BOROUGH, BERKS COUNTY, PENNSYLVANIA
Date: JULY 19, 2023

DRAWN BY:	PROJ. MANAGER:
EPG	NEC
PRINCIPAL:	SCALE:
JCM	AS NOTED

DRAWING NO. P-7

PROJECT NO. 230004

ISSUED FOR BID JULY 19, 2023
NOT FOR CONSTRUCTION

FIRE SUPPRESSION SYSTEM SPECIFICATIONS:

1.1 THE ARCHITECTURAL GENERAL CONDITIONS SHALL APPLY TO AND FORM A PART OF THIS SECTION OF THESE SPECIFICATIONS.

1.2 PROVIDE ALL MATERIALS, LABOR, EQUIPMENT, TOOLS AND SUPERVISION AND PERFORM ALL OPERATIONS NECESSARY FOR THE PROPER AND COMPLETE EXECUTION OF ALL FIRE SUPPRESSIONS SYSTEM WORK IN STRICT ACCORDANCE WITH THESE SPECIFICATIONS AND DRAWING PLANS. WORK SHALL INCLUDE BUT NOT BE LIMITED TO: A NEW FIRE SUPPRESSION SYSTEM WATER SERVICE SUPPLY LINE, SERVICE ENTRANCE AND ALARM CHECK RISER ASSEMBLY EQUIPMENT, SPRINKLERS, SPRINKLER DROPS, SPRINKLERS BRANCH PIPING, CROSS AND FEED MAIN AND ALL RELATED FITTINGS, VALVES, HANGERS, ETC., AS REQUIRED.

1.3 ALL FIRE SUPPRESSION WORK SHALL BE UNDER THE SUPERVISION OF AND BY A QUALIFIED FIRE SUPPRESSION CONTRACTOR. ALL WORK SHALL BE IN ACCORDANCE WITH ALL APPLICABLE SECTIONS OF THE PENNSYLVANIA UNIFORM CONSTRUCTION CODE, NATIONAL FIRE PROTECTION ASSOCIATION, NATIONAL ELECTRIC CODE, OSHA AND ALL OTHER STATE AND LOCAL AUTHORITIES HAVING JURISDICTION AND APPLICABLE MANUFACTURER'S RECOMMENDATIONS.

1.4 THE SPRINKLER SYSTEM DESIGN AND INSTALLATION SHALL BE BY A RECOGNIZED SPRINKLER CONTRACTOR WHO IS AN EXPERIENCED SPECIALIST IN DESIGN AND CONSTRUCTION OF AUTOMATIC SPRINKLER SYSTEMS. THE CONTRACTOR SHALL SUBMIT TO THE OWNER OR THE OWNER'S REPRESENTATIVE, IN WRITING, EVIDENCE OF COMPARABLE EXPERIENCE PRIOR TO BEGINNING THE PROJECT.

1.5 DESIGN REQUIREMENTS

A. THE CONTRACTOR SHALL DESIGN AND INSTALL A WET PIPE SPRINKLER SYSTEM TO PROVIDE COMPLETE FIRE PROTECTION COVERAGE FOR ALL HEATED SPACES AND STAIRWELLS. THE SPRINKLER SYSTEM PIPE SIZING SHALL BE BY HYDRAULIC DESIGN

1. THE DESIGN OF OFFICE AND ALL SIMILAR AREAS SHALL BE LIGHT HAZARD WITH A DENSITY OF 0.10 GPM PER SQUARE FEET OVER 1500 SQUARE FEET.
2. THE DESIGN OF GARAGE, WASH BAY AND STORAGE AREAS SHALL BE ORDINARY HAZARD GROUP II WITH A DENSITY OF 0.20 GPM PER SQUARE FEET OVER 1500 SQUARE FEET.
3. THE SYSTEM DESIGN SHALL INCLUDE A 250 GPM HOSE STREAM ALLOWANCE.

B. CONTRACTOR SHALL OBTAIN MOST CURRENT PRESSURE AND FLOW READINGS FROM LOCAL WATER AUTHORITY OR THE LOCAL FIRE MARSHALL. PRESSURE AND FLOW READING SHALL BE OBTAINED FROM A LOCATION AT OR NEAR THE PROJECT SITE. IF PRESSURE AND FLOW READINGS ARE OUTDATED OR NOT AVAILABLE, THE CONTRACTOR SHALL PERFORM A FLOW TEST OR MAKE APPROPRIATE ARRANGEMENTS WITH THE LOCAL AUTHORITY TO HAVE ONE PERFORMED AT OR NEAR THE PROJECT SITE.

C. PROVIDE NEW FIRE PROTECTION SERVICE ENTRANCE EQUIPMENT AND ALARM CHECK RISER VALVE. THE FIRE SUPPRESSION SYSTEM SERVICE ENTRANCE WORK SHALL INCLUDE BUT NOT BE LIMITED TO; 6 INCH WATER SUPPLY LINE, DOUBLE CHECK BACKFLOW ASSEMBLY, FIRE DEPARTMENT SIAMESE CONNECTION AND 6 INCH ALARM CHECK VALVE ASSEMBLY WITH FLOW SWITCH AND MAIN DRAIN.

D. PRIOR TO INSTALLATION, THE FIRE PROTECTION CONTRACTOR SHALL PREPARE DESIGN DRAWINGS OF THE AUTOMATIC SPRINKLER SYSTEM AT A SCALE OF NOT LESS THAN 1/8 INCH = 1 FOOT 0 INCHES AND SUBMIT THEM AND EQUIPMENT TO BE USED TO THE LOCAL FIRE MARSHAL AND THE OWNER'S INSURANCE COMPANY FOR REVIEW AND APPROVAL. A PROFESSIONAL ENGINEER REGISTERED IN THE STATE WHERE THE PROJECT IS LOCATED SHALL SEAL THE DRAWINGS. AFTER APPROVAL, THE DRAWINGS SHALL BE SUBMITTED TO THE OWNER'S REPRESENTATIVE FOR REVIEW IN ACCORDANCE WITH SECTION 15700: PLUMBING AND FIRE PROTECTION – GENERAL. NO WORK SHALL BE DONE ON THE SYSTEM OR MATERIALS ORDERED, UNTIL DRAWINGS HAVE BEEN APPROVED.

1.6 THE CONTRACTOR SHALL VISIT THE SITE; EXAMINE ALL CONDITIONS AND MAKE ALLOWANCES FOR DIFFICULTIES AND CONTINGENCIES AFFECTING THE PROPER EXECUTION OF THIS WORK.

1.7 THE CONTRACTOR SHALL OBTAIN AND PAY ALL FEES NECESSARY FOR PERMITS AND INSPECTIONS REQUIRED WITH HIS WORK.

1.8 SUBMISSION OF A BID OR PROPOSAL SHALL BE CONSTRUED AS EVIDENCE THAT THE CONTRACTOR HAS FAMILIARIZED THEMSELF WITH THE PLANS, SPECIFICATIONS AND BUILDING SITE. CLAIMS MADE SUBSEQUENT TO BIDS FOR MATERIAL AND/OR LABOR DUE TO DIFFICULTIES ENCOUNTERED WILL NOT BE RECOGNIZED, UNLESS DIFFICULTIES COULD NOT HAVE BEEN FORESEEN EVEN THOUGH PROPER EXAMINATION HAD BEEN MADE.

1.9 ALL MATERIALS SHALL BE NEW, CLEAN AND WITHOUT DEFECTS. ANY DEFECTIVE MATERIALS SHALL BE REMOVED FROM THE JOB SITE. ALL MATERIALS AND EQUIPMENT SHALL CONFORM TO NFPA 13. ALL EQUIPMENT SHALL BE TESTED, LISTED AND LABELED BY AN APPROVED AUTHORITY (ANSI, ASME, ASTM, FM, UL) AND SHALL BE INSTALLED IN ACCORDANCE WITH ITS LISTING.

1.10 STANDARDS

A. MEET REQUIREMENTS AND RECOMMENDATIONS OF APPLICABLE PORTIONS OF THE LATEST EDITION OF THE STANDARDS LISTED.

1. AMERICAN SOCIETY OF MECHANICAL ENGINEERS (ASME)
2. AMERICAN SOCIETY FOR TESTING AND MATERIALS (ASTM)
3. NATIONAL FIRE PROTECTION ASSOCIATION (NFPA 13 & 24)
4. UNDERWRITERS LABORATORIES (UL)
5. FACTORY MUTUAL (FM)
6. AMERICAN NATIONAL STANDARDS INSTITUTE (ANSI)
7. INTERNATIONAL BUILDING CODE (2015)
8. INTERNATIONAL FIRE CODE (2015)

1.11 MATERIALS AND EQUIPMENT

A. ALL MATERIALS AND EQUIPMENT SHALL BE OF MAKE AND TYPE LISTED BY UNDERWRITERS' LABORATORIES, INC. OR APPROVED BY THE FACTORY MUTUAL LABORATORIES. MATERIALS SHALL BE OF APPROVED, STANDARD QUALITY, AND THE ENTIRE INSTALLATION SHALL BE ACCOMPLISHED IN A THOROUGH AND WORKMANLIKE MANNER. ALL WORK AND MATERIALS SHALL CONFORM TO CURRENT REQUIREMENTS OF THE NFPA AS PUBLISHED IN THEIR STANDARD NO. 13 AND 24. THE PROVISIONS, INCLUDING APPENDICES, OF THE STANDARDS, UNLESS OTHERWISE SPECIFIED, SHALL BE FOLLOWED IN TOTAL, WHETHER THE STIPULATIONS LISTED THEREIN ARE DIRECTED OR RECOMMENDED.

B. PIPE AND FITTINGS

1. BURIED PIPE SHALL BE CEMENT LINED, DUCTILE IRON WATER PIPE WITH STANDARDIZED MECHANICAL JOINTS IN ACCORDANCE WITH NFPA. ALL BURIED PIPE LOCATED OUTSIDE THE BUILDING SHALL HAVE A MINIMUM COVER OF 36 INCHES.
2. ALL PIPE ABOVE GROUND AND WITHIN THE BUILDING SHALL BE SCHEDULE 40 BLACK STEEL WITH SCREWED OR MECHANICAL COUPLING JOINTS (WITH ROLLED GROOVE ENDS) AS PERMITTED BY NFPA. DRY SYSTEM PIPING SHALL BE SCHEDULE 40 GALVANIZED STEEL. ALL PIPING AND FITTINGS SHALL BE RATED FOR THE MAXIMUM PRESSURE. PIPING MATERIALS AND DIMENSIONS SHALL COMPLY WITH NFPA. PIPING INSTALLATION SHALL ADHERE TO THE MANUFACTURER'S INSTALLATION GUIDELINES. THE MATERIALS SHALL ALSO COMPLY WITH THE FOLLOWING:
   a. SPECIFICATION FOR BLACK AND HOT DIPPED ZINC COATED (GALVANIZED) WELDED AND SEAMLESS STEEL PIPE FOR FIRE PROTECTION, ASTM A795.
   b. SPECIFICATION FOR WELDED AND SEAMLESS PIPE, ASTM A53.
   c. WROUGHT STEEL PIPE, ANSI B36.10M.
   d. SPECIFICATION FOR ELECTRIC RESISTANCE WELDED STEEL PIPE, ASTM A135.
   e. STANDARD VICTAULIC FITTINGS MAY BE USED FOR TEES, ELBOWS, REDUCERS, AND ADAPTORS. OTHER SPECIAL VICTAULIC DEVICES MAY BE USED IN THE SPRINKLER PIPING BUT ONLY IF THEY HAVE SPECIFIC UL APPROVAL. VICTAULIC DEVICES SHALL BE INSTALLED IN ACCORDANCE WITH THE MANUFACTURER'S INSTRUCTIONS.

C. METAL PIPE SUPPORTS, SWAY BRACES, HANGERS, CLAMPS, ETC. AND ALL OTHER ACCESSORIES SHALL BE OF AN APPROVED PATTERN AND PLACED TO CONFORM TO THE REQUIREMENTS OF NFPA 13. HANGERS SHALL NOT UNDER ANY CIRCUMSTANCES PIERCE ANY DUCTWORK.

D. VALVES

1. ALL VALVES SHALL BE RATED FOR THE MAXIMUM WORKING PRESSURE TO WHICH THEY ARE EXPOSED (175 PSI MINIMUM).
2. VERTICAL POST INDICATOR VALVE, STOCKHAM VALVES FIG-951A AND ATTACHMENTS, FITTINGS SUITABLE FOR USE WITH STOCKHAM VALVES FIG-632 NON-RISING STEM SHUTOFF VALVE. PROVIDE A SUPERVISORY TAMPER SWITCH FOR WIRING TO THE FIRE ALARM SYSTEM.
3. DOUBLE CHECK DETECTOR ASSEMBLY: ANSI/ASSE 1048, AWWA C510-97. THE ASSEMBLY SHALL CONSIST OF TWO POSITIVE SEATING CHECK VALVES LOCATED BETWEEN TWO RESILIENT SEATED SHUTOFFS WITH A HYDRAULICALLY BALANCED BYPASS LINE AND FOUR TEST COCKS. THE MAIN VALVE BODY SHALL BE MANUFACTURED FROM 300 SERIES STAINLESS STEEL TO PROVIDE CORROSION RESISTANCE. THE CHECK VALVES SHALL BE OF THERMOPLASTIC CONSTRUCTION WITH STAINLESS STEEL HINGE PINS, CAM ARM, AND CAM BEARING. THE CHECK VALVES SHALL UTILIZE A SINGLE TORSION SPRING DESIGN TO MINIMIZE PRESSURE DROP THROUGH THE ASSEMBLY. THE CHECK VALVES SHALL BE MODULAR AND SHALL SEAL TO THE MAIN VALVE BODY BY THE USE OF AN O-RING. THERE SHALL BE NO BRASS OR BRONZE PARTS USED WITHIN THE CHECK VALVE ASSEMBLY. THE CHECK VALVE SEATS SHALL BE OF MOLDED THERMOPLASTIC CONSTRUCTION. THE USE OF SEAT SCREWS AS A RETENTION METHOD IS PROHIBITED. ALL INTERNAL PARTS SHALL BE ACCESSIBLE THROUGH A SINGLE COVER OF THE VALVE ASSEMBLY. THE VALVE COVER SHALL BE HELD IN PLACE THROUGH THE USE OF A SINGLE GROOVED STYLE TWO BOLT COUPLING. THE BYPASS LINE SHALL BE HYDRAULICALLY SIZED TO ACCURATELY MEASURE LOW FLOW. THE BYPASS LINE SHALL CONSIST OF A METER, A SMALL DIAMETER DOUBLE CHECK ASSEMBLY WITH TEST COCKS, AND ISOLATION VALVES. THE BYPASS LINE DOUBLE CHECK VALVE SHALL HAVE A SINGLE ACCESS COVER, TWO INDEPENDENTLY OPERATING MODULAR POPPET CHECK VALVES, AND TOP MOUNTED TEST COCKS. THE ASSEMBLY SHALL BE A WATTS REGULATOR COMPANY SERIES 774DCDA.
4. FIRE DEPARTMENT CONNECTION: FLUSH MOUNT WALL TYPE, TWO WAY OUTLET WITH THREAD SIZE TO SUIT FIRE DEPARTMENT HARDWARE REQUIREMENTS, INDIVIDUAL DROP CLAPPER VALVES, TOGETHER WITH PLUGS, THREADED DUST CAP, AND CHAINS OF MATCHING MATERIALS AND FINISH. 3/4 INCH AUTOMATIC DRIP DRAIN TO EXTERIOR, ESCUTCHEON LETTERED "AUTO SPRINKLER," FINISH SHALL BE CHROME PLATED. CONNECTION SHALL BE ALLEN CO. NO. 232 PROJECTING SIAMESE WITH SILL COOK.
5. GATE VALVES WITHIN THE BUILDINGS SHALL BE OS&Y TYPE, IRON BODY WITH BRASS TRIM. SCREWED END GATE VALVES SHALL BE BRONZE. CHECK VALVES SHALL BE OF A TYPE HAVING IRON BODY, BRASS SEAT AND DISCS, CLEARWAY SWINGING, WITH DRIP CONNECTIONS. SCREWED END ANGLE AND GLOBE VALVES SHALL BE BRONZE. PROVIDE POST-INDICATING VALVES ON ALL SERVICE SHUTOFFS WHERE REQUIRED BY THE LOCAL AUTHORITY.
6. SHUTOFF VALVES 2-1/2 INCHES AND LARGER SHALL BE IRON BODY, BRONZE TRIMMED, OS&Y GATE WITH RENEWABLE WEDGE AND FLANGED CONNECTIONS. SHUTOFF VALVES TWO INCHES AND SMALLER SHALL BE BRONZE, OS&Y GATE, WEDGE DISC.
7. DRAIN VALVES SHALL BE GLOBE VALVES, BRONZE BODY, RUBBER DISC, AND UNION BONNET, 175 WWP, NIBCO KT-65.
8. ALARM CHECK VALVE SHALL BE EQUIPPED WITH A REMOVABLE COVER/CLAPPER ASSEMBLY. ALARM VALVE SHALL BE LISTED FOR INSTALLATION IN THE VERTICAL OR HORIZONTAL POSITION. ALARM VALVE SHALL BE EQUIPPED WITH GAUGE CONNECTIONS ON THE SYSTEM SIDE AND SUPPLY SIDE OF THE VALVE CLAPPER. ALARM VALVE SHALL BE EQUIPPED WITH AN EXTERNAL BYPASS TO ELIMINATE FALSE WATER FLOW ALARMS. ALARM VALVE TRIM PIPING SHALL BE GALVANIZED. VALVE TRIM SHALL INCLUDE A CONNECTION FOR A NON-INTERRUPTIBLE PRESSURE SWITCH. ALARM VALVE BODY SHALL BE DUCTILE IRON AND AVAILABLE WITH GROOVED BY GROOVED, FLANGED BY GROOVED, AND FLANGED BY FLANGED SUPPLY AND DISCHARGE OUTLETS, RESPECTIVELY. MAXIMUM WATER WORKING PRESSURE SHALL BE 250 PSI (17 BAR). ALARM CHECK VALVE SHALL BE VIKING CORPORATION MODEL J-1.
   a. PORTED ALARM CONNECTIONS ON SPRINKLER RISER VALVE SHALL BE PIPED TO A RETARD CHAMBER TO ABSORB VARIABLE PRESSURE SURGES. CIRCUIT CLOSER SHALL BE INSTALLED ON RETARD CHAMBER WITH CIRCUIT CLOSER VENT TRIM TO ELIMINATE VAPOR OR HYDRAULIC LOCK AGAINST CIRCUIT CLOSER. RETARD CHAMBER SHALL BE VIKING CORPORATION MODEL C-1. PROVIDE OPTIONAL PRESSURE SWITCH FOR INITIATING ALARM.
   b. WATER FLOW WILL ACTIVATE AN ALARM BY WAY OF AN ALARM PRESSURE SWITCH. THE ALARM PRESSURE SWITCH SHALL BE COMPATIBLE WITH SYSTEM DEVICES. ALARM PRESSURE ENCLOSURE SHALL BE UL LISTED AND FACTORY MUTUAL APPROVED FOR THE APPLICATION IN WHICH IT IS USED. ALARM PRESSURE SWITCH SHALL HAVE THE ABILITY TO BE WIRED FOR CLASS A OR B SERVICE WITH A FACTORY PRESET NON-ADJUSTABLE PRESSURE SETTING OF 4 TO 8 PSI ON RISE IN PRESSURE. ALARM PRESSURE SWITCH SHALL HAVE A 1/2-INCH BRASS THREADED BASE. ALARM PRESSURE SWITCH SHALL BE VIKING CORPORATION MODEL 09470 OR 09471.
9. ALARM CHECK VALVES EQUIPPED WITH A FLOW INDICATING PRESSURE SWITCH OR WATER MOTOR ALARM SHALL BE EQUIPPED WITH A MAIN DRAIN VALVE CAPABLE OF A TEST FLOW THROUGH THE MAIN DRAIN VALVE EQUAL TO THAT OF THE SMALLEST SPRINKLER ORIFICE INSTALLED IN THE SPRINKLER SYSTEM. THIS TEST FLOW SHALL BE DIRECTED THROUGH A PRESSURE-RETARDING CHAMBER TO THE ALARM-INITIATING DEVICE. MAIN DRAIN VALVE CAPABLE OF TEST FLOW SHALL HAVE TWO INCH SUPPLY AND DISCHARGE CONNECTIONS. THE TWO-INCH TEST VALVE SHALL BE LABELED AS TO THE POSITION OF THE DRAIN. VALVE HANDLE WILL DISTINGUISH WHICH FLOW IS BEING DISCHARGED, SYSTEM DRAIN OR SYSTEM TEST. THE TWO-INCH TEST VALVE SHALL BE MANUFACTURED TO PROVIDE AN AVAILABLE MEANS OF LOCKING VALVE IN THE CLOSED OR NON-WATER FLOW POSITION. THE TWO-INCH TEST VALVE SHALL BE OF THE SAME MANUFACTURER AS ALARM CHECK VALVE AND ASSOCIATED APPURTENANCES. THE TEST VALVE SHALL BE VIKING TEST AND DRAIN VALVE MODEL A-1.
10. SUPERVISORY DEVICES
   a. PROVIDE SUPERVISORY SWITCH ON ALL OS&Y GATE VALVES TO DETECT AND INDICATE WHEN THE SUPERVISED VALVE HAS BEEN CLOSED, WHEN THE DEVICE HAS BEEN REMOVED, OR WHEN DEVICE COVER HAS BEEN TAMPERED WITH. DEVICE SHALL BE UL LISTED AND SO MARKED AND FACTORY MUTUAL APPROVED.
      1) VALVE SUPERVISORY SWITCH FOR OS&Y VALVES SHALL BE MODEL OSYU-A AS MANUFACTURED BY POTTER ELECTRIC SIGNAL COMPANY OR APPROVED EQUAL. CONTACT SHALL BE ONE OR TWO SETS OF SPDT (FORM C) CONTACTS AS REQUIRED.
11. PROVIDE A LISTED AUDIBLE ALARM ON THE EXTERIOR OF THE BUILDING IN ACCORDANCE WITH NFPA 13. THE ALARM DEVICE MAY BE A MECHANICALLY ACTIVATED WATER MOTOR GONG DEVICE OR AN ELECTRONIC GONG, BELL, HORN, OR SIREN ACTUATED BY A FLOW SWITCH. ALL REQUIRED POWER, WIRING, AND CONTROL OF THE ALARM SHALL BE THE RESPONSIBILITY OF THE FIRE PROTECTION CONTRACTOR. ALL ELECTRONIC DEVICES SHALL BE IN ACCORDANCE WITH NFPA 72 AND THE NATIONAL ELECTRICAL CODE AND MUST BE FULLY COORDINATED WITH THE ELECTRICAL CONTRACTOR. THE ALARM DEVICE SHALL BE ACTIVATED BY THE WATER FLOW FROM A SINGLE SPRINKLER HEAD. COORDINATE LOCATION WITH THE ARCHITECT.
12. PROVIDE ALL CONTROL AND SIGNAL WIRING REQUIRED FOR PROPER OPERATION OF THE SPRINKLER SYSTEM FLOW SWITCHES AND TAMPER SWITCHES. PROVIDE SIGNAL WIRING BACK TO THE BUILDING FIRE ALARM SYSTEM CONTROL PANEL. ALL WIRING SHALL BE IN ACCORDANCE WITH THE ELECTRICAL SPECIFICATION SECTIONS.

E. IDENTIFICATION OF VALVES

1. ALL CONTROL, DRAIN, AND TEST CONNECTION VALVES SHALL BE PERMANENTLY MARKED (TAGGED) IN ACCORDANCE WITH NFPA 13.

F. METAL PIPE SUPPORTS, SWAY BRACES, HANGERS, CLAMPS, ETC. AND ALL OTHER ACCESSORIES SHALL BE OF AN APPROVED PATTERN AND PLACED TO CONFORM TO THE REQUIREMENTS OF NFPA 13. HANGERS SHALL NOT UNDER ANY CIRCUMSTANCES PIERCE ANY DUCTWORK.

G. STEEL PIPE SLEEVES SHALL BE PROVIDED FOR ALL PIPES PASSING THROUGH MASONRY WALLS, FLOORS, AND CEILINGS. SLEEVES SHALL EXTEND COMPLETELY THROUGH CONSTRUCTION AND, IN THE CASE OF FLOORS, EXTEND TWO INCHES ABOVE THE FLOOR. UNLESS OTHERWISE INDICATED, SLEEVES SHALL BE OF SUCH SIZE AS TO PROVIDE APPROXIMATELY 1/4-INCH ALL AROUND CLEARANCE BETWEEN UNCOVERED PIPE AND SLEEVE. A ONE INCH ALL AROUND CLEARANCE SHALL BE PROVIDED BETWEEN THE SLEEVE AND PASSING PIPE OF COMBUSTIBLE MATERIALS. SLEEVES IN BEARING WALLS SHALL BE STEEL OR CAST IRON PIPE. SLEEVES IN OTHER WALLS AND IN FLOORS SHALL BE GALVANIZED STEEL HAVING A MINIMUM NOMINAL THICKNESS OF 0.0396 INCH (20 GAUGE) OR OTHER APPROVED MATERIAL. THE SPACE BETWEEN PASSING PIPES AND SLEEVES SHALL BE SEALED WITH AN APPROVED FIRESTOPPING MATERIAL. PLATES SHALL BE PROVIDED AT ALL FINISHED SURFACES WHERE EXPOSED PIPING, BARE OR COVERED, PASSES THROUGH FLOORS, WALLS, OR CEILINGS. PLATES SHALL BE FASTENED SECURELY TO PIPE OR COVERING AND SHALL COMPLETELY COVER THE SLEEVE.

H. WATER PRESSURE GAUGES SHALL HAVE THE ABILITY TO RECORD PRESSURES OF 150 PSI WHERE SUPPLY PRESSURES ARE NO GREATER THAN 150 PSI. WHERE SUPPLY PRESSURES EXCEED 150 PSI, THE PRESSURE GAUGES SHALL HAVE THE ABILITY TO RECORD PRESSURES OF 300 PSI. GAUGES SHALL BE UL LISTED AND FACTORY MUTUAL APPROVED. GAUGES SHALL HAVE AN ACRYLONITRILE BUTADIENE STYRENE CASE WITH A POLYCARBONATE WINDOW. THE DIAL SHALL HAVE BLACK FIGURES ON A WHITE BACKGROUND. GAUGES SHALL HAVE A 1/4-INCH BRASS NPT INLET. GAUGES SHALL BE VIKING CORPORATION PRESSURE GAUGE PART NUMBER 01934A.

I. SPRINKLERS

1. SPRINKLERS SHALL BE PENDENT TYPE IN FINISHED AREAS WITH CEILINGS. IN AREAS WITHOUT CEILINGS (EXPOSED PIPING) SPRINKLERS SHALL BE UPRIGHT TYPE. SIDEWALL TYPE SPRINKLERS SHALL BE USED ONLY WHERE NECESSARY. ALL SPRINKLERS SHALL HAVE AN ORDINARY TEMPERATURE RATING (155 DEGREES F), UNLESS REQUIRED OTHERWISE.
2. ALL SPRINKLERS SHALL BE UL LISTED AS REQUIRED BY NFPA AND SHALL BE RATED FOR THE MAXIMUM SYSTEM PRESSURE (175 PSI MINIMUM). NO MIXING OF SPRINKLER BRANDS SHALL BE PERMITTED.
3. CONCEALED PENDENT SPRINKLERS SHALL BE QUICK RESPONSE TYPE WITH WHITE COVER PLATE (135 DEGREE F). VIKING MIRAGE MODEL VK462 OR EQUIVALENT.
4. RECESSED PENDENT TYPE SPRINKLERS SHALL BE QUICK RESPONSE FUSIBLE LINK TYPE WITH RECESSED ESCUTCHEON AND WHITE FINISH. VIKING MODEL M OR EQUIVALENT.
5. RECESSED EXTENDED COVERAGE QUICK RESPONSE FUSIBLE LINK TYPE WITH RECESSED ESCUTCHEON AND WHITE FINISH. VIKING MODEL M OR EQUIVALENT.
6. UPRIGHT TYPE SPRINKLERS SHALL BE QUICK RESPONSE FUSIBLE LINK TYPE WITH BRASS FINISH. VIKING MODEL M OR EQUIVALENT.

J. SPRINKLER CABINET WITH APPROVED NUMBER OF SPRINKLER HEADS (OF ALL TYPES AND RATINGS INSTALLED), A SPRINKLER WRENCH AND A PAIR OF SPRINKLER TONGS SHALL BE PROVIDED FOR EACH SYSTEM.

1. SPRINKLER CABINETS SHALL BE INSTALLED WHERE DIRECTED BY THE OWNER OR THE OWNER'S REPRESENTATIVE.

1.12 NOTIFYING

A. NOTIFY TRADES THAT MAY HAVE WORK ASSOCIATED WITH THE SPRINKLERS OF INSTALLATION REQUIREMENTS AND SCHEDULE.

B. INFORM OWNER'S REPRESENTATIVE OF INSTALLATION SCHEDULE TO ALLOW SUFFICIENT TIME, WITHOUT DELAYING WORK, FOR INSPECTION.

C. COORDINATE WORK TO AVOID CUTTING WORK IN PLACE AND TO AVOID INTERFERENCE WITH OTHER WORK.

D. COORDINATE THE LOCATION OF ALL FIRE PROTECTION EQUIPMENT WITH THE OWNER'S REPRESENTATIVE AND ALL CONTRACTORS WORKING IN THESE AREAS.

1.13 SHOP DRAWINGS

A. SHOP DRAWINGS SHALL BE SUBMITTED FOR APPROVAL IN ACCORDANCE WITH SECTION 15700: PLUMBING AND FIRE PROTECTION – GENERAL.

B. SHOW SIZES AND LOCATIONS, BY DIMENSIONING, OF PIPING, FITTINGS, HOSE CABINETS, SPRINKLER HEADS, EQUIPMENT, AND OTHER SPRINKLER ITEMS. IDENTIFY MATERIALS AND EQUIPMENT BY DESCRIPTION AND NUMBER.

C. SHOW MANUFACTURER'S NAMES, TRADE NAMES, CATALOG NUMBERS, ACCESSORIES, SPECIAL FEATURES, AND RATING DATA FOR ALL EQUIPMENT USED.

D. INDICATE REQUIRED CLEARANCES FOR OPERATING PARTS, FOR REMOVAL AND REINSTALLING, AND FOR SERVICING.

E. INCLUDE PROOF OF THE REVIEW AND APPROVAL OF THE OWNER'S INSURANCE COMPANY AND THE LOCAL FIRE MARSHAL.

F. INCLUDE COPIES OF HYDRAULIC CALCULATIONS FOR REVIEW.

1. HYDRAULIC CALCULATIONS SHALL INCLUDE ALL DATA OBTAINED FROM THE WATER SERVICE FLOW TEST.
2. HYDRAULIC CALCULATIONS SHALL INCLUDE MAXIMUM FLOWS THROUGH ALL PIPING, FITTINGS, AND EQUIPMENT FROM THE POINT WHERE WATER PRESSURE AND FLOW DATA WERE OBTAINED (AT THE WATER MAIN), TO THE HYDRAULICALLY MOST REMOTE DESIGN AREA. HYDRAULIC CALCULATIONS SHALL TAKE INTO ACCOUNT CHANGES IN ELEVATION OF THE SYSTEM PIPING. THESE ELEVATIONS SHALL BE LISTED ON THE SHOP DRAWINGS AND IN THE CALCULATIONS.

1.14 AS-BUILT DRAWINGS AND OPERATION AND MAINTENANCE MANUAL

A. AS-BUILT DRAWINGS AND OPERATION AND MAINTENANCE MANUAL SHALL BE SUBMITTED UPON COMPLETEION OF ALL WORK

B. SHOW EXACT LOCATIONS AND SIZES, AS ACTUALLY INSTALLED, OF PIPING, VALVES, AND OTHER ITEMS THAT WILL NOT BE EASILY ACCESSIBLE AFTER COMPLETION OF WORK.

C. INCLUDE COPIES OF ALL PERMITS, INSPECTIONS AND TEST REPORTS REQUIRED FOR SYSTEM INSTALLATION IN THE OPERATION AND MAINTENANCE MANUAL.

1.15 PROTECTING

A. HANDLE FIRE PROTECTION ITEMS TO AVOID INJURY TO PERSONS AND TO AVOID DAMAGE TO MATERIALS OR WORK IN PLACE. SATISFACTORILY REPAIR OR REMOVE AND REPLACE WORK THAT HAS BEEN DAMAGED.

B. PLUG OR CAP PIPES AND FITTINGS, WHEN NOT IN USE, TO PREVENT ENTRANCE OF EXTRANEOUS MATERIALS.

C. COVER HOLES AND TRENCHES WHEN NOT IN USE. FASTEN OR SECURE PIPES AND OTHER SPRINKLER ITEMS DURING INTERRUPTIONS IN WORK, TO PREVENT DANGER OR DAMAGE.

1.16 DELIVERING AND STORING

A. DELIVER FIRE PROTECTION ACCESSORIES, SMALL-UNMARKED PARTS, AND INCIDENTAL ITEMS TO SITE IN MANUFACTURER'S ORIGINAL, UNOPENED, LABELED CONTAINERS.

B. STORE MATERIALS AND FIXTURES TO PREVENT DAMAGE AND INJURY. STORE FERROUS MATERIALS TO PREVENT RUSTING. STORE FIXTURES TO PREVENT STAINING AND DISCOLORING.

1.17 INSTALLATION

A. INSPECTOR'S TEST VALVES SHALL BE INSTALLED AT THE HIGHEST AND MOST REMOTE PART OF EACH SYSTEM IN RELATION TO THE RISER ASSEMBLY AND SHALL DISCHARGE OUTSIDE THE BUILDING OR TO A DRAIN CAPABLE OF ACCEPTING FULL FLOW UNDER SYSTEM PRESSURE. IN NO CASE SHALL A DIRECT CONNECTION BE MADE TO ANY COMPONENT OF THE SEWER SYSTEM. TEST VALVES SHALL BE CONVENIENTLY ACCESSIBLE WITHIN SEVEN FEET OF THE FLOOR.

B. INSTALLATION OF SPRINKLER SYSTEM SHALL CONFORM TO NFPA 13 AND 24 AND ALL LOCAL REQUIREMENTS.

C. ALL PIPING SHALL BE ACCURATELY CUT TO MEASUREMENTS ESTABLISHED BY THE CONTRACTOR AND SHALL BE WORKED INTO PLACE WITHOUT SPRINGING OR FORCING. IN ANY SITUATIONS WHERE BENDING OF PIPE IS REQUIRED, SUCH BENDING SHALL BE ACCOMPLISHED THROUGH THE USE OF A STANDARD PIPE-BENDING TEMPLATE. PIPE COMPOUND SHALL BE APPLIED TO MALE THREADS ONLY. THE USE OF TEFLON TAPE WILL NOT BE PERMITTED. DRIPS AND DRAINS SHALL BE INSTALLED WHERE NECESSARY AND SHALL DISCHARGE OUTSIDE OF THE BUILDING. IN NO CASE SHALL A DIRECT CONNECTION BE MADE TO ANY COMPONENT OF THE SEWER SYSTEM.

D. SUPPORT PIPING AS CLOSE TO COLUMN SUPPORTS AS POSSIBLE AND AT PANEL POINTS OF JOISTS OR JOIST GIRDERS ONLY. IF HANGER LOAD EXCEEDS 500 POUNDS, THE LOAD SHOULD BE DISTRIBUTED TO AS MANY MEMBERS AS REQUIRED TO REDUCE EACH HANGER LOAD TO LESS THAN 500 POUNDS.

E. ALL MAIN DRAINS SHALL BE PIPED TO DISCHARGE OUTSIDE THE BUILDINGS. VERIFY FINAL LOCATIONS IN THE FIELD WITH THE OWNERS' REPRESENTATIVE.

F. THE INSTALLATION OF ALL SPRINKLER HEADS SHALL BE COORDINATED WITH ALL DIFFUSERS, REGISTERS, GRILLES, LIGHTING, AND ALL OTHER HVAC AND ELECTRICAL EQUIPMENT IN EACH SPACE. IN AREAS WITH ACOUSTICAL TILE CEILINGS, SPRINKLER HEADS SHALL BE POSITIONED IN THE CENTER OF THE CEILING TILES IN AT LEAST ONE DIRECTION UNLESS DIRECTED OTHERWISE BY THE OWNER'S REPRESENTATIVE.

G. ALL EXPOSED PIPING LOCATED IN FINISHED SPACES SHALL BE PAINTED (COLOR SHALL BE SELECTED BY THE ARCHITECT).

1.18 TESTS

A. UPON COMPLETION OF THE INSTALLATION THE SYSTEMS SHALL BE HYDROSTATICALLY TESTED AND FLUSHED AS SPECIFIED IN NFPA 13, IN THE PRESENCE OF THE OWNER OR THE OWNER'S REPRESENTATIVE. THE CONTRACTOR SHALL SUBMIT A SIGNED AND DATED CERTIFICATE TO THE OWNER OR THE OWNER'S REPRESENTATIVE AS STIPULATED IN NFPA 13.

B. TESTING OF BACKFLOW PREVENTION ASSEMBLIES

1. PROVIDE TEST AT THE TIME OF INSTALLATION AND IMMEDIATELY AFTER REPAIRS AND OR RELOCATION FOR THE FOLLOWING: REDUCED PRESSURE PRINCIPLE BACKFLOW PREVENTER ASSEMBLIES, DOUBLE CHECK-VALVE ASSEMBLIES, PRESSURE VACUUM BREAKER ASSEMBLIES, REDUCED PRESSURE DETECTOR FIRE PROTECTION BACKFLOW PREVENTION ASSEMBLIES, DOUBLE CHECK DETECTOR FIRE PROTECTION BACKFLOW PREVENTION ASSEMBLIES, HOSE CONNECTION BACKFLOW PREVENTERS AND SPILLPROOF VACUUM BREAKERS.
   a. CERTIFIED INDIVIDUALS APPROVED BY AN AGENCY ACCEPTABLE TO THE AUTHORITY HAVING JURISDICTION SHALL PERFORM TESTING AND REPAIR OF DEVICES. TESTER QUALIFICATIONS SHALL BE IN ACCORDANCE WITH ASSE 5000 SERIES STANDARDS OR EQUIVALENT. CERTIFICATION FOR REPAIR SHALL BE IN ACCORDANCE WITH ASSE 5030 OR EQUIVALENT. CERTIFICATION SHALL INCLUDE NOT LESS THAN 32 HOURS OF COMBINED CLASSROOM AND PRACTICE TRAINING AND SUCCESSFUL COMPLETION OF A WRITTEN AND PRACTICAL EXAMINATION.
2. PERFORM TESTING PROCEDURES IN ACCORDANCE WITH ONE OF THE FOLLOWING STANDARDS: ASSE 5013, ASSE 5015, ASSE 5020, ASSE 5013, ASSE 5047, ASSE 5048, ASSE 5052, ASSE 5056, CSA B64.10 OR CSA B64.10.1.

C. WHERE TESTS INDICATE THAT THE DEVICE IS NOT FUNCTIONING PROPERLY, IT SHALL BE SERVICED OR REPAIRED IN ACCORDANCE WITH THE MANUFACTURER'S INSTRUCTIONS AND BE RETESTED.

D. COPIES OF TEST REPORTS FOR THE INITIAL INSTALLATION SHALL BE SENT TO THE OWNER, AUTHORITY HAVING JURISDICTION AND TO THE WATER SUPPLIER.

E. ANNUAL INSPECTIONS SHALL BE MADE OF ALL BACKFLOW PREVENTION ASSEMBLIES AND AIR GAPS TO DETECT WHETHER THEY ARE OPERABLE.

1.19 INSPECTING

A. PROVIDE, AS A PART OF THIS WORK, FOUR INSPECTIONS BY SPRINKLER INSTALLER DURING FIRST OPERATIONAL YEAR.

B. SUBMIT INSPECTION REPORTS IN TRIPLICATE, TO THE OWNER OR THE OWNER'S REPRESENTATIVE WITHIN 15 DAYS FROM DATE OF INSPECTION.

---o0o---

LEGEND AND ABBREVIATIONS

Symbol	Description
FP	FIRE PROTECTION WATER SUPPLY
	FLUSHING CONNECTION
	PIPE TURNING DOWN
	PIPE TURNING UP
	PIPE TEE UP
	PIPE TEE DOWN
	UPRIGHT SPRINKLER
	PENDENT SPRINKLER
	CONCEALED PENDENT SPRINKLER
	SIDE WALL SPRINKLER
	FIRE DEPARTMENT STORTZ CONNECTION
	O.S.&Y. GATE VALVE
[FS]	FLOW SWITCH
[TS]	TAMPER SWITCH

Abbreviation	Meaning
ABV	ABOVE
AFF	ABOVE FINISH FLOOR
ALT	ALTERNATE
APPROX	APPROXIMATELY
BLDG	BUILDING
BLW	BELOW
CLG	CEILING
CONT	CONTINUATION
DEPT	DEPARTMENT
DN	DOWN
DWG	DRAWING
E.C.	ELECTRICAL CONTRACTOR
FDC	FIRE DEPARTMENT CONNECTION
FD	FLOOR DRAIN
FLR	FLOOR
FS	FIRE SUPPRESSION
GALV	GALVANIZED
G.C.	GENERAL CONTRACTOR
GPM	GALLONS PER MINUTE
HD	HEAD
INV. EL.	INVERT ELEVATION
M.C.	MECHANICAL CONTRACTOR
NO	NUMBER
P.C.	PLUMBING CONTRACTOR
PL	PLACES
PROJ	PROJECT
REF	REFERENCE
SF	SQUARE FEET
TYP	TYPICAL
W/	WITH

GENERAL NOTES:

1. THE ENTIRE INSTALLATION OF THE FIRE SUPPRESSION SYSTEM SHALL BE IN ACCORDANCE WITH THE LATEST EDITION OF NFPA PAMPHLETS #13 AND #24, THE INTERNATIONAL BUILDING CODES, THE OWNER'S INSURANCE CARRIER AND THE LOCAL FIRE DEPARTMENT.
2. THE INTENT OF FIRE SUPPRESSION DRAWINGS IS FOR APPROVAL PURPOSES ONLY AND TO AID THE FIRE PROTECTION CONTRACTOR IN SYSTEM LAYOUT FOR BIDDING. THE DRAWINGS IDENTIFY SPACE ALLOCATIONS FOR MAJOR ELEMENTS OF THE FIRE PROTECTION SYSTEM, BASIC AREAS OF COVERAGE AND DEVICE TYPES AND AREAS WHICH REQUIRE SPECIAL ATTENTION AND DEVICES. THE SUCCESSFUL FIRE PROTECTION CONTRACTOR IS RESPONSIBLE FOR PROVIDING APPROVED AND COMPLETE DESIGN DRAWINGS AND HYDRAULIC CALCULATIONS.
3. COORDINATE ALL SPRINKLER LOCATIONS WITH LIGHTS, CONDUITS, DUCTS, DIFFUSERS, REGISTER, GRILLES AND IN PARTICULAR ARCHITECTURAL AND STRUCTURAL ELEMENTS TO ASSURE FINAL SYSTEM HARMONIZES WITH THE ARCHITECTURAL FEATURES OF THE BUILDING. ALL SPRINKLERS LOCATIONS SHALL BE COORDINATED WITH ALL SUPPLY AIR DUCTS AND OUTLETS. FINAL SPRINKLER LOCATIONS SHALL BE IN ACCORDANCE WITH NFPA 13 SPACING REQUIREMENTS.
4. INSTALL SPRINKLERS ABOVE AND ALL FIXED OBSTRUCTIONS (OVER 48") WIDE AS REQUIRED. COORDINATE WITH H.V.A.C. AND ELECTRICAL CONTRACTORS. SPECIFIC ATTENTION IS CALLED TO GENERAL LIGHTING AND MAIN SUPPLY AND RETURN DUCTWORK FROM MECHANICAL UNITS.
5. PROVIDE SHEET METAL HOODS OR SHIELDS TO PROTECT IMPORTANT ELECTRICAL EQUIPMENT FROM SPRINKLER DISCHARGE.
6. PROVIDE DRAIN VALVES AND PIPING TO ALLOW COMPLETE DRAINAGE OF ALL SPRINKLER SYSTEM PIPING.
7. PROVIDE ALARM WIRING FROM SPRINKLER VALVE TAMPER SWITCHES AND ALARM CHECK TO MAIN FIRE ALARM PANEL.
8. THERE IS NO FIRE SUPPRESSION SYSTEM WORK ASSOCIATED WITH OUTDOOR STORAGE STRUCTURES OR THE EXISTING BUILDING RENOVATION WORK.

FIRE PROTECTION CONTRACTOR IS SOLELY RESPONSIBLE FOR DESIGN AND CONSTRUCTION IN ACCORDANCE WITH ALL LOCAL, STATE, AND FEDERAL CODES AND REGULATIONS

ISSUED FOR BID JULY 19, 2023
NOT FOR CONSTRUCTION

McCARTHY ENGINEERING ASSOCIATES, INC.
www.McCarthy-Engineering.com
2500 East High Street, Suite 630
Pottstown, PA 19464
Phone: 610.373.8001

Project No. 230004

Revision	Date	Description	Rev.By
1	8/9/2023	ADDENDUM 1	

This document and all information and work product represented by and contained herein, is the sole and exclusive property of McCarthy Engineering Associates, Inc.. The information contained herein is licensed only for limited use by the intended recipient, and no license, permission or authority is extended, directly or implied, to any party without the express written permission of McCarthy Engineering Associates, Inc.
Copyright, 2017, McCarthy Engineering Associates, Inc. All rights reserved

McCARTHY ENGINEERING ASSOCIATES, INC.
555 Van Reed Road, Suite 2, Wyomissing, PA 19610
www.McCarthy-Engineering.com
Phone: 610.373.8001
2500 East High Street, Suite 630, Pottstown, PA 19464

SEAL:

FIRE SUPPRESSION
COVER SHEET
" PUBLIC WORKS FACILITY "

Client: WYOMISSING BOROUGH
Location: WYOMISSING BOROUGH, BERKS COUNTY, PENNSYLVANIA
Date: JULY 19, 2023

DRAWN BY:	PROJ. MANAGER:
EPG	NEC
PRINCIPAL:	SCALE:
JCM	AS NOTED

DRAWING NO. FP-0

PROJECT NO. 230004

McCARTHY
ENGINEERING ASSOCIATES, INC.
www.McCarthy-Engineering.com
2500 East High Street, Suite 630
Pottstown, PA 19464
Phone: 610.373.8001

Project No.
230004

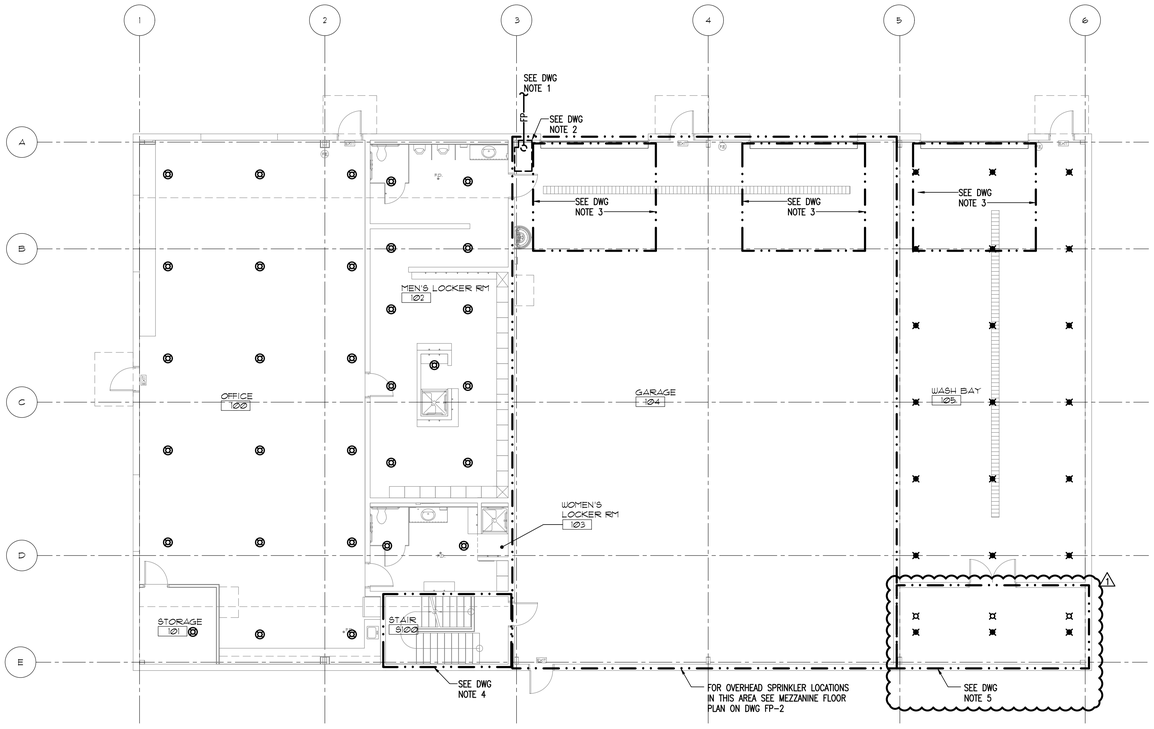

FIRE PROTECTION FIRST FLOOR PLAN
SCALE: 1/8" = 1'-0"

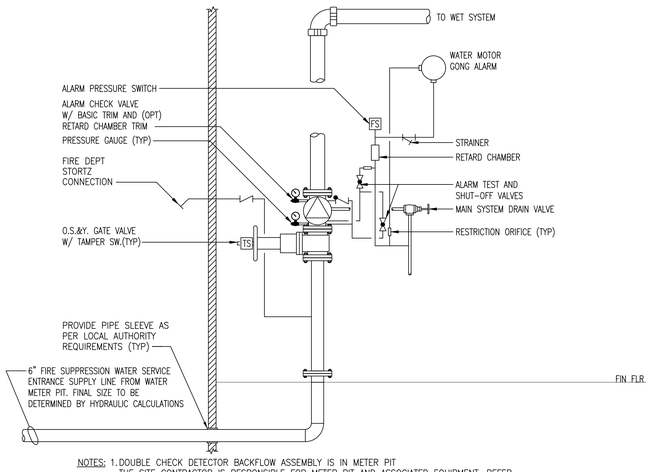

NOTES: 1. DOUBLE CHECK DETECTOR BACKFLOW ASSEMBLY IS IN METER PIT THE SITE CONTRACTOR IS RESPONSIBLE FOR METER PIT AND ASSOCIATED EQUIPMENT, REFER CIVIL SITE UTILITY DRAWINGS.

2. WIRE TAMPER SWITCHES AND FLOW ALARM PRESSURE SWITCH TO TO BUILDING FIRE ALARM SYSTEM.

FIRE SERVICE ENTRANCE & ALARM CHECK RISER VALVE DIAGRAM
NO SCALE

DRAWING NOTES:

1. FIRE SUPPRESSION SYSTEM WATER SUPPLY LINE, REFER TO CIVIL ENGINEERS SITE UTILITY PLANS. COORDINATE FIRE SUPPRESSION WATER SERVICE ENTRANCE SUPPLY LINE LOCATION WITH THE SITE CONTRACTOR.
2. FIRE SUPPRESSION SERVICE ENTRANCE EQUIPMENT, FOR PIPING AND VALVE ARRANGEMENT, SEE "FIRE SERVICE ENTRANCE AND ALARM CHECK RISER VALVE DIAGRAM" ON THIS DRAWING SEE PLUMBING DRAWING P-1 FOR BUILDING DOMESTIC WATER SERVICE SUPPLY LINE. COORDINATE LOCATION OF FIRE SUPPRESSION WATER SERVICE ENTRANCE EQUIPMENT WITH DOMESTIC SERVICE ENTRANCE EQUIPMENT.
3. PROVIDE SPRINKLERS WITH GUARDS FOR COVERAGE OF THE AREA BELOW GARAGE DOORS WHEN OVERHEAD DOOR IS IN THE OPEN POSITION.
4. PROVIDE SPRINKLERS AT TOP OF STAIR TOWER AND UNDER LANDING/SLOPING STAIR AT BOTTOM OF STAIR TOWER FOR COMPLETE COVERAGE OF STAIR TOWER.
5. PROVIDE SPRINKLERS WITH GUARDS FOR COVERAGE OF COMPRESSOR ROOM AND SPRINKLERS ABOVE PRE-CAST PLANK CEILING OF ROOM AS SHOWN.
6. SEE DRAWING FP-0 FOR GENERAL NOTES, LEGEND AND ABBREVIATIONS

FIRE PROTECTION CONTRACTOR IS SOLELY RESPONSIBLE FOR DESIGN AND CONSTRUCTION IN ACCORDANCE WITH ALL LOCAL, STATE, AND FEDERAL CODES AND REGULATIONS

ISSUED FOR BID JULY 19, 2023
NOT FOR CONSTRUCTION

Revision	Date	Description	Rev.By
1	8/9/2023	ADDENDUM 1	

This document and all information and work provided represented by and contained herein, is the sole and exclusive property of McCarthy Engineering Associates, Inc. and shall not be reproduced, published or used in any way without the express written permission of McCarthy Engineering Associates, Inc. Any unauthorized use, disclosure, sale or loaning, reproduction or publishing by any means, electronic, mechanical, photocopying, recording or otherwise, directly or indirectly, for any purpose without the express written permission of McCarthy Engineering Associates, Inc. is prohibited.
Copyright, 2011 McCarthy Engineering Associates, Inc. All rights reserved

McCARTHY
ENGINEERING ASSOCIATES, INC.
595 Van Reed Road
Suite 2
Wyomissing, PA 19610
www.McCarthy-Engineering.com
Phone: 610.373.8001
2500 East High Street
Suite 630
Pottstown, PA 19464

SEAL:

FIRE PROTECTION
FIRST FLOOR
" PUBLIC WORKS FACILITY "

Client: WYOMISSING BOROUGH
Location: WYOMISSING BOROUGH, BERKS COUNTY, PENNSYLVANIA
Date: JULY 19, 2023

DRAWN BY:	PROJ. MANAGER:
EPG	NEC
PRINCIPAL:	SCALE:
JCM	AS NOTED

DRAWING NO.
FP-1

PROJECT NO.
230004

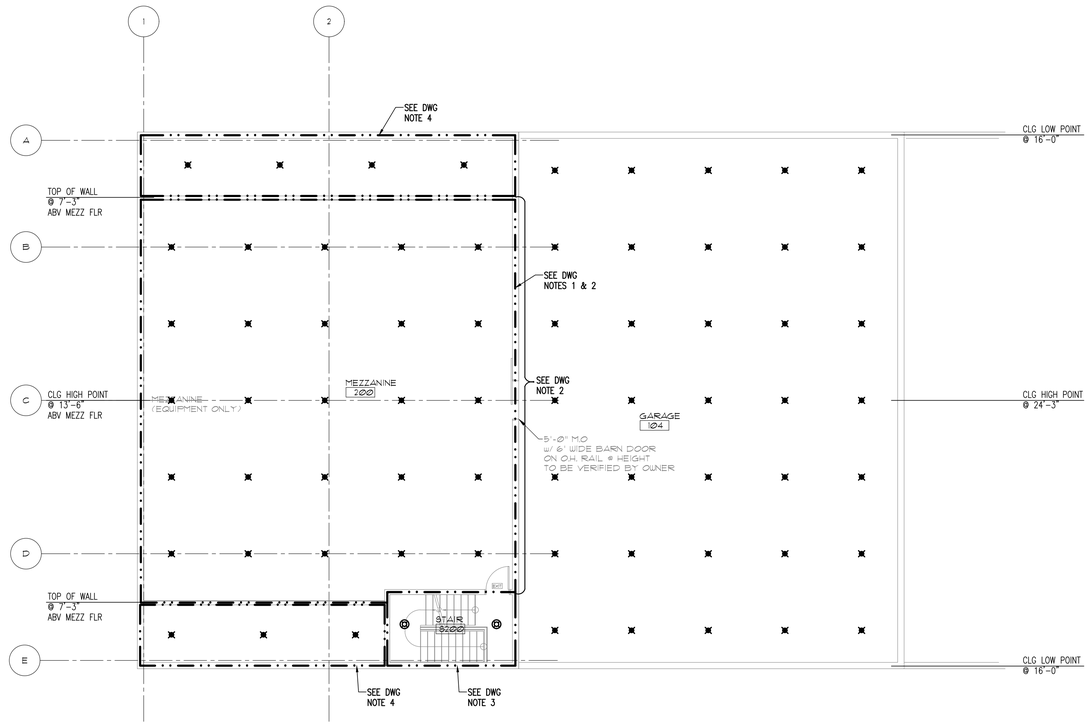

FIRE PROTECTION MEZZANINE AREA PLAN

SCALE: 1/8" = 1'-0"

DRAWING NOTES:

1. THE CEILING OF MEZZANINE (STORAGE) AREA SLOPES FROM HIGH POINT TO KNEE WALLS HEIGHTS AS INDICATED. RACKS IN THIS AREA CAN ACCOMMODATE STORAGE OF ITEMS UP TO 8'-0" ABOVE FINISH FLOOR. STORAGE OF ITEMS INCLUDES, BUT IS NOT LIMITED TO, BOXED MISCELLANEOUS SPARE PARTS, OIL FILTERS, SPARE TOOLS. PROVIDE PENDENT SPRINKLERS WITH GUARDS FOR COVERAGE THROUGHOUT STORAGE AREA.
2. MEZZANINE FLOOR (STORAGE) SPACE IS OPEN ALONG THIS AREA (RAILING WITH GATE OPENING) TO THE ADJACENT GARAGE AREA.
3. PROVIDE SPRINKLERS AT TOP OF STAIR TOWER AND UNDER LANDING/SLOPING STAIR AT BOTTOM OF STAIR TOWER FOR COMPLETE COVERAGE OF STAIR TOWER.
4. THIS AREA IS A CONCEALED SPACE AS FORMED BY KNEE WALL CONSTRUCTION TO DEFINE AREA OF STORAGE.
5. SEE DRAWING FP-0 FOR GENERAL NOTES, LEGEND AND ABBREVIATIONS.

FIRE PROTECTION CONTRACTOR IS SOLELY RESPONSIBLE FOR DESIGN AND CONSTRUCTION IN ACCORDANCE WITH ALL LOCAL, STATE, AND FEDERAL CODES AND REGULATIONS

ISSUED FOR BID JULY 19, 2023
NOT FOR CONSTRUCTION

McCARTHY ENGINEERING ASSOCIATES, INC.
www.McCarthy-Engineering.com
2500 East High Street, Suite 630
Pottstown, PA 19464
Phone: 610.373.8001

Project No.
230004

Revision	Date	Description	Rev.By
1	8/9/2023	ADDENDUM 1	

This document, and all information and work, provided / represented by and contained herein, is the sole and exclusive property of McCarthy Engineering Associates, Inc. and is not to be used, published, or disclosed to any person, firm or corporation not the recipient, and is not to be used, in whole or in part, for any purpose whatsoever, without the prior written consent, and if required, payment therefor, of McCarthy Engineering Associates, Inc. and is subject to return upon demand. Any unauthorized use, disclosure, and / or publication may be subject to civil and criminal penalties. Copyright, 2011 McCarthy Engineering Associates, Inc. All rights reserved.

McCARTHY ENGINEERING ASSOCIATES, INC.
595 Van Reed Road
Suite 2
Wyomissing, PA 19610
www.McCarthy-Engineering.com
Phone: 610.373.8001
2500 East High Street
Suite 630
Pottstown, PA 19464

SEAL:

FIRE PROTECTION MEZZANINE AREA
" PUBLIC WORKS FACILITY "

Client: WYOMISSING BOROUGH
Location: WYOMISSING BOROUGH, BERKS COUNTY, PENNSYLVANIA
Date: JULY 19, 2023

DRAWN BY:	PROJ. MANAGER:
EPG	NEC
PRINCIPAL:	SCALE:
JCM	AS NOTED

DRAWING NO.
FP-2

PROJECT NO.
230004