REVISIONS				
SYM	DESCRIPTION	REV BY	DATE	APPROVED
A	RELEASED	KDS	12/12/12	KS
B	0.550 WAS 0.525	KDS	01/10/13	KS

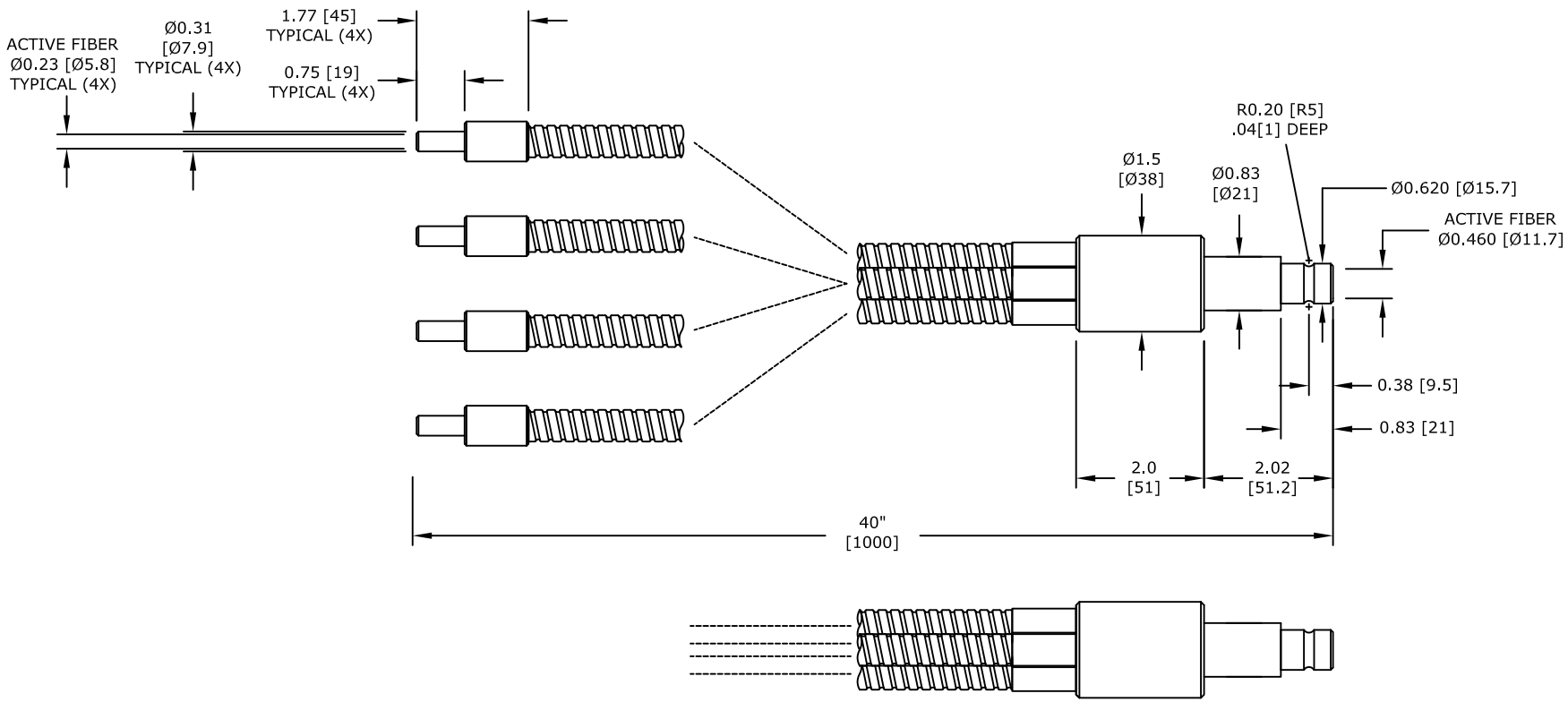

NOTES:

1) FIBER: GLASS, 50 MICRON, <0.7dB/m
2) FERRULE MATERIAL: STAINLESS STEEL, 303
3) SHEATH: STAINLESS STEEL, INTERLOCKING
4) UNIFORMITY: FIBER RANDOMIZED
5) FIBER POTTING: HIGH TEMP 500°C

UNLESS OTHERWISE INDICATED:
INTERPRET PER ANSI/ASME Y14.
DIMENSIONS ARE INCHES AND DO NOT INCLUDE APPLIED FINISHES.
BREAK SHARP EDGES & CORNERS .03/.01 RADIUS OR CHAMFER.
GENERAL TOLERANCES:
3 PLACE DIMENSIONS: ±.005
2 PLACE DIMENSIONS: ±.02
FRACTIONS: 1/64
ANGLES: ±1/2°
MACHINED SURFACES: 63√

APPLICABLE SPECIFICATIONS:

Illumination Technologies, Inc.
Syracuse, NY USA

THIRD ANGLE PROJECTION

DRAWN BY MM DATE 11/11/92
CHECKED BY DATE
APPROVED BY DATE

DRAWING TITLE: LIGHTGUIDE, 40", QUAD, HIGH TEMP
SIZE
DRAWING NUMBER: 9275HT
REV: B
REL DATE: 11/11/92
SCALE
SHEET 1/1 OF

THIS DRAWING AND ITS CONTENTS ARE THE EXCLUSIVE PROPERTY OF ILLUMINATION TECHNOLOGIES, INC. IT IS PROVIDED WITH THE UNDERSTANDING THAT THE INFORMATION CONTAINED HEREIN IS CONFIDENTIAL AND PROPRIETARY. NO REPRODUCTION OR OTHER USE OF THIS DOCUMENT IS ALLOWED WITHOUT WRITTEN PERMISSION OF ILLUMINATION TECHNOLOGIES, INC. OR ITS DULY AUTHORIZED AGENTS.