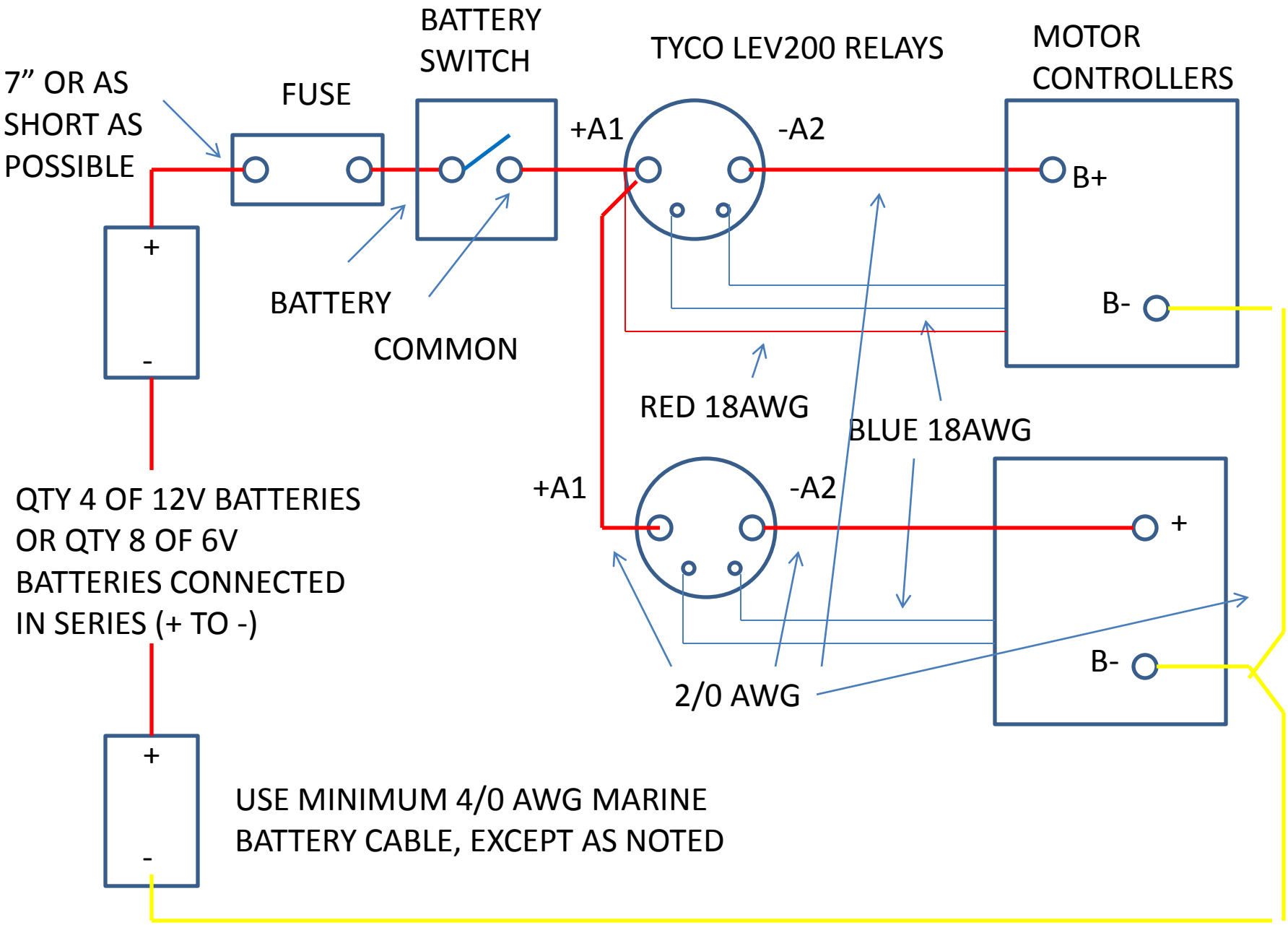
7” OR AS SHORT AS POSSIBLE
FUSE
BATTERY SWITCH
TYCO LEV200 RELAYS
MOTOR CONTROLLERS
+A1
-A2
B+
B-
+
-
BATTERY
COMMON
RED 18AWG
BLUE 18AWG
+A1
-A2
+
B-
2/0 AWG
QTY 4 OF 12V BATTERIES OR QTY 8 OF 6V BATTERIES CONNECTED IN SERIES (+ TO -)
+
-
USE MINIMUM 4/0 AWG MARINE BATTERY CABLE, EXCEPT AS NOTED