GENERAL CATALOGUE

Lathe tool holder
ultimate craftsmanship

The combination of quality & efficiency ,
the challenge of precision & speed

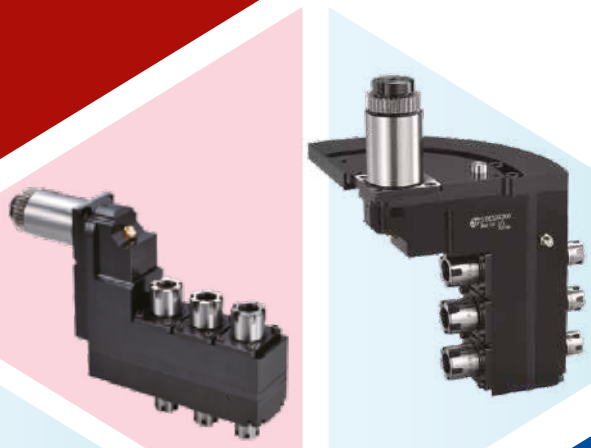

TOOL HOLDERS FOR CNC LATHES

LIVE TOOLS

SPARE PARTS FOR BAR FEEDERS

CONTENTS

STAR

ECAS, SB, SR, SW

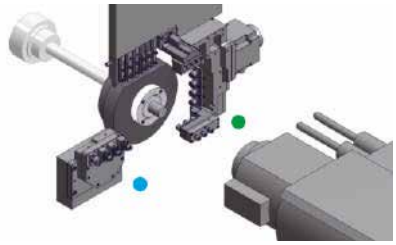

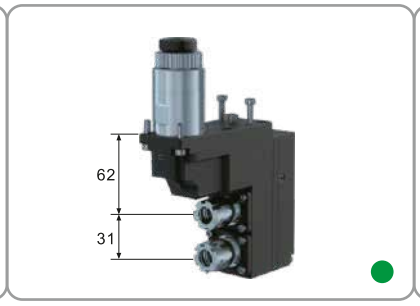

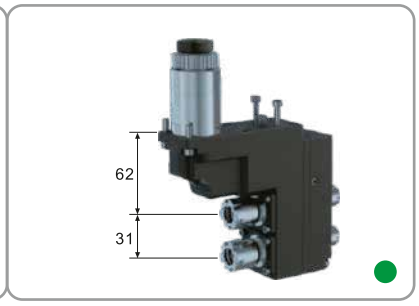

	Drilling/milling unit	2-spindle drilling/milling unit	2-spindle double drilling/milling unit
Product No.	STRA2A1203	STRA2A2204	STRA2B2202
Ref. No.	57151	54151	66159
Speed ratio	1:1	1:1	1:1
RPM Max.	6000	6000	6000
Tool clamping	ER16M	ER16M	ER16M/ER11M

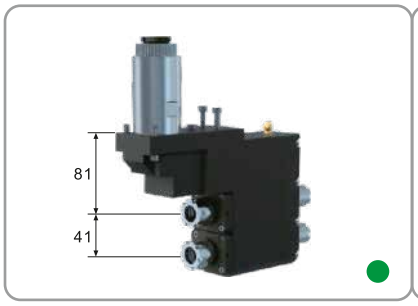

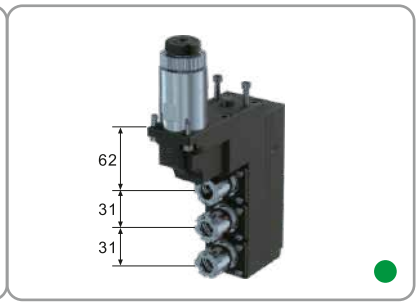

	2-spindle double drilling/milling unit	3-spindle drilling/milling unit	3-spindle drilling/milling unit
Product No.	STRA2B2302	STRA2A3204	STRA2A3201
Ref. No.	10169	–	66151
Speed ratio	1:1	1:1	1:1
RPM Max.	5000	6000	6000
Tool clamping	ER20M/ER16M	ER16M	ER16M

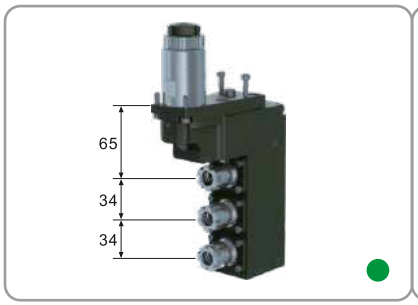

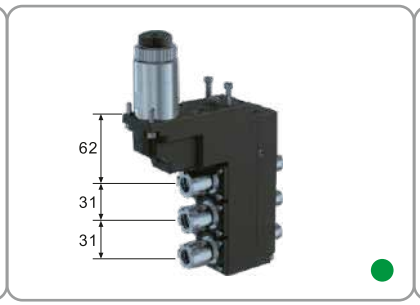

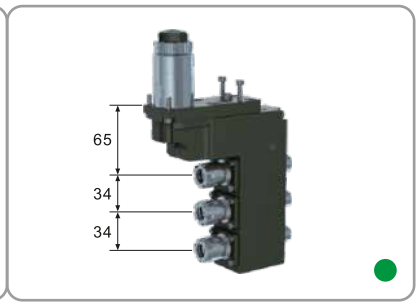

	3-spindle drilling/milling unit	3-spindle double drilling/milling unit	3-spindle double drilling/milling unit
Product No.	STRA2A3301	STRA2B3201	STRA2B3301
Ref. No.	67151	67161	67159
Speed ratio	1:1	1:1	1:1
RPM Max.	6000	6000	6000
Tool clamping	ER16M	ER16M/ER11M	ER16M/ER11M

IC Internal Coolant BAR · Speeder · Reducer · Adjustable

STAR

ECAS, SB, SR, SW

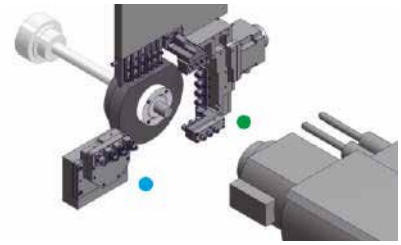

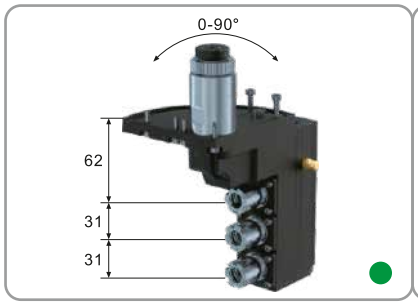

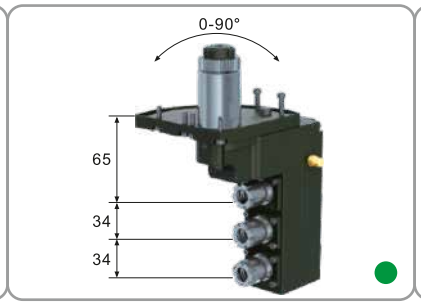

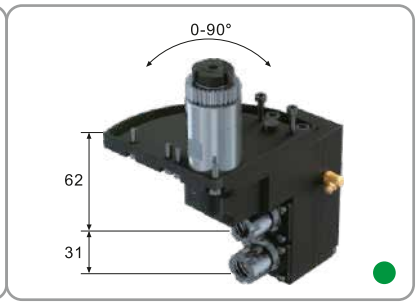

	3-spindle drilling/milling unit	3-spindle drilling/milling unit	2-spindle drilling/milling unit
Product No.	STRA2A3202	STRA2A3302	STRA2A2202
Ref. No.	–	–	–
Speed ratio	1:1	1:1	1:1
RPM Max.	6000	6000	6000
Tool clamping	ER16M	ER16M	ER16M

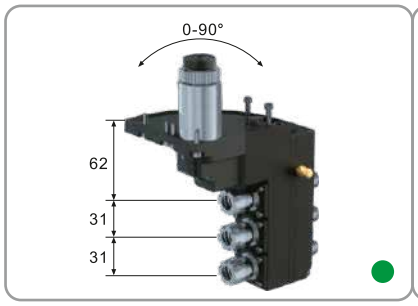

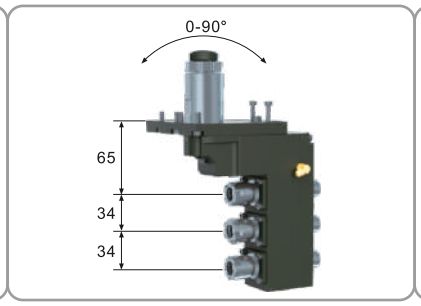

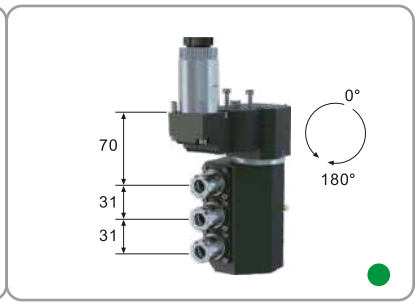

	3-spindle double drilling/milling unit	3-spindle double drilling/milling unit	3-spindle drilling/milling unit
Product No.	STRA2B3202	STRA2B3302	STRA2A3207
Ref. No.	–	–	–
Speed ratio	1:1	1:1	1:1
RPM Max.	6000	6000	6000
Tool clamping	ER16M/ER11M	ER16M/ER11M	ER16M

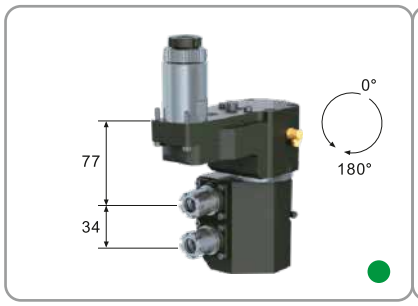

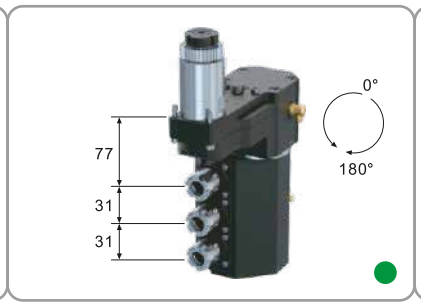

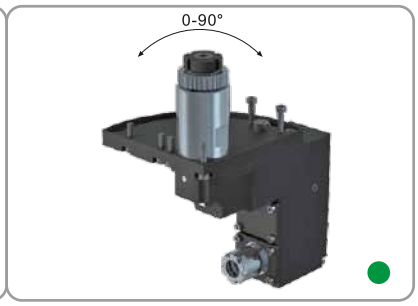

	2-spindle drilling/milling unit	3-spindle drilling/milling unit	Drilling/milling unit, Angle adj. 0~90°
Product No.	STRA2A2303	STRA2A3203	STRA2A1205
Ref. No.	–	–	–
Speed ratio	1:1	1:1	1:1
RPM Max.	6000	6000	6000
Tool clamping	ER16M	ER16M	ER16M

IC Internal Coolant BAR · Speeder · Reducer · Adjustable

STAR

ECAS, SB, SR, SW

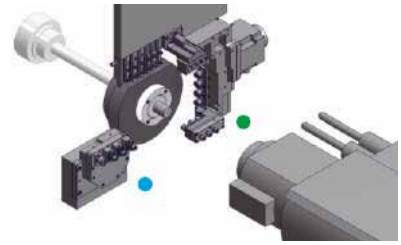


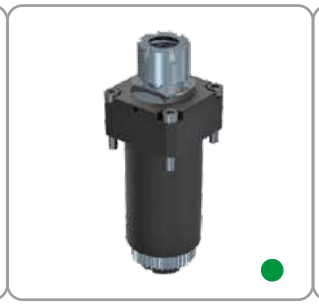

	Axial drilling/milling unit	Cross drilling/milling unit	Cross drilling/milling unit	Cross drilling/milling unit
Product No.	STRA116204	STRA120301	STRA116201	STRA116202 / STRA120201
Ref. No.	–	10168	57155	33150
Speed ratio	1:1	1:1	1:1	1:1
RPM Max.	6000	6000	8000	8000
Tool clamping	Ø 10.5/M10x1.5	ER20M	ER16M	ER16M / ER20M



	Cross drilling/milling unit	Cross drilling/milling unit, 3-spindle	Slotting unit
Product No.	STRA111202	STRA111201	STRA712201/STRA706201/STRA713201
Ref. No.	–	–	54153
Speed ratio	1:3 ⬆	1:1	1:0.374 ⬇
RPM Max.	18000	8000	4000
Tool clamping	ER11A	ER11M	Ø6/Ø12.7/Ø13xØ50


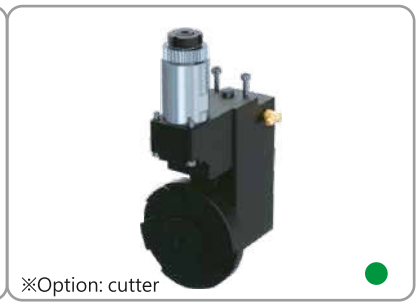

	Slotting unit	Thread whirling unit ⬍	Polygon unit
Product No.	STRA713202	STRA545203	STRA400201
Ref. No.	–	68172	54191
Speed ratio	1:0.375	1:1	1:1
RPM Max.	4000	6000	3000
Tool clamping	Ø13xØ50	Utilis no.119287	–

IC Internal Coolant BAR · Speeder · Reducer · Adjustable

STAR

ECAS, SB, SR, SW

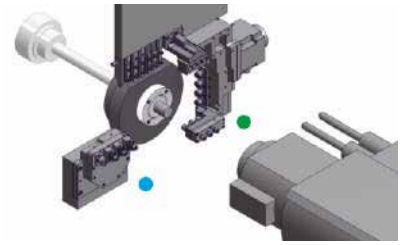

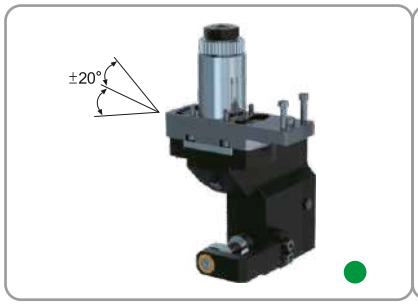

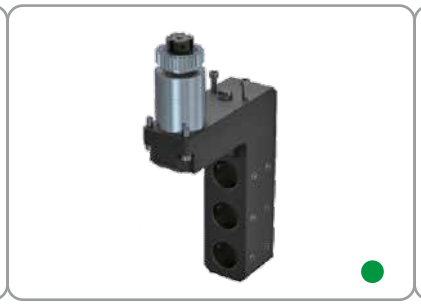

	Gear hobbing unit	Boring bar holder	Boring bar holder
Product No.	STRA613201 /STRA610201	STRA803309	STRA803307
Ref. No.	–	–	–
Speed ratio	1:1	–	–
RPM Max.	6000	–	–
Tool clamping	Ø13xØ30x20/Ø10	Ø22	Ø22

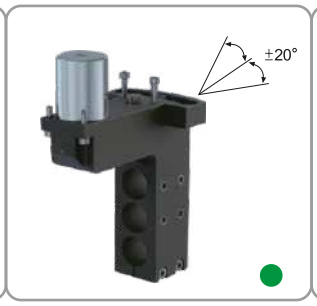

	Idler shaft	Air tool holder	Air tool holder	Air tool holder for sub spindle
Product No.	STRA100000	STRA0002	STBA0004	STRB0003
Ref. No.	57189	–	–	–
Speed ratio	–	–	–	–
RPM Max.	–	–	–	–
Tool clamping	–	Ø22	Ø22	Ø20

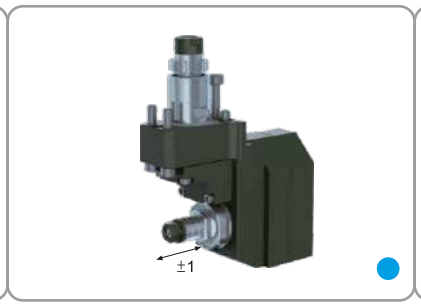

	Air tool holder for sub spindle	Slotting unit for sub spindle	Slotting unit for sub spindle
Product No.	STRB0001	STRB700201	STRB700202
Ref. No.	–	69166/69165	0R165
Speed ratio	–	1:0.55	1:0.55
RPM Max.	–	4000	4000
Tool clamping	Ø22.8	Ø5/6/8/10/12.7/13xØ50	Ø5/6/8/10/12.7/13xØ50

IC Internal Coolant BAR · Speeder · Reducer · Adjustable

STAR

ECAS, SB, SR, SW

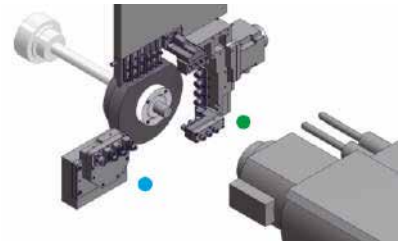

	Drilling/milling unit for sub spindle	Drilling/milling unit for sub spindle
Product No.	STRB116205	STRB111208
Ref. No.	–	54161
Speed ratio	1:1	1:1
RPM Max.	8000	6000
Tool clamping	M6X1	ER11M

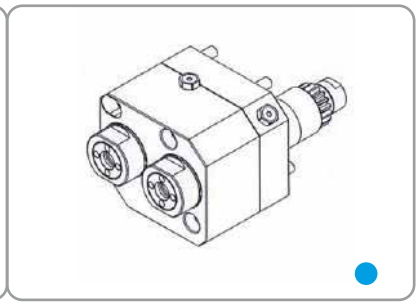

	Drilling/milling unit for sub spindle	Drilling/milling unit for sub spindle	Drilling/milling unit for sub spindle
Product No.	STRB116202/STRB116203	STRB116201	STRB111209
Ref. No.	57161	0R161	–
Speed ratio	1:1	1:1	1:3 ⬆
RPM Max.	6000	6000	18000
Tool clamping	ER16M/ER16A	ER16M	ER11

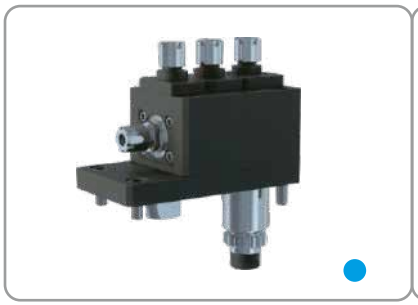

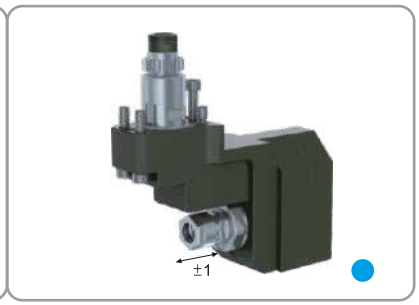

	Drilling/milling unit for sub spindle, 3-spindle	Drilling/milling unit for sub spindle, 3-spindle	Cross drilling/milling unit for sub spindle ⬍
Product No.	STRB108101	STRB111201	STRB311201
Ref. No.	–	0E151	–
Speed ratio	1:1	1:1	1:0.55 ⬇
RPM Max.	8000	8000	4000
Tool clamping	ER8M	ER11M	ER11A

IC Internal Coolant BAR · Speeder · Reducer · Adjustable

STAR

ECAS, SB, SR, SW

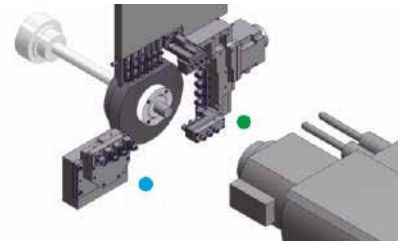

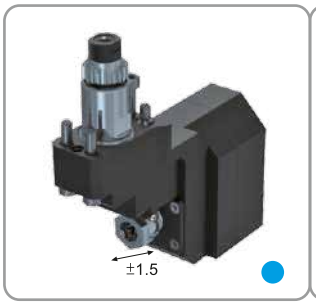

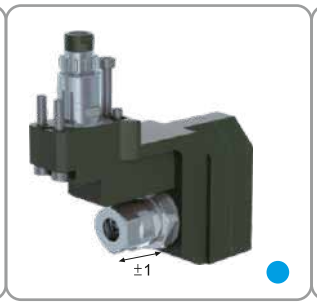

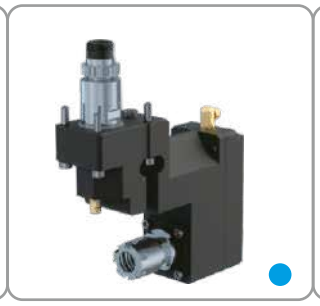

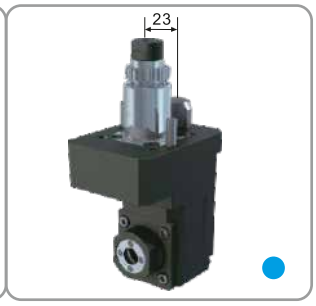

	Cross drilling/milling unit for sub spindle	Cross drilling/milling unit for sub spindle	Cross drilling/milling unit for sub spindle	Cross drilling/milling unit for sub spindle
Product No.	STRB311205	STRB316202	STRB316201	STRB311101
Ref. No.	–	–	0R151	–
Speed ratio	1:0.55	1:0.77	1:1	1:1
RPM Max.	4000	4000	6000	6000
Tool clamping	ER11A	ER16A	ER16M	ER11(內螺帽)

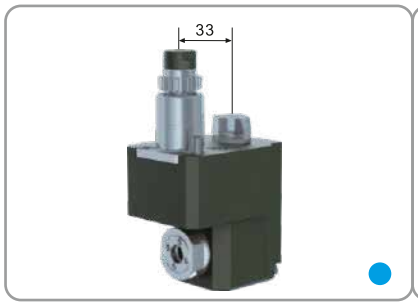

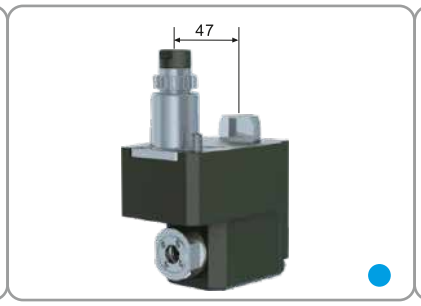

	Cross drilling/milling unit for sub spindle	Cross drilling/milling unit for sub spindle	Cross drilling/milling unit for sub spindle
Product No.	STRB311204	STRB311301	STRB311203
Ref. No.	–	–	0E152
Speed ratio	1:1	1:1	1:1
RPM Max.	6000	6000	8000
Tool clamping	ER11	ER11	ER11M

	Drilling/milling unit for sub spindle	Drilling/milling unit for sub spindle	Drilling/milling unit for sub spindle
Product No.	STRB111203	STBB111201	STRB111301
Ref. No.	–	–	–
Speed ratio	1:1	1:1	1:1
RPM Max.	8000	8000	8000
Tool clamping	ER11(內螺帽)	ER11M	ER11

IC Internal Coolant BAR Speeder Reducer Adjustable

ECAS, SB, SR

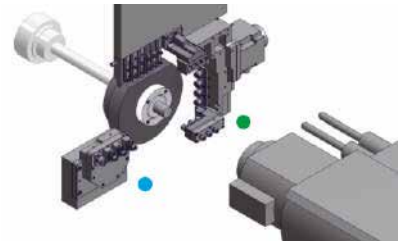

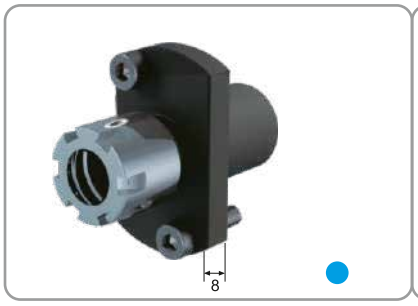

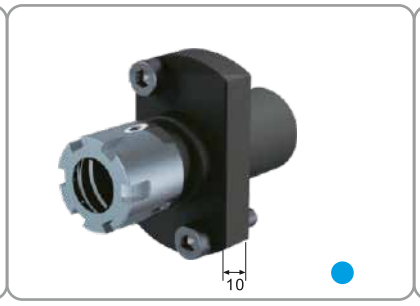

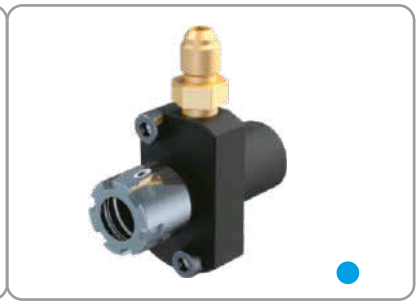

	Drill holder for sub spindle	Drill holder for sub spindle	Drill holder for sub spindle IC 25bar
Product No.	STRB81Q309	STRB81Q307	STRB81Q304
Ref. No.	–	54121	–
Speed ratio	–	–	–
RPM Max.	–	–	–
Tool clamping	ER16M	ER16M	ER16M

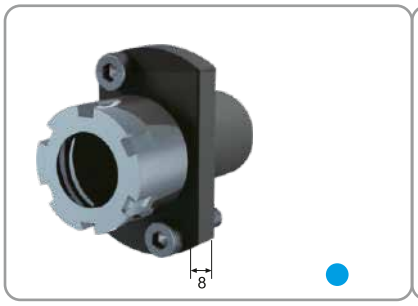

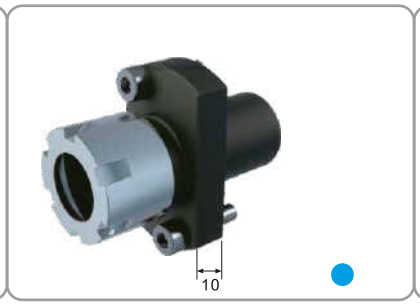

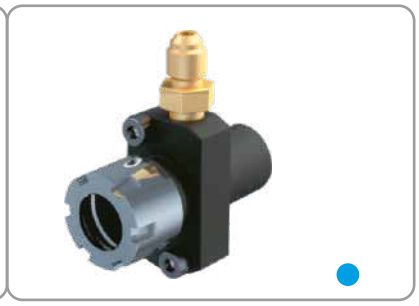

	Drill holder for sub spindle	Drill holder for sub spindle	Drill holder for sub spindle IC 25bar
Product No.	STRB81Q305	STRB81Q313	STRB81Q303
Ref. No.	–	67122	–
Speed ratio	–	–	–
RPM Max.	–	–	–
Tool clamping	ER20M	ER20M	ER20M

	Drill holder for sub spindle IC 25bar	Drill holder for sub spindle
Product No.	STRB81E202	STRB81S301
Ref. No.	0R123	10119
Speed ratio	–	–
RPM Max.	–	–
Tool clamping	ER16M	ER20M

IC Internal Coolant BAR · Speeder · Reducer · Adjustable

ECAS, SB, SR

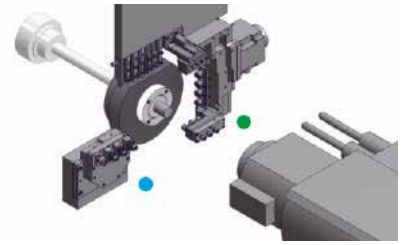

	Drill holder for sub spindle	Drill holder for sub spindle
Product No.	STRB81Q101	STRB81Q201
Ref. No.	69125	–
Speed ratio	–	–
RPM Max.	–	–
Tool clamping	ER11M	ER11M

※ER drill holder not included

※ER drill holder not included

	Drill holder for sub spindle	Drill holder for sub spindle
Product No.	STRB82Q201	STRB82Q202
Ref. No.	–	–
Speed ratio	–	–
RPM Max.	–	–
Tool clamping	Ø16	Ø16

	Boring bar holder for sub spindle	Boring bar holder for sub spindle	Boring bar holder for sub spindle IC 25bar
Product No.	STRB82Q200	STRBA22000+COMBAB0000	STRB82E200
Ref. No.	–	–	–
Speed ratio	–	–	–
RPM Max.	–	–	–
Tool clamping	Ø3/4/5/6/8/9/10/12/16	Ø3/4/5/6/8/9/10/12/16	Ø6/8/9/10/12/16

IC InteralCoolant BAR · Speeder · Reducer · Adjustable

ECAS, SB, SR

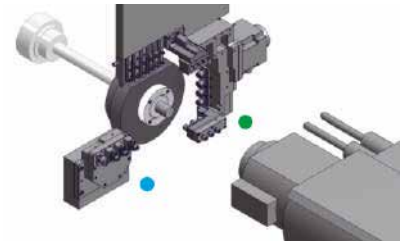

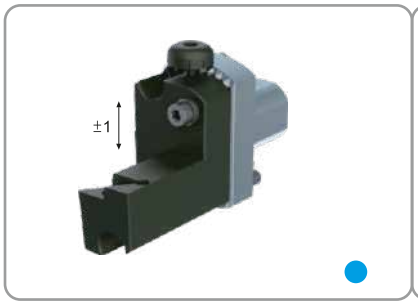

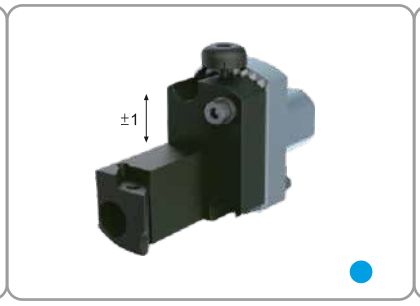

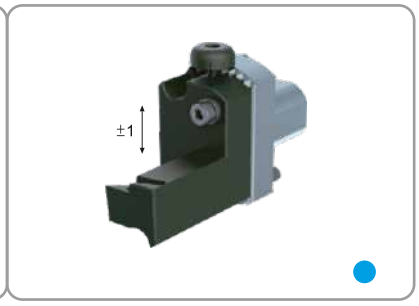

	Turning holder for sub spindle	Turning holder for sub spindle	Turning holder for sub spindle
Product No.	STRBA22000+COMBADL550	STRBA22000+COMBADR550	STRBA22000+COMBADL350
Ref. No.	–	–	–
Speed ratio	–	–	–
RPM Max.	–	–	–
Tool clamping	DC.T11T3	DC.T11T3	VC.T1103

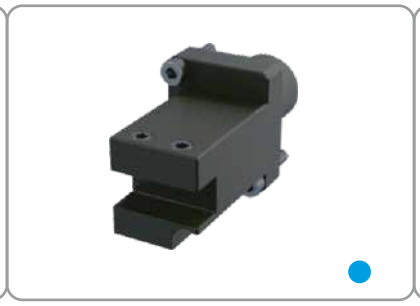

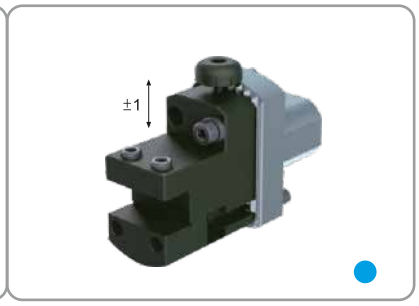

	Turning holder for sub spindle	Turning holder for sub spindle	Turning holder for sub spindle
Product No.	STRB912201	STRB910202	STRBA22000+COMBAC1000
Ref. No.	–	–	–
Speed ratio	–	–	–
RPM Max.	–	–	–
Tool clamping	Ø12	□10	□10

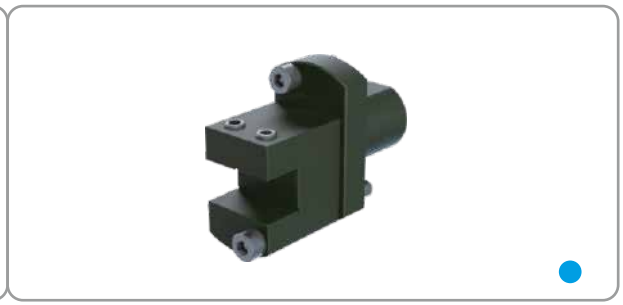

	Turning holder for sub spindle	Turning holder for sub spindle
Product No.	STRB910201	STRB912204
Ref. No.	–	–
Speed ratio	–	–
RPM Max.	–	–
Tool clamping	□10	□12

IC Internal Coolant BAR · Speeder · Reducer · Adjustable

STAR

SV32JII, SV12, SV20, ECAS20T

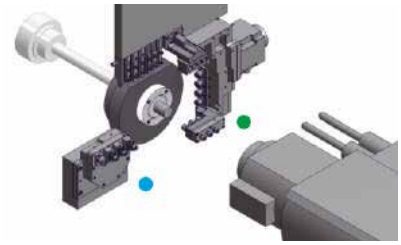

	Axial drilling/milling unit	Axial drilling/milling unit	2 spindle axial drilling/milling unit	Universal drilling/milling unit
Product No.	STVC120201	STVC116201	STVC116202	STVC2A1201
Ref. No.	22150	22150	42151	42155
Speed ratio	1:1	1:1	1:1	1:1
RPM Max.	6000	6000	6000	6000
Tool clamping	ER20A	ER16A	ER16A	ER11A

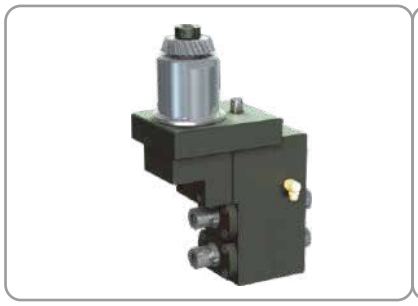

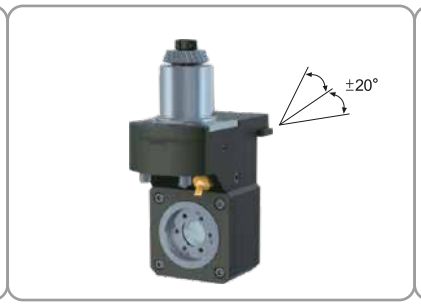


※Longitudinally adj. ±1mm

	Radial drilling/milling unit	Thread whirling unit	Turning holder
Product No.	STVC2B2201	STVC545201	STVC916201
Ref. No.	42159	–	–
Speed ratio	1:1.16	1:1	–
RPM Max.	6000	6000	–
Tool clamping	ER11M	Utilis no.119287	□16

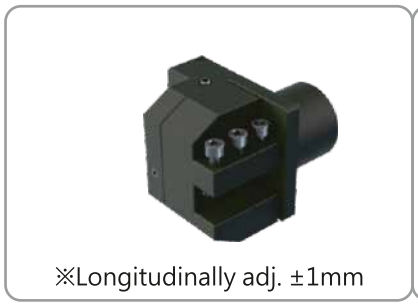
※Longitudinally adj. ±1mm

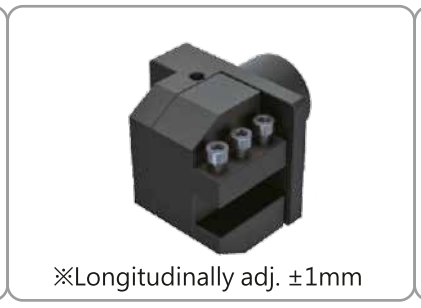
※Longitudinally adj. ±1mm


※Longitudinally adj. ±1mm

	Turning holder	Turning holder for sub spindle	Turning holder for sub spindle
Product No.	STVC916202	STVC916205	STVC916206
Ref. No.	–	–	–
Speed ratio	–	–	–
RPM Max.	–	–	–
Tool clamping	□16	□16	□16

IC InteralCoolant BAR · Speeder · Reducer · Adjustable

SV32JII, SV12, SV20, ECAS20T

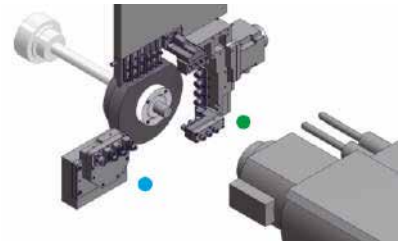


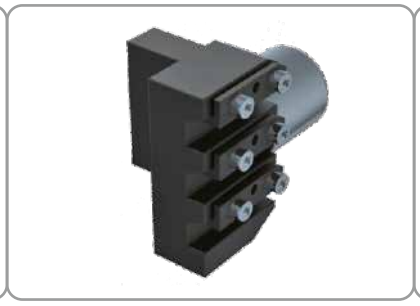
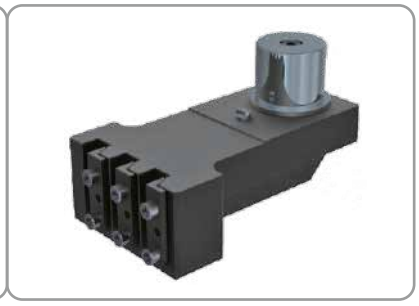

	2-Station turning holder Ø16	3-Station turning holder Ø12	3-Station turning holder for sub spindle Ø12
Product No.	STVC916204	STVC912201	STVC912202
Ref. No.	–	42102	42103
Speed ratio	–	–	–
RPM Max.	–	–	–
Tool clamping	☐16	☐ 12	☐ 12




	Boring bar holder	Boring bar holder	Boring bar holder	Boring bar holder
Product No.	STVC801204	STVC801206	STVC801201	STVC801202
Ref. No.	–	58113	–	–
Speed ratio	–	–	–	–
RPM Max.	–	–	–	–
Tool clamping	Ø32	Ø32	Ø32	Ø32

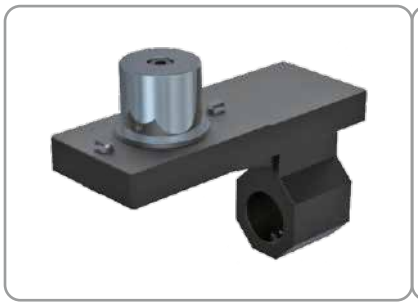
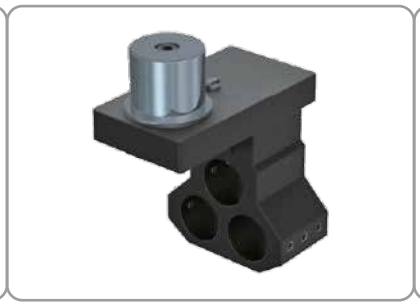


	Boring bar holder	Boring bar holder	Boring bar holder
Product No.	STVC801205	STVC803202	STVC803203
Ref. No.	–	42111	–
Speed ratio	–	–	–
RPM Max.	–	–	–
Tool clamping	Ø32	Ø32	Ø22

IC Internal Coolant BAR · Speeder · Reducer · Adjustable

STAR

SV32, ECAS32T, SV-38R

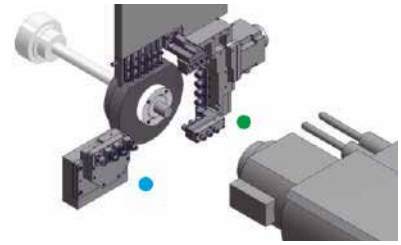



	Axial drilling/milling unit	Axial drilling/milling unit	Axial drilling/milling unit
Product No.	STVC120301	STVC116302	STVC125301
Ref. No.	58151	–	43161
Speed ratio	1:1	1:1	1:1
RPM Max.	6000	6000	6000
Tool clamping	ER20A	ER16A	ER25-UM



	Axial drilling/milling unit	Axial drilling/milling unit	Radial drilling/milling unit
Product No.	STVC111301	STVC116301	STVC2B2301
Ref. No.	431-52-00	43151	–
Speed ratio	1:1.67	1:1	1:1.16 ⬆
RPM Max.	6000	6000	6000
Tool clamping	ER11A	ER16A	ER11M

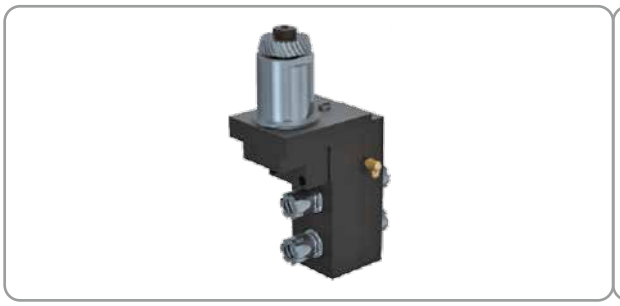
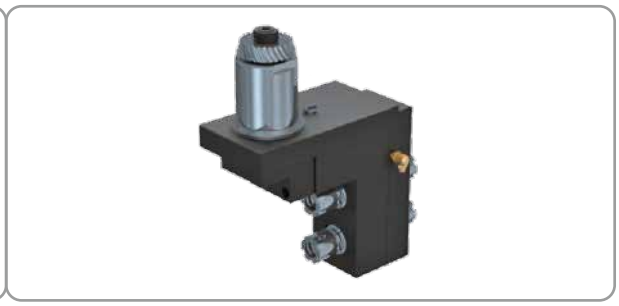

	Radial drilling/milling unit	Radial drilling/milling unit
Product No.	STVC2B2303	STVC2B2304
Ref. No.	43159	43159-B
Speed ratio	1:1	1:1
RPM Max.	6000	6000
Tool clamping	ER16M	ER16M

IC InteralCoolant BAR · Speeder · Reducer · Adjustable

SV32, ECAS32T, SV-38R

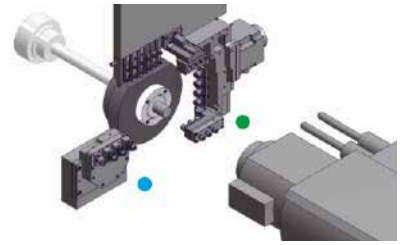

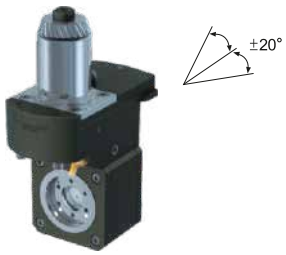

※Longitudinally adj. ±1mm

	Thread whirling unit	Turning holder for sub spindle Ø16
Product No.	STVC545301	STVC916301
Ref. No.	–	–
Speed ratio	1:1	–
RPM Max.	6000	–
Tool clamping	Utilis no.119287	□16

※Longitudinally adj. ±1mm

※Longitudinally adj. ±1mm

	Turning holder for sub spindle Ø16	Turning holer for sub spindle
Product No.	STVC920301	STVC916302
Ref. No.	78171	–
Speed ratio	–	–
RPM Max.	–	–
Tool clamping	□20	□16

	2 spindle radial drilling/milling unit	2 spindle radial drilling/milling unit
Product No.	STVC2A2301	STVC2B1302
Ref. No.	–	–
Speed ratio	1:1	1:1
RPM Max.	6000	6000
Tool clamping	ER20M	ER16A

BO205

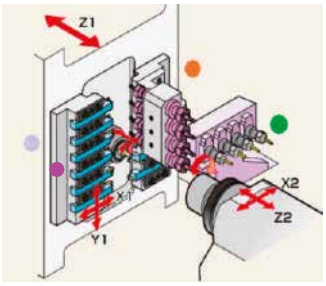

	Thread whirling unit	Tool holder	Cross drilling/milling unit for sub spindle
Product No.	TSBA545201	TSBA0001	TSBB311201
Ref. No.	–	3220-T520	3220-Y7074
Speed ratio	1:1	–	1:1
RPM Max.	8000	–	8000
Tool clamping	Utilis no.119287	Ø20	ER11A

	Drilling/milling unit for sub spindle	Drill holder for sub spindle	Drill holder for sub spindle
Product No.	TSBB116201	TSBB81Q202	TSBB82Q201
Ref. No.	3220-Y7072	–	3220-Y7073
Speed ratio	1:1	–	–
RPM Max.	8000	–	–
Tool clamping	ER16M	ER11A	Ø20

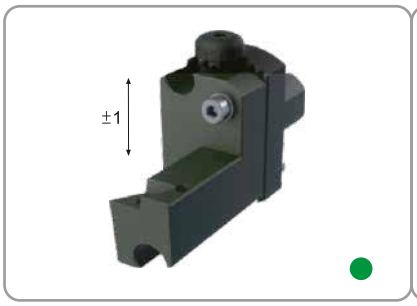

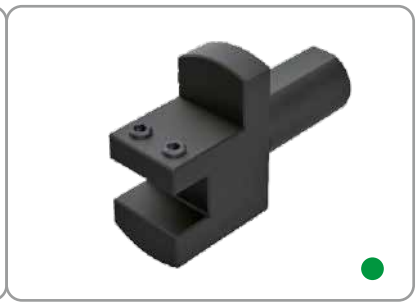

	Turning holder for sub spindle	Air tool holder for sub spindle	Turning holder for sub spindle
Product No.	TSBBA20000+COMBADL550	TSBB0001	TSBB912201
Ref. No.	–	–	–
Speed ratio	–	–	–
RPM Max.	–	–	–
Tool clamping	DC.T11T3	NR-303	□ 12

IC InteralCoolant BAR · Speeder · Reducer · Adjustable

TSUGAMI

BO265, BO266, BO325, BO326, BO385

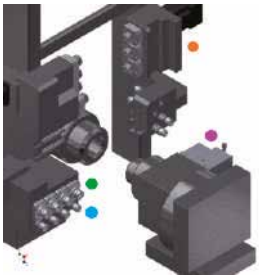

	Cross drilling/milling unit	Cross drilling/milling unit	Cross drilling/milling unit
Product No.	TSBA116301	TSBA120301	TSBA111301
Ref. No.	3268-T051	3268-T051-ER20	3290-Y670
Speed ratio	1:1	1:1	1:2
RPM Max.	6000	6000	12000
Tool clamping	ER16A	ER20A	ER11A

	Cross drilling/milling unit	Cross drilling/milling unit, 2-spindle	Thread whirling unit
Product No.	TSBA116303	TSBA116304	TSBA545301
Ref. No.	–	–	3268-Y450
Speed ratio	1:1	1:1	1:1
RPM Max.	6000	6000	5000
Tool clamping	ER16A	ER16A	Utilis no.119287

	Drilling unit (deep hole)	2-spindle drilling/milling unit	2-spindle double drilling/milling unit
Product No.	TSBA116302	TSBA2A2304	TSBA2B2303
Ref. No.	3290-Y010	–	3282-Y901
Speed ratio	1:1	1:1	1:1
RPM Max.	8000	6000	6000
Tool clamping	ER16A	ER16AM	ER16AM

IC Internal Coolant BAR · Speeder · Reducer · Adjustable

TSUGAMI

BO265, BO266, BO325, BO326, BO385

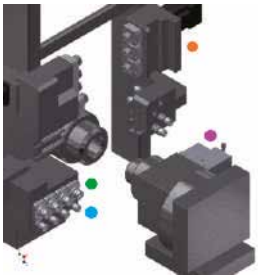

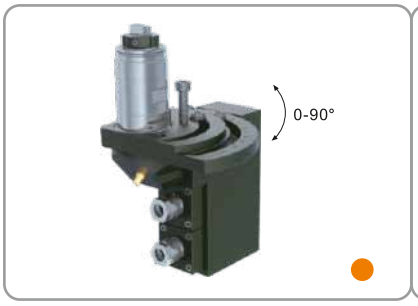

	2-spindle drilling/milling unit	2-spindle double drilling/milling unit	Drilling/milling unit
Product No.	TSBA2A2301	TSBA2B2302	TSBA2A1301
Ref. No.	–	3282-Y921	–
Speed ratio	1:1	1:1	1:1
RPM Max.	6000	6000	6000
Tool clamping	ER16AM	ER16AM	ER16AM

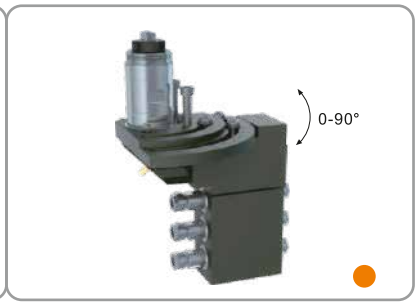

	3-spindle drilling/milling unit	3-spindle double drilling/milling unit	3-spindle double drilling/milling unit
Product No.	TSBA2A3301	TSBA2B3302	TSBA2B3301
Ref. No.	–	–	–
Speed ratio	1:1	1:1	1:1
RPM Max.	5000	6000	6000
Tool clamping	ER16AM	ER11A	ER11A

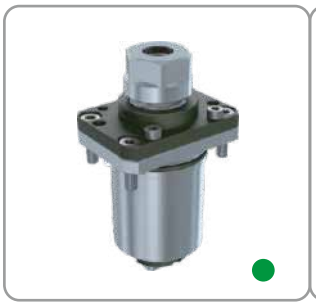

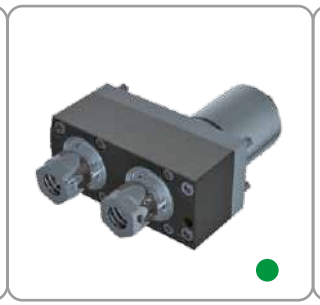

	Drilling/milling unit for sub spindle	Drilling/milling unit for sub spindle	2-spindle drillingmilling unit for sub spindle	Cross drilling/milling unit for sub spindle
Product No.	TSBB116301	TSBB111301	TSBB116302	TSBB316301
Ref. No.	3282-Y041	3290-Y680	–	3290-Y041
Speed ratio	1:1	1:2	1:1	1:1
RPM Max.	6000	12000	6000	6000
Tool clamping	ER16A	ER11A	ER16AM	ER16M

IC Internal Coolant BAR · Speeder · Reducer · Adjustable

TSUGAMI

BO265, BO266, BO325, BO326, BO385

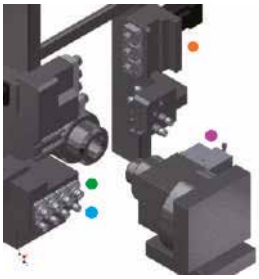

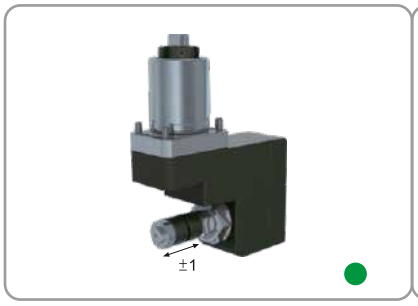

	Slotting unit for sub spindle	Drill holder for sub spindle IC 25bar	Drill holder for sub spindle
Product No.	TSBB712301	TSBB82Q304	TSBB82Q303
Ref. No.	–	3282-Y211	–
Speed ratio	1:1	–	–
RPM Max.	3000	–	–
Tool clamping	鋸片 Ø12.7xØ70	Ø25	Ø25

	Drill holder for sub spindle	Drill holder for sub spindle IC 25bar	Boring bar holder
Product No.	TSBB82Q302	TSBB81Q301	TSBA802301
Ref. No.	–	–	–
Speed ratio	–	–	–
RPM Max.	–	–	–
Tool clamping	Ø25	ER20M	Ø25

	Turning holder for sub spindle	Turning holder for sub spindle	Turning holder for sub spindle	Boring bar holder for sub spindle
Product No.	TSBB912301	TSBB910301	TSBB912302	TSBBA42000+COMBAB0000
Ref. No.	–	–	–	–
Speed ratio	–	–	–	–
RPM Max.	–	–	–	–
Tool clamping	□12	□10	□12	Ø3/4/5/6/8/9/10/12/16

IC Internal Coolant BAR · Speeder · Reducer · Adjustable

TSUGAMI

S205, S206

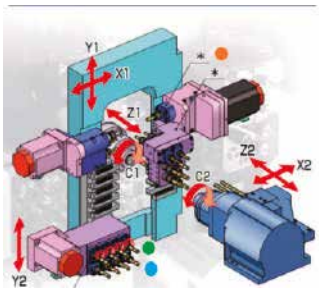

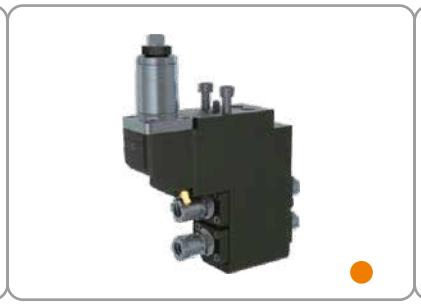

	Cross drilling/milling unit	2-spindle double drilling/milling unit	Thread whirling unit
Product No.	TSSA116201	TSSA2B2201	TSSA545201
Ref. No.	3281-T050	3281-Y240	3281-Y450
Speed ratio	1:1	1:1	1:1
RPM Max.	8000	8000	5000
Tool clamping	ER16M	ER16M/ER11A	Utilis no.119287

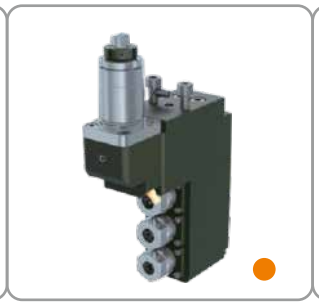

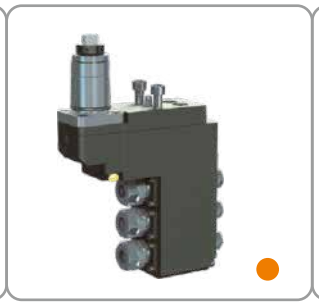

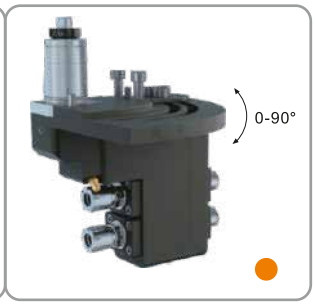

	3-spindle drilling/milling unit	3-spindle drilling/milling unit	3-spindle double drilling/ milling unit	2-spindle double drilling/ milling unit
Product No.	TSSA2A3201	TSSA2A3202	TSSA2B3201/ TSSA2B3204	TSSA2B2202
Ref. No.	–	–	–	3281-Y280
Speed ratio	1:1	1:1	1:1	1:1
RPM Max.	8000	8000	8000	8000
Tool clamping	ER11A	ER16A	ER16A/ER11A/ER16M/ER11M	ER16M/ER11A

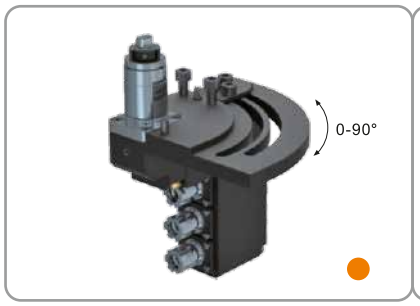

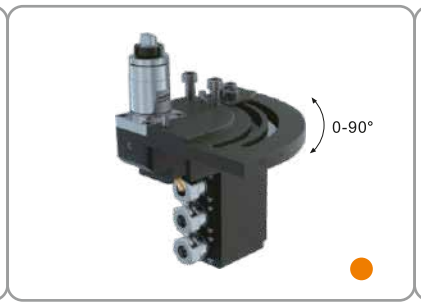

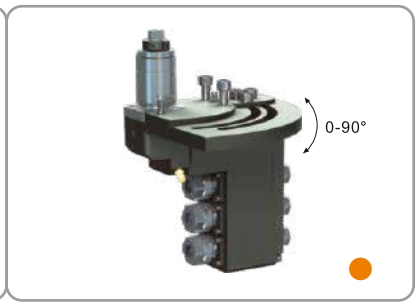

	3-spindle double drilling/milling unit	3-spindle drilling/milling unit	3-spindle double drilling/milling unit
Product No.	TSSA2B3205	TSSA2A3203	TSSA2B3202
Ref. No.	3281-274001-0100	–	–
Speed ratio	1:1	1:1	1:1
RPM Max.	8000	8000	8000
Tool clamping	ER16M/ ER11M	ER16A	ER16A/ER11A

IC InteralCodant BAR · Speeder · Reducer · Adjustable

TSUGAMI

S205, S206

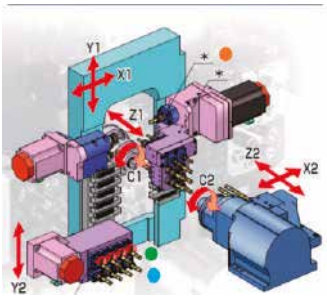

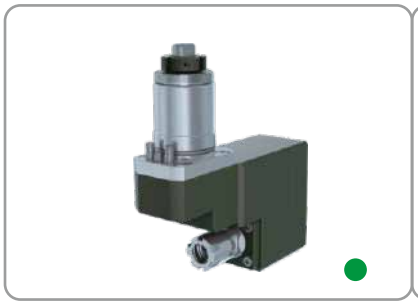

	Cross drilling/milling unit for sub spindle	Drilling/milling unit for sub spindle	Drill holder for sub spindle
Product No.	TSSB316201	TSSB116201	TSSB82Q202 / TSSB82Q205
Ref. No.	3281-Y460	3281-S080	3281-S060
Speed ratio	1:1	1:1	–
RPM Max.	6000	8000	–
Tool clamping	ER16M	ER16M	Ø20 / Ø16



	Drill holder for sub spindle IC 25bar	Drill holder for sub spindle	Drill holder for sub spindle
Product No.	TSSB81Q202	TSSB81Q201	TSSB82Q203
Ref. No.	–	–	–
Speed ratio	–	–	–
RPM Max.	–	–	–
Tool clamping	ER16M	ER20M	Ø20



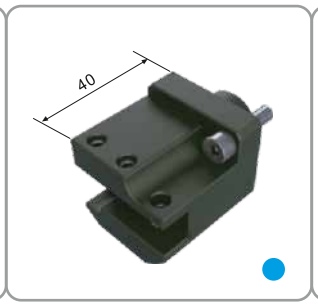

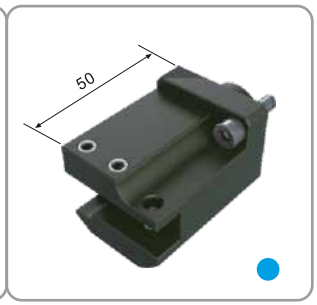

	Drill holder for sub spindle	Turning holder for sub spindle	Turning holder for sub spindle	Turning holder for sub spindle
Product No.	TSSB82Q204	TSSB912201	TSSB910201	TSSB910202
Ref. No.	–	–	–	–
Speed ratio	–	–	–	–
RPM Max.	–	–	–	–
Tool clamping	Ø20	□12	□10	□10

IC Internal Coolant BAR · Speeder · Reducer · Adjustable

M06, M08

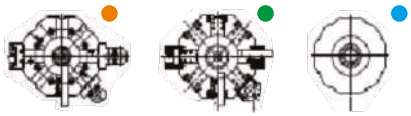


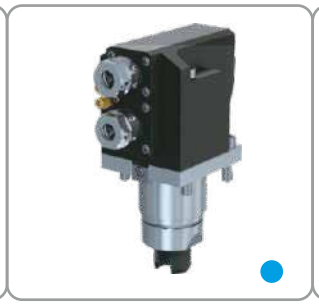
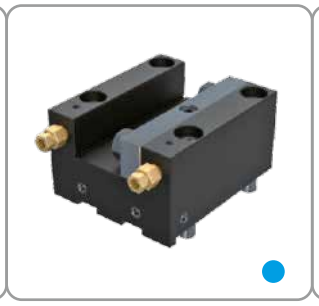
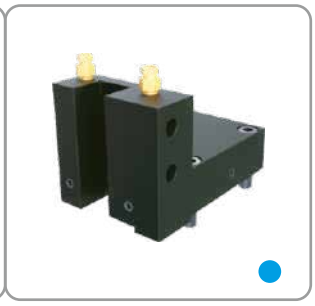

	Axial drilling/milling unit	Radial drilling/milling unit	Turning holder	Turning holder (cut-off)
Product No.	TSMC125001	TSMC2A2001	TSMC925003	TSMC925001
Ref. No.	3295-Z92511-0101	–	–	3295-H260
Speed ratio	1:1	1:1	–	–
RPM Max.	6000	5000	–	–
Tool clamping	ER25UM	ER20A	□25	□25



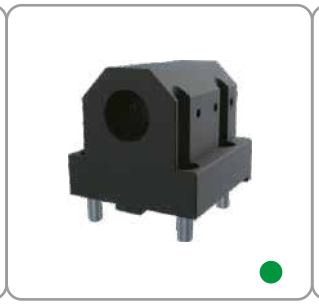


	Turning holder	Boring bar holder IC 25bar	Boring bar holder	Boring bar holder
Product No.	TSMC925002	TSMC801002	TSMC801001	TSMC802001
Ref. No.	3295-H210	–	3295-H202	–
Speed ratio	–	–	–	–
RPM Max.	–	–	–	–
Tool clamping	□25	Ø32	Ø32	Ø25




	Boring bar holder	Boring bar holder (offset, for main spindle)	Boring bar holder (offset, for sub spindle)	Boring bar holder (offset, for sub spindle)
Product No.	TSMC802004	TSMC802003/TSMC802005	TSMC802002	TSMC802007
Ref. No.	3297-H020	3295-H270	3295-H280	–
Speed ratio	–	–	–	–
RPM Max.	–	–	–	–
Tool clamping	Ø25	Ø25 / Ø32	Ø25	Ø25

M32


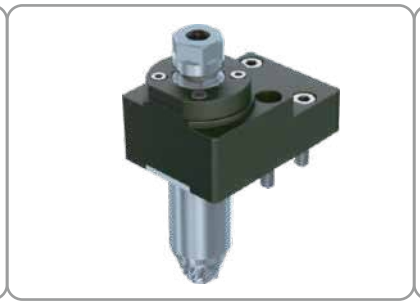


	Axial drilling/milling unit	Axial drilling/milling unit	3-spindle drilling/milling unit
Product No.	CTMC116302	CTMC116301	CTMC2A3301
Ref. No.	KSC110	KSC110-2X	GSE-1510
Speed ratio	1:1	1:2 ⬆	1:1
RPM Max.	5000	10000	6000
Tool clamping	ER16A	ER16A	ER16AM




	Radial drilling/milling unit	Radial drilling/milling unit	Drilling/milling unit	Boring bar holder IC 25bar
Product No.	CTMC2A1301	CTMC2A1302	CTMC116303	CTMC801303
Ref. No.	KSE110	KSE310	KSM110	CDF-301-IC
Speed ratio	1:1	1:1	1:1	–
RPM Max.	6000	6000	5000	–
Tool clamping	ER16A	ER16A	ER16A	Ø25.4



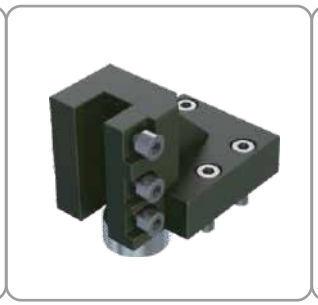


	Boring bar holder	Boring bar holder	Turning holder	Turning holder
Product No.	CTMC801301	CTMC802301	CTMC916301	CTMC919301
Ref. No.	CDF101	CDF401	CTF116	–
Speed ratio	–	–	–	–
RPM Max.	–	–	–	–
Tool clamping	Ø25.4	Ø25.4	□16	□19.05

IC Internal Coolant BAR · Speeder · Reducer · Adjustable

M16



	Axial drilling/milling unit	Axial drilling/milling unit	Axial drilling/milling unit
Product No.	CTMC111102	CTMC111101	CTMC111103
Ref. No.	MSC107BT	MSC106	MSC407
Speed ratio	1:1	1:1	1:1
RPM Max.	6000	6000	6000
Tool clamping	ER11A	ER11A	ER11A



	Radial drilling/milling unit	Radial drilling/milling unit	Slotting unit
Product No.	CTMC2A1102	CTMC2A1103	CTMC712101
Ref. No.	MSE106	MST306	MSS345
Speed ratio	1:1	1:1	1:1
RPM Max.	4000	3000	4000
Tool clamping	ER11A	ER11A	Ø12.7xØ70

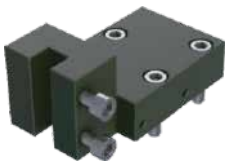



Turning holder	Turning holder (cut-off)	Boring bar holder	Boring bar holder	Boring bar holder
CTMC910101	CTMC910102	CTMC801102	CTMC801101	CTMC802101
VTF110	VTF1310	VDF201	VDF501	VDF401
☐ 10	☐ 10	Ø19.05	Ø19.05	Ø19.05

IC InteralCoolant BAR · Speeder · Reducer · Adjustable

L Series

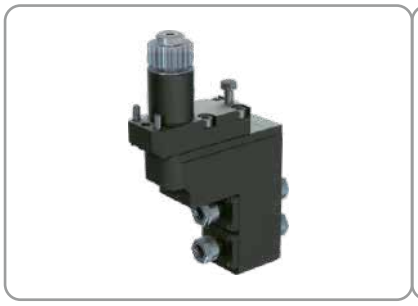
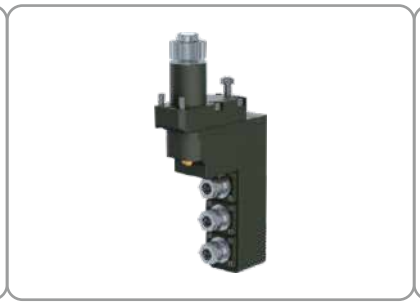
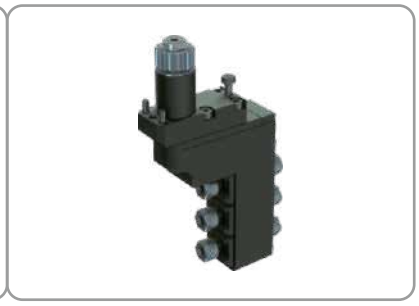

	2-spindle double drilling/milling unit	3-spindle drilling/milling unit	3-spindle double drilling/milling unit
Product No.	CTLA2B2301	CTLA2A3301	CTLA2B3302
Ref. No.	–	BSE307/BSE407/BSE607	BSE507/BSE707
Speed ratio	1:1	1:1	1:1
RPM Max.	6000	6000	6000
Tool clamping	ER11A	ER11A	ER11A

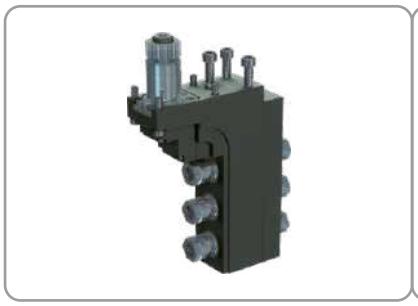
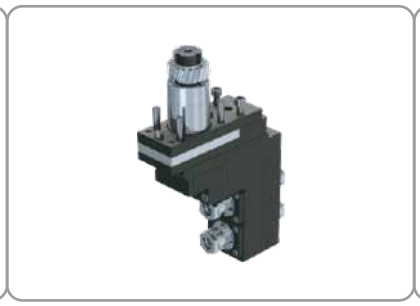


	3-spindle double drilling/milling unit	2-spindle double drilling/milling unit	3-spindle double drilling/milling unit
Product No.	CTLA2B3301	CTLA2B2201	CTLA2B3202
Ref. No.	GSE1810	GSE3107	GSE3207
Speed ratio	1:1	1:1	1:1
RPM Max.	6000	6000	6000
Tool clamping	ER16AM	ER11A	ER11A

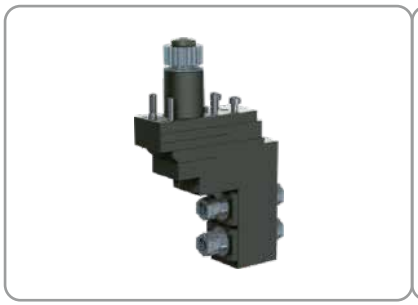
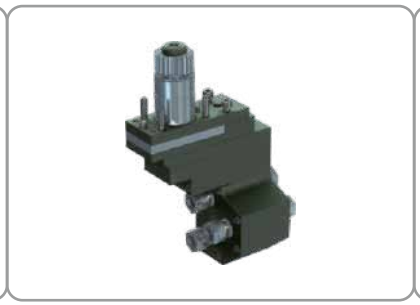


	2-spindle double drilling/milling unit	3-spindle double drilling/milling unit	3-spindle double drilling/milling unit
Product No.	CTLA2B2202	CTLA2B3206	CTLA2B3101
Ref. No.	GSE3707	GSE3807	GSE3607
Speed ratio	1:1	1:1	1:1
RPM Max.	6000	6000	8000
Tool clamping	ER11A	ER11A	ER11A

IC Internal Coolant BAR · Speeder · Reducer · Adjustable

L Series

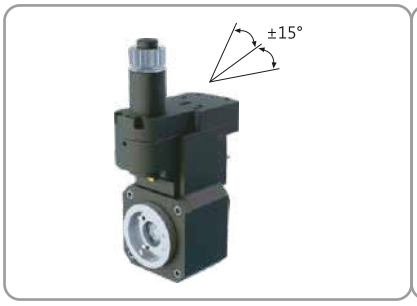

	Thread whirling unit	Drilling/milling unit	Gear hobbing unit
Product No.	CTLA545201	CTLA2A3202	CTAA608201
Ref. No.	–	GSE3210	–
Speed ratio	1:1	1:1	1:1
RPM Max.	6000	–	3000
Tool clamping	Utilis no.119287	Ø31	Ø8xØ25x15

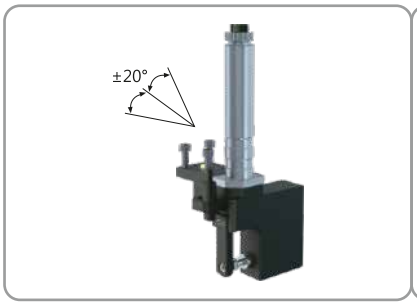

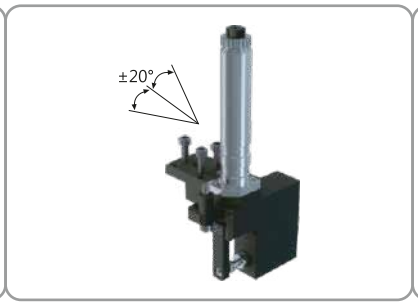

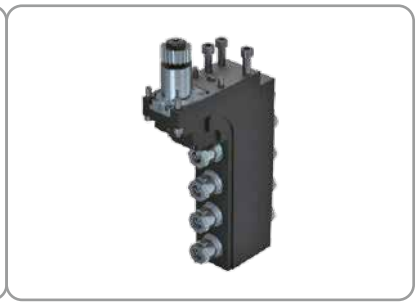

	Gear hobbing unit	Gear hobbing unit	4-spindle double drilling/milling unit
Product No.	CTLA608201	CTLA608202	CTLA2B4301
Ref. No.	–	–	GSE-2010
Speed ratio	1:1	1:1	1:1
RPM Max.	6000	6000	6000
Tool clamping	Ø8xØ25x12	Ø8xØ25x12	ER16AM

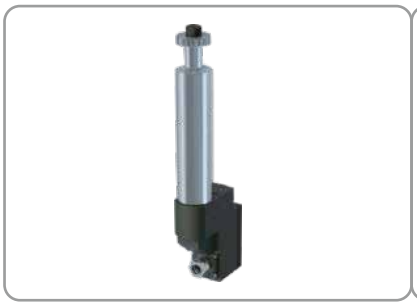

	Drilling/milling unit	Double drilling/milling unit	Double drilling/milling unit
Product No.	CTLA2A1201	CTLA2B1302	CTLA2B1201
Ref. No.	–	–	–
Speed ratio	1:1	1:3	1:1
RPM Max.	6000	15000	6000
Tool clamping	ER11A	ER11A	ER11A/ER11M

IC InteralCoolant BAR · Speeder · Reducer · Adjustable

L Series



	Double drilling/milling unit	Double drilling/milling unit	2-spindle drilling/milling unit
Product No.	CTLA2B1203	CTLA2B1301	CTLA2A2202
Ref. No.	–	–	–
Speed ratio	1:3	1:1	1:1
RPM Max.	15000	6000	8000
Tool clamping	ER11A	ER11A/ER11M	ER11A



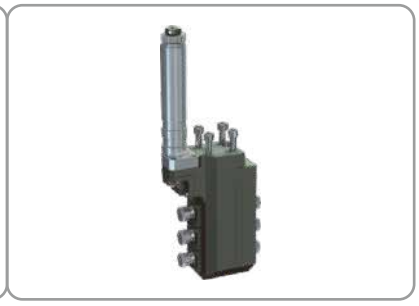

	3-spindle drilling/milling unit	3-spindle double drilling/milling unit	3-spindle double drilling/milling unit
Product No.	CTLA2A3204	CTLA2B3203	CTLA2B3204
Ref. No.	–	–	GSE1007
Speed ratio	1:1	1:1	1:1
RPM Max.	8000	8000	4000
Tool clamping	ER11A	ER11A/ER11M	ER11A



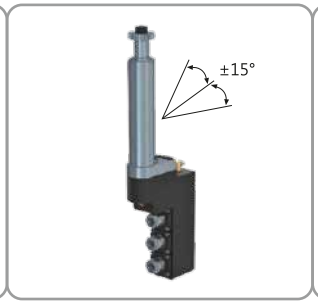

	3-spindle drilling/ milling unit	3-spindle double drilling/ milling unit	3-spindle drilling/ milling unit	2 spindle axial drilling/ milling unit
Product No.	CTLA2A3201	CTLA2B3205	CTLA2A3205	CTLA111203
Ref. No.	GSE910	GSE1307	GSA107	GSC-1607
Speed ratio	1:1	1:1	1:1	1:1
RPM Max.	4000	4000	6000	4000
Tool clamping	ER16M	ER11A	ER11A	ER11A

IC Internal Coolant BAR · Speeder · Reducer · Adjustable

L Series



	Cross drilling/milling unit	Cross drilling/milling unit	Cross drilling/milling unit
Product No.	CTAA116201	CTLA116201	CTLA116203
Ref. No.	GSC1310/GSC1110	GSC1210	GSC1210
Speed ratio	1:1	1:1	1:1
RPM Max.	7000	8000	8000
Tool clamping	ER16AM	ER16M	ER16



	Cross drilling/milling unit	Cross drilling/milling unit	Cross drilling/milling unit
Product No.	CTLA116202	CTLA116301	CTLA111206
Ref. No.	GSC510/GSC1010	GSC310	GSC507-3X
Speed ratio	1:1	1:1	1:3 ⬆
RPM Max.	8000	8000	18000
Tool clamping	ER16A	ER16A	ER11A



	Cross drilling/milling unit	Cross drilling/milling unit	Cross drilling/milling unit
Product No.	CTLA111208	CTLA111202	CTAA116202
Ref. No.	GSE307	GSC907	GSC1310
Speed ratio	1:1	1:1	1:1
RPM Max.	5000	6000	7000
Tool clamping	ER11A	ER11A	Ø10.5/M10x1.5

IC InteralCoolant BAR · Speeder · Reducer · Adjustable

L Series


	Cross drilling/milling unit	Cross drilling/milling unit
Product No.	CTAA116301	CTAA120301
Ref. No.	GSC1310	–
Speed ratio	1:1	1:1
RPM Max.	7000	6000
Tool clamping	Ø10.5/M10x1.5	ER20A




	Cross drilling/milling unit	Cross drilling/milling unit	Boring bar holder	Boring bar holder
Product No.	CTLA111101	CTLA111303	CTLA802206	CTLA803208
Ref. No.	–	–	–	–
Speed ratio	1:1	1:3	–	–
RPM Max.	8000	18000	–	–
Tool clamping	ER11A	ER11A	Ø19.05	Ø19.05




	Boring bar holder	Boring bar holder	Drill holder	Drill holder
Product No.	CTLA804101	CTLA804301	CTLA804302	CTLA804303
Ref. No.	–	–	GDF1601	GDF1601
Speed ratio	–	–	–	–
RPM Max.	–	–	–	–
Tool clamping	Ø19.05	Ø19.05	Ø25	Ø25.4

IC Internal Coolant BAR · Speeder · Reducer · Adjustable

L Series

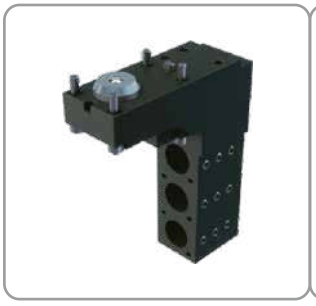


	Boring bar holder	Boring bar holder	Boring bar holder	Boring bar holder
Product No.	CTLA803305/CTLA803304	CTLA803302	CTLA803303	CTLA802202
Ref. No.	GDF1601	–	–	GDF508
Speed ratio	–	–	–	–
RPM Max.	–	–	–	–
Tool clamping	Ø25.4 / Ø25	Ø19.05	Ø20	Ø19.05




	Boring bar holder	Boring bar holder	Boring bar holder	Boring bar holder
Product No.	CTLA801201	CTLA802201	CTLA803202	CTLA803203/CTLA803210
Ref. No.	GDF506	–	–	–
Speed ratio	–	–	–	–
RPM Max.	–	–	–	–
Tool clamping	Ø19.05	Ø19.05	Ø19.05	Ø19.05 / Ø20




	Boring bar holder	Boring bar holder	Boring bar holder	Boring bar holder
Product No.	CTLA803204/CTLA803206	CTLA803205/CTLA803207	CTLA803101	CTLA803201
Ref. No.	GDF507	–	–	GDF607
Speed ratio	–	–	–	–
RPM Max.	–	–	–	–
Tool clamping	Ø19.05 / Ø20	Ø20 / Ø19.05	Ø19.05	Ø19.05

L Series



	Sub Spindle Boring Bar Holder	Sub Spindle Boring Bar Holder	Sub Spindle Boring Bar Holder
Product No.	CTLB82B205~216	CTLB82Q205~216	CTLB82C206
Ref. No.	–	–	–
Speed ratio	–	–	–
RPM Max.	–	–	–
Tool clamping	Ø5/6/8/10/12/16	Ø5/6/8/10/12/16	Ø6



	Sub Spindle Boring Bar Holder	Drill holder for sub spindle	Drill holder for sub spindle IC 25bar
Product No.	CTLB82C216	CTLB81Q202	CTLB81Q301
Ref. No.	–	GDS210	–
Speed ratio	–	–	–
RPM Max.	–	–	–
Tool clamping	Ø16	ER16M	ER16A



	Drill holder for sub spindle	Drill holder for sub spindle IC 40bar	Drill holder for sub spindle IC 40bar
Product No.	CTLB82Q301/CTLB82Q302	CTLB81B201	CTLB81C201
Ref. No.	SAU825	CTA646100	–
Speed ratio	–	–	–
RPM Max.	–	–	–
Tool clamping	Ø25.4/Ø16	ER16M	ER16M

IC Internal Coolant BAR · Speeder · Reducer · Adjustable

L Series


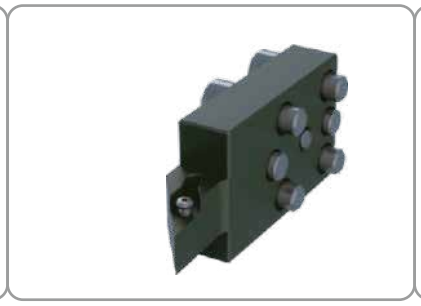


	Turning holder	Turning holder	Turning holder
Product No.	CTLA900055	CTLA900035	CTLA900060
Ref. No.	GTF3712	–	–
Speed ratio	–	–	–
RPM Max.	–	–	–
Tool clamping	DC.T1103	VC.T1103	TGF32R 175 PR930




	Turning holder	Turning holder	Turning holder	Turning holder for sub spindle
Product No.	CTLA910101	CTLA912301	CTLA912201	CTLB912201
Ref. No.	–	–	GTF6312	–
Speed ratio	–	–	–	–
RPM Max.	–	–	–	–
Tool clamping	☐10	☐12	☐12	☐12


	Turning holder for sub spindle	Turning holder for sub spindle	Boring bar holder for sub spindle
Product No.	CTLB912301	CTLBA25000+COMBADL550	CTLBA25000+COMBAB0000
Ref. No.	–	–	–
Speed ratio	–	–	–
RPM Max.	–	–	–
Tool clamping	☐12	DC.T11T3	Ø3/4/5/6/8/9/10/12/16

IC InteralCoolant BAR · Speeder · Reducer · Adjustable

L Series



	Drilling/milling unit for sub spindle 1:2	Drilling/milling unit for sub spindle	Drilling/milling unit for sub spindle
Product No.	CTLB111203	CTLB111206	CTLB116201
Ref. No.	MSC-507-2X	MSC507	MSC512
Speed ratio	1:2	1:4	1:1
RPM Max.	12000	24000	8000
Tool clamping	ER11A	ER11A	ER16A



	Drilling/milling unit for sub spindle	Cross drilling/milling unit for sub spindle	Cross drilling/milling unit for sub spindle
Product No.	CTLB111202	CTLB311205	CTLB316301
Ref. No.	GSE3307/GSE3507/MSC507	GSS1330/GSS1430/GSS1530	GSE1910
Speed ratio	1:1	1:1	1:1
RPM Max.	8000	6000	6000
Tool clamping	ER11A	ER11A	ER16AM

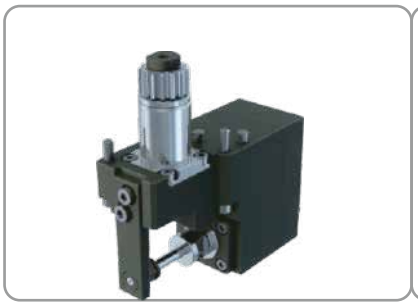

	Slotting unit for sub spindle	Idler shaft	Idler shaft
Product No.	CTLB700201	CTLA100000	CTLA100001
Ref. No.	–	–	–
Speed ratio	1:1	–	–
RPM Max.	4000	–	–
Tool clamping	Ø6/12.7xØ35	–	–

IC Internal Coolant BAR · Speeder · Reducer · Adjustable

A Series

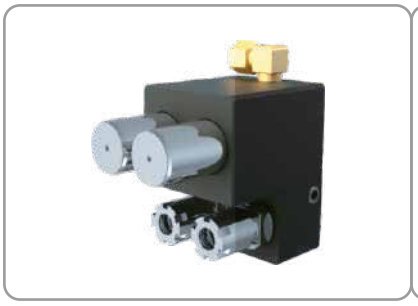

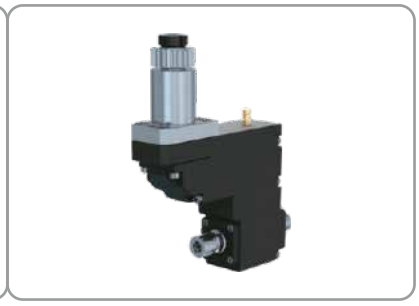

	Drill holder (deep hole)	3-spindle double drilling/milling unit	Double drilling/milling unit
Product No.	CTAA802201	CTAA2B3301	CTAA2B1201
Ref. No.	–	GSE1710	BSE107
Speed ratio	–	1:1	1:1
RPM Max.	–	4000	4000
Tool clamping	ER16M	ER16AM	ER11M

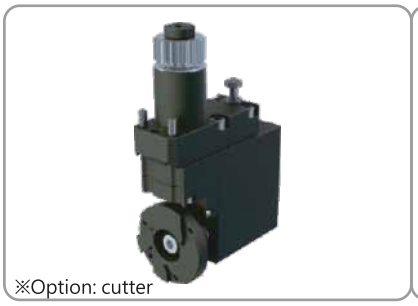
※Option: cutter

	Polygon unit	Boring bar holder	Boring bar holder
Product No.	CTAA400201	CTAA803201	CTAA803202
Ref. No.	–	–	–
Speed ratio	1:1	–	–
RPM Max.	5000	–	–
Tool clamping	–	Ø20	Ø19.05

	Gear hobbing unit
Product No.	CTAA608202
Ref. No.	–
Speed ratio	–
RPM Max.	3000
Tool clamping	Ø25xØ8x15

BND, BNE, BNJ, ABX




	Axial drilling/milling unit	Axial drilling/milling unit	Axial drilling/milling unit	Radial drilling/milling unit IC 25bar
Product No.	BM45MI1A0101	BM45MI1A0106	BM45MI1A0202	BM45MI1B0101
Ref. No.	2W785600	1X783000	–	2W785550
Speed ratio	1:1	1:1	1:1	1:1
RPM Max.	6000	6000	6000	6000
Tool clamping	ER20A	ER20A	ER16A	ER20A

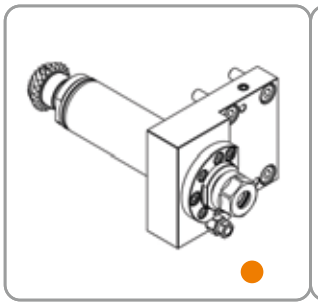
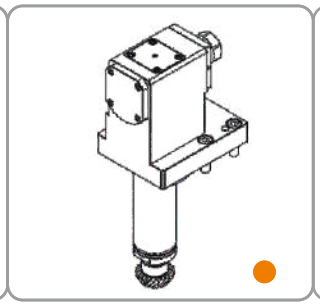

	Axial drilling/milling unit	Radial drilling/milling unit	Radial drilling/milling unit	Axial drilling/milling unit
Product No.	BM38MI1A0103	BM38MI1B0104	BM54MI1B0103	BM45MI1A0102
Ref. No.	DV70B001	DV70A000	–	2K700000
Speed ratio	1:1	1:1	1:1	1:1
RPM Max.	6000	6000	6000	6000
Tool clamping	ER16A	ER16A	ER32UM	ER20A



	Radial drilling/milling unit IC 25bar	2 spindle radial drilling/milling unit	Universal drilling/milling unit
Product No.	BM45MI1B0102	BM45MI1B0202	BM45MI1H1802
Ref. No.	2K701000	–	–
Speed ratio	1:1	1:1	1:1
RPM Max.	4000	6000	6000
Tool clamping	ER20A	ER16M	ER20M

IC Internal Coolant BAR · Speeder · Reducer · Adjustable

BND, BNE, BNJ, ABX

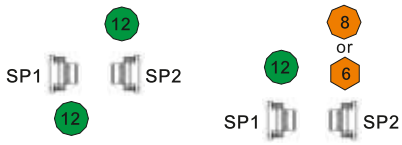

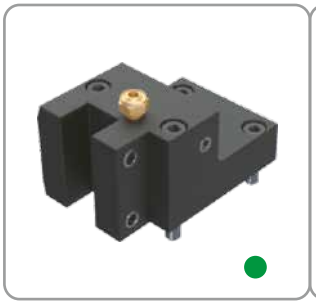
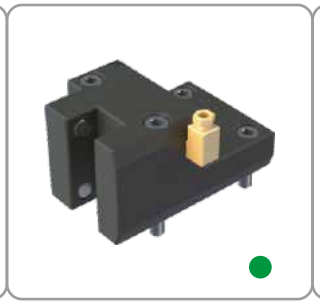

	Turning holder	Turning holder	Turning holder	Turning holder
Product No.	BM45MI2A2001	BM45MI2A2005	BM45MI2B2002	BM45MI2B2001
Ref. No.	1X780100	1X780200	1X784100	1X784600
Speed ratio	–	–	–	–
RPM Max.	–	–	–	–
Tool clamping	□20	□20	□20	□20


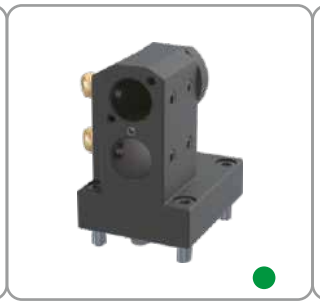
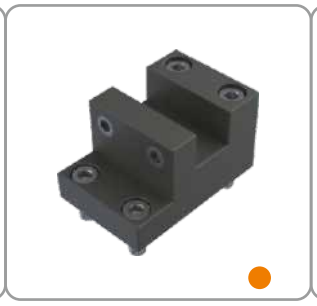


	Multiple holder	Boring bar holder	Turning holder	Boring bar holder
Product No.	BM45MI2E0001	BM45MI2D2501	BM38MI2A2006	BM38MI2D1501
Ref. No.	1X780500	1X780600	–	2K749001
Speed ratio	–	–	–	–
RPM Max.	–	–	–	–
Tool clamping	□20 Ø25	Ø25	□20	Ø25


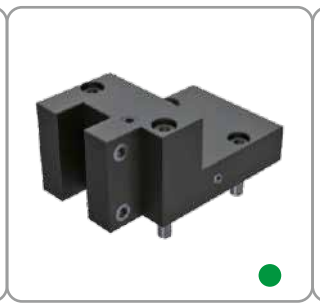
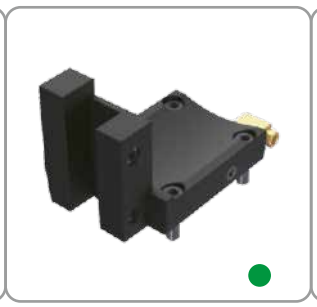


	Boring bar holder for sub spindle	Turning holder	Turning holder (cut-off)	Turning holder (Cut-off)
Product No.	BM38MI2D2503	BM45MI2A2003	BM45MI2A2004	BM45MI2A2006
Ref. No.	DV73B000	MYD020100	2X782401	2X782401
Speed ratio	–	–	–	–
RPM Max.	–	–	–	–
Tool clamping	Ø25	–	□20	□20x12

IC InteralCoolant BAR · Speeder · Reducer · Adjustable

BNA



	Cross drilling/milling unit	Axial drilling/milling unit	Radial drilling/milling unit IC 25bar
Product No.	BM38MI1A0104	BM38MI1A0201	BM38MI1B0102
Ref. No.	CG70A000	CL70A000	CG70C000
Speed ratio	1:1	1:1.66	1:1
RPM Max.	8000	6000	6000
Tool clamping	ER16A	ER11A	ER16A



	Radial drilling/milling unit	Radial drilling/milling unit	Radial drilling/milling unit
Product No.	BM38MI1B0105	BM38MI1B0101	BM38MI1B0202
Ref. No.	CG70C000	CG70D000	–
Speed ratio	1:1	1:1	1:1
RPM Max.	6000	6000	6000
Tool clamping	ER16A	ER16A	ER11



	Radial drilling/milling unit	Double Radial drilling/milling unit	Turning holder (Cut-off)
Product No.	BM38MI1B0201	BM38MI1B0106	BM38MI2A2001
Ref. No.	CG70E000	–	CG73C000
Speed ratio	1:1	1:1	–
RPM Max.	6000	6000	–
Tool clamping	ER16A	ER16-NUT	□20

IC Internal Coolant BAR · Speeder · Reducer · Adjustable

BNA

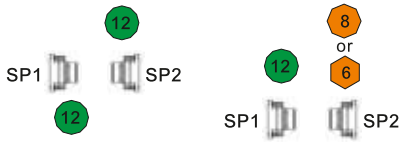

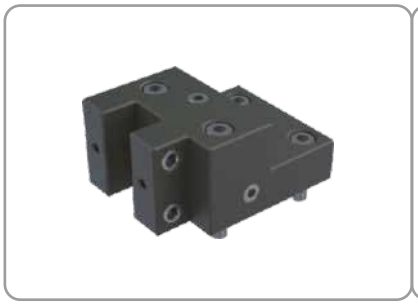

	Turning holder	Turning holder	Turning holder
Product No.	BM38MI2A2003	BM38MI2B2001	BM38MI2B2002
Ref. No.	CG73M000	CL73A001	CG73L000
Speed ratio	–	–	–
RPM Max.	–	–	–
Tool clamping	□20	□20	□20



	Boring bar holder	Boring bar holder	Boring bar holder
Product No.	BM38MI2D2501	BM38MI2D3501	BM38MI2D4501
Ref. No.	CG73P000	CG73E000	CL73B000
Speed ratio	–	–	–
RPM Max.	–	–	–
Tool clamping	Ø25	Ø25	Ø25

BNC


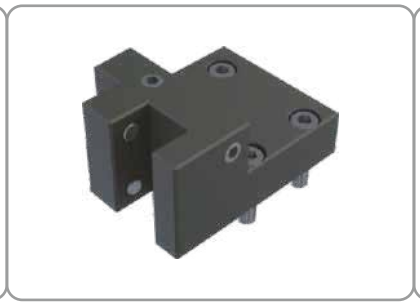


	Turning holder	Turning holder	Cross drilling/milling unit
Product No.	BM38MI2A2005	BM38MI2A2004	BM38MI1A0102
Ref. No.	7S780100	7S780200	1U783000
Speed ratio	–	–	1:1
RPM Max.	–	–	6000
Tool clamping	□20	□20	ER16A

IC InteralCoolant BAR · Speeder · Reducer · Adjustable

CB



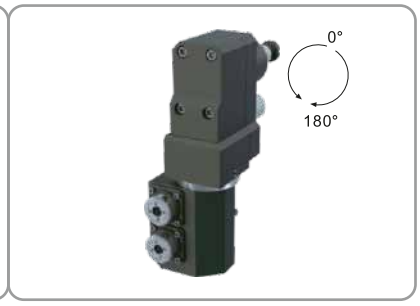

	Gear hobbing unit	Cross drilling/milling unit, 2-spindle	2-spindle drilling/milling unit
Product No.	CCBA610301	CCBA116301	CCBA2A2301
Ref. No.	–	–	–
Speed ratio	1:1	1:1	1:1
RPM Max.	6000	6000	6000
Tool clamping	Ø10xØ30x20	ER16A	ER11



	4-spindle double drilling/milling unit	5-spindle double drilling/milling unit	5-spindle double drilling/milling unit
Product No.	CCBA2B4301	CCBA2B5301	CCBA2B5302
Ref. No.	–	–	–
Speed ratio	1:2	1:2	1:1
RPM Max.	6000	6000	6000
Tool clamping	ER20M*4/ER16M*4+Ø25*5	ER16A*5/ER11A*5+Ø25*5	ER16A*5/ER11A*5+Ø25*5


	Slotting unit for sub spindle	Cross drilling/milling unit for sub spindle
Product No.	CCBB700301	CCBB316301
Ref. No.	–	–
Speed ratio	1:0.75	1:1
RPM Max.	3000	5000
Tool clamping	Ø6/12.7xØ45	ER16

IC Internal Coolant BAR · Speeder · Reducer · Adjustable

CB



	Turning holder for sub spindle	Turning holder for sub spindle	Turning holder for sub spindle
Product No.	CCBB912302	CCBB912301	CCBB916301
Ref. No.	–	–	–
Speed ratio	–	–	–
RPM Max.	–	–	–
Tool clamping	□12	□12	□16



	Drill holder for sub spindle	Boring bar holder for sub spindle	Drill holder for sub spindle
Product No.	CCBB81Q302	CCBB82Q302	CCBB82Q301
Ref. No.	–	–	–
Speed ratio	–	–	–
RPM Max.	–	–	–
Tool clamping	ER20A	Ø12	Ø25

SY2-45

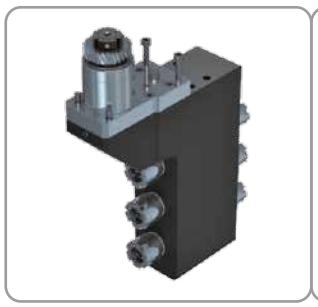
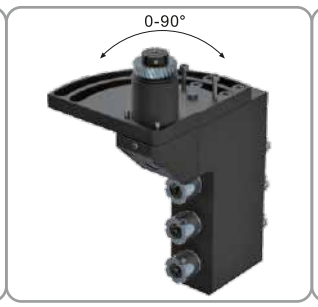


	Drilling/milling unit	Drilling/milling unit, Angle adj. 0~90°	Cross drilling/milling unit for sub spindle	Slotting unit for sub spindle
Product No.	CCSA2B3401	CCSA2B3402	CCSB320401	CCSB712401
Ref. No.	–	–	–	–
Speed ratio	1:1	1:1	1:1.026	1:1.026
RPM Max.	6000	6000	6000	6000
Tool clamping	ER20M	ER20M	ER20M	Ø12.7xØ70

IC Internal Coolant BAR · Speeder · Reducer · Adjustable

CT-52YM

	Axial drilling/milling unit	Axial drilling/milling unit IC 30bar	Gear hobbing unit
Product No.	BM65NK1A0101	BM65NK1A0102	BM65NK1F2221
Ref. No.	–	–	–
Speed ratio	1:1	1:1	2:1
RPM Max.	6000	6000	3000
Tool clamping	ER32UM	ER32UM	Ø22.225xØ80x80

	Radial drilling/milling unit	Radial drilling/milling unit IC 30bar	Universal drilling/milling unit
Product No.	BM65NK1B0101	BM65NK1B0102	BM65NK1H1801
Ref. No.	–	–	–
Speed ratio	1:1	1:1	1:1
RPM Max.	6000	6000	6000
Tool clamping	ER32UM	ER32UM	ER20

CY2-52

SY2-42E

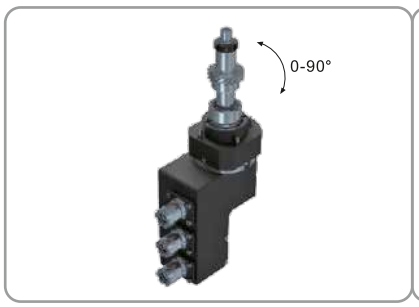

	Drilling/milling unit	Drilling/milling unit	Cross drilling/milling unit for sub spindle
Product No.	CCYA2A3502	CCYA2A3503	CCSB316401
Ref. No.	–	–	–
Speed ratio	1:1	1:1	1:1
RPM Max.	6000	6000	6000
Tool clamping	ER16M	ER16M	ER16A

IC Internal Coolant BAR · Speeder · Reducer · Adjustable

YB Series



	Tool holder	Cross drilling/milling unit	2-spindle drilling/milling unit
Product No.	NUYA0001	NUYA120201	NUYA2A2301
Ref. No.	–	–	–
Speed ratio	–	1:1	1:1
RPM Max.	–	6000	6000
Tool clamping	–	ER20M	ER16M


	Drill holder for sub spindle (deep hole)	Drilling/milling unit for sub spindle
Product No.	NUYB81Q305	NUYB111301
Ref. No.	–	–
Speed ratio	–	1:1
RPM Max.	–	6000
Tool clamping	ER16M	ER11M

Other


	3-spindle drilling/milling unit	Cross drilling/milling unit
Product No.	NUJA2A3201	NUBA108201
Ref. No.	–	–
Speed ratio	1:1	1:1
RPM Max.	6000	6000
Tool clamping	ER11A	ER8M

IC Internal Coolant BAR Speeder Reducer Adjustable

SB Series



	4-spindle drilling/milling unit	Cross drilling/milling unit, 3-spindle	2-spindle drilling/milling unit
Product No.	NUSA2A4101	NUSA111102	NUSA2A2102
Ref. No.	–	–	–
Speed ratio	1:1	1:1	1:1
RPM Max.	6000	6000	6000
Tool clamping	ER11	ER11M	ER11



	Cross drilling/milling unit, 2-spindle	Cross drilling/milling unit, 3-spindle	Drilling/milling unit, Angle adj. 0~90°	Slotting unit for sub spindle
Product No.	NUSA116101	NUSA116102	NUSA2A2101	NUSB706101
Ref. No.	–	–	–	–
Speed ratio	1.59:1	1:1	1:1	1:0.55
RPM Max.	6000	6000	6000	4000
Tool clamping	ER16M	ER16M	ER11M	Ø5/Ø6/Ø8/Ø10/Ø12.7/Ø13

UB Series



	Drill holder for sub spindle	Drill holder for sub spindle	Sub Spindle Boring Bar Holder
Product No.	NUUB81Q202	NUUB81Q204	NUUB82A200
Ref. No.	–	–	–
Speed ratio	–	–	–
RPM Max.	–	–	–
Tool clamping	ER16M	ER16M	Ø6/8/10/12

IC Internal Coolant BAR · Speeder · Reducer · Adjustable

UB Series



	Cross drilling/milling unit	Cross drilling/milling unit	Idler shaft
Product No.	NUUA116204	NUUA116201	NUUA100000
Ref. No.	–	–	–
Speed ratio	1:1	1:1	–
RPM Max.	6000	6000	–
Tool clamping	ER16M	ER16M	–


	3-spindle drilling/milling unit	Sub Spindle Boring Bar Holder
Product No.	NUUA2A3202	NUUB82Q206
Ref. No.	–	–
Speed ratio	1:1	–
RPM Max.	6000	–
Tool clamping	ER11M	Ø6


	Drilling/milling unit	Axial drilling/milling unit
Product No.	NUJA2A1201	NUUA116202
Ref. No.	–	–
Speed ratio	1:1	1:1
RPM Max.	6000	6000
Tool clamping	ER11M	ER16M

Back Processing Static Tool Holder Shaft: Ø22, Ø23



	Drill holder for sub spindle	Drill holder for sub spindle	Drill holder for sub spindle (deep hole)
Product No.	NUUB81Q201 / NUUB81Q203	NUYB81Q301 / NUYB81Q302	NUYB81Q304 / NUYB81Q303
Ref. No.	–	–	–
Speed ratio	–	–	–
Shank diameter	Ø22 / Ø23	Ø22 / Ø23	Ø22 / Ø23
Tool clamping	ER16M	ER16M	ER16M

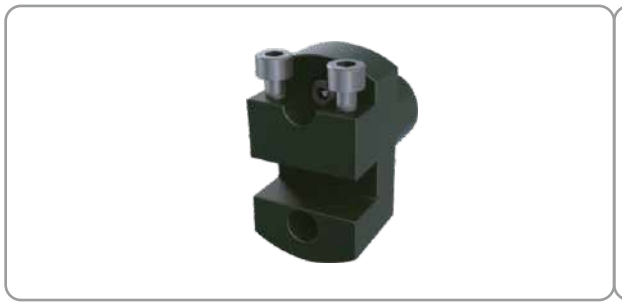
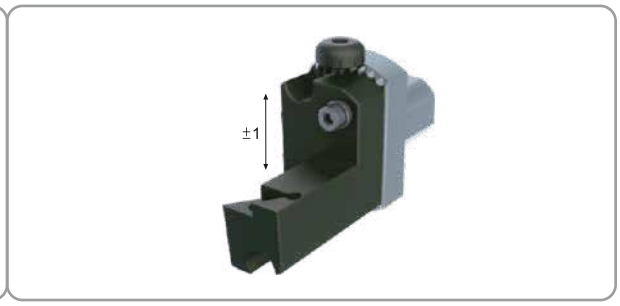

	Turning holder for sub spindle	Turning holder for sub spindle
Product No.	NUUB910201 / NUUB910202	NUUBA22000+COMBADL550
Ref. No.	–	–
Speed ratio	–	–
Shank diameter	Ø22 / Ø23	Ø22
Tool clamping	□10	DC..11T3

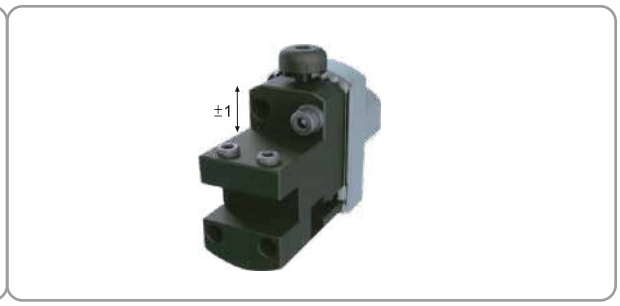

	Turning holder for sub spindle	Turning holder for sub spindle
Product No.	NUUBA22000+COMBADR550	NUUBA22000+COMBAC1000
Ref. No.	–	–
Speed ratio	–	–
Shank diameter	Ø22	Ø22
Tool clamping	DC.11T3	□10

IC Internal Coolant BAR · Speeder · Reducer · Adjustable

XD20H



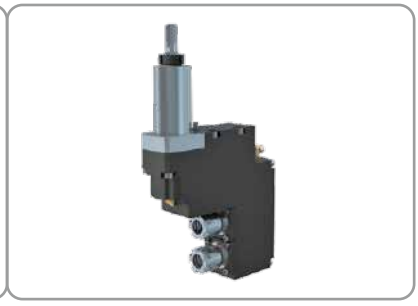

	Cross drilling/milling unit	Cross drilling/milling unit	2-spindle drilling/milling unit
Product No.	HWDA116201	HWDA116203	HWDA2A2201
Ref. No.	–	–	–
Speed ratio	1:1	1:1	1:1
RPM Max.	8000	8000	6000
Tool clamping	ER16A	ER16M	ER16M

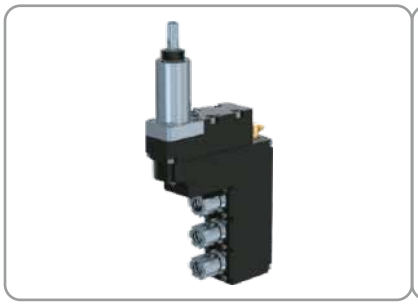
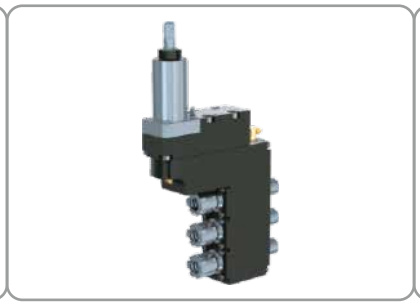
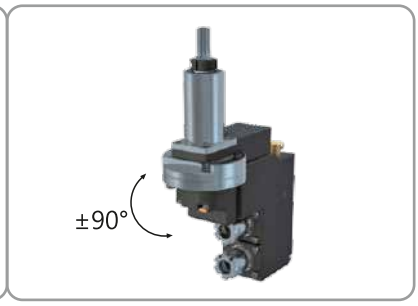

	3-spindle drilling/milling unit	3-spindle double drilling/milling unit	Drilling/milling unit, Angle adj. 0~90°
Product No.	HWDA2A3201	HWDA2B3202	HWDA2A2202
Ref. No.	–	–	–
Speed ratio	1:1	1:1	1:1
RPM Max.	6000	6000	8000
Tool clamping	ER16M	ER16M/ER11M	ER16M

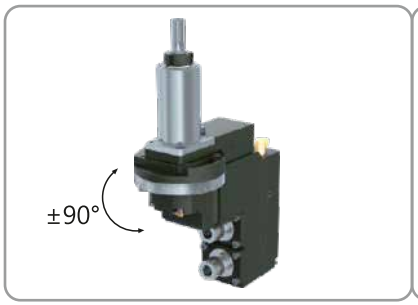

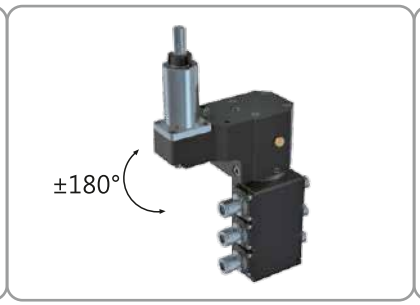

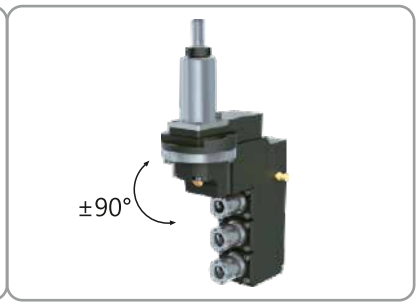

	2-spindle drilling/milling unit	3-spindle double drilling/milling unit	3-spindle drilling/milling unit
Product No.	HWDA2A2203	HWDA2B3209	HWDA2A3202
Ref. No.	–	HWX591300	–
Speed ratio	1:1	1:1	1:1
RPM Max.	8000	8000	8000
Tool clamping	ER11M	ER11M/ER8M	ER16M

IC Internal Coolant BAR · Speeder · Reducer · Adjustable

XD20H

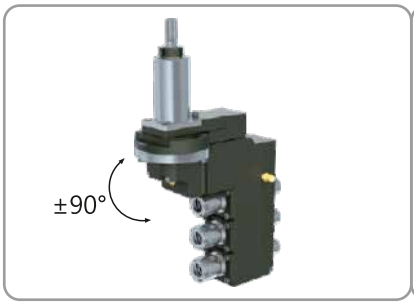

	3-spindle double drilling/milling unit	Drilling/milling unit for sub spindle	Cross drilling/milling unit for sub spindle
Product No.	HWDA2B3204	HWDB116201	HWDB311201
Ref. No.	–	–	–
Speed ratio	1:1	1:1	1:0.55
RPM Max.	8000	8000	4000
Tool clamping	ER16M/ER11M	ER16A	ER11A

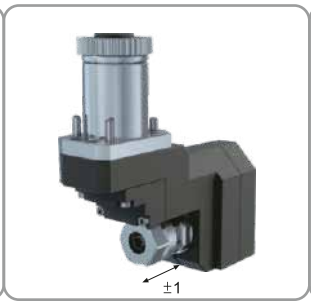

	Cross drilling/milling unit for sub spindle	Cross drilling/milling unit for sub spindle	Slotting unit for sub spindle	Thread whirling unit
Product No.	HWDB311202	HWDB316202	HWDB700201	HWDA545205
Ref. No.	–	–	–	–
Speed ratio	1:1	1:0.55	1:0.55	1:1
RPM Max.	4000	4000	4000	6000
Tool clamping	ER11A	ER16A	Ø5/6/8/10/12.7/13xØ50	Utilis no.119287

	Boring bar holder	Boring bar holder	Turning holder	Turning holder
Product No.	HWDA803201	HWDA803202	HWDA912201	HWDA912202
Ref. No.	–	–	–	–
Speed ratio	–	–	–	–
RPM Max.	–	–	–	–
Tool clamping	Ø25	Ø25	□12	□12

IC Internal Coolant BAR · Speeder · Reducer · Adjustable

XD20HII



	Cross drilling/milling unit	Cross drilling/milling unit	3-spindle drilling/milling unit
Product No.	HWDA116202	HWDA116204	HWDA2A3203
Ref. No.	–	–	–
Speed ratio	1:1	1:3	1:1
RPM Max.	6000	18000	6000
Tool clamping	ER16A	ER11A	ER16M

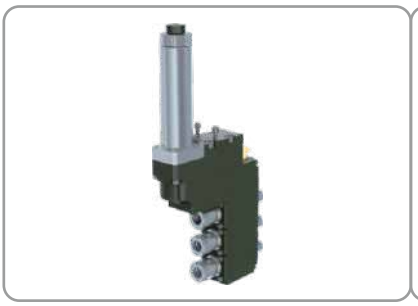
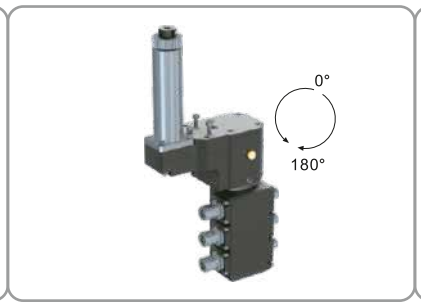

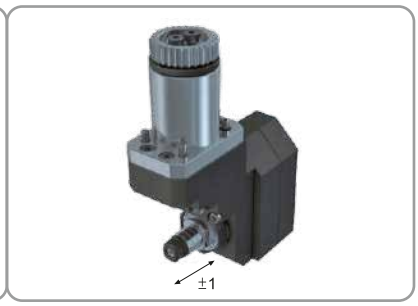

	3-spindle double drilling/milling unit	3-spindle double drilling/milling unit	Slotting unit for sub spindle
Product No.	HWDA2B3207	HWDA2B3208	HWDB706203
Ref. No.	–	–	–
Speed ratio	1:1	1:1	1:0.55
RPM Max.	6000	8000	4000
Tool clamping	ER16M/ER11M	ER11M/ER8M	Ø6/12.7/13xØ50

XD12H


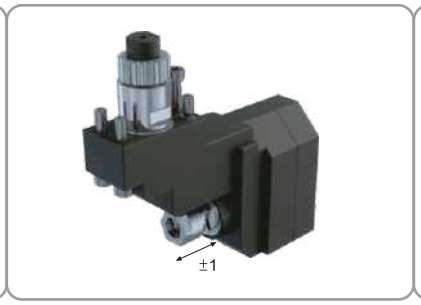

	Slotting unit for sub spindle	Cross drilling/milling unit for sub spindle	Drilling/milling unit for sub spindle
Product No.	HWDB700101	HWDB311101	HWDB111101
Ref. No.	–	–	–
Speed ratio	1:0.55 HWDB700101	1:0.55	1:1
RPM Max.	4000	4000	6000
Tool clamping	Ø5/6/8/10/12.7/13xØ50	ER11A	ER11

IC Internal Coolant BAR · Speeder · Reducer · Adjustable

XD32H

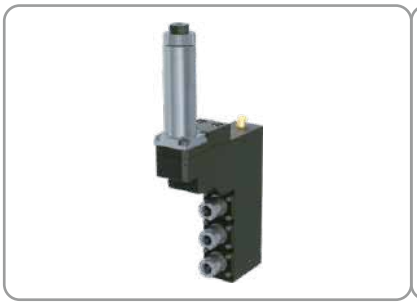

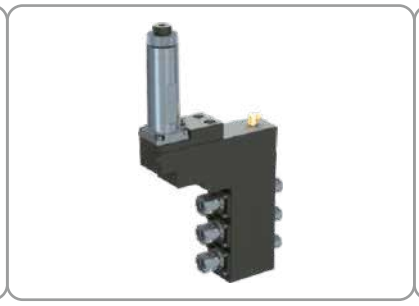

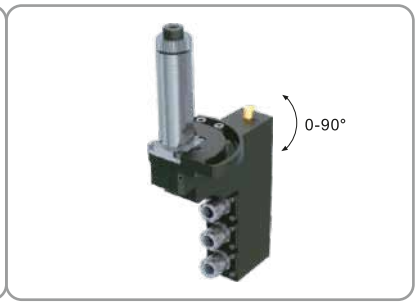

	3-spindle drilling/milling unit	3-spindle double drilling/milling unit	3-spindle drilling/milling unit
Product No.	HWDA2A3302	HWDA2B3302	HWDA2A3301
Ref. No.	–	–	–
Speed ratio	1:1	1:1	1:1
RPM Max.	6000	6000	6000
Tool clamping	ER16M	ER16M/ER11M	ER16M

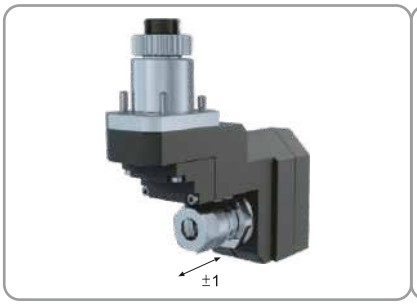

	Cross drilling/milling unit for sub spindle	Slotting unit for sub spindle	Slotting unit for sub spindle
Product No.	HWDB316301	HWDB700301	HWDB700302
Ref. No.	–	–	–
Speed ratio	1:0.77	1:0.77	1:0.55
RPM Max.	4000	4000	4000
Tool clamping	ER16A	Ø5/6/8/10/12.7/13xØ60	Ø5/6/8/10/12.7/13xØ50

XD-20IIV

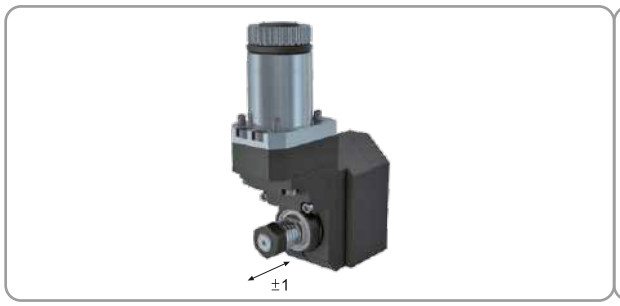

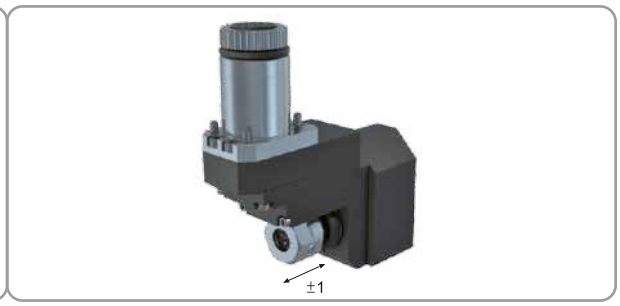

	Slotting unit for sub spindle	Cross drilling/milling unit for sub spindle
Product No.	HWDB700202	HWDB316203
Ref. No.	–	–
Speed ratio	1:0.55	1:0.55
RPM Max.	4000	4000
Tool clamping	Ø6/8/10/12.7/13xØ50	ER16A

IC Internal Coolant BAR · Speeder · Reducer · Adjustable

XD-35N

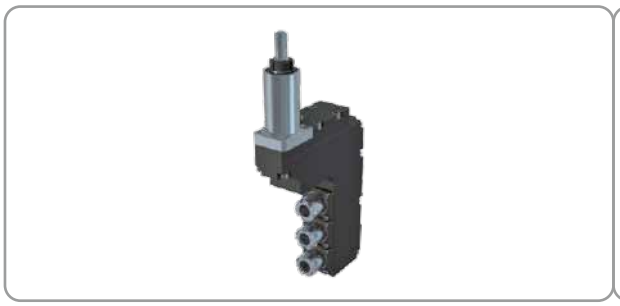

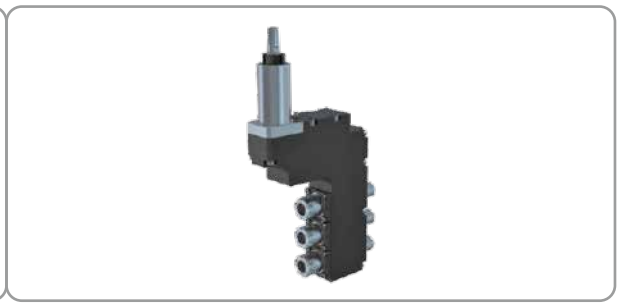

	3-spindle drilling/milling unit	3-spindle double drilling/milling unit
Product No.	HWDA2A3303	HWDA2B3304
Ref. No.	–	–
Speed ratio	1:1	1:1
RPM Max.	6000	6000
Tool clamping	ER16M	ER16M/ER11M

XD-07

	Polygon unit	Polygon unit
Product No.	HWDA400101	HWDA411101
Ref. No.	–	–
Speed ratio	1:1	1:1
RPM Max.	4000	4000
Tool clamping	Ø8	ER11M

XD20V

XD-26H

	Cross drilling/milling unit for sub spindle	Cross drilling/milling unit
Product No.	HWDB316201	HWDA111202
Ref. No.	–	–
Speed ratio	1:1	1:3
RPM Max.	6000	18000
Tool clamping	ER16M	ER11A

IC Internal Coolant BAR · Speeder · Reducer · Adjustable

JSL-32AB/42AB

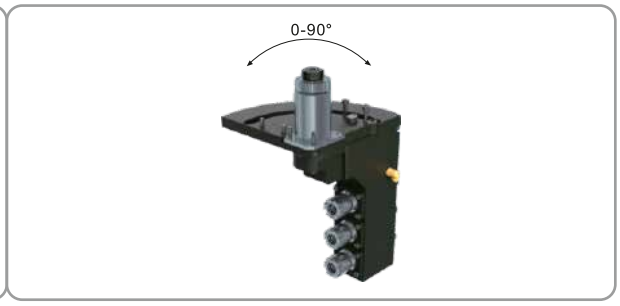

	3-spindle double drilling/milling unit	3-spindle double drilling/milling unit
Product No.	JSSA2B3401	JSSA2B3402
Ref. No.	–	–
Speed ratio	1:1	1:1
RPM Max.	6000	6000
Tool clamping	ER16M/ER11M	ER16M/ER11M

JSL-42RB/RBY

	Thread whirling unit	Slotting unit	Slotting unit	Gear hobbing unit
Product No.	JSSA545401	JSSA712401	JSSA725401	JSSA616401
Ref. No.	–	–	–	–
Speed ratio	1:1	1:0.374	1:0.374	1:1
RPM Max.	6000	4000	4000	6000
Tool clamping	Utilis no.119287	Ø12.7xØ100	Ø25.4xØ110	Ø16xØ40x42

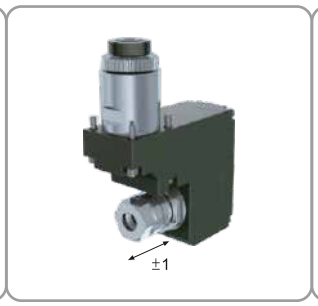

	Drilling/milling unit for sub spindle	Cross drilling/milling unit for sub spindle	Cross drilling/milling unit for sub spindle	Cross drilling/milling unit for sub spindle
Product No.	JSSB120401	JSSB316401	JSSB316403	JSSB316402
Ref. No.	–	–	–	–
Speed ratio	1:1	1:1	1:1	1:1
RPM Max.	8000	4000	6000	6000
Tool clamping	ER20M	ER16A	ER16M	ER16M

IC Internal Coolant BAR · Speeder · Reducer · Adjustable

BMT-45

	Cross drilling/milling unit	Radial drilling/milling unit IC 25bar
Product No.	BM45DS1A0101	BM45DS1B0102
Ref. No.	–	–
Speed ratio	1:1	1:1
RPM Max.	6000	6000
Tool clamping	ER25UM	ER25UM

BMT-55

	Radial drilling/milling unit IC 30bar	Radial drilling/milling unit	Axial drilling/milling unit	Turning holder (cut-off)
Product No.	BM55DS1B0101	BM55DS1B0102	BM55DS1A0101	BM55DS2A2501
Ref. No.	–	–	–	–
Speed ratio	1:1	1:1	1:1	–
RPM Max.	6000	6000	6000	–
Tool clamping	ER25UM	ER25UM	ER25UM	□25

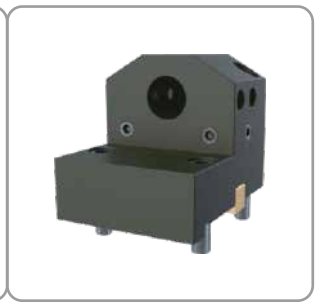

	Turning holder	Turning holder	Boring bar holder	Boring bar holder
Product No.	BM55DS2A2503	BM55DS2A2502	BM55DS2D1501	BM55DS2D1502
Ref. No.	–	–	–	–
Speed ratio	–	–	–	–
RPM Max.	–	–	–	–
Tool clamping	□25	□25	Ø25	Ø25

IC Internal Coolant BAR · Speeder · Reducer · Adjustable

BMT-65

	Cross drilling/milling unit IC 25bar	Radial drilling/milling unit IC 25bar
Product No.	BM65DS1A0102	BM65DS1B0104
Ref. No.	–	–
Speed ratio	1:1	1:1
RPM Max.	6000	6000
Tool clamping	ER32	ER32

	Radial drilling/milling unit IC 25bar
Product No.	BM65DS1B0101
Ref. No.	–
Speed ratio	1:1
RPM Max.	6000
Tool clamping	ER32

IC Internal Coolant BAR · Speeder · Reducer · Adjustable

WT-150, AS-200 (BMT-55)



	Axial drilling/milling unit	Radial drilling/milling unit	Turning holder (cut-off)
Product No.	BM55NK1A0101	BM55NK1B0101	BM55NK2A2001
Ref. No.	–	–	–
Speed ratio	1:1	1:1	–
RPM Max.	6000	6000	–
Tool clamping	ER25UM	ER25UM	□20

WT-100, WY-100 (BMT-44)


	Turning holder	Turning holder
Product No.	BM44NK2A2001	BM44NK2B2001
Ref. No.	–	–
Speed ratio	–	–
RPM Max.	–	–
Tool clamping	□20	□20


	Boring bar holder	Boring bar holder
Product No.	BM44NK2D1501	BM44NK2D2501
Ref. No.	–	–
Speed ratio	–	–
RPM Max.	–	–
Tool clamping	Ø25	Ø25

IC Internal Coolant BAR · Speeder · Reducer · Adjustable

GLS1500Y/GTW1500Y

	Sub Spindle Boring Bar Holder	Sub Spindle Boring Bar Holder
Product No.	GDTB82Q220	GDTB82Q225
Ref. No.	–	–
Speed ratio	–	–
RPM Max.	–	–
Tool clamping	Ø20	Ø25

SW32

	Cross drilling/milling unit	3-spindle drilling/milling unit	Drilling/milling unit for sub spindle	Drill holder for sub spindle
Product No.	GDWA120301	GDWA2A3301	GDWB120301	GDWB81Q301
Ref. No.	LL-30U4A-A00	–	–	–
Speed ratio	1:1	1:1	1:1	–
RPM Max.	6000	8000	6000	–
Tool clamping	ER20	ER20M	ER20M	ER20M

SW32II

SW20

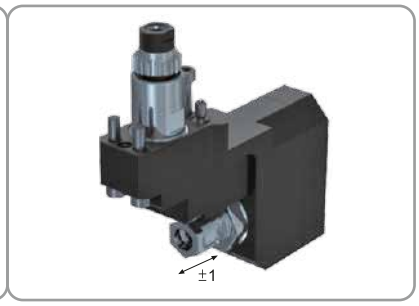

	Cross drilling/milling unit for sub spindle	Drill holder for sub spindle	Cross drilling/milling unit for sub spindle
Product No.	GDWB316301	GDWB81Q201	GDWB311201
Ref. No.	–	LC-3004	–
Speed ratio	1:1	–	1:1
RPM Max.	6000	–	4000
Tool clamping	ER16M	ER16M	ER11A

IC Internal Coolant BAR · Speeder · Reducer · Adjustable

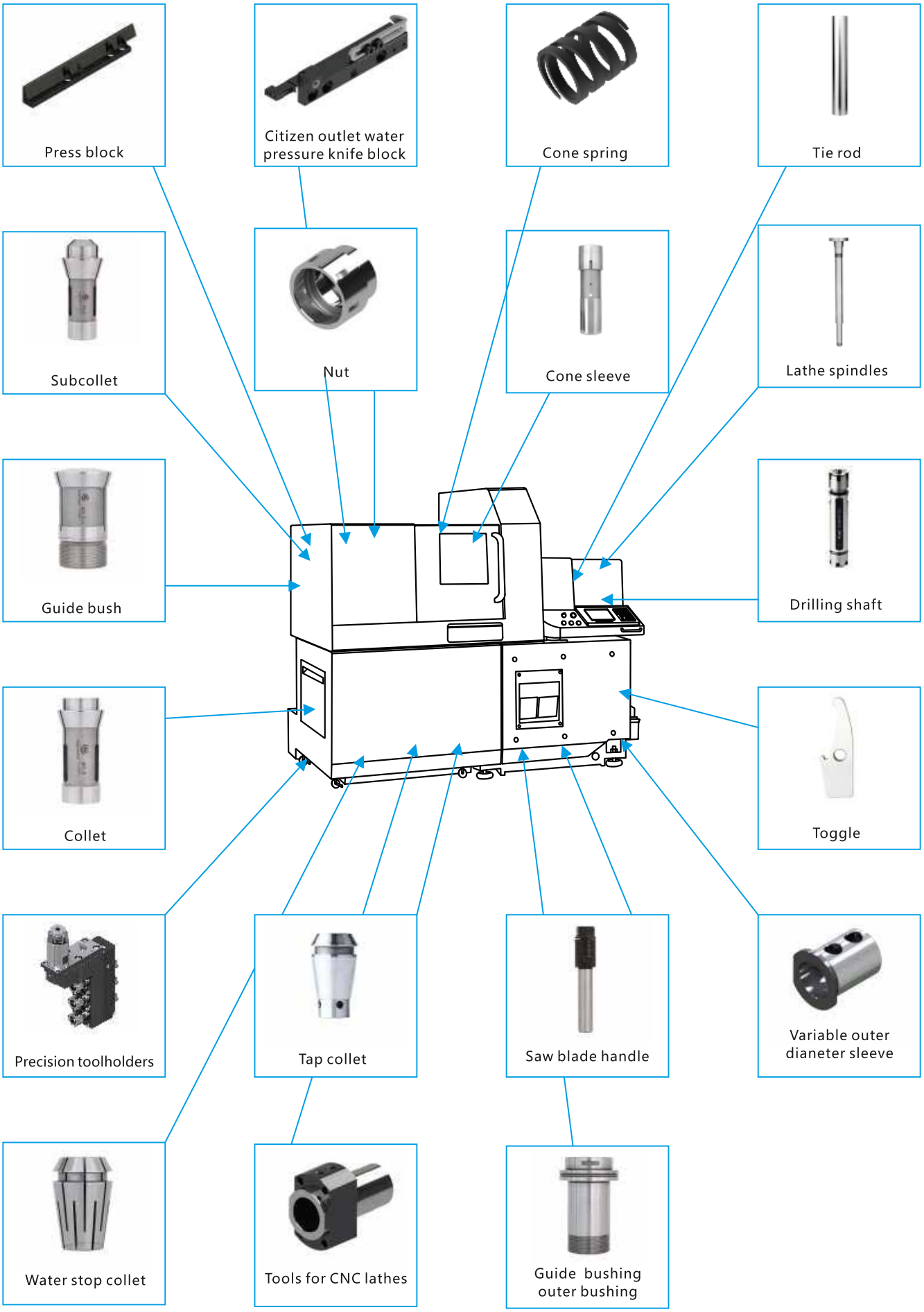
Press block
Citizen outlet water pressure knife block
Cone spring
Tie rod
Subcollet
Nut
Cone sleeve
Lathe spindles
Guide bush
Drilling shaft
Collet
Toggle
Precision toolholders
Tap collet
Saw blade handle
Variable outer dianeter sleeve
Water stop collet
Tools for CNC lathes
Guide bushing outer bushing

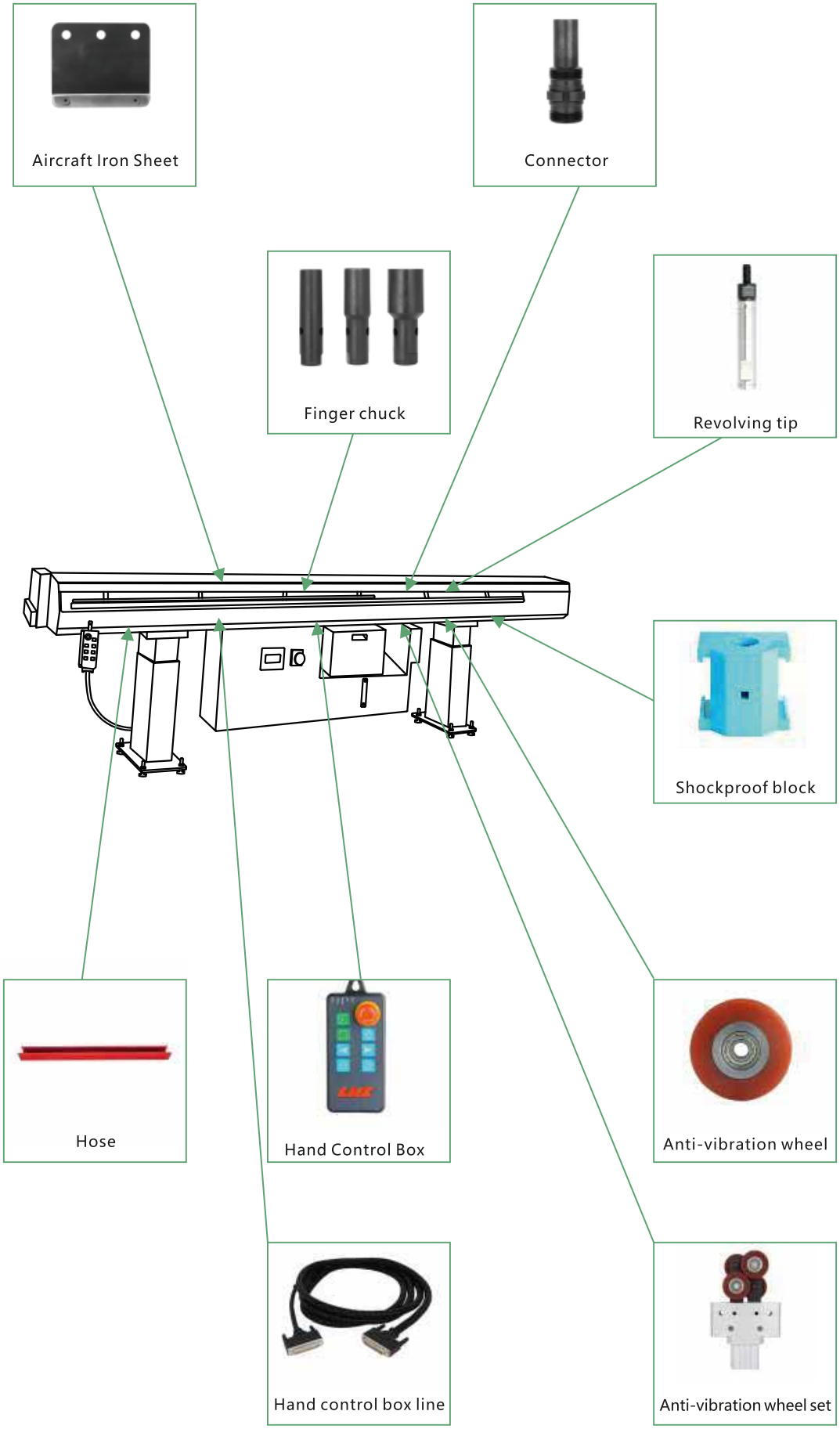
Aircraft Iron Sheet
Connector
Finger chuck
Revolving tip
Shockproof block
Hose
Hand Control Box
Anti-vibration wheel
Hand control box line
Anti-vibration wheel set

Front side milling straight shank rotary tool holder

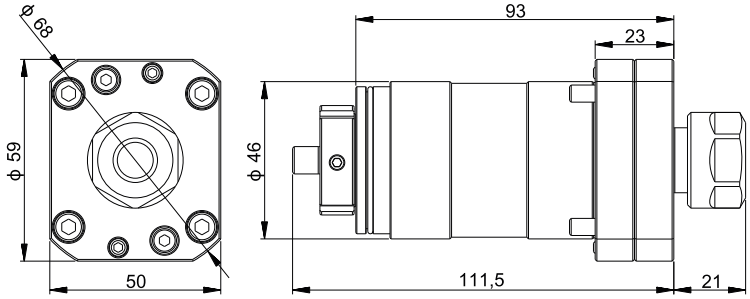

Model	TSUGAMI Number	Speed Ratio	Max rpm	Shank	Aperture	Use Collet
3268–T051	3268–T051	1:1	6000rpm	46	10.0	ER16

Back straight shank rotary tool holder

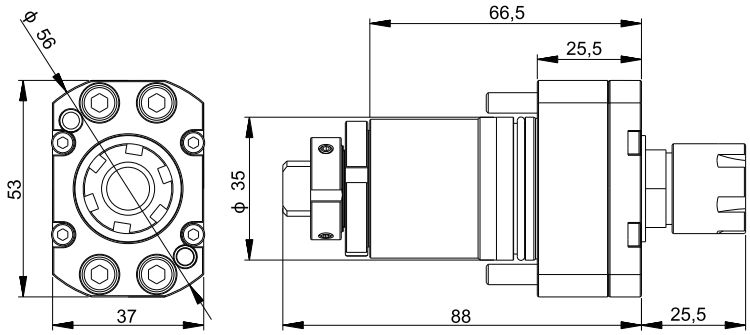

Model	TSUGAMI Number	Speed Ratio	Max rpm	Shank	Aperture	Use Collet
3281–S080	3281–S080	1:1	8000rpm	35	10.0	ER16

Back straight shank rotary tool holder

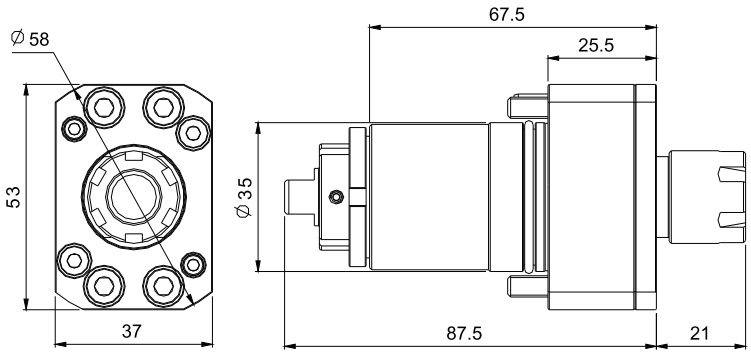

Model	TSUGAMI Number	Speed Ratio	Max rpm	Shank	Aperture	Use Collet
3281–Z79098	3281–Z79098	1:1	8000rpm	35	10.0	ER16

Front side milling straight shank rotary tool holder

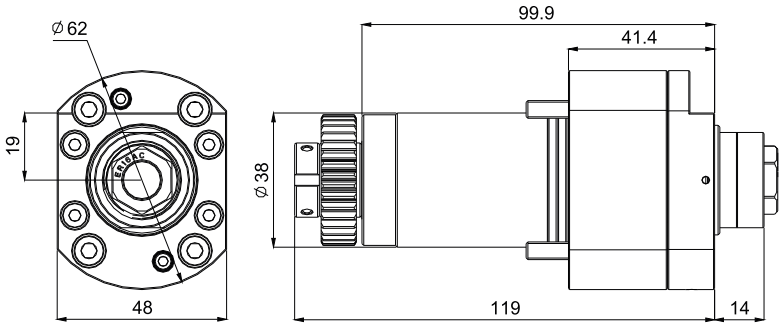

Model	TSUGAMI Number	Speed Ratio	Max rpm	Shank	Aperture	Use Collet
3281–Z74045–0100	3281–Z74045–0100	1:1	6000rpm	38	10.0	ER16

Back straight shank rotary tool holder

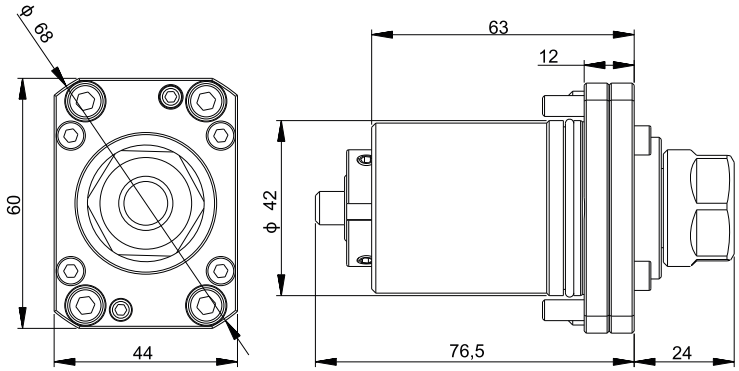

Model	TSUGAMI Number	Speed Ratio	Max rpm	Shank	Aperture	Use Collet
3282–Y041	3282–Y041	1:1	6000rpm	42	10.0	ER16

Back straight shank rotary tool holder

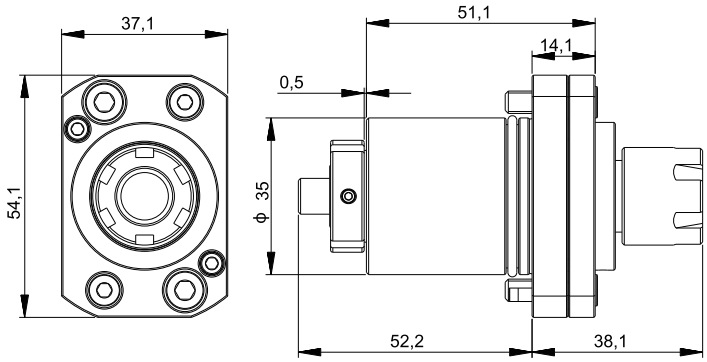

Model	TSUGAMI Number	Speed Ratio	Max rpm	Shank	Aperture	Use Collet
3220–Y7072	3220–Y7072	1:1	6000Rpm	35	10.0	ER16

Front 2-axis bidirectional power seat

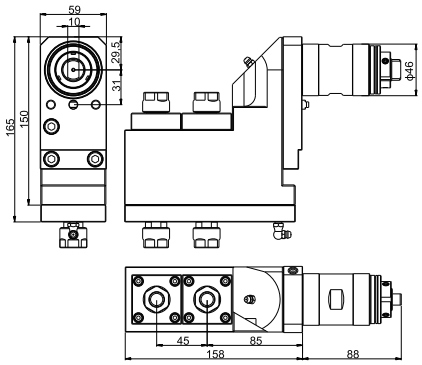

Model	TSUGAMI Number	Speed Ratio	Max rpm	Shank	Aperture	Use Collet
3282-Y901	3282-Y901	1:1	6000rpm	46	10.0	ER16

Back side milling one-way power seat

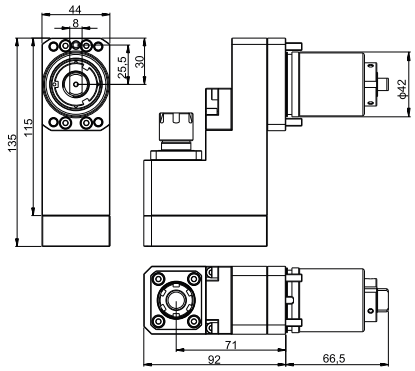

Model	TSUGAMI Number	Speed Ratio	Max rpm	Shank	Aperture	Use Collet
3290-Y041	3290-Y041	1:1	6000Rpm	42	10.0	ER16

Back side milling one-way power seat

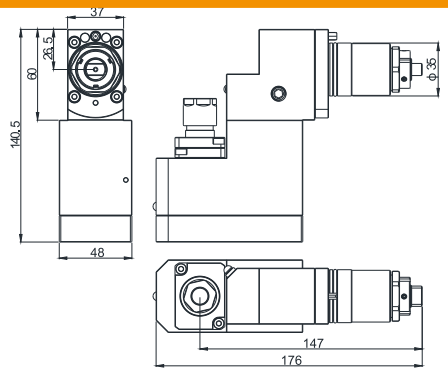

Model	TSUGAMI Number	Speed Ratio	Max rpm	Shank	Aperture	Use Collet
3281-Y461-9010	3281-Y461-9010	1:1	8000rpm	35	10.0	ER16

Reducer sleeve (center outlet)

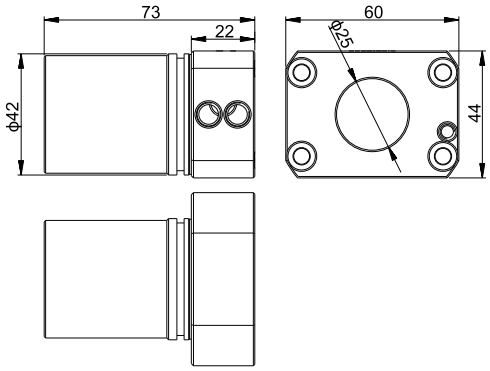

Model	TSUGAMI Number	Speed Ratio	Max rpm	Shank	Aperture	Use Collet
3282-Y212	3282-Y212	/	/	42	25.0	/

Back drilling seat

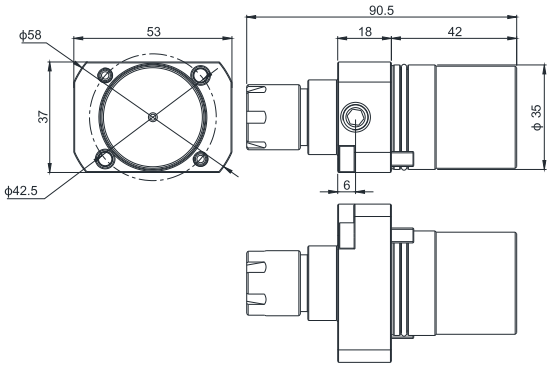

Model	TSUGAMI Number	Speed Ratio	Max rpm	Shank	Aperture	Use Collet
3282-Z71051-9010	3282-Z71051-9010	/	/	35	10.0	ER16

Reducing sleeve

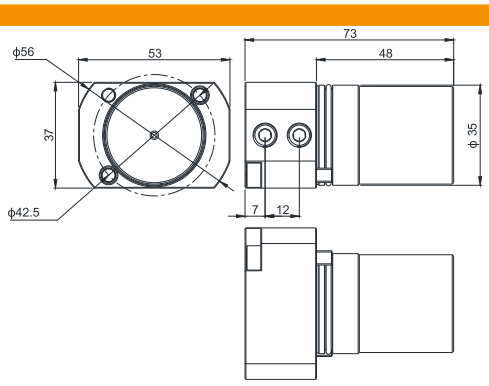

型號 Model	津上編號 TSUGAMI Number	轉速比 Speed Ratio	最高轉速 Max rpm	柄徑 Shank	孔徑 Aperture	使用筒夾 Use Collet
3281-Z79055-0302	3281-Z79055-0302	/	/	35	20.0	/

TSUGAMI 20# synchronous rotary guide sleeve seat

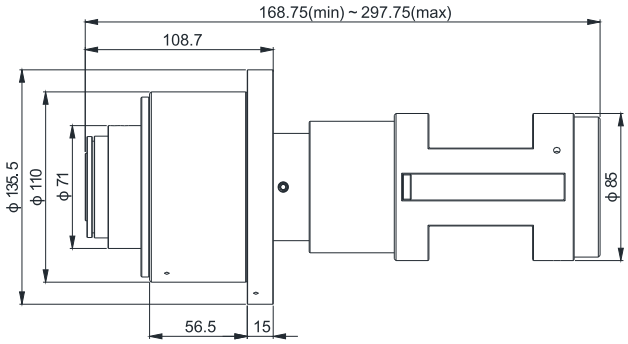

Model	Outer Diameter
津上20#同步迴轉導套座	110

TSUGAMI 20# spindle pressure cap

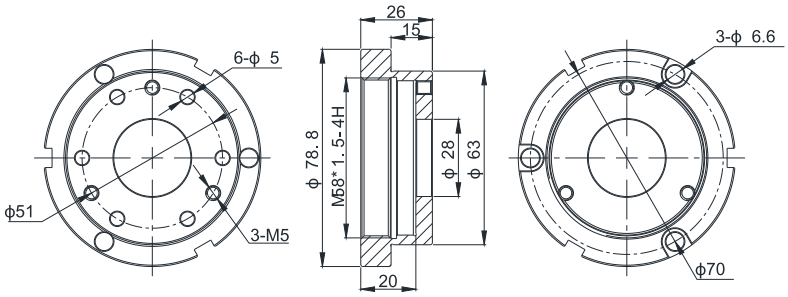

Model	Thread	Aperture
津上20#主軸壓帽	M58x1.5-4H	28.0

Side milling straight shank rotary tool holder

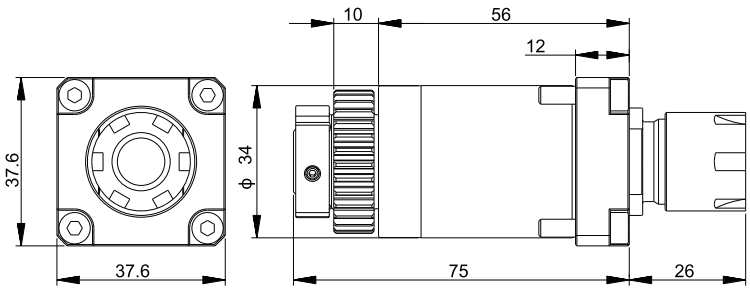

Model	STAR Number	Speed Ratio	Max rpm	Shank	Aperture	Use Collet
33150	33150	1:1	8000rpm	34	10.0	ER16

Back straight shank rotary tool holder

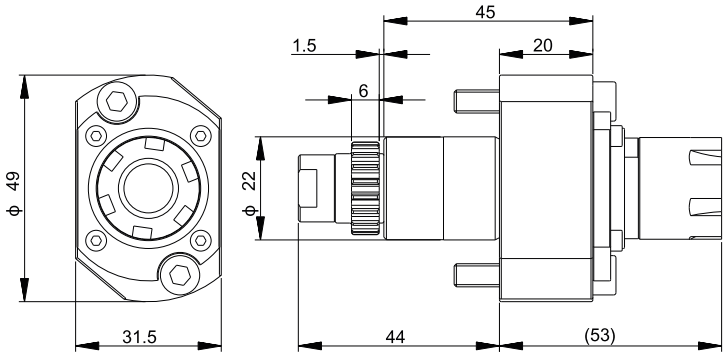

Model	STAR Number	Speed Ratio	Max rpm	Shank	Aperture	Use Collet
57161	57161	1:1	6000rpm	22	10.0	ER16

Front 3-axis one-way power seat

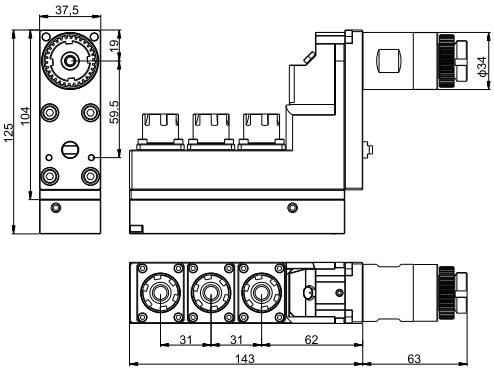

Model	STAR Number	Speed Ratio	Max rpm	Shank	Aperture	Use Collet
66151	66151	1:1	6000rpm	34	10.0	ER16

Front 3-axis bidirectional power seat

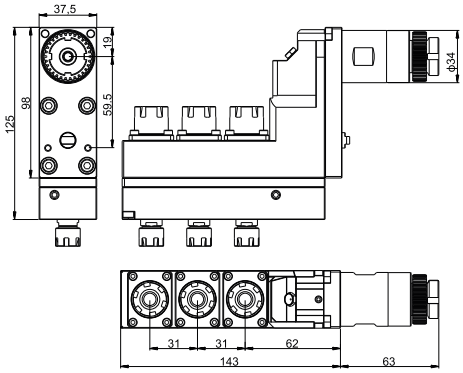

Model	STAR Number	Speed Ratio	Max rpm	Shank	Aperture	Use Collet
67161	67161/OM155	1:1	6000Rpm	34	10.0/7.0	ER16/ER11

Back drilling seat

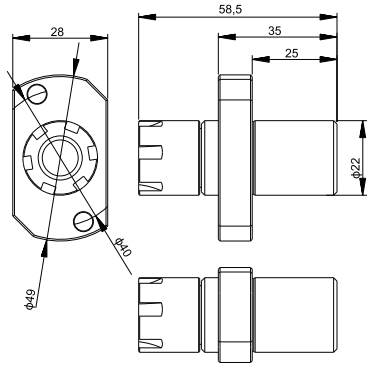

Model	STAR Number	Speed Ratio	Max rpm	Shank	Aperture	Use Collet
54121-01	54121-01	/	/	22	10.0	ER16

Back drilling seat

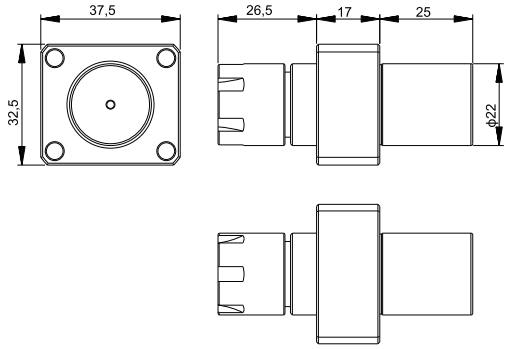

Model	STAR Number	Speed Ratio	Max rpm	Shank	Aperture	Use Collet
0R122	0R122	/	/	22	10.0	ER16

Back drilling seat (center water outlet)

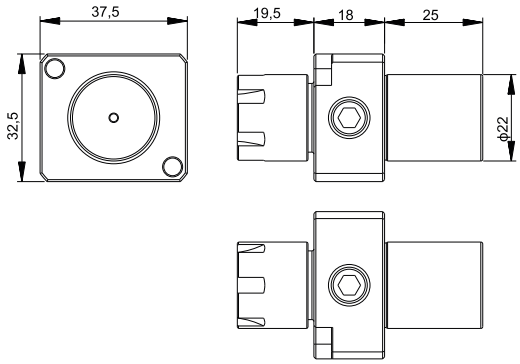

Model	STAR Number	Speed Ratio	Max rpm	Shank	Aperture	Use Collet
0R123	0R123	/	/	22	10.0	ER16

Back drilling seat (center water outlet)

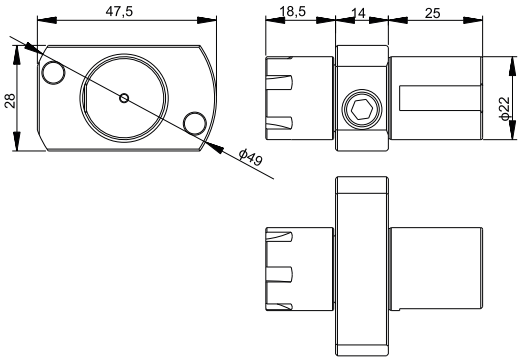

Model	STAR Number	Speed Ratio	Max rpm	Shank	Aperture	Use Collet
67127	67127	/	/	22	10.0	ER16

Back side fixed knife holder (center water outlet)

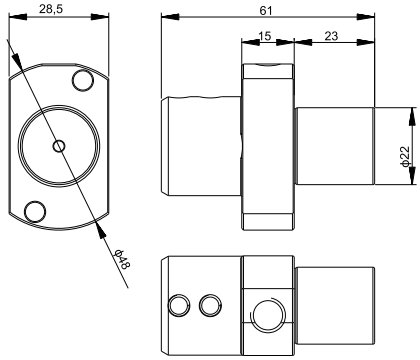

Model	STAR Number	Speed Ratio	Max rpm	Shank	Aperture	Use Collet
B2E22	B2E22	/	/	22	3/4/5/6/8/10/12/16	/

Front 3 holes/drilling seat

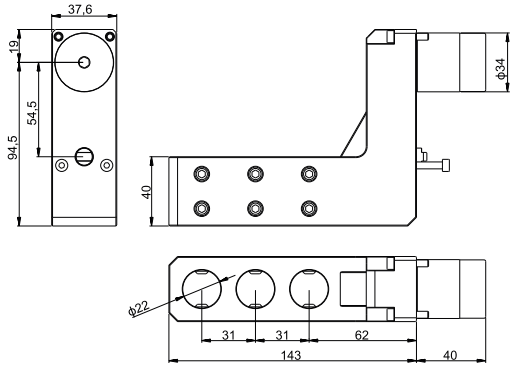

Model	STAR Number	Speed Ratio	Max rpm	Shank	Aperture	Use Collet
STAR34322	STAR34322	/	/	34	22	/

STAR20# back axis rotary punching tool holder

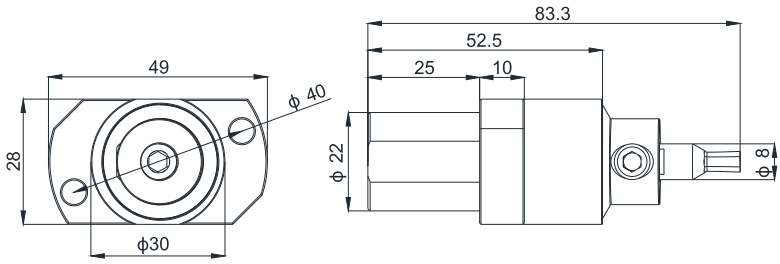

Model	Shank
STAR20#背軸旋轉沖削刀柄	22

Back rotary cutterbed

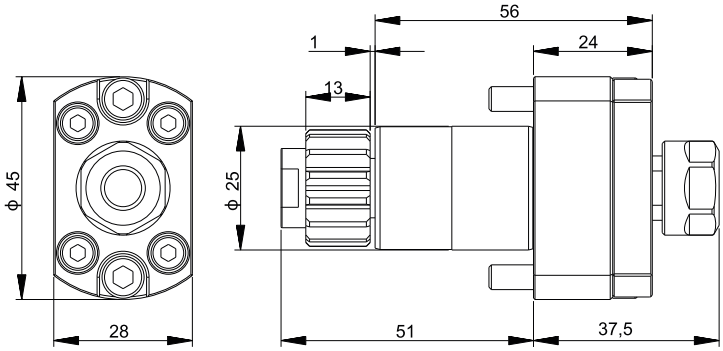

Model	CITIZEN Number	Speed Ratio	Max rpm	Shank	Aperture	Use Collet
MSC507	MSC507	1:1	10000rpm	25	7.0	ER11

Front 3-axis bidirectional power seat

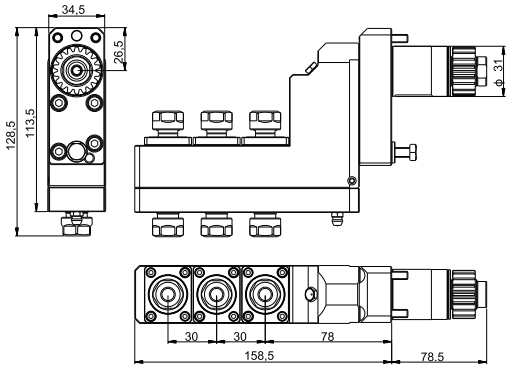

Model	CITIZEN Number	Speed Ratio	Max rpm	Shank	Aperture	Use Collet
BSE707	BSE707	1:1	6000rpm	31	7.0	ER11

Reducing sleeve

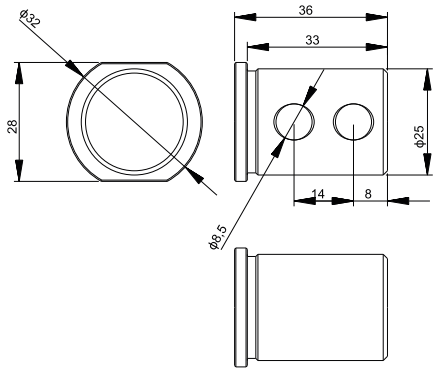

Model	CITIZEN Number	Speed Ratio	Max rpm	Shank	Aperture	Use Collet
SAU819	SAU819	/	/	25	19.05	/

Reducing sleeve

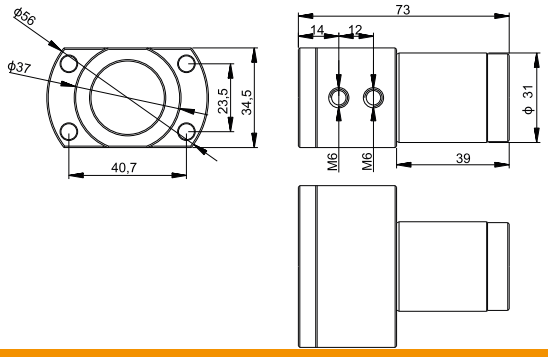

Model	CITIZEN Number	Speed Ratio	Max rpm	Shank	Aperture	Use Collet
SAU825	SAU825	/	/	31	25.4	/

Back drilling seat (center water outlet)

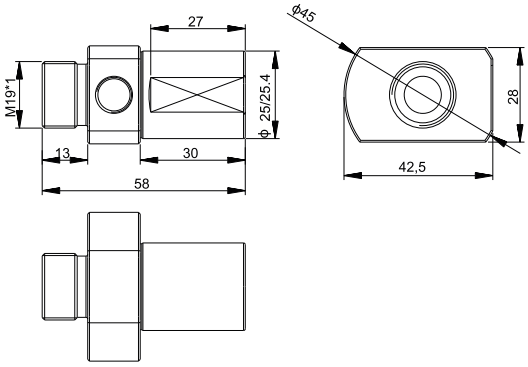

Model	CITIZEN Number	Speed Ratio	Max rpm	Shank	Aperture	Use Collet
GDE1025/GDE10254	/	/	/	25/25.4	10.0	/

Front 3 Holes/drilling seat

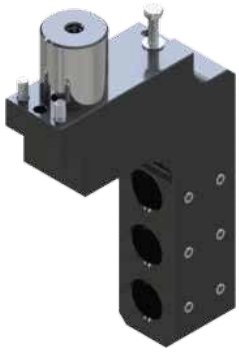

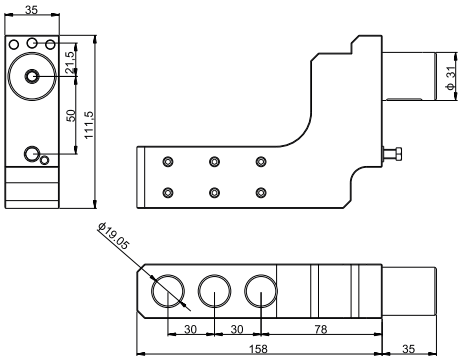

Model	CITIZEN Number	Speed Ratio	Max rpm	Shank	Aperture	Use Collet
GDF1207	GDF1207	/	/	31	19.05	/

Front 4 Holes/drilling seat

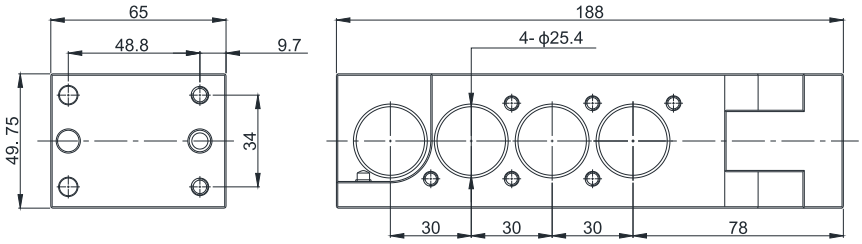

Model	CITIZEN Number	Speed Ratio	Max rpm	Shank	Aperture	Use Collet
GDF1801	GDF1801	/	/	/	25.4	/

Rotary punching tool holder

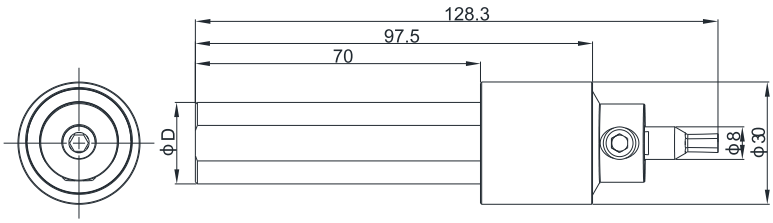

Model	Shank
旋轉沖削刀柄	16/19.05/20/22/25/25.4

Floating reamer holder

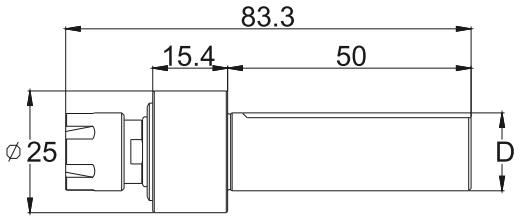

Model	Shank diameter	Use collet
C16-ER11M	16	ER-11
C19.05-ER11M	19.05	ER-11
C20-ER11M	20	ER-11
C22-ER11M	22	ER-11
C25-ER11M	25	ER-11
C25.4-ER11M	25.4	ER-11

Floating reamer holder

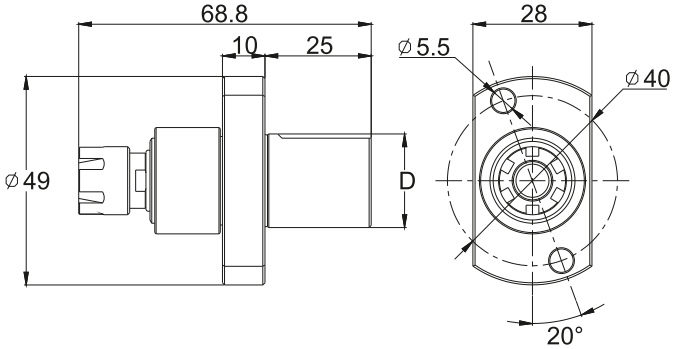

Model	Applicable models	Shank diameter	Use collet
C22-ER11M	SR-20R/SR-SR-20R/SR-20J/SR-20RIV/SR-32J20J/SR-20RIV/SR-32J	22	ER-11

Floating reamer holder

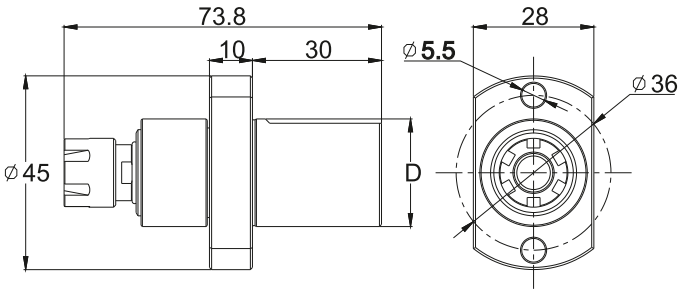

Model	Applicable models	Shank diameter	Use collet
C25-ER11M	L12VII/L20E/L20X/L20XII	25	ER-11

Accuracy measure

Collet round

D	端口/Outlet space	檢測長度(L)	AAA級
1.0~1.5	0.002	6	0.003
1.5~3.0	0.002	10	0.003
3.0~6.0	0.002	16	0.003
6.0~13.0	0.002	25	0.003
14.0~20.0	0.002	30	0.005

Collet round

D	端口/Outlet space	檢測長度(L)	AA級
1.0~1.5	0.002	6	0.008
1.5~3.0	0.002	10	0.008
3.0~6.0	0.002	16	0.008
6.0~9.9	0.002	25	0.008
10~20.0	0.002	30	0.012

Gudie bush round

D	端口/Outlet space	檢測長度(L)	AAA級
1.0~1.5	0.002	6	0.003
1.5~3.0	0.002	10	0.003
3.0~6.0	0.002	16	0.003
6.0~13.0	0.002	25	0.003
14.0~20.0	0.002	30	0.005

Gudie bush round

D	端口/Outlet space	檢測長度(L)	AA級
1.0~1.5	0.002	6	0.005
1.5~3.0	0.002	10	0.005
3.0~6.0	0.002	16	0.005
6.0~9.9	0.002	25	0.005
10~20.0	0.002	30	0.008

Collet inner hole option

CC01

Smooth

CC02

Grooves

CC03

Powerful

CC04

Extended subcollet

CC05

Square

CC06

Rectangle

CC07

Hexagon

CC08

Special shape

CC09

With seal

CC10

V groove

CC11

S-shaped groove

CC12

Vertebral positioning groove

CC13

Small d positioning groove

CC14

Jump

CC15

POM

CC16

Copper bushing with inner hole at tail end

Other collets

Elastic change outer diameter collet

Elastic change outer diameter collet

Customized collet

Customized collet

Emergency collet

Internal expansion collet

Internal expansion collet

Internal expansion collet

Internal expansion collet

Pneumatic diaphragm claw

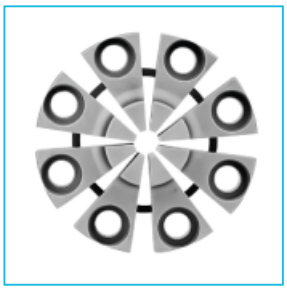

Pneumatic diaphragm claw

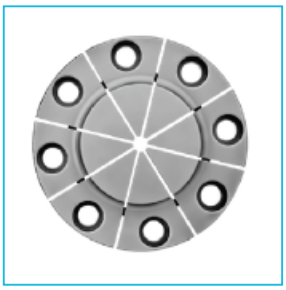

Pneumatic diaphragm claw

Swiss-made pen machine cutter head

Special double-sided clamping collet

Jumping collet

Copper collet

Headstock collets for lathes

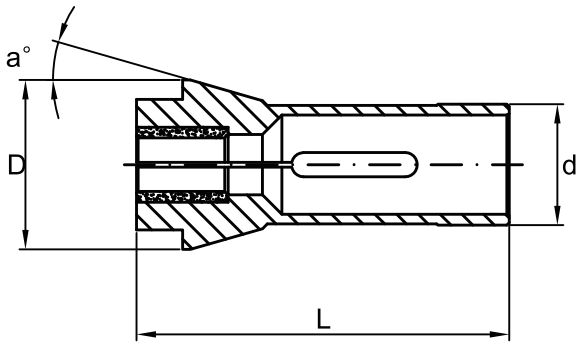

Machines	Type	Item No	d	L	D	Article No			
CITIZEN	R04	3204	ø 8.0	36	ø 11.5				
	R07,D/F/G/L-10	3910	ø 15.0	64	ø 21.0	F15/580	120E	TF15	40.003
	B12,F12	3212	ø 16.0	64	ø 21.0				
	D/E/F/L/M-16,E/F/L/M-20	3720	ø 25.0	77	ø 35.0	D25/64	145E	TF25	
	L16/20,F16/20,M16,G20,E20	3216	ø 26.0	67	ø 36.0				511.001
	F25,L25,E25,E25J	3225	ø 30.0	78	ø 42.0				
	L32,M32,E32,G32	3232	ø 37.0	92	ø 47.0				
STAR	SW7,SW10,JNC10,RNC10,SNC10	3910	ø 15.0	64	ø 21.0	F15/580	120E	TF15	40.003
	SE12,S13,VNC12,SJ15	3512	ø 18.0	64	ø 25.0				
	SB16	3616	ø 20.0	67	ø 26.0				
	RNC16,SE16,SR16,SH16	3516	ø 20.0	67	ø 28.0	F20/87	138E	TF20	40.004
	JNC16, VNC20	3520	ø 24.0	65.5	ø 32.0				
	KNC16/20,SR20,VNC20	3720	ø 25.0	77	ø 35.0				
	JNC16, ZNC16,VNC20	3216	ø 26.0	67	ø 36.0				
	KJR25,SCN25	3725	ø 30.0	80	ø 42.0	F30/63	157E	TF30	40.006
	JNC32/25,VNC32,MR32	3932	ø 37.0	92	ø 47.0				
TSUGAMI	T7,BOO7,BM07	3707	ø 10.0	46	ø 16.0	F10/1178	111E		140.001
	L10	3710	ø 14.0	47	ø 20.0				
	NT-11,NP-11	3910	ø 15.0	64	ø 21.0	F15/580	120E	TF15	40.003
	BO12	3616	ø 20.0	67	ø 26.0			S16-HMS	
	NP-17,NP-16,NT-17	3717	ø 23.8	62	ø 28.0			S20-HM	
	NP-20,BS20,BO18,BS18	3721	ø 28.0	77	ø 35.0				
	BA-26L	3726	ø 33.0	80	ø 40.0			S25-HM	
	S-25,BS-26	3725	ø 30.0	80	ø 42.0				
	NP-32	3232	ø 37.0	92	ø 47.0				
	BH38	3738	ø 43.0	92	ø 53.0	F43		TF43	511.024
	BH38(SUB)	3739	ø 48.0	100	ø 54.0	F48		BS38	511.028

Machines	Type	Item No	d	L	D	Article No			
NOMURA	NSP8410,NSP8420	3608	ø 12.0	58	ø 18.0				
	NSP1053,NN10K	3610	ø 16.0	50.5	ø 22.0				90.015
	NSP1653,NSP1253	3616	ø 20.0	68	ø 26.0				
	NN20KF	3216	ø 26.0	67	ø 36.0				511.001
	P-23	3623	ø 29.0	72	ø 39.0				
	NNCP2553,NN25K	3625	ø 32.0	84.5	ø 42.0				
	P-32	3632	ø 42.0	86	ø 52.0				
TORNOS	M4,T4,TV	3904	ø 8.0	42	ø 12.0	F8/577	101E	TF8	40.001
	M7	3907	ø 10.0	47.5	ø 15.5	F10/86	109E	TF10	40.002
	MS7	3108	ø 13.0	64	ø 19.0	F13/357	116E	TF13	40.016
	R10,M10	3910	ø 15.0	64	ø 21.0	F15/580	120E	TF15	40.003
	R125	3912	ø 16.0	64	ø 21.0		1212E	TF16	40.012
	R16,M15	3516	ø 20.0	67	ø 28.0	F20/87	138E	TF20	40.004
	RR20,R20,M20	3920	ø 25.0	77	ø 35.0	F25/64	145E	TF25	40.005
	M25	3925	ø 30.0	80	ø 42.0	F30/63	157E	TF30	40.006
	MR32,TBM32	3932	ø 37.0	92	ø 47.0	F37/740	1536E	TF37	40.008
-DECO TORNOS-DECO	DECO 7	3907	ø 10.0	47.5	ø 15.5	F10/86	109E	TF10	40.002
	DECO 10	3910	ø 15.0	64	ø 21.0	F15/580	120E	TF15	40.003
	DECO 13	3912	ø 16.0	64	ø 21.0		1212E	TF16	40.012
	DECO 13/16	3816	ø 20.0	54	ø 26.0	F20/201	136E	F20/201	225.003
	DECO 20, DELTA 12/20	3920	ø 25.0	77	ø 35.0	F25/64	145E	TF25	40.005
	DECO 26, SIGMA 20	3826	ø 30.0	65	ø 38.0	F30/101	1446E	O161	90.009
	DECO 32	3932	ø 37.0	92	ø 47.0	F37/740	1536E	TF37	40.008
HANWHA	HANEX11,SL12	3912	ø 16.0	64	ø 21.0				
	HANEX17,ML18-G	2215	ø 22.0	55	ø 30.0	F22/71	140E		
	HANEX20	3920	ø 25.0	77	ø 35.0	F25/64	145E	TF25	
	HANEX25	3425	ø 32.0	79	ø 45.0				
	SL-32	3932	ø 37.0	92	ø 47.0	F37/740	1536E	TF37	
	SL-35	3435	ø 40.0	92	ø 49.0				
	SL-35HP-II,SUB	3436	ø 40.0	92	ø 50.0				
	SL-38HP-II	3438	ø 44.0	94	ø 52.0				
HARDINGE	SL,ST220	3920	ø 25.0	77	ø 35.0	F25/64	145E	TF25	
	ST225	3925	ø 30.0	80	ø 42.0	F30/63	157E	TF30	
DMG	GMC20	3320	ø 25.0	77	ø 35.0				
POLYGYM	DIAMOND 12,12CS	3212	ø 16.0	64	ø 21.0				
	DIAMOND 16,16CS	3616	ø 20.0	68	ø 26.0				
	DIMOAND 20,20B,20CS,20CSB	3216	ø 26.0	67	ø 36.0				511.001
	DIMOAND 25,25B,25CS,25CSB	3225	ø 30.0	78	ø 42.0				
	DIMOAND 32,32b,32CS,32CSB	3232	ø 37.0	92	ø 47.0				
	DIMOAND SY-42	2242	ø 48.0	94	ø 60.0	F48/81	173E	TF48	231.009
JINN FA	JSL-20	3721	ø 28.0	77	ø 35.0				
	JSL-26	3726	ø 33.0	80	ø 40.0				
	JSL-32	3232	ø 37.0	92	ø 47.0				511.001
WANG TZYY	SL-1693	3616	ø 20.0	68	ø 26.0				
	SL-2596	3225	ø 30.0	78	ø 42.0				
	SL-3295	3232	ø 37.0	92	ø 47.0				

Push-Type collets

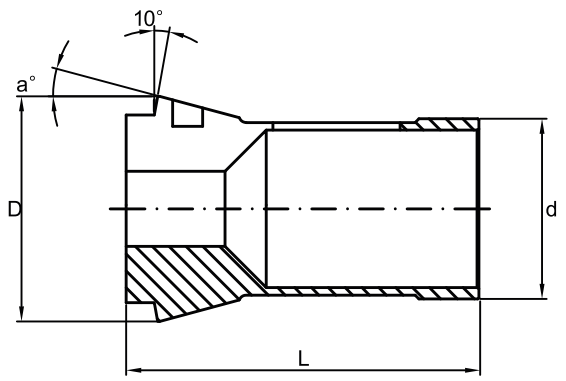

Machines	Type	Item No	d	L	D	DIN No	Schau No	NEU No
MIYANO	BNC20	1721	ø 27.0	73	ø 38.0			
	BNC34	1734	ø 44.4	108	ø 54.2			
	148E	1220	ø 28.0	70	ø 38.0		F28/39	231.004
	161E	1225	ø 32.0	75	ø 45.0	6343-32	F32/221	231.005
	164E	1232	ø 38.1	108	ø 49.0		F38/72	
	171E	1236	ø 42.0	94	ø 55.0	6343-42	F42/99	231.007
	173E	1242	ø 48.0	94	ø 60.0	6343-48	F48/81	231.009
	177E	1252	ø 58.0	94	ø 70.0			
CC	洽群32#(164E)	1232	ø 38.1	108	ø 49.0		F38/72	
	洽群36#(171E)	1236	ø 42.0	94	ø 55.0	6343-42	F42/99	231.007
	洽群42#(173E)	1242	ø 48.0	94	ø 60.0	6343-48	F48/81	231.009
	洽群52#(177E)	1252	ø 58.0	94	ø 70.0			
LICO	利高32#(164E)	1232	ø 38.1	108	ø 49.0		F38/72	
	利高42#(173E)	1242	ø 48.0	94	ø 60.0	6343-48	F48/81	231.009
	利高52#(177E)	1252	ø 58.0	94	ø 70.0			
RIKEN	SAD-25	1721	ø 30.0	66	ø 43.0			
	SAD-40	1742	ø 48	84	ø 66.0			
	SAD-50	1750	ø 56.0	94	ø 68.0			
	SAD-65	1765	ø 75.0	100	ø 93.0			
INDEX	INDEX#36	1236	ø 42.0	94	ø 55.0	6343-42	F42/99	231.007
	INDEX#42	1242	ø 48.0	94	ø 60.0	6343-48	F48/81	231.009
	INDEX#52	1252	ø 58.0	94	ø 70.0			
	INDEX#60	1261	ø 66.0	110	ø 84.0	6343-60	F66/359	231.001
TRAUB	TRAUB A-15	1215	ø 22.0	55	ø 30.0	6343-22	F22/71	
	TRAUB A-20	1220	ø 28.0	70	ø 38.0		F28/93	231.004
	TRAUB A-25	1225	ø 32.0	75	ø 45.0	6343-32	F32/221	231.005

Schaublin sharpening machine collet

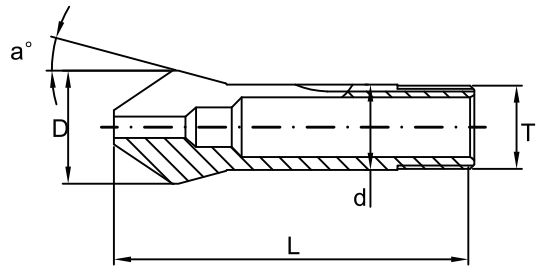

Machines	Type	Item No	d	L	D
Schaublin	B8	72-137	ø6	31.3	ø10.5
	W10	80-1	ø10	43.6	ø14
	W15	80-3	ø15.0	58.3	ø 20.2
	W20	80-4	ø20.0	73	ø 26.3
	W20	80-107	ø20.0	73	ø 26.3
	W20	80-92744	ø20.0	84.5	ø 26.3
	W25	80-5	ø25.0	97.6	ø 33.7

Rubber collet

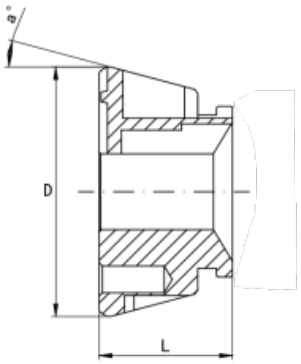

Machines	Type	L	D	a°
Rubber collet	RC32	44	57.7	12°
	RC32N	49	57.7	12°
	RC42S	42	79.3	15°
	RC42N	47	79.3	15°
	RC52S	46	79.2	15°
	RC52N	46	79.2	15°
	RC65S	53	99.5	15°
	RC65N	58	99.5	15°
	RC80S	53	114.5	15°
	RC80N	53	114.5	15°
	RC100S	59	144.5	15°
	RC100N	59	144.5	15°
	RC120S	61	180	15°
	RC120N	61	180	15°

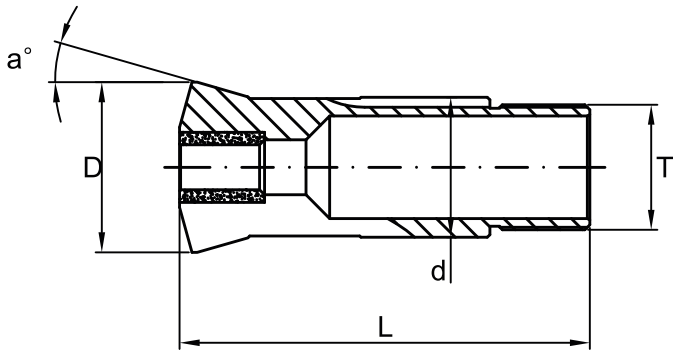

Machines	Type	Item No	d	L	D	T	Article No		
CITIZEN	R04	5204	ø 9.0	38.5	ø 12.5	M8X0.75		263.001	
	R07	5907	ø 11.0	52	ø 14.5	M10X0.75	3134E	3.001	TD-7
	D10,E10,F10,L10	5910	ø 16.0	59	ø 20.5	M14X1.0	3260E	8.001	TD10
	B12,F12,C12,A12	5212	ø 18.0	60	ø 22.0	M18X1.0	3319E	174.001	SD125R
	B20,M20,L20	5920	ø 28.0	82	ø 34.0	M25X1.0	3602E	22.001	TD25S
	L16/20,F16/F20,E20,WF6,206M	5216	ø 30.0	59	ø 35.0	M30X1.0		510.001	
	F25,L25,E25,E25J	5725	ø 34.0	87.5	ø 41.0	M34X1.0	3733E	451.001	CD25
	L32,M32,G32,E32	5232	ø 42.0	82	ø 48.0	M40X1.0		28.01	TD32
STAR	SW-7	5907	ø 11.0	52	ø 14.5	M10X0.75	3134E	3.001	TD-7
	JNC-10,RNC-10,SNC-10	5910	ø 16.0	59	ø 20.5	M14X1.0	3260E	8.001	TD10
	SE12,VNC12,SJ15,SNC15	5512	ø 21.0	58	ø 24.0	M18X1.0	3438E	450.001	SNC15
	SB16,SR16	5616	ø 22.0	70.5	ø 26.0	M20X1.0		487.001	P1653D
	RNC16,SE16,SA16,VNC16,KNC16	5516	ø 22.0	68	ø 29.0	M22X1.0			
	SA-16,SR-16	5916	ø 22.0	68	ø 29.0	M22X1.0	3455E	39.001	TD20R
	SR20,KNC16,VNC20	5920	ø 28.0	82	ø 34.0	M25X1.0	3602E	22.001	TD25S
	JNC16,L16/20,ZNC16,VNC20	5216	ø 30.0	59	ø 35.0	M30X1.0		510.001	
	SCN-25,KJR-25	5725	ø 34.0	87.5	ø 41.0	M34X1.0	3733E	451.001	CD25
	JNC32/25,VNC32/25,MR32,SR32	5532	ø 42.0	82	ø 49.0	M40X1.0	3827E	28.001	TD32S
TSUGAMI	NP-4W	5907	ø 11.0	52	ø 14.5	M10X0.75	3134E	3.001	TD-7
	T7,BOO7,BM07	5707	ø 12.0	52	ø 15.8	M12X1.0	3149E	261.001	
	L10	5710	ø 15.0	54	ø 19.0	M14X1.0			
	NT-11,NP-11	5212	ø 18.0	60	ø 22.0	M18X1.0	3319E	174.001	SD125R
	BO12	5616	ø 22.0	70.5	ø 26.0	M20X1.0		487.001	P1653D
	NP-17,NP-16,NT-17	5717	ø 23.0	72	ø 28.0	M22X1.0		483.001	TSG20R
	NP-20,BS20,BO18,BS18	5720	ø 30.0	70	ø 36.0	M28X1.0		486.001	NN20KD
	BO20-CV	5721	ø 26.0	77	ø 29.0	M25X1.0			TD26
	BA-26	5726	ø 33.0	70	ø 38.0	M30X1.0			
	BA-26L	5724	ø 32.0	70	ø 38.0	M30X1.0			
	S-25,BS-26	5725	ø 34.0	87.5	ø 41.0	M34X1.0	3733E	451.001	CD25
	NP-32	5532	ø 42.0	82	ø 49.0	M40X1.0	3827E	28.001	TD32S
	BH38	5738	ø 48.0	81	ø 54.0	M46X1.0			

	Type								
NOMURA	NS-P8410,NS-P8420	5608	ø 14.0	60.5	ø 20.0	M14X1.0		480.001	P853D
	NS-P1053,NN-10K,	5610	ø 16.0	63	ø 20.0	M14X1.0		481.001	P1053D
	NS-P1653,NS-P1253	5616	ø 22.0	70.5	ø 26.0	M20X1.0		487.001	P1653D
	NN-P20,NN-20KF	5620	ø 30.0	67.5	ø 35.0	M30X1.0			
	NNC-P2553,NN-25K	5625	ø 36.0	89	ø 44.0	M36X1.0			
	P-32	5632	ø 44.0	90	ø 50.0	M40X1.0			
TORNOS	M4,T4,TV	5904	ø 9.0	44	ø 12.0	M8X0.75	3077E	1.001	PD-4
	M7	5907	ø 11.0	52	ø 14.5	M10X0.75	3134E	3.001	TD-7
	M7,MS7	5908	ø 13.0	68	ø 17.0	M13X1.0		45.001	
	R10,M10,R125,MS7	5910	ø 16.0	59	ø 20.5	M14X1.0	3260E	8.001	TD10
	R10,M10,R125	5212	ø 18.0	60	ø 22.0	M18X1.0	3319E	174.001	SD125R
	M15,R16,RR20	5915	ø 22.0	68	ø 29.0	M19X1.0	3454E	13.001	TD20
	M15,R16,RR20	5916	ø 22.0	68	ø 29.0	M22X1.0	3455E	39.001	TD20R
	RR20,	5920	ø 28.0	82	ø 34.0	M25X1.0	3602E	22.001	TD25S
	M20,M25	5925	ø 32.0	70.5	ø 40.0	M32X1.0	3708E	282.001	TSD20
	MR32	5932	ø 44.0	87.5	ø 53.0	M40X1.0	3835E	27.001	
-DECO TORNOS -DECO	DECO 2000-7	5907	ø 11.0	52	ø 14.5	M10X0.75	3134E	3.001	TD-7
	DECO 2000-10	5910	ø 16.0	59	ø 20.5	M14X1.0	3260E	8.001	TD10
	DECO 2000-13/16	5816	ø 24.0	61	ø 29.5	M24X1.0	3507E	61.002	O201
	DECO 2000-20	5820	ø 28.0	82	ø 38.0	M25X1.0	3610E	18.001	TD25/167
	DECO 2000-26	5725	ø 34.0	87.5	ø 41.0	M34X1.0	3733E	451.001	CD25
	DECO 2000-32	5532	ø 42.0	82	ø 49.0	M40X1.0	3827E	28.001	TD32S
HANWHA	HANEX11,SL12	5212	ø 18.0	60	ø 22.0	M18X1.0	3319E	174.001	SD125R
	HANEX17,ML18-G	5916	ø 22.0	68	ø 29.0	M22X1.0	3455E	39.001	TD20R
	HANEX20	5920	ø 28.0	82	ø 34.0	M25X1.0	3602E	22.001	TD25S
	HANEX25	5725	ø 34.0	87.5	ø 41.0	M34X1.0	3733E	451.001	CD25
	SL-32	5532	ø 42.0	82	ø 49.0	M40X1.0	3827E	28.001	TD32S
	SL-35,SL-38	5435	ø 45.0	82	ø 52.0	M42X1.0			
	SL-38HP-II	5438	ø 46.0	82	ø 53.0	M45X1.0			
HARDINGE	SL,ST220	5720	ø 30.0	70	ø 36.0	M28X1.0		486.001	NN20KD
	ST220	5920	ø 28.0	82	ø 34.0	M25X1.0	3602E	22.001	TD25S
	ST225	5725	ø 34.0	87.5	ø 41.0	M34X1.0	3733E	451.001	CD25
DMG	GMC20	5820	ø 28.0	82	ø 38.0	M25X1.0	3610E	18.001	TD25/167
POLYGYM	DIAMOND 12,12CS	5212	ø18.0	60	ø 22.0	M18X1.0	3319E	174.001	SD125R
	DIAMOND 16,16CS	5616	ø 22.0	70.5	ø 26.0	M20X1.0		487.001	P1653D
	DIAMOND 20,20B,20CS,20CSB	5216	ø 30.0	59	ø 35.0	M30X1.0		510.001	
	DIAMOND 25,25B,25CS,25CSB	5725	ø 34.0	87.5	ø 41.0	M34X1.0	3373E	451.001	CD25
	DIAMOND 32,32B,32CS,32CSB	5232	ø 42.0	82	ø 48.0	M40X1.0		28.01	TD32
JINN FA	JSL-20	5720	ø30.0	70	ø 36.0	M28X1.0		486.001	NN20KD
	JSL-26	5725	ø 34.0	87.5	ø 41.0	M34X1.0	3733E	451.001	CD25
	JSL-32	5532	ø 42.0	82	ø 49.0	M40X1.0	3827E	28.001	TD32S
WANG TZYY	SL-1693	5616	ø 22.0	70.5	ø 26.0	M20X1.0		487.001	P1653D
	SL-2596	5725	ø 34.0	87.5	ø 41.0	M34X1.0	3733E	451.001	CD25
	SL-3295	5232	ø 42.0	82	ø 48.0	M40X1.0		28.01	TD32

Guide bush hole options

GB01

Ceramics

GB02

S-shaped groove

GB03

V groove

GB04

Hexagon

GB05

Square

GB06

Special-shaped material

GB07

Carbide lengthening

GB08

Copper bushing with inner hole at tail end

GB09

Rectangle

Toggle

Automatic lathe toggle	Automatic lathe toggle	Automatic lathe toggle	Bench lathe toggle
Fuji 0825	Shimamoto 4#	GF 15#	SR 15#
Fuji lengthen	Shimamoto 7#	GF 20#	SR 20#
Fuji 0835	Shimamoto 10L	WE 15#	SY 15#
Fuji 16#	Shimamoto 12#	TP 16#	SY 20#
Fuji 25#	Nomura 8#	CC 15#	SD 15#
Daiwa 8#	Nomura 10#	CC 20#	SD 25#
Daiwa 102	Nomura 10T	CC 32#	SD 32#
Daiwa 801	Nomura 10S	Traub 16#	SD 32#
Daiwa 15#	Nomura 12#	Traub 25#	SD 32#
Daiwa 10P	Nomura 16#	Traub 30#	YB 15#
STAR 4#	Nomura NN16	Traub 42#	TB 25#
STAR 8#	Nomura 16D	SU15#	YB 25N
STAR 10J	Nomura NN20	SU25#	YB 30#
STAR 13#	Nomura NN20J	MY 15#	YB 42#
STAR RNC16(New)	Nomura 25#	MY 20#	CC 15#
STAR RNC16	Citizen 12#	Tornos 7#	CC 25#
STAR RNC16 (B)	Citizen 12(B)	Tornos 10#	CC 32#
STAR SB16	Citizen 12BL	Tornos CT20#	
STAR SR20R	Citizen 12#(New)	SHYE TOWEN 15#	
STAR SR20R (B)	Citizen 16#	SHYE TOWEN 20#	
STAR 32#	Citizen 16(B)	SHYE TOWEN 32#	
Tsugami 4#	Citizen 20#	Strohm 13#	
Tsugami 7#	Citizen 20(B)	JF 20#	
Tsugami NP11	Citizen 20/25BL	JF 20#	
Tsugami NP17	WZ 15#	JF 20#(B)	
Tsugami NP17(B)	WZ 20#	JF 32AS180B	
Tsugami NP20	WZ 25#	JF JSL42AB	
Tsugami BO203	WZ 32#	JF25#	
Tsugami BO205	WZ 1693	JF32#	
Tsugami BO206	WZ 1693(B)	LZ 25#	
Tsugami BO12	GOODWAY SW20	Polygim 20#	
Tsugami S25	GOODWAY SW20(B)	RUEY LONG 15#	
Tsugami BA26	GOODWAY SK38#	RUEY LONG 25#	
Tsugami BO385	Lisheng 32#	TOYO 15#	
Miyano 25#	SH15#	LB 32#	
Miyano 42#	SH20#		

CNC Toggle

STAR

Number	(Model)	(L)	(H)	(T)	(Ø)
1	8#	53	17.1	6	4
2	10J	40	18	6	6
3	12#	39	25.6	8	6
4	RNC16	67.5	32	10	6
5	RNC16(新)(RNC16 New)	68	32	10	6
6	RNC16副軸(RNC16 B)	39	22	8	6
7	SB16#	68	31.5	10	6
8	20#	68	31	10	8
9	20#	50	25.6	12	8
10	SR20R	78	35.6	12	8
11	SR20	57	27	12	8
12	32#	67.3	29.9	12	8

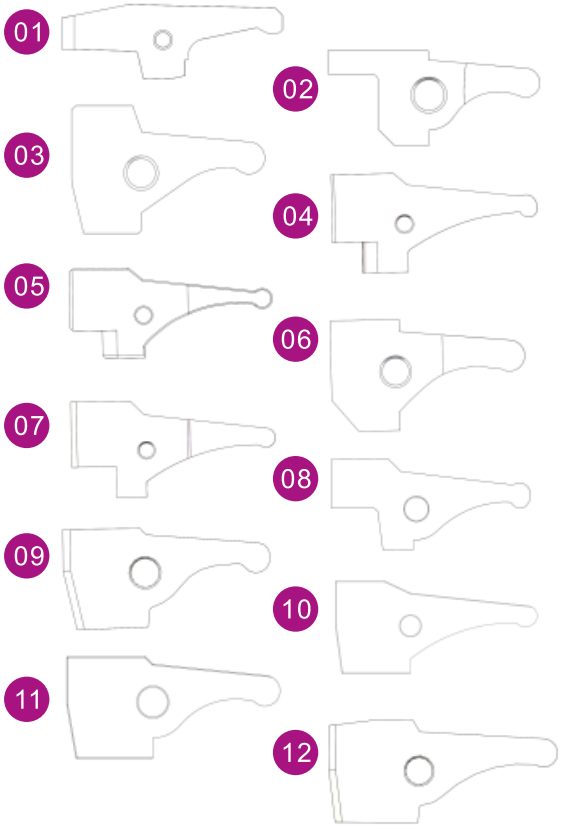

TSUGAMI

Number	(Model)	(L)	(H)	(T)	(Ø)
1	T7	59	18	7	5
2	BO12	57	17	8	
3	NP17	57	17	12	
4	BO18	57	17	12	
5	BO20	57	17	12	
6	BO205	57	19	12	
7	BO206	57	20	12	
8	S20	57	14	8	
9	BO25	86	22	12	
10	BA26	86	22	12	
11	BO385	86	22	12	

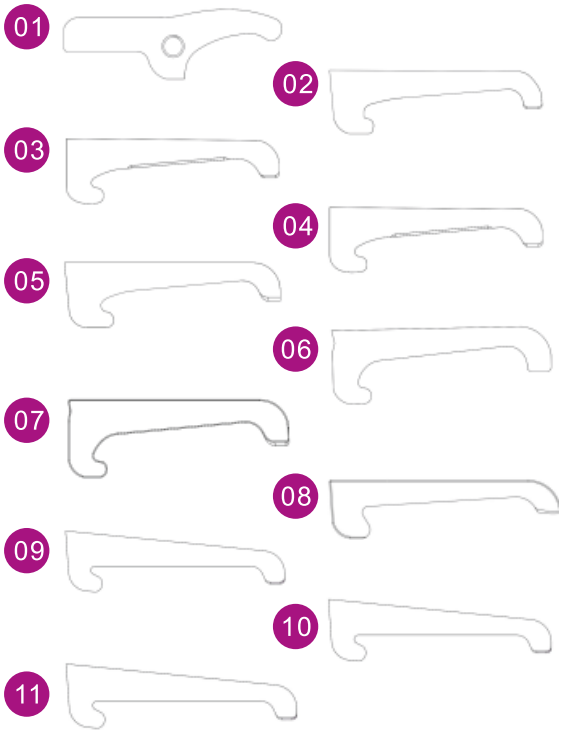

CNC Toggle

CITIZEN

Number	機型(Model)	長度(L)	高度(H)	厚度(T)	孔徑(Ø)
1	B12	54	17.2	6	4
2	B12#副軸(舊)(B12# B)	36.3	12.8	4	4
3	B12#副軸(新)(B12# B)	45	17	6	4
4	BL12	41	23	8	6
5	16#	55	21	8	6
6	16#副軸(16# B)	54	18	6	4
7	20#	73	24.4	10	8
8	BL20	51	20	8	6
9	BL20副軸(BL20 B)	25.5	21.4	8	6

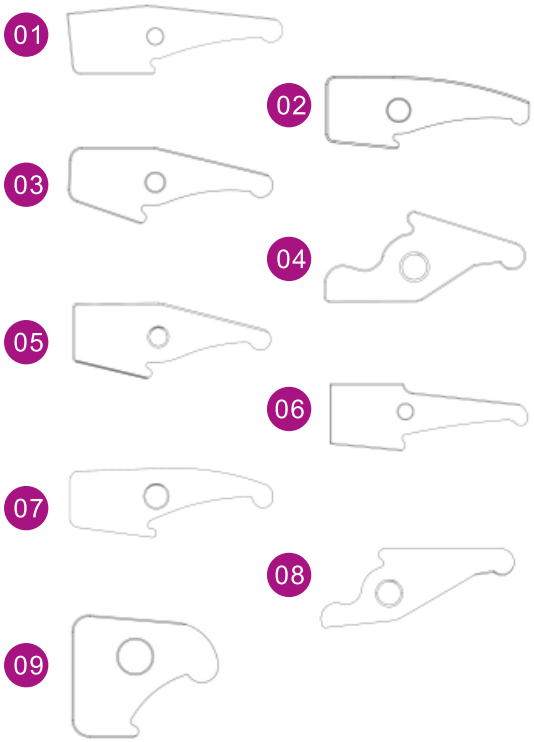

NOMURA

Number	機型(Model)	長度(L)	高度(H)	厚度(T)	孔徑(Ø)
1	8#	50.5	16	6	4
2	10#	50.3	17.4	7	4.5
3	10T	50.3	17.4	7	4.5
4	10S	53	17	7	4.5
5	P16	64.6	20.3	8	6
6	NN16	58.6	21.3	7	4.5
7	NN20	69.5	24	8	6
8	NN20J	70	25	8	6
9	25#	96	28.7	14	10

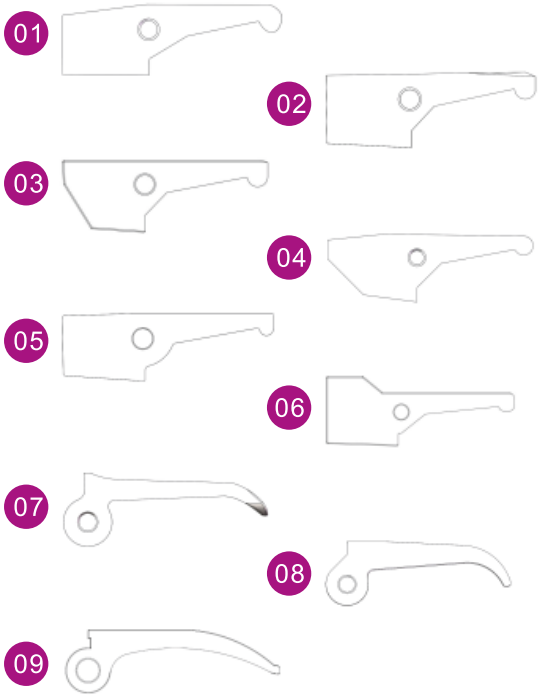

LNS Finger chuck

01

02

03

04

05

06

07

08

09

10

11

12

13

14

15

16

17

18

Product code	Model	ID	OD	L	Tooth gaugeL	Numberingr
FL01	4#	0.8~4.0mm	5mm	98mm	M4P0.7	1
FL02	4-7#	0.8~4.0mm	7mm	98mm	M4P0.7	2
FL02	4-7#	4.1~6.0mm	7mm	98mm	M4P0.7	2
FL02	4-7#	2.0~5.5mm	7mm	98mm	M4P0.7	2
FL03	4#	0.8~4.0mm	5mm	28mm	M4P0.7	3
FL04	4-7#	1.5~6.0mm	7mm	28mm	M4P0.7	4
FL04	7#	1.3~6.0mm	7mm	50mm	M4P0.7	5
FL05	7#	1.3~6.5mm	8mm	50mm	M4P0.7	5
FL05	7#	6.6~7.0mm	9mm	50mm	M4P0.7	5
FL06	8.5#	1.5~7.8mm	9.5mm	45mm	M5P0.8	6
FL07	8.5#	7.9~8.5mm	10mm	45mm	M5P0.8	6
FL07	8.5#	3.0~10.5mm	12mm	45mm	M5P0.8	7
FL07	8.5#	10.8~11.0mm	13mm	45mm	M5P0.8	8
FL07	8.5#	11.5~12.0mm	14mm	45mm	M5P0.8	8
FL08	8.5#	12.5~13.0mm	15mm	45mm	M5P0.8	8
FL09	8.5#	13.5mm	15.5mm	45mm	M5P0.8	8
FL10	20#	2.5~13.0mm	15mm	60mm	M9P1.0	9
FL10	20#	11.5~15.1mm	18mm	60mm	M9P1.0	10
FL10	20#	15.2~16.0mm	19mm	60mm	M9P1.0	10
FL10	20#	16.5~18.0mm	20mm	60mm	M9P1.0	10
FL10	20#	18.5~19.0mm	22mm	60mm	M9P1.0	11
FL11	20#	19.5~21.0mm	24mm	60mm	M9P1.0	11
FL11	20#	21.5~22.0mm	25mm	60mm	M9P1.0	11
FL11	XT326	18.0~19.5mm	22mm	60mm	M9P1.0	12
FL11	XT326	20.0~21.0mm	23mm	60mm	M9P1.0	12
FL12	XT326	21.5~23.0mm	26mm	60mm	M9P1.0	12
FL13	XT326	24.0~26.0mm	28mm	60mm	M9P1.0	12
FL14	SN20#	3.0~18.0mm	20mm	60mm	M10P1.0	13
FL15	SN25#	16.5~23.0mm	25mm	60mm	M10P1.0	14
FL16	SN27#	16.5~25.0mm	27mm	60mm	M10P1.0	14
FL17	SN32#	23.5~28.0mm	32mm	70mm	M17P1.0	15
FL18	SN35#	28.5~33.0mm	35mm	80mm	M25P1.5	16
FL19	SN37#	31.0~34.0mm	37mm	80mm	M25P1.5	17
FL20	SN38#	31.0~35.0mm	38mm	80mm	M25P1.5	17
FL21	SN42#	31.5~40.0mm	42mm	80mm	M25P1.5	17
FL22	SN45#	38.5~42.2mm	45mm	80mm	M25P1.5	17
FL23	SN51#	42.5~48.0mm	51mm	80mm	M25P1.5	18
FL22	32#	4.0~30.0mm	32mm	80mm	M25P1.5	15
FL23	40#	21.0~36.5mm	40mm	80mm	M25P1.5	17

LNS Revolving tip

01


02


03


04


05


06


07


08


09


10


11


12


13


14


15


16


17


18


19


20


21


22


Product code	Model	OD	L	Tooth gaugeL	Push rod tooth gauge	Numberingr
RL01	4#	5mm	77.1mm	M4P0.7	M4P0.7	1
RL02	4-7#	7mm	77.2mm	M4P0.7	M4P0.7	2
RL03	7#	7mm	65.3mm	M4P0.7	M6P0.75	3
RL04	7#	7mm	65.3mm	M4P0.7	M6*1.0	3
RL05	7#	8mm	65.3mm	M4P0.7	M6P0.75	3
RL06	7#	8mm	65.3mm	M4P0.7	M6*1.0	3
RL07	7#	8mm	61.5mm	M4P0.7	M6P0.75	4
RL08	7#	7mm	57.5mm	M4P0.7	M6P0.75	5
RL09	7.5#	7.5mm	57.5mm	M4P0.7	M6*1.0	5
RL10	7#	8mm	57.5mm	M4P0.7	M6P0.75	5
RL11	8.5#	9.5mm	63.5mm	M5P0.8	M7P0.75	6
RL12	8.5#	9.5mm	66.3mm	M5P0.8	M7P0.75	6
RL13	8.5#	10mm	59.5mm	M5P0.8	M7P0.75	7
RL14	8.5#	10mm	61.1mm	M5P0.8	M7P0.75	7
RL15	8.5#	9mm	64.5mm	M5P0.8	M7P0.75	8
RL16	8.5#	10mm	64.5mm	M5P0.8	M7P0.75	8
RL17	12#	12mm	64.5mm	M5P0.8	M7P0.75	9
RL18	12#	12mm	64.5mm	M5P0.8	M8P1.0	9
RL19	20#	15mm	92.2mm	M9P1.0	M12P1.0	10
RL20	20#	15mm	92.2mm	M9P1.0	M12P1.0	11
RL21	20#	15mm	92.2mm	M9P1.0	M12P1.25	12
RL22	20#	20mm	92.2mm	M9P1.0	M12P1.25	13
RL23	25#	25mm	92.2mm	M9P1.0	M12P1.25	14
RL24	20#	20.5mm	207.5mm	M10P1.0	PIN=4.0mm	15
RL25	20#	20.5mm	193.5mm	M10P1.0	M12P1.25	
RL26	22#	22.5mm	207.5mm	M10P1.0	PIN=4.0mm	15
RL27	23#	22.5mm	207.5mm	M10P1.0	PIN=4.0mm	15
RL28	23#	22.5mm	193.5mm	M10P1.0	M12P1.25	
RL29	25#	25.5mm	207.5mm	M10P1.0	PIN=5.0mm	16
RL30	25#	25.5mm	193.5mm	M10P1.0	M16P1.5	
RL31	27#	27.5mm	207.5mm	M10P1.0	PIN=5.0mm	16
RL32	27#	27.5mm	193.5mm	M10P1.0	M16P1.5	
RL33	32#	32.5mm	165.0mm	M25P1.5	PIN=5.0mm	17
RL34	32#	32.5mm	165.0mm	M25P1.5	M27	18
RL35	35#	35.5mm	165.0mm	M25P1.5	PIN=6.0mm	17
RL36	35#	35.5mm	165.0mm	M25P1.5	M29	18
RL37	37#	37.5mm	165.0mm	M25P1.5	PIN=6.0mm	17
RL38	37#	37.5mm	165.0mm	M25P1.5	M29	18
RL39	38#	38.5mm	165.0mm	M25P1.5	PIN=6.0mm	17
RL40	38#	38.5mm	165.0mm	M25P1.5	M29	18
RL41	42#	41.5mm	165.0mm	M25P1.5	PIN=6.0mm	19
RL42	42#	41.5mm	165.0mm	M25P1.5	M34	20
RL43	45#	45.5mm	165.0mm	M25P1.5	PIN=6.0mm	19
RL44	45#	45.5mm	165.0mm	M25P1.5	M38	20
RL45	51#	51.5mm	165.0mm	M25P1.5	PIN=6.0mm	21
RL46	51#	51.5mm	165.0mm	M25P1.5	M42	22

LNS Parts

42# Aircraft piece

KT Aircraft piece

Aircraft piece

Aircraft piece

Anti-vibration block

Anti-vibration wheel

Anti-vibration wheel axle

Anti-vibration rubber wheel set (mechanical arm)

PE Plastic pipe

Plastic pipe

Screw rod

Manual box

Manual control box line

Adapter shaft

Adapter shaft

Adapter shaft

GIMCO (IEMCA) Finger chuck

Product code	Model	ID	OD	L	Tooth gaugeL	Drawing number
FIG01	4#	0.8~4mm	5mm	98mm	M4P0.7	1
FIG02	5#	2~4mm	5mm	37mm	M4P0.5	2
FIG03	4-7#	0.8~4mm	7mm	98mm	M4P0.7	3
FIG04	4-7#	4.1~6mm	7mm	98mm	M4P0.7	3
FIG05	4-7#	2.~5.5mm	7mm	98mm	M4P0.7	3
FIG06	7.5#	2~6mm	7.5mm	40mm	M5P0.8	4
FIG07	10#	1.5~8.5mm	10mm	42mm	M6P0.75	5
FIG08	12#	1.5~10.5mm	12mm	42mm	M7P0.75	6
FIG09	15#	2~13mm	15mm	42mm	M8P1.0	7
FIG10	16#	12~14mm	16mm	42mm	M8P1.0	7
FIG11	20#	3~18.5mm	20mm	60mm	M10P1.0	8
FIG12	23#	16~21mm	23mm	60mm	M10P1.0	9
FIG13	25#	16.5~23mm	25mm	60mm	M10P1.0	10
FIG14	27#	16.5~25.5mm	27mm	60mm	M10P1.0	9
FIG15	32#	4~30mm	32mm	80mm	M25P1.5	11
FIG16	35#	28.5~32mm	35mm	80mm	M25P1.5	12
FIG17	37#	31~34mm	37mm	80mm	M25P1.5	13
FIG18	38#	31~35mm	38mm	80mm	M25P1.5	13
FIG19	40#	21~36.5mm	40mm	80mm	M25P1.5	13
FIG20	42#	31.5~40mm	42mm	80mm	M25P1.5	13
FIG21	45#	38.5~42.2mm	45mm	80mm	M25P1.5	13
FIG22	51#	42.5~48mm	51mm	80mm	M25P1.5	14

GIMCO(IEMCA) Revolving tip

01

02

03

04

05

06

07

08

09

10

11

12

Product code	Model	OD	L	Tooth gauge	Push rod tooth gauge	Drawing number
RG01	7.5#	7.5mm	151mm	M5P0.5	M6P0.75	1
RG02	10#	10.5mm	137.5mm	M6P0.75	M8P1.0	2
RG03	10#	10.5mm	167mm	M6P0.75	PIN=3.0	3
RG04	12#	12.5mm	173mm	M7P0.75	PIN=3.0	4
RG05	15#	15.5mm	195mm	M8P1.0	PIN=4.0	5
RG06	16#	16.5mm	195mm	M8P1.0	PIN=4.0	5
RG07	18#	18.5mm	195mm	M8P1.0	PIN=4.0	5
RG08	19#	19.5mm	195mm	M8P1.0	PIN=4.0	5
RG09	20#	20.5mm	207.5mm	M10P1.0	PIN=4.0	6
RG10	22#	22.5mm	207.5mm	M10P1.0	PIN=4.0	6
RG11	23#	23.5mm	207.5mm	M10P1.0	PIN=4.0	6
RG12	25#	25.5mm	207.5mm	M10P1.0	PIN=5.0	7
RG13	27#	27.5mm	207.5mm	M10P1.0	PIN=5.0	7
RG14	30#	30.5mm	165mm	M25P1.5	PIN=5.0	8
RG15	32#	32.5mm	165mm	M25P1.5	PIN=5.0	8
RG16	35#	35.5mm	165mm	M25P1.5	PIN=5.0	9
RG17	37#	37.5mm	165mm	M25P1.5	PIN=5.0	9
RG18	38#	38.5mm	165mm	M25P1.5	PIN=5.0	9
RG19	40#	40.5mm	165mm	M25P1.5	PIN=6.0	10
RG20	42#	42.5mm	165mm	M25P1.5	PIN=6.0	10
RG21	45#	45.5mm	165mm	M25P1.5	PIN=6.0	10
RG22	51#	51.5mm	165mm	M25P1.5	PIN=6.0	11
RG23	51#	51.5mm	221mm	M25P1.5	PIN=6.0	12

GIMCO (IEMCA) Parts

Anti-vibration block

Anti-vibration wheel

Plastic pipe

Manual box

Manual control box line

Adapter shaft

Adapter shaft

Adapter shaft

IKURA Finger chuck

Product code	Model	ID	OD	L	Tooth gaugeL	Numberingr
FI01	4#	0.8~4.0mm	5mm	98mm	M4P0.7	1
FI02	4#	0.8~4.0mm	5mm	28mm	M4P0.7	2
FI03	7#	1.5~6.0mm	7mm	40mm	M6P1.0	3
FI04	8#	1.5~6.5mm	8mm	40mm	M6P1.0	3
FI05	10#	1.5~8.5mm	10mm	40mm	M6P1.0	4
FI06	12#	3~10.5mm	12mm	40mm	M6P1.0	5
FI07	15#	3~13.0mm	15mm	55mm	M4P0.7	6
FI08	20#	3~18.0mm	20mm	55mm	M4P0.7	7
FI09	25#	5~23.0mm	25mm	76mm	M4P0.7	8
FI10	32#	5~28.0mm	32mm	76mm	M5P0.8	9

IKURA Revolving tip

01

02

03

04

05

06

07

08

Product code	Model	OD	L	Tooth gaugeL	Push rod tooth gauge	Numberingr
RI01	4#	5mm	77.1mm	M4P0.7	M4P0.7	1
RI02	7#	7mm	67.5mm	M6P1.0	M6P1.0	2
RI03	8#	8mm	67.5mm	M6P1.0	M6P1.0	2
RI04	10#	10mm	67.5mm	M6P1.0	M6P1.0	3
RI05	12#	12mm	67.5mm	M6P1.0	M6P1.0	4
RI06	15#	15mm	119.5mm	PIN=6.0	M12P1.25	5
RI07	16#	16.3mm	119.5mm	PIN=6.0	M12P1.25	6
RI08	17#	17mm	119.5mm	PIN=6.0	M12P1.25	6
RI09	19#	19mm	119.5mm	PIN=6.0	M12P1.25	6
RI10	20#	20mm	119.5mm	PIN=6.0	M12P1.25	6
RI11	21#	20.5mm	119.5mm	PIN=6.0	M12P1.25	6
RI12	22#	21mm	119.5mm	PIN=6.0	M12P1.25	6
RI13	25#	25mm	160.3mm	PIN=8.0	M20P1.5	7
RI14	32#	32mm	160.3mm	PIN=8.0	M20P1.5	8

PRO Finger chuck

Product code	Model	ID	OD	L	Tooth gaugeL	Drawing number
FP01	4#	0.8~4mm	5mm	98mm	M4P0.7	1
FP02	4-7#	0.8~4mm	7mm	98mm	M4P0.7	2
FP03	4-7#	4.1~6mm	7mm	98mm	M4P0.7	2
FP04	4-7#	2.~5.5mm	7mm	98mm	M4P0.7	2
FP05	10#	1.5~8.5mm	10mm	42mm	M6P0.75	3
FP06	12#	1.5~10.5mm	12mm	42mm	M7P0.75	4
FP07	15#	2~13mm	15mm	42mm	M8P1.0	5
FP08	16#	12~14mm	16mm	42mm	M8P1.0	5
FP09	16#	3~13mm	15mm	60mm	M12P1.0	6
FP10	16#	12~14mm	16mm	60mm	M12P1.0	6
FP11	20#	3~18.5mm	20mm	60mm	M10P1.0	7
FP12	20#	3~18mm	20mm	60mm	M12P1.0	7
FP13	23#	16~21mm	23mm	60mm	M10P1.0	8
FP14	25#	16.5~23mm	25mm	60mm	M10P1.0	9
FP15	25#	5~19.5mm	23mm	80mm	M18P1.0	9
FP16	25#	20~23mm	25mm	80mm	M18P1.0	10
FP17	27#	16.5~25.5mm	27mm	60mm	M10P1.0	9
FP18	32#	4~30mm	32mm	80mm	M25P1.5	11
FP19	35#	28.5~32mm	35mm	80mm	M25P1.5	12
FP20	37#	31~34mm	37mm	80mm	M25P1.5	13
FP21	38#	31~35mm	38mm	80mm	M25P1.5	13
FP22	40#	21~36.5mm	40mm	80mm	M25P1.5	13
FP23	42#	31.5~40mm	42mm	80mm	M25P1.5	13
FP24	45#	38.5~42.2mm	45mm	80mm	M25P1.5	13
FP25	51#	42.5~48mm	51mm	80mm	M25P1.5	14

PRO Revolving tip

01

02

03

04

05

06

07

08

09

10

11

12

13

Product code	Model	OD	L	Tooth gaugeL	Push rod tooth gauge	Numberingr
RP01	10#	10.5mm	167mm	M6P0.75	PIN=3.0	1
RP02	12#	12.5mm	173mm	M7P0.75	PIN=3.0	2
RP03	12#	12mm	113.5mm	M7P0.75	M7P0.75	3
RP04	15#	15.5mm	195mm	M8P1.0	PIN=4.0	4
RP05	16#	16.5mm	195mm	M8P1.0	PIN=4.0	4
RP06	16#	16mm	147mm	M12P1.0	M10P1.0	5
RP07	18#	18.5mm	195mm	M8P1.0	PIN=4.0	4
RP08	19#	19.5mm	195mm	M8P1.0	PIN=4.0	4
RP09	20#	20.5mm	207.5mm	M10P1.0	PIN=4.0	6
RP10	22#	22.5mm	207.5mm	M10P1.0	PIN=4.0	6
RP11	23#	23.5mm	207.5mm	M10P1.0	PIN=4.0	6
RP12	20#	20mm	145mm	M12P1.0	M10P1.0	7
RP13	25#	25.5mm	207.5mm	M10P1.0	PIN=5.0	8
RP14	27#	27.5mm	207.5mm	M10P1.0	PIN=5.0	8
RP15	25#	26mm	145mm	M18P1.0	M14P1.0	9
RP16	30#	30.5mm	165mm	M25P1.5	PIN=5.0	10
RP17	32#	32.5mm	165mm	M25P1.5	PIN=5.0	10
RP18	35#	35.5mm	165mm	M25P1.5	PIN=5.0	11
RP19	37#	37.5mm	165mm	M25P1.5	PIN=5.0	11
RP20	38#	38.5mm	165mm	M25P1.5	PIN=5.0	11
RP21	40#	40.5mm	165mm	M25P1.5	PIN=6.0	12
RP22	42#	42.5mm	165mm	M25P1.5	PIN=6.0	12
RP23	45#	45.5mm	165mm	M25P1.5	PIN=6.0	12
RP24	51#	51.5mm	165mm	M25P1.5	PIN=6.0	13

PRO Parts

Manual box

Adapter shaft

Adapter shaft
(quick release type)

Adapter shaft

Adapter shaft

Anti-vibration block

BARLOAD Parts

Adapter shaft

Adapter shaft

Adapter shaft

ALPS Finger chuck

01

02

03

04

Product code	Model	ID	OD	L	Tooth gaugeL	Numberingr
FA01	20#	3~12.7mm	15mm	75mm	M10P1.0	1
FA02	20#	13~15mm	18mm	75mm	M10P1.0	2
FA02	20#	15.5~16mm	19mm	75mm	M10P1.0	2
FA02	20#	16.5~18mm	20mm	75mm	M10P1.0	2
FA03	32#(P)	8~18mm	24mm	110mm		3
FA03	32#(P)	18.5~19mm	26mm	110mm		3
FA04	32#(P)	19.5~26.5mm	32mm	110mm		4
FA04	32#(P)	27~29.5mm	35mm	110mm		4
FA04	32#(P)	30~33mm	38mm	110mm		4
FA04	32#(P)	33.5~36mm	42mm	110mm		4

ALPS Revolving tip

01

02

03

Product code	Model	OD	L	Tooth gaugeL	Push rod tooth gauge	Numberingr
RA01	12#	12mm	82.2mm	M6P1.0	M8	1
RA02	16#	16mm	70.1mm	M10P1.0	M14P1.0	2
RA03	20#	20mm	72.2mm	M10P1.0	M16P1.0	3

BARLOAD Finger chuck

01

02

03

04

05

06

07

08

09

10

11

12

13

14

15

16

17

18

Product code	Model	ID	OD	L	Tooth gaugeL	Numberingr
FB01	4#	0.8~4.0	5	98mm	M4P0.7	1
FB02	4-7#	0.8~4.0		98mm	M4P0.7	2
FB02	4-7#	4.1~6.0	7	98mm	M4P0.7	2
FB03	4#	0.8~4.0	5	28mm	M4P0.7	3
FB04	4-7#	1.5~6.0	7	28mm	M4P0.7	4
FB05	7#	1.3~6.0	7	50mm	M4P0.7	5
FB05	7#	1.3~6.5	8	50mm	M4P0.7	5
FB05	7#	6.6~7.0	9	50mm	M4P0.7	5
FB06	8.5#	1.5~7.8	9.5	45mm	M5P0.8	6
FB06	8.5#	7.9~8.5	10	45mm	M5P0.8	6
FB07	8.5#	3.0~10.5	12	45mm	M5P0.8	7
FB08	8.5#	10.8~11.0	13	45mm	M5P0.8	8
FB08	8.5#	11.5~12.0	14	45mm	M5P0.8	8
FB08	8.5#	12.5~13.0	15	45mm	M5P0.8	8
FB08	8.5#	13.5	15.5	45mm	M5P0.8	8
FB09	20#	2.5~13.0	15	60mm	M9P1.0	9
FB10	20#	11.5~15.1	18	60mm	M9P1.0	10
FB10	20#	15.2~16.0	19	60mm	M9P1.0	10
FB10	20#	16.5~18.0	20	60mm	M9P1.0	10
FB11	20#	18.5~19.0	22	60mm	M9P1.0	11
FB11	20#	19.5~21.0	24	60mm	M9P1.0	11
FB11	20#	21.5~22.0	25	60mm	M9P1.0	11
FB12	XT326	18.0~19.5	22	60mm	M9P1.0	12
FB12	XT326	20.0~21.0	23	60mm	M9P1.0	12
FB12	XT326	21.5~23.0	26	60mm	M9P1.0	12
FB12	XT326	24.0~26.0	28	60mm	M9P1.0	12
FB13	SN20#	3.0~18.0	20	60mm	M10P1.0	13
FB14	SN25#	16.5~23.0	25	60mm	M10P1.0	14
FB15	SN27#	16.5~25.0	27	60mm	M10P1.0	14
FB16	SN32#	23.5~28.0	32	70mm	M17P1.0	15
FB17	SN35#	28.5~33.0	35	80mm	M25P1.5	16
FB18	SN37#	31.0~34.0	37	80mm	M25P1.5	17
FB19	SN38#	31.0~35.0	38	80mm	M25P1.5	17
FB20	SN42#	31.5~40.0	42	80mm	M25P1.5	17
FB21	SN45#	38.5~42.2	45	80mm	M25P1.5	17
FB22	SN51#	42.5~48.0	51	80mm	M25P1.5	18
FB23	32#	4.0~30.0	32	80mm	M25P1.5	15
FB24	40#	21.0~36.5	40	80mm	M25P1.5	17

BARLOAD Revolving tip

01

02

03

04

05

06

07

08

09

10

11

12

13

Product code	Model	OD	L	Tooth gaugeL	Push rod tooth gauge	Numberingr
RB01	4#	5mm	77.1mm	M4P0.7	M4P0.7	1
RB02	4-7#	7mm	77.2mm	M4P0.7	M4P0.7	2
RB03	7#	7mm	65.3mm	M4P0.7	M6P0.75	3
RB04	7#	7mm	65.3mm	M4P0.7	M6*1.0	3
RB05	7#	8mm	65.3mm	M4P0.7	M6P0.75	3
RB06	7#	8mm	65.3mm	M4P0.7	M6*1.0	3
RB07	7#	8mm	61.5mm	M4P0.7	M6P0.75	4
RB08	7#	7mm	57.5mm	M4P0.7	M6P0.75	5
RB09	7.5#	7.5mm	57.5mm	M4P0.7	M6*1.0	5
RB10	7#	8mm	57.5mm	M4P0.7	M6P0.75	5
RB11	8.5#	9.5mm	63.5mm	M5P0.8	M7P0.75	6
RB12	8.5#	9.5mm	66.3mm	M5P0.8	M7P0.75	6
RB13	8.5#	10mm	59.5mm	M5P0.8	M7P0.75	7
RB14	8.5#	10mm	61.1mm	M5P0.8	M7P0.75	7
RB15	8.5#	9mm	64.5mm	M5P0.8	M7P0.75	8
RB16	8.5#	10mm	64.5mm	M5P0.8	M7P0.75	8
RB17	12#	12mm	64.5mm	M5P0.8	M7P0.75	9
RB18	12#	12mm	64.5mm	M5P0.8	M8P1.0	9
RB19	15#	15.5mm	182.5mm	M9P1.0	PIN=4.0mm	10
RB20	20#	20.5mm	207.5mm	M10P1.0	PIN=4.0mm	11
RB21	25#	25.5mm	207.5mm	M10P1.0	PIN=5.0mm	12
RB22	32#	32.5mm	165.0mm	M25P1.5	PIN=5.0mm	13

Spring

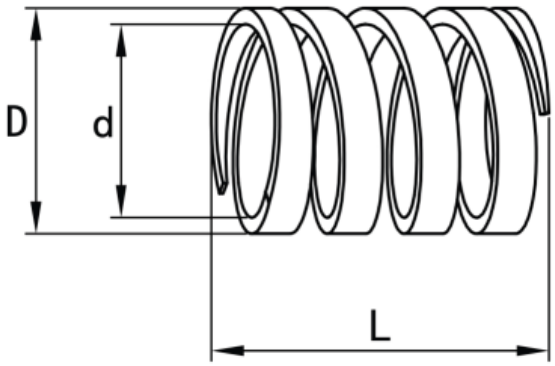

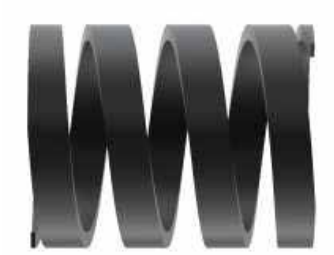

Product code	(D)	(d)	(L)
SP-01	36.8	33	72.5
SP-02	32.6	29	62
SP-03	36.8	33.6	75
SP-04	25.9	21	31
SP-05	29.9	26.2	52
SP-06	25.7	22	46
SP-07	32.5	28.8	32
SP-08	36.6	32.6	58
SP-09	32.8	28.7	32
SP-10	27.9	23.9	35
SP-11	32.5	28.5	35
SP-12	27.5	23.9	35
SP-13	27.9	24	34
SP-14	19.9	16.4	35
SP-15	23.6	19	30
SP-16	36.8	33	45
SP-17	36.8	33.5	70
SP-18	15.9	13.5	32.5
SP-19	15.8	13.5	30.7
SP-20	19.6	17	30
SP-21	19.6	17	26

Cone sleeve

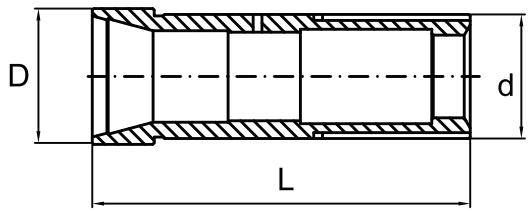

	品名	ØD	L	Ød
星辰錐套	R04主軸錐套	14	66	
	星辰B12主軸錐套	24.2	89	23
	星辰B12背軸錐套	28.3	108.3	28
	星辰A16主軸錐套	33	110	28
	星辰L16主軸錐套	42	104	35
	星辰A20主軸錐套	42	132	42
	星辰A20背軸錐套	44	129	40
	星辰A20錐套(L51620U920B-T)	41	126	35
	星辰A20錐套(L51620U920Z-7K024-M)	41	103	35
	星辰A20錐套(A320NU920Z-7A0012Z)	42	132	42
	星辰A320NU930Z(L25)	46	128	41.8

	品名	ØD	L	Ød
津上錐套	T7主軸錐套	19	77.2	14
	BO125主軸錐套	35	88	31
	BO125副軸錐套	38	96.3	36
	BO20主軸錐套	40	93	36
	BO20主軸錐套	46	103	35
	S20主軸錐套	42	104.4	35
	BO325背軸錐套	47	135	44.8
	BM16背軸錐套	38	106.5	28

	品名	ØD	L	Ød
STAR錐套	RNC16主軸錐套	41.9	87	29
	SR20主軸錐套	43.5	110	35

	品名	ØD	L	Ød
TORNOS錐套	MS-7主軸錐套	23.8	85	18
	D13主軸錐套	30	69	30
	R32主軸錐套	54	122	45

CNC Lathe parts

Change outer diameter sleeves

Lathe spindle

Guide bushing outer bushing

Customized saw blade handle

Power axis

Power axis

Oil proof cover

sliding sleeve

Tsugami water pressure knife block

Saw blade handle

Claw holder

Tie rod

Nut

Nut

Collet adapter

Citizen outlet water pressure knife block

MYLAS Machine automatic lathe parts

Drilling shaft nut

Copper sleeve

Transmission gear

Clutch gear

Transmission gear

Driving gear

Adjusting screw

Top heart

Clutch gear

Clutch fulcrum

Top heart

Type s

Traction block fixing screw

Adjusting rod top shaft

Drive arm shaft screw

Fixing screw

Steel sleeve

Rocker shaft

Nut

Fixing screws

CNC Extension rod

01 Drilling shaft(single)

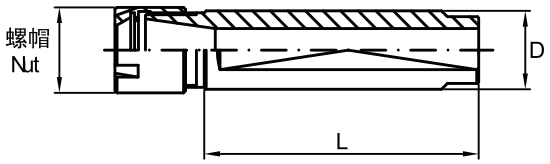

02 Drilling shaft(double)

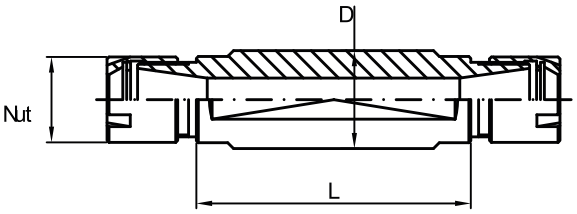

03 Drilling shaft(out of water)

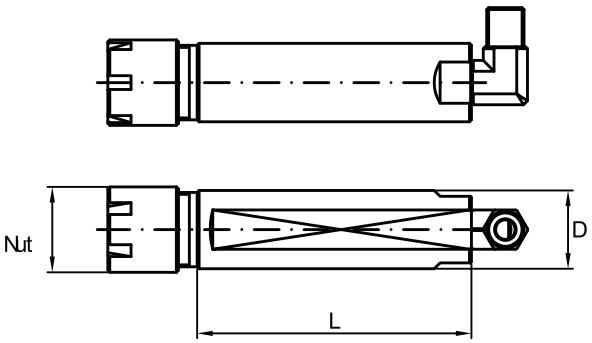

CNC drilling shaft(single)	OD	L	ER	Nut	Numberingr
C16-ER16M-100	16	100	16	M	1
C19.05-ER11A-40	19.05	40	11	A	1
C19.05-ER11A-50	19.05	50	11	A	1
C19.05-ER11A-70	19.05	70	11	A	1
C19.05-ER11M-75	19.05	75	11	M	1
C19.05-ER16M-40	19.05	40	16	M	1
C19.05-ER16M-70	19.05	70	16	M	1
C19.05-ER16M-75	19.05	75	16	M	1
C19.05-ER16M-105	19.05	105	16	M	1
C20-ER11A-50	19.05	50	11	A	1
C20-ER11A-70	19.05	70	11	A	1
C20-ER11A-95	20	95	11	A	1
C20-ER11A-100	20	100	11	A	1
C20-ER16M-40	20	40	16	M	1
C20-ER16M-50	20	50	16	M	1
C20-ER16M-93	20	93	16	M	1
C22-ER16M-60	22	60	16	M	1
C22-ER16M-100	22	100	16	M	1
C25-ER16M-70	25	70	16	M	1
C25.4-ER11M-75	25.4	75	11	M	1
C25.4-ER16M-50	25.4	50	16	M	1
C25.4-ER16M-70	25.4	70	16	M	1
C25.4-ER16M-75	25.4	75	16	M	1
C25.4-ER16M-105	25.4	105	16	M	1
C25.4-ER20M-70	25.4	70	20	M	1
C32-ER20M-95	32	95	20	M	1

CNC drilling shaft(double)	OD	L	ER	Nut	Numberingr
C19.05-ER11A-38	19.05	38	11	A	2
C19.05-ER11A-50	19.05	50	11	A	2
C19.05-ER11M-70	19.05	70	11	M	2
C19.05-ER11M-75	19.05	75	11	M	2
C20-ER11A-38	20	38	11	A	2
C20-ER11A-50	20	50	11	A	2
C20-ER11A-70	20	70	11	A	2
C22-ER16M-60	22	60	16	M	2
C22-ER16M-75	22	75	16	M	2
C22-ER16M-90	22	90	16	M	2
C22-ER16M-95	22	95	16	M	2
C25-ER16M-70	25	70	16	M	2
C25.4-ER16M-50	25.4	50	16	M	2
C25.4-ER16M-70	25.4	70	16	M	2

CNC drilling shaft(out of water)	OD	L	ER	Nut	Numberingr
C25-ER16M-70(單頭)P/T	25	70	16	M	3
C25-ER16M-100(單頭)P/T	25	100	16	M	3
C25-ER20A-55(單頭)P/T	25	55	20	A	3
C25-ER20A-100(單頭)P/T	25	100	20	A	3