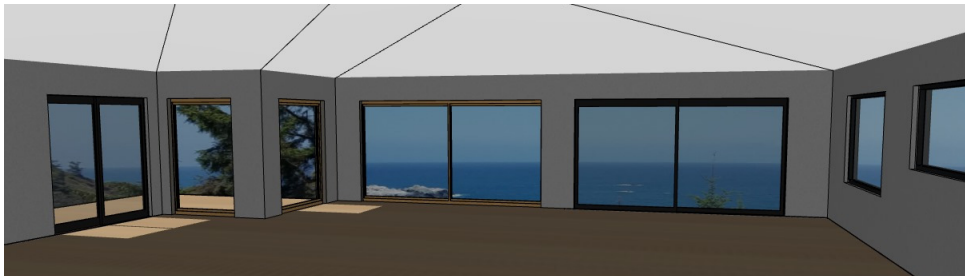

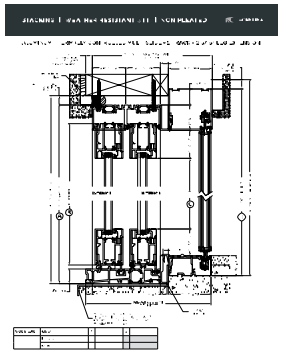

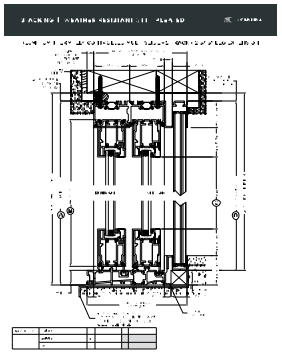

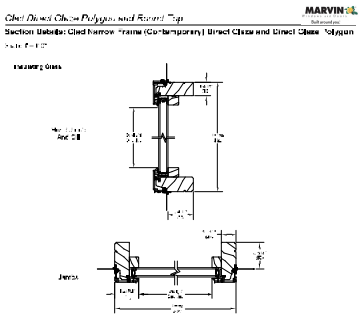

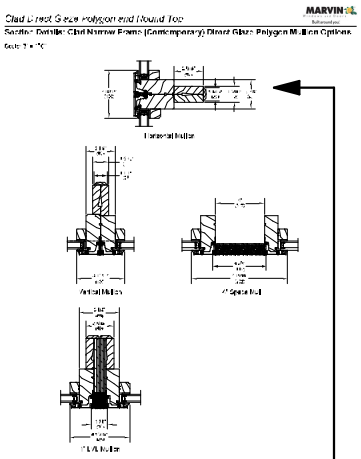

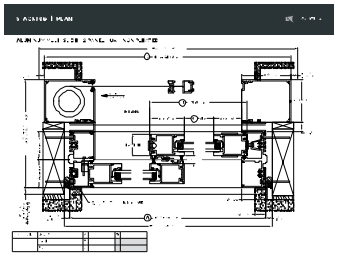

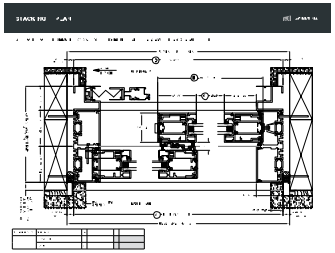

Marvin Mull Detail

La Cantina Screen options w/ Tall Sill

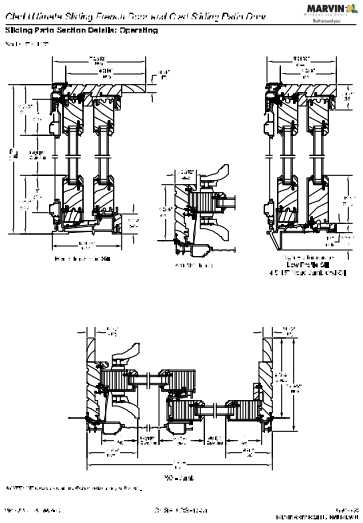

Marvin Low Profile Sill

www.marvin.com

View at the top should be very close to how the sight lines will line up. La Cantina doors are drawn. Sizes will need to be adjusted depending on details chosen.

Please call or e-mail if questions.
Thank you,
Tom Hopkins

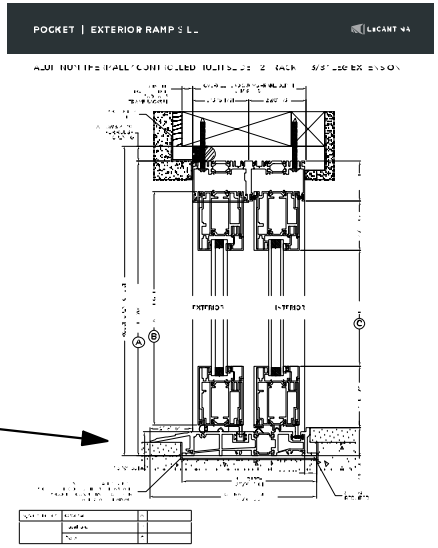

LA Cantina ADA Sill option

http://www.lacantinadoors.com/products/sliding-doors

WEST COAST WINDOW CO.

tomh@westcoastwindow.net

TOM HOPKINS

707-845-5130

ISSUE	ID	CHANGE NAME	BY	DATE

PROJECT NO:
DRAWN BY:
CHECKED BY:
COPYRIGHT:

SHEET TITLE:

COVER SHEET

A1

C:\Users\Tom H\Tom\Documents\Drafting Projects\Underwood\UNDERWOOD.pln Tuesday, July 02, 2019 3:43 PM