GENERAL PLUMBING NOTES

1. ALL PLUMBING FIXTURES, (WATER CLOSETS, SHOWER HEADS, TUB VALVES, URINALS, SINKS, LAVS.) SHALL COMPLY WITH TABLE E101B, APPENDIX E OF THE 2017 FLORIDA PLUMBING CODE, W/ REGARDS TO LOAD VALUES FOR MAXIMUM WATER CONSUMPTION
2. PLUMBING CONTRACTOR, IF DIVIATING FROM THESE PLANS, SHALL SUBMIT A PROPOSED PLAN AND RISER IMMEDIATELY BEFORE WORK IS DONE, FOR ARCHITECT AND CITY INSPECTOR APPROVALS.
3. ALL WORK SHALL BE DONE PER THE PLUMBING SECTION OF THE FLORIDA BUILDING CODE 2017 VERSION 6 FLA. PLUMBING CODE. ALL PVC SHALL BE MIN. SCHED. 40 OR AS ALLOWED BY CODE. ALL FIXTURES, EXCEPT W.C.s, SHALL BE SUPPLIED BY HOT WATER. ALL FIXTURES SHALL HAVE COLD WATER. SEE PLANS FOR HOSE BIBB LOCATIONS.
4. EACH RESIDENCE WILL BE FURNISHED WITH (1) 52 GAL. ELECTR. WATER HEATER INSTALLED WHERE SHOWN ON PLAN. SUPPLIER WILL PROVIDE EXACT CAPACITIES BASED ON F.U. COUNT SHOWN AT LEFT.
5. PROVIDE SHUT-OFF VALVES BEFORE ALL WC's AND LAVATORIES. PROVIDE SHOCK ARRESTORS AT INCOMING HOT WATER LINES ABOVE ALL FIXTURES.
6. ALL SHOWER HEADS SHALL BE PROVIDED WITH MIXING VALVES AT FAUCET CONTROL VALVE.
7. INCOMING SERVICE WATER LINES AND OUTBOUND SEWER LINES SHALL HAVE A 5'-0" MIN. HORIZONTAL SEPARATION; SEE SITE PLAN; DRAWING P-1, AND CIVIL ENG. DRAWINGS.
8. PROVIDE BACKFLOW PREVENTION DEVICE FOR WATER SUPPLY LINE AT STREET SIDE OF METER IN RIGHT-OF-WAY BEFORE SPLITTING SUPPLY LINE FOR METERING.
9. SANITARY SEWER SYSTEM FOR THIS RESIDENCE SHALL BE TIED TO PUBLIC SEWER AT STREET RIGHT-OF-WAY; G.C. & MASTER PLUMBER SHALL LOCATE AND DETERMINE INVERT ELEV. SO AS TO DETERMINE ADEQUATE MAIN SEWER FALL FROM HOUSE.

WATER CONSUMPTION NOTES

10. MIN. PRESSURE FROM MAIN INCOMING WATER SOURCE SHALL BE 40 PSI, CONFIRM W/ UTILITY CO.

    MAX. PRESSURE SHALL BE 80 PSI. IF PRESSURE
11. EXCEEDS 80 PSI, GC/OWNER MUST INSTALL A PRESSURE REDUCING VALVE IMMEDIATELY AFTER WATER SERVICE AND METER ENTRY POINT.

    NOTE ON SHOWER/TUB VALVES:
    VALVES TO BOTH TUBS AND SHOWERS SHALL COMPLY
12. WITH 2017 F.B.C. RESID. PLUMBING SECTION 2708.3. SECTION STATES THAT VALVES ARE TO BE EQUIPPED WITH PRESSURE-BALANCE; THERMOSTATIC-MIXING SYSTEM WITH A HIGH LIMIT STOP, PER LATEST EDITIONS OF ASSE 1016 OR ASSE 1070. THIS LIMITS WATER TEMPERATURE TO A MAX. OF 120°F. G.C. AND PLUMBER SHALL DISCUSS AND UNDERSTAND THESE REQUIREMENTS. IN-LINE THERMOSTATIC VALVES SHALL NOT BE USED AS SUBSTITUTE FOR COMPLIANCE TO THIS SECTION.

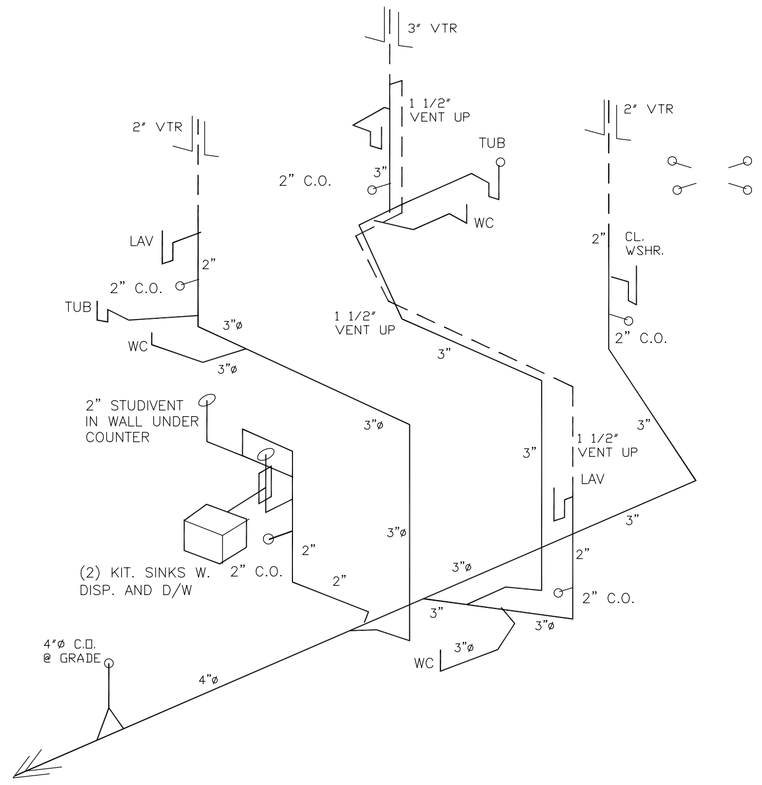

NEW 4"ø SEWER LINE TO SEWER AT STREET, THERE ARE APPROX. 25 F.U. AT LINE, WE ARE INCLUDING WASHER F.U.

SANITARY SEWER RISER

THIS RISER SHOWS PLUMBING FOR RESID. 'A' AT RIGHT SIDE. RISER FOR RESID. 'B' AT LEFT IS IDENTICAL BUT REVERSE.

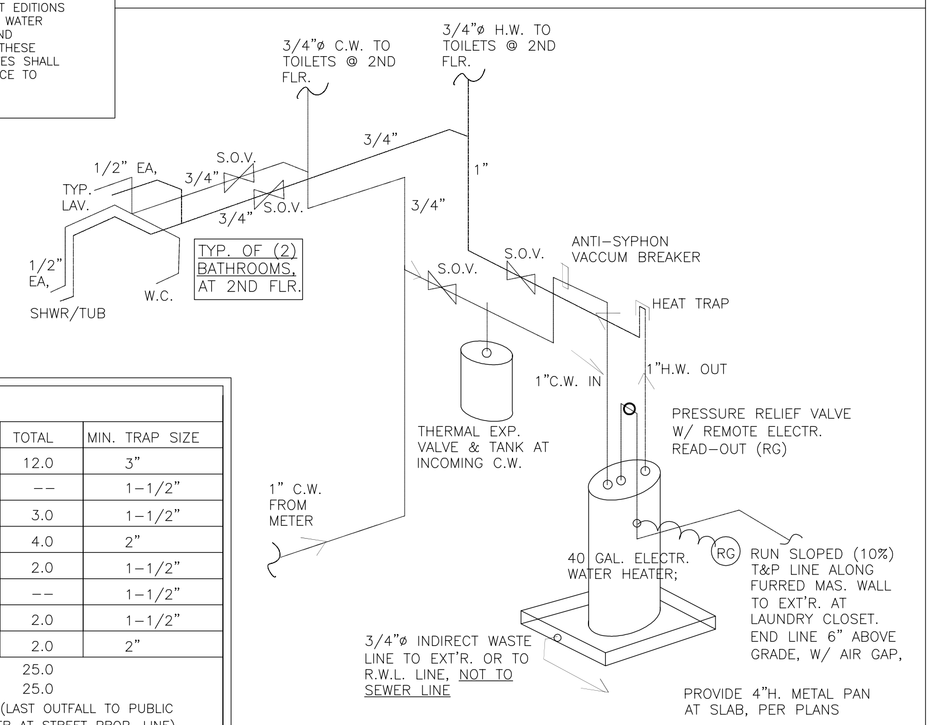

WATER HEATER AND WATER RISER

SANITARY SIZING

FIXTURE TYPE	NO.	FU/EA.	TOTAL	MIN. TRAP SIZE
WATER CLOSETS	3	4.0	12.0	3"
BIDETS	–	1.0	--	1-1/2"
LAVATORIES/SINKS	3	1.0	3.0	1-1/2"
SHOWERS/BATHTUBS	2	2.0	4.0	2"
DBLE. KITCHEN SINK	1	2.0	2.0	1-1/2"
LAUNDRY SINK	–	2.0	--	1-1/2"
DISHWASHER	1	2.0	2.0	1-1/2"
CLOTHES WASHER	1	2.0	2.0	2"
TOTAL	11		25.0	
TOTAL SANITARY FIXTURE UNITS			25.0	
MIN. SIZE MAIN SANITARY LINE:			4" (LAST OUTFALL TO PUBLIC SEWER AT STREET PROP. LINE)	

HOT & COLD WATER SIZING

FIXTURE TYPE	NO.	CWFU/EA.	TOTAL	HWFU/EA.	TOTAL
WATER CLOSETS	3	1.6	4.5	--	--
BIDETS	–	2.0	--	--	--
LAVATORIES/SINKS	3	2.2	6.6	0.5	1.5
SHOWERS/BATHTUBS	2	2.5	5.0	1.0	2.0
KITCHEN SINK	1	2.0	2.0	1.0	1.0
LAUNDRY SINK	–	2.2	--	--	--
DISHWASHER	1	0.5	0.5	1.4	1.4
CLOTHES WASHER	1	2.25	2.25	1.0	1.0
TOTAL			20.85		6.9

TOTAL H&C FU (20.85 + 6.9) = 27.75
MIN. SIZE WATER SERVICE AND METER: 1" (BASED ON LESS THAN 55 FU)

FIXTURE FLOW RATES AND CONSUMPTION

FIXTURE CONTROL	CONSUMPTION PER FIXTURE
LAVATORY FAUCETS	2.2 GPM @ 60 PSI
SHOWER HEADS *	2.5 GPM @ 80 PSI
KITCHEN SINKS/ BAR SINKS	2.2 GPM @ 60 PSI
WATER CLOSETS	1.0 GAL. PER FLUSHING CYCLE

* =BATHTUB HEAD FLOW RATES ARE THE SAME AS SHOWER HEADS.

PLUMBING SCHEDULES, SPECS. & RISER

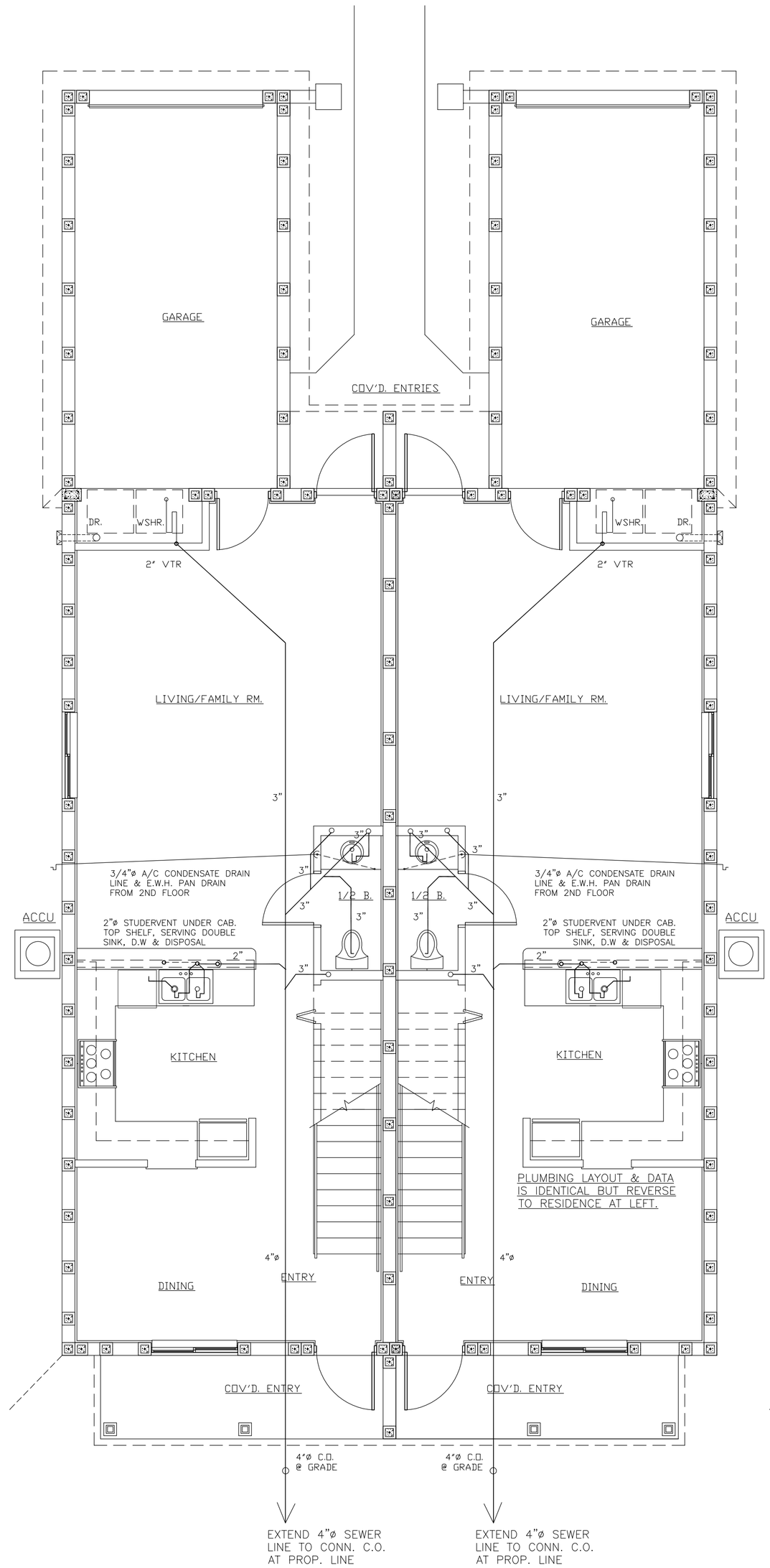

FIRST FLOOR PLUMBING PLAN

SCALE: 1/4" = 1'-0"

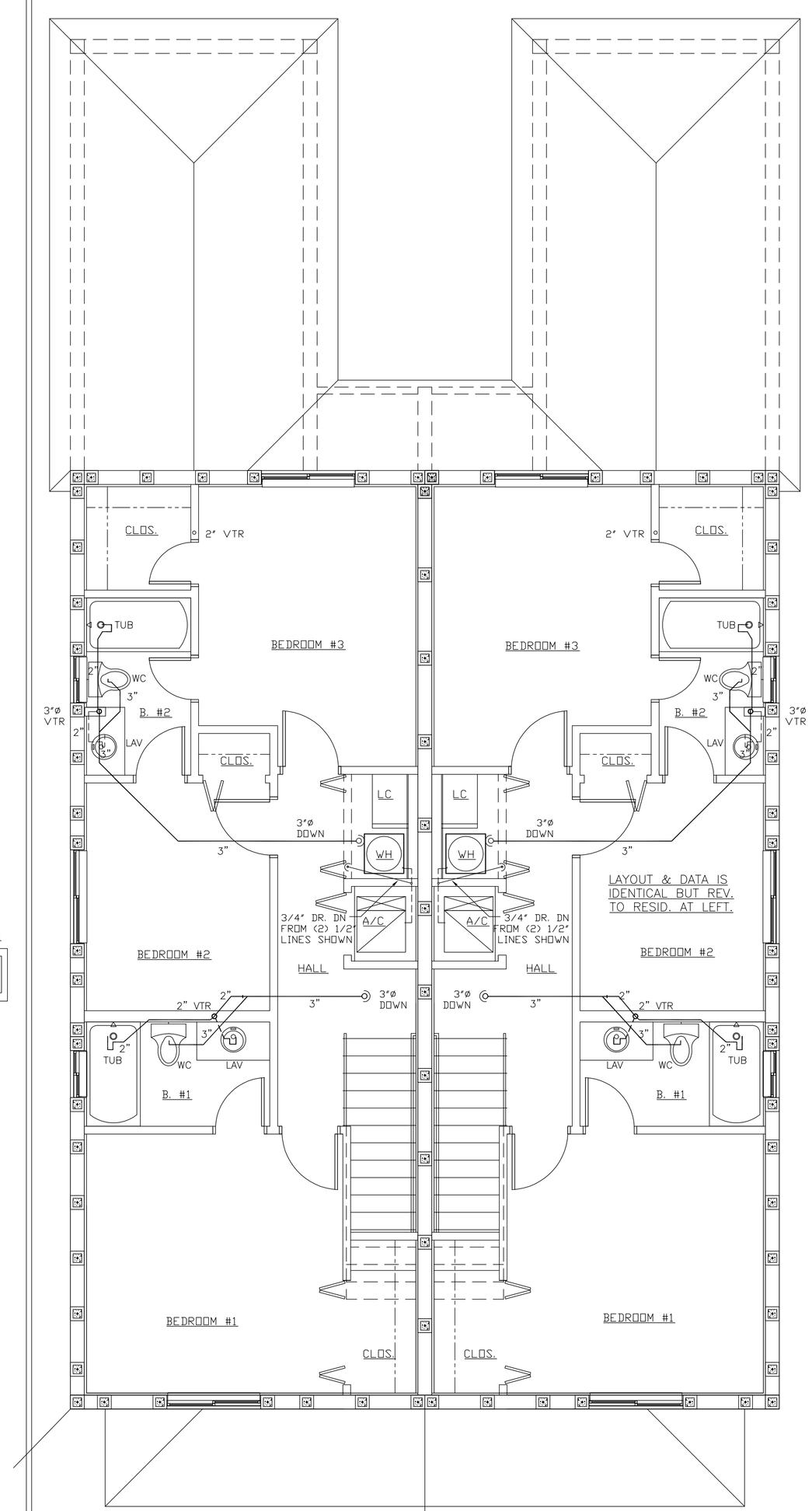

BUILDING TYPE 'B'
BUILDINGS #3, #4, #5 & #6

SECOND FLOOR PLUMBING PLAN

SCALE: 1/4" = 1'-0"

PER CITY MTG. 10-8-2018 DUPLIC. FOR PERMIT ISSUE 100% COMPLETE-SEPAR. 6 BLDGS S&3 -OCT. 15, 2018

OWNER REVIEW ISSUE- FOR APPR. & PERMIT ISSUE -100% COMPLETE OCT. 5-2018

OWNER REVIEW ISSUE- FOR APPR. -75% COMPL. AUG-29-2018

FIRST OWNER ISSUE- FOR REVIEW AND APPR. AUG-03-2018

ISSUE DATES

CRISPUS COMMONS PARCEL 'A' PH. 2 – 12 RESIDENTIAL TOWNHOUSES
EVANS STREET AND NORTH 22nd AVENUE, HOLLYWOOD, FLORIDA

L E BARRERA ARCHITECTURE, INC. – LOUIS E. BARRERA ARCHITECT
2707 NW 116TH TERRACE CORAL SPRINGS, FLA. E-MAIL: barrera1264@bellsouth.net

FLA. REGISTR. #AR008736

TELEPHONE 954.261.9657

DRAWN BY:

P-1

BLDGS. 3, 4, 5 & 6

© 2018 LOUIS BARRERA ARCHITECT – FOR USE ON STATED SITE ONLY – NOT TO BE COPIED WITHOUT ARCHITECT'S PERMISSION