ROYAL AIR FRAMES

For the DIY enthusiasts and makers, Royal Air Frames offers a comprehensive set of plans in DXF file. With our digital files, you can effortlessly create stunning models of world-class aircraft, bringing our stunning airframe designs to life with the comfort of your home or workshop.

Visit Our Website -

http://royalairframes.com/

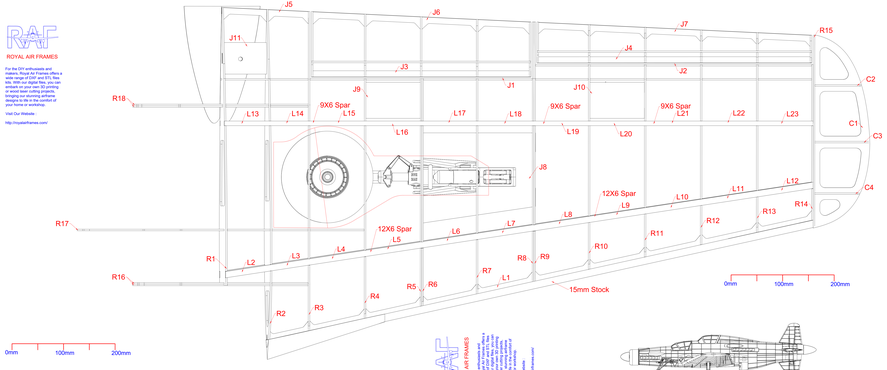

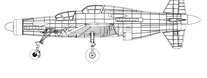

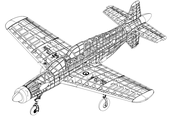



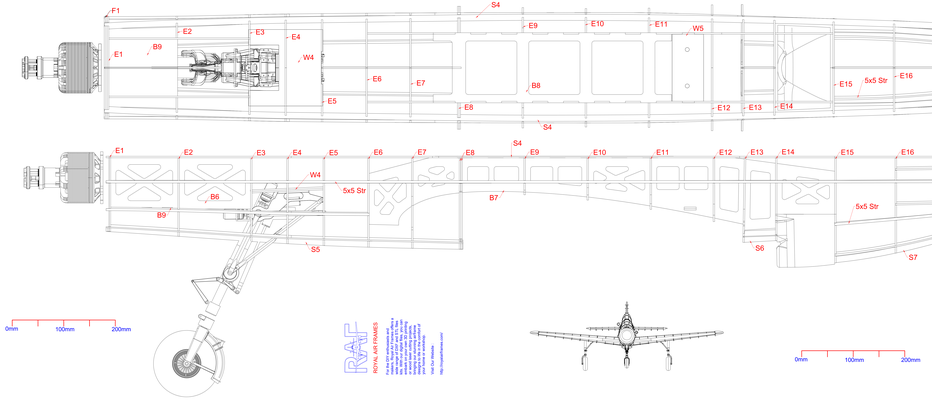

ROYAL AIR FRAMES

For the DIY enthusiasts and makers, Royal Air Frames offers a comprehensive set of plans in DXF file. With our digital files, you can effortlessly create stunning models of world-class aircraft, bringing our stunning airframe designs to life with the comfort of your home or workshop.

Visit Our Website -

http://royalairframes.com/