REV.

NEW 60'X120'X16' BUILDING FOR:
EASTBROOK SCHOOLS

MONROE TOWNSHIP, GRANT COUNTY INDIANA

THIS DOCUMENT IS TO SERVE FOR "NEW" STRUCTURE DOCUMENTED HERE-IN ONLY AT ADDRESS LISTED. ALL OTHER STRUCTURAL AND CIVIL DESIGN OUTSIDE OF THE SCOPE OF THESE DRAWINGS BY OTHERS.

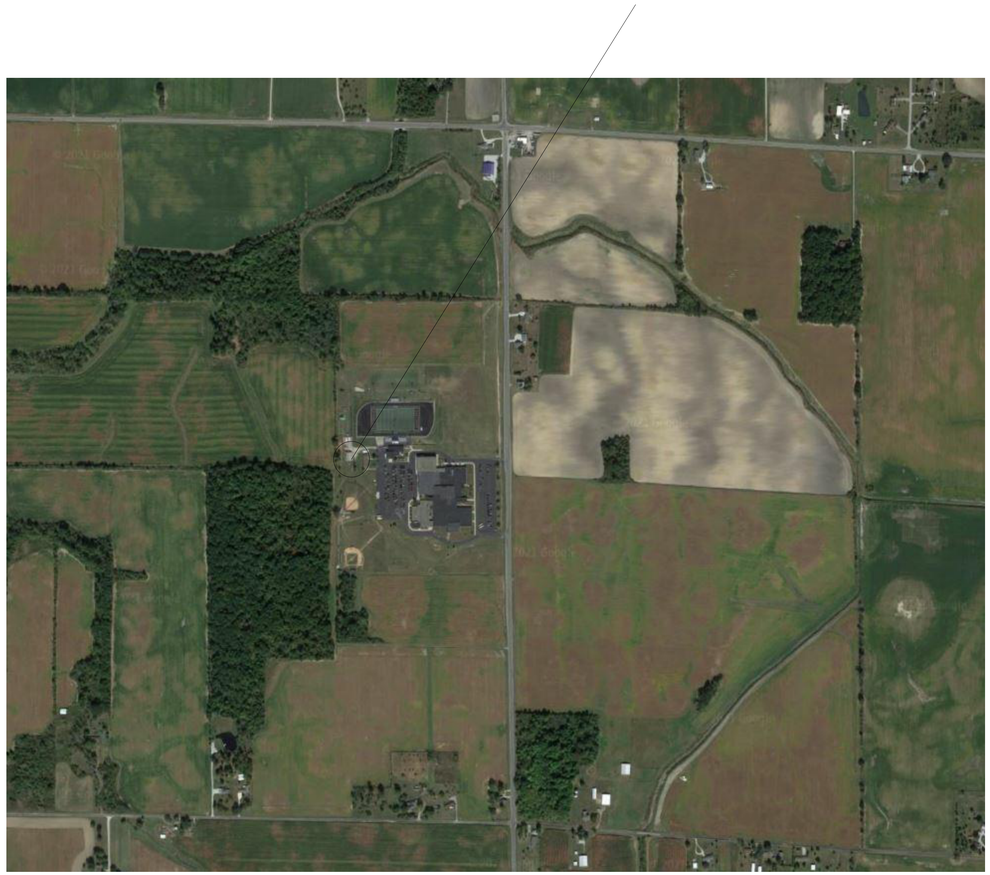

BUILDING DATA

BUILDING USE: STORAGE GARAGE
OCCUPANCY GROUP: MULTI-USE (S-1, M, B)
CONSTRUCTION TYPE: VB - 0 HOUR RATING
HEIGHT ALLOWED: 40'-0"
ACTUAL HEIGHT: 27' 6"
AREA ALLOWED: 15,750 SQ. FT.
BUILDING AREA: 13,783 SQ. FT.
13,783 < 15,750

SHEET LIST

SHEET NUMBER	SHEET NAME
T01	COVER PAGE
C01	SITE PLAN
C02	EXISTING CONDITIONS/DEMO PLAN
C03	DRAINAGE PLAN
C04	EROSION CONTROL - PRE CONSTRUCTION
C05	EROSION CONTROL - POST CONSTRUCTION
C06	SECTION VIEWS & DETAILS
F01	FOUNDATION PLAN
F02	CONCRETE NOTES
A01	FLOOR PLAN
A02	FIRE & LIFE SAFETY PLAN
A03	FLOOR PLAN - MAIN FLOOR CALLOUTS
A04	BUILDING SECTION VIEWS AND DETAILS
A05	RESTROOM AND STAIR SECTION VIEWS
A06	STAIR DETAILS
A07	LOFT - FLOOR FRAMING PLAN
A08	ROOF FRAMING PLAN
A09	ELEVATIONS
M01	MECHANICAL PLAN
E01	ELECTRICAL PLAN
P01	PLUMBING PLAN
P02	PLUMBING ISOMETRICS
P03	PLUMBING ISOMETRIC DETAILS
P04	PLUMBING FIXTURE SCHEDULE
G01	MEP NOTES

DESIGN LOADS

BUILDING CODE:
2012 INTERNATIONAL BUILDING CODE
2014 INDIANA BUILDING CODE

A) GROUND SNOW (p/g).....20 PSF

B) ROOF LOADS:
I) ROOF LIVE.....20 PSF
II) DEAD LOAD.....12 PSF
i) TOP CHORD.....5 PSF
ii) BOTTOM CHORD.....5 PSF
III) COLLATERAL LOAD.....2 PSF

C) FLOOR LOADS:
I) LIVE LOAD:
i) STORAGE AREAS.....125 PSF
ii) GARAGE.....125 PSF
iii) LOFT.....60 PSF
II) DEAD LOAD:
i) GARAGE.....10 PSF
ii) LOFT.....10 PSF

D) WIND LOAD:
115 MPH
CAT. II
EXPOSURE C

MSS Engineering, LLC
ENGINEERING, CONSULTING, & DESIGN
414 W 5th St., Auburn, IN 46706
Phone: (260) 267-7414
Email: tamcdaniel@mssengineer.com
Travis A. McDaniel, PE

TRAVIS A. McDANIEL
REGISTERED
PE11800805
STATE OF INDIANA
PROFESSIONAL ENGINEER

Travis A. McDaniel
05/26/23

PROJECT LOCATION:
560 S 900 E
MARION, IN 46953

PROJECT NAME:
BID SPEC & DESIGN

DRAWING TITLE:
COVER PAGE

REVISIONS:

NO.	DATE	DESCRIPTION	BY

JOB NUMBER: 22.081.171

DRAWN BY: CAS

ENGINEERED BY: CAS

START DATE: 05/12/21

PROGRESS DATE: 7/13/21

CERTIFIED DATE: 05/26/23

SCALE:

PAGE NUMBER:

T01 OF T01 SHEETS

REV.

REV. 1

NOTE: DIMENSIONS ARE APPROXIMATE. REFER TO PROFESSIONAL SURVEY FOR PRECISE LOT LINE LAYOUT. INFORMATION PROVIDED GATHERED FROM PUBLIC RECORDS.

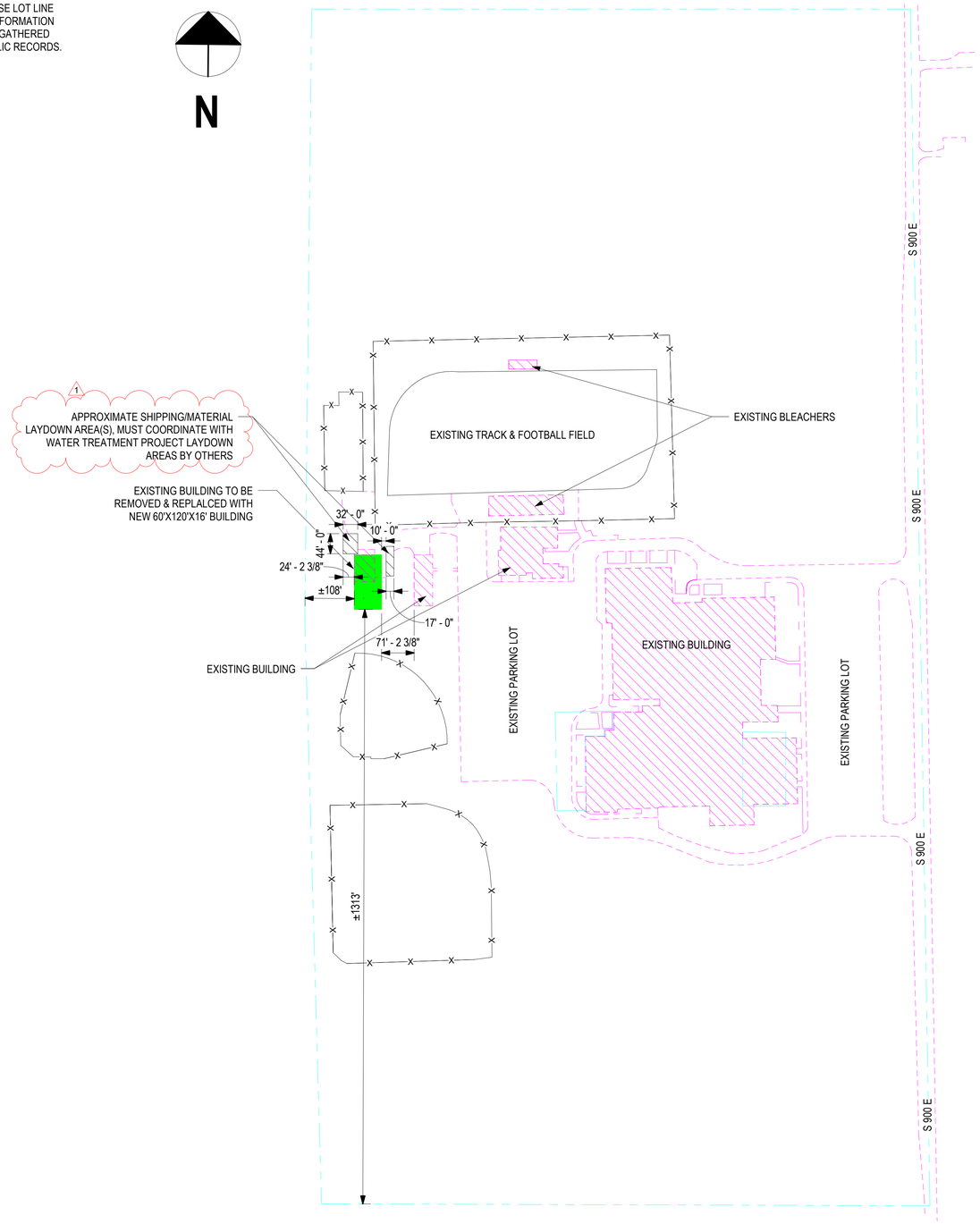

1 SITE PLAN
1" = 140'-0"

LINETYPE LEGEND

- NEW BUILDING
- EXISTING BUILDING
- PROPERTY LINE
- SETBACK
- SURFACE EDGE
- PARKING LOT LINE
- FENCE
- SOIL REGION
- DEMO
- OVERHEAD
- TELECOM/DATA
- SWALE
- ELECTRIC
- GAS PIPE
- WATER PIPE
- SANITARY PIPE
- STORM PIPE
- EROSION CONTROL
- LINE OF DISTURBANCE
- NATIONAL POLLUTION DISCHARGE ELIMINATION SYSTEM BOUNDARY
- PROPOSED CONTOUR
- EXISTING CONTOUR
- EXISTING ELECTRIC
- EXISTING GAS PIPE
- EXISTING WATER PIPE
- EXISTING STORM PIPE
- EXISTING SANITARY PIPE
- EXISTING FENCE

LINETYPE LEGEND
1" = 20'-0"

REGION LEGEND

- NEW BUILDING
- EXISTING BUILDING
- DRIVEWAY/SIDEWALKS/ROADS
- WATER
- RIP RAP
- TEMPORARY SEEDING
- PERMANENT SEEDING

REGION LEGEND
1/4" = 1'-0"

SYMBOL LEGEND

- MANHOLE
- DRYWELL
- SANITARY SEWER CLEANOUT
- WATER VALVE
- GAS VALVE
- FIRE HYDRANT
- SPOT ELEVATION
- DECIDUOUS TREE
- CONIFEROUS TREE

SYMBOL LEGEND
1/4" = 1'-0"

MSS Engineering, LLC
ENGINEERING, CONSULTING, & DESIGN
414 W 5th St., Auburn, IN 46706
Phone: (260) 267-7414
Email: tamcdaniel@mssengineer.com
Travis A. McDaniel, PE

TRAVIS A. McDANIEL REGISTERED PE11800805 STATE OF INDIANA PROFESSIONAL ENGINEER

Travis A. McDaniel
05/26/23

PROJECT LOCATION:
560 S 900 E
MARION, IN 46953

PROJECT NAME:
BID SPEC & DESIGN

DRAWING TITLE:
SITE PLAN

REVISIONS:

NO.	DATE	DESCRIPTION	BY
1	5/26/23	SITE PLAN UPDATES	TAM

JOB NUMBER: 22.081.171

DRAWN BY: CAS

ENGINEERED BY: CAS

START DATE: 05/12/21

PROGRESS DATE: 7/13/21

CERTIFIED DATE: 05/26/23

SCALE: As indicated

PAGE NUMBER:

C01 OF C06 SHEETS

REV. 1

REV.

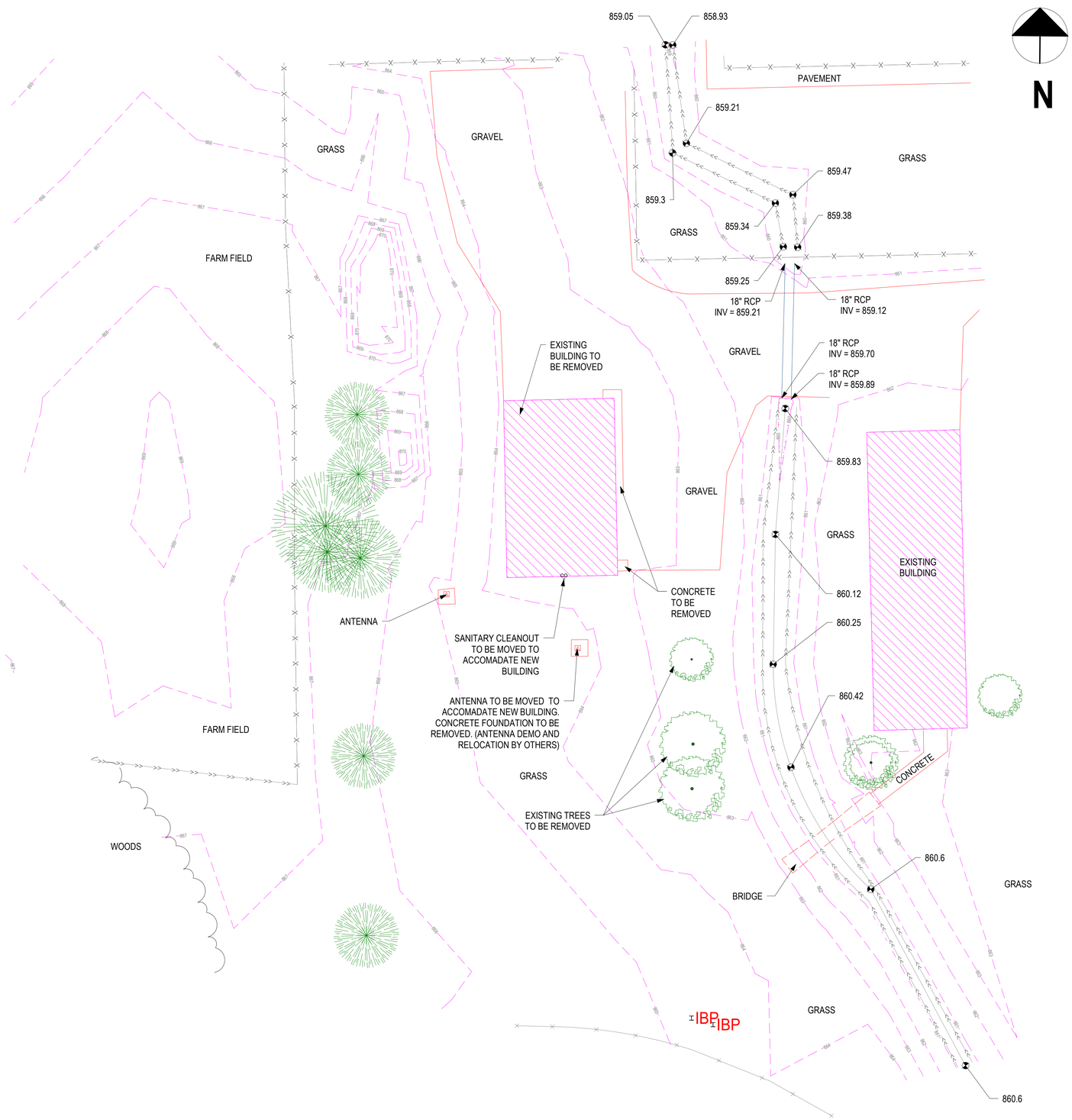

1 EXISTING CONDITIONS
1" = 20'-0"

LINETYPE LEGEND

	NEW BUILDING
	EXISTING BUILDING
	PROPERTY LINE
	SETBACK
	SURFACE EDGE
	PARKING LOT LINE
X X	FENCE
	SOIL REGION
	DEMO
	OVERHEAD
	TELECOM/DATA
>> >>	SWALE
E E	ELECTRIC
G G	GAS PIPE
W W	WATER PIPE
SS SS	SANITARY PIPE
ST ST	STORM PIPE
	EROSION CONTROL
LOD LOD	LINE OF DISTURBANCE
NPDES NPDES	NATIONAL POLLUTION DISCHARGE ELIMINATION SYSTEM BOUNDARY
	PROPOSED CONTOUR
	EXISTING CONTOUR
E E	EXISTING ELECTRIC
G G	EXISTING GAS PIPE
W W	EXISTING WATER PIPE
SS SS	EXISTING STORM PIPE
ST ST	EXISTING SANITARY PIPE
X X	EXISTING FENCE

LINETYPE LEGEND
1" = 20'-0"

REGION LEGEND

- NEW BUILDING
- EXISTING BUILDING
- DRIVEWAY/SIDEWALKS/ROADS
- WATER
- RIP RAP
- TEMPORARY SEEDING
- PERMANENT SEEDING

REGION LEGEND
1/4" = 1'-0"

SYMBOL LEGEND

- MH MANHOLE
- DW DRYWELL
- SANITARY SEWER CLEANOUT
- WATER VALVE
- GAS VALVE
- FIRE HYDRANT
- SPOT ELEVATION
- DECIDUOUS TREE
- CONIFEROUS TREE

SYMBOL LEGEND
1/4" = 1'-0"

MSS Engineering, LLC
ENGINEERING, CONSULTING, & DESIGN
414 W 5th St., Auburn, IN 46706
Phone: (260) 267-7414
Email: tamcdaniel@mssengineer.com
Travis A. McDaniel, PE

TRAVIS A. McDANIEL
REGISTERED
PE11800805
STATE OF INDIANA
PROFESSIONAL ENGINEER

Travis A. McDaniel
05/26/23

PROJECT LOCATION:
560 S 900 E
MARION, IN 46953

PROJECT NAME:
BID SPEC & DESIGN

DRAWING TITLE:
EXISTING CONDITIONS/DEMO PLAN

REVISIONS:

NO.	DATE	DESCRIPTION	BY

JOB NUMBER:
22.081.171

DRAWN BY: CAS

ENGINEERED BY: CAS

START DATE: 05/12/21

PROGRESS DATE: 7/13/21

CERTIFIED DATE: 05/26/23

SCALE: As indicated

PAGE NUMBER:

C02 OF C06 SHEETS

REV.

REV. 1

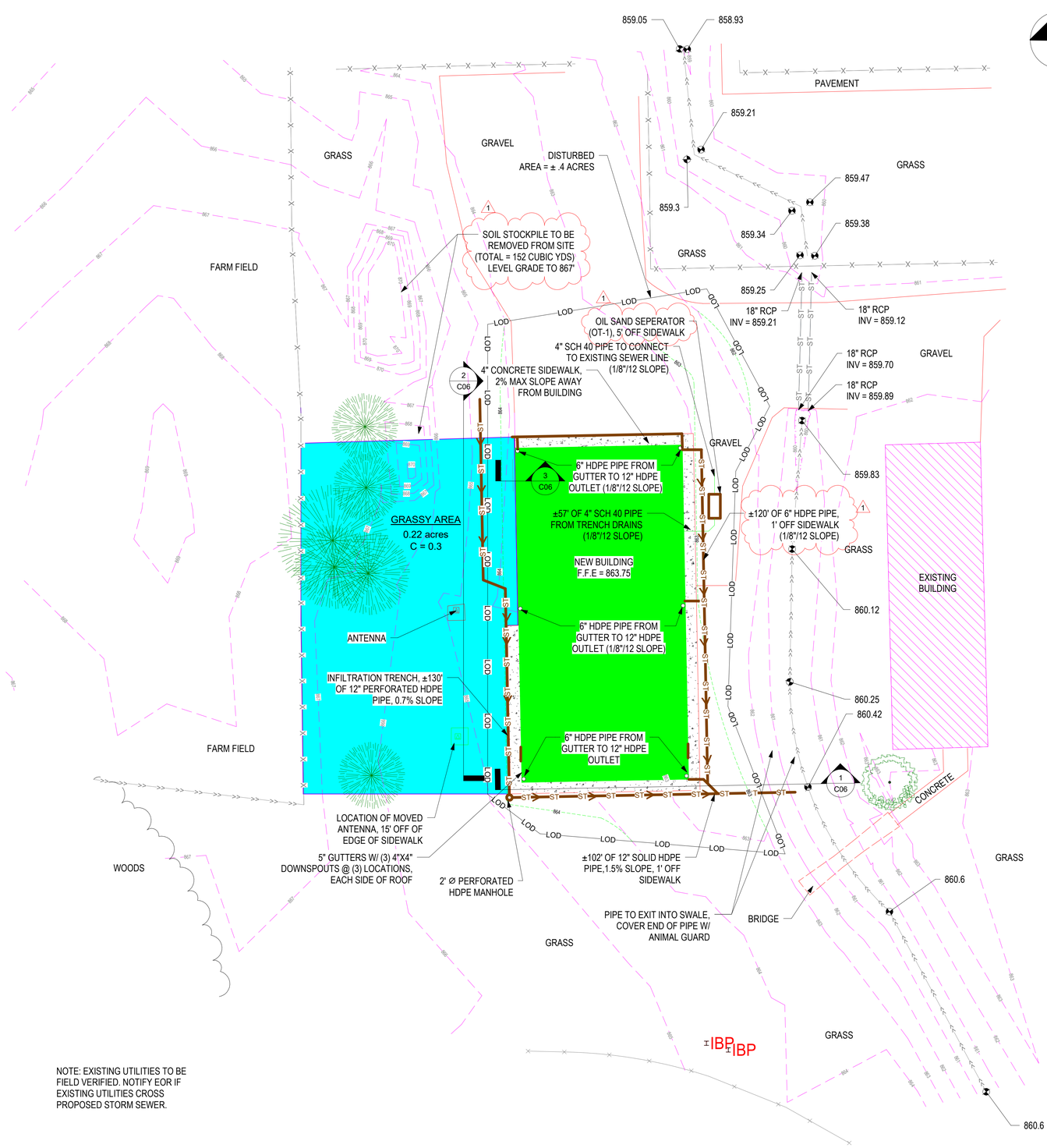

NOTE: EXISTING UTILITIES TO BE FIELD VERIFIED. NOTIFY EOR IF EXISTING UTILITIES CROSS PROPOSED STORM SEWER.

1 DRAINAGE PLAN
1" = 20'-0"

LINETYPE LEGEND

- NEW BUILDING
- EXISTING BUILDING
- PROPERTY LINE
- SETBACK
- SURFACE EDGE
- PARKING LOT LINE
- FENCE
- SOIL REGION
- DEMO
- OVERHEAD
- TELECOM/DATA
- SWALE
- ELECTRIC
- GAS PIPE
- WATER PIPE
- SANITARY PIPE
- STORM PIPE
- EROSION CONTROL
- LINE OF DISTURBANCE
- NATIONAL POLLUTION DISCHARGE ELIMINATION SYSTEM BOUNDARY
- PROPOSED CONTOUR
- EXISTING CONTOUR
- EXISTING ELECTRIC
- EXISTING GAS PIPE
- EXISTING WATER PIPE
- EXISTING STORM PIPE
- EXISTING SANITARY PIPE
- EXISTING FENCE

LINETYPE LEGEND
1" = 20'-0"

SYMBOL LEGEND

- MANHOLE
- DRYWELL
- SANITARY SEWER CLEANOUT
- WATER VALVE
- GAS VALVE
- FIRE HYDRANT
- SPOT ELEVATION
- DECIDUOUS TREE
- CONIFEROUS TREE

SYMBOL LEGEND
1/4" = 1'-0"

REGION LEGEND

- NEW BUILDING
- EXISTING BUILDING
- DRIVEWAY/SIDEWALKS/ROADS
- WATER
- RIP RAP
- TEMPORARY SEEDING
- PERMANENT SEEDING

REGION LEGEND
1/4" = 1'-0"

DRAINAGE CALCULATIONS

GOVERNING EQUATIONS
Q = CIA

WHERE:
Q = PEAK DISCHARGE (CFS)
C = RUNOFF COEFFICIENT
i = RAINFALL INTENISTY 100YR, 24HR (IN/HR)
A = WATERSHED AREA (ACRES)

$Q = (k/n)(A)(R_H^{2/3})(S^{1/2})$

WHERE:
Q = FLOW RATE (CFS)
k = 1.49 (US UNITS)
n = MANNING'S ROUGHNESS COEFFICIENT
A = CROSS SECTIONAL AREA OF FLOW (FT^2)
R_H = HYDRAULIC RADIUS (FT)
S = SLOPE(FT/FT)

PEAK DISCHARGE
- RAINFALLL INTENSITY REFLECTS A 25 YR STORM EVENT OVER A 24 HOUR PERIOD

GRASSY AREA:

Q = (.41)(4.67)(.22) => **Q = 0.42 cfs**

IMPERVIOUS AREA:

Q = (0.9)(4.67)(.17) => **Q = 0.71 CFS**

OUTFLOW PIPE CAPACITY:
- PIPE TO BE DESIGNED AS HALF FLOW

PIPE LENGTH = 128 FT
PIPE DIAMETER = 1 FT

$Q = (k/n)(A)(R_H^{2/3})(S^{1/2})$ => $(1.49/.022)(0.39)(0.25^{2/3})(.015^{1/2})$
=> **Q_{out} = 1.28 CFS**

CONCLUSION

Q_{in} = 0.42 + 0.71 => **Q_{in} = 1.13 CFS**
Q_{out} = 1.28 CFS

=> **Q_{in} < Q_{out} OK**

MSS Engineering, LLC
ENGINEERING, CONSULTING, & DESIGN
414 W 5th St., Auburn, IN 46706
Phone: (260) 267-7414
Email: tamcdaniel@mssengineer.com
Travis A. McDaniel, PE

TRAVIS A. McDANIEL REGISTERED PE11800805 STATE OF INDIANA PROFESSIONAL ENGINEER
Travis A. McDaniel
05/26/23

PROJECT LOCATION:
560 S 900 E
MARION, IN 46953

PROJECT NAME:
BID SPEC & DESIGN

DRAWING TITLE:
DRAINAGE PLAN

REVISIONS:

NO.	DATE	DESCRIPTION	BY
1	5/26/23	SITE PLAN UPDATES	TAM

JOB NUMBER: 22.081.171

DRAWN BY: CAS
ENGINEERED BY: CAS

START DATE: 05/12/21
PROGRESS DATE: 7/13/21
CERTIFIED DATE: 05/26/23
SCALE: As indicated
PAGE NUMBER:

C03 OF C06 SHEETS

REV. 1

REV.

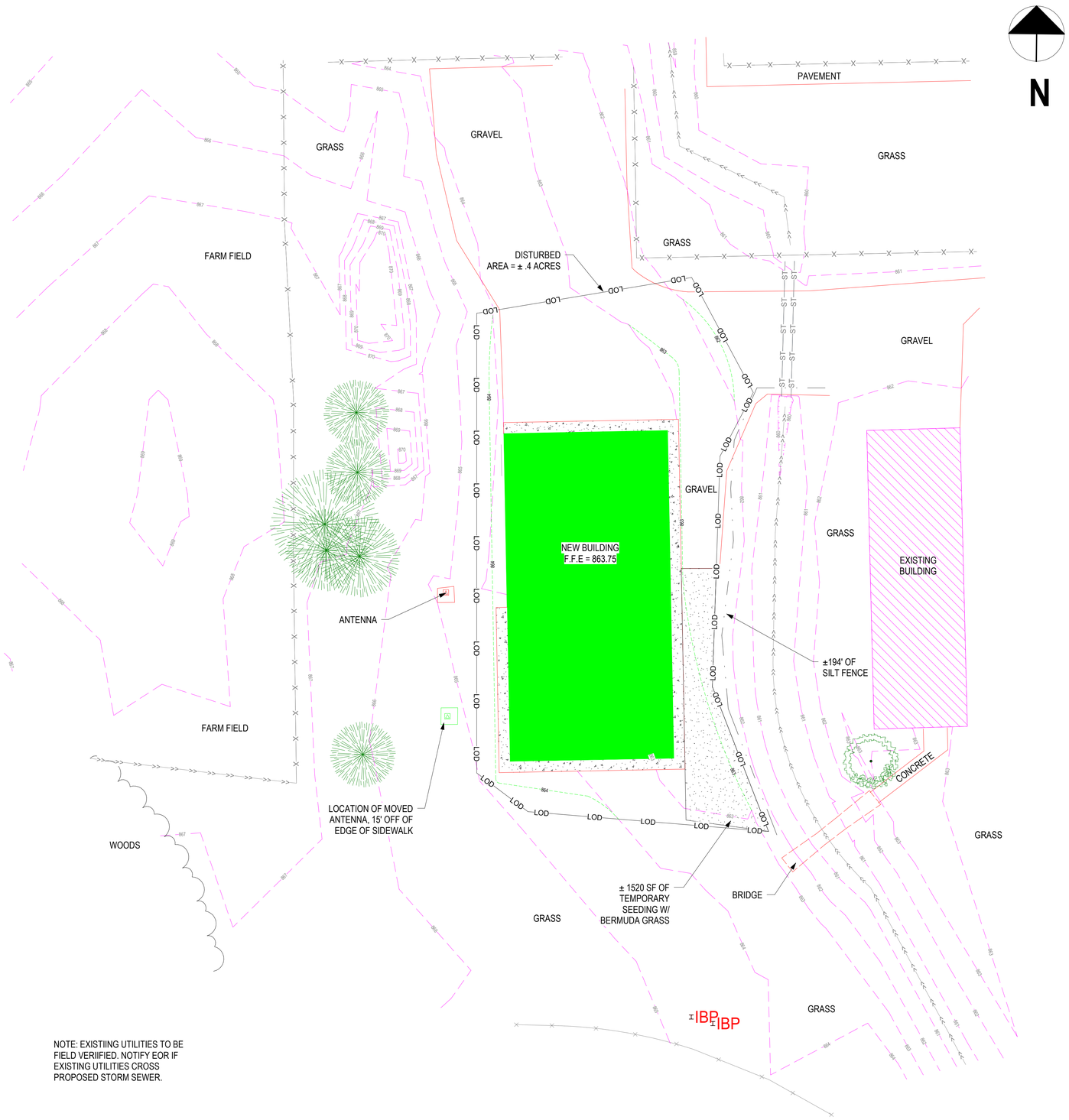

NOTE: EXISTIING UTILITIES TO BE FIELD VERIIFIED. NOTIFY EOR IF EXISTING UTILITIES CROSS PROPOSED STORM SEWER.

1 EROSION CONTROL PLAN - PRE CONSTRUCTION
1" = 20'-0"

LINETYPE LEGEND

- NEW BUILDING
- EXISTING BUILDING
- PROPERTY LINE
- SETBACK
- SURFACE EDGE
- PARKING LOT LINE
- FENCE
- SOIL REGION
- DEMO
- OVERHEAD
- TELECOM/DATA
- SWALE
- ELECTRIC
- GAS PIPE
- WATER PIPE
- SANITARY PIPE
- STORM PIPE
- EROSION CONTROL
- LINE OF DISTURBANCE
- NATIONAL POLLUTION DISCHARGE ELIMINATION SYSTEM BOUNDARY
- PROPOSED CONTOUR
- EXISTING CONTOUR
- EXISTING ELECTRIC
- EXISTING GAS PIPE
- EXISTING WATER PIPE
- EXISTING STORM PIPE
- EXISTING SANITARY PIPE
- EXISTING FENCE

LINETYPE LEGEND
1" = 20'-0"

REGION LEGEND

- NEW BUILDING
- EXISTING BUILDING
- DRIVEWAY/SIDEWALKS/ROADS
- WATER
- RIP RAP
- TEMPORARY SEEDING
- PERMANENT SEEDING

REGION LEGEND
1/4" = 1'-0"

SYMBOL LEGEND

- MANHOLE
- DRYWELL
- SANITARY SEWER CLEANOUT
- WATER VALVE
- GAS VALVE
- FIRE HYDRANT
- SPOT ELEVATION
- DECIDUOUS TREE
- CONIFEROUS TREE

SYMBOL LEGEND
1/4" = 1'-0"

MSS Engineering, LLC
ENGINEERING, CONSULTING, & DESIGN
414 W 5th St., Auburn, IN 46706
Phone: (260) 267-7414
Email: tamcdaniel@mssengineer.com
Travis A. McDaniel, PE

TRAVIS A. McDANIEL
REGISTERED
PE11800805
STATE OF INDIANA
PROFESSIONAL ENGINEER

Travis A. McDaniel
05/26/23

PROJECT LOCATION:
560 S 900 E
MARION, IN 46953

PROJECT NAME:
BID SPEC & DESIGN

DRAWING TITLE:
EROSION CONTROL - PRE CONSTRUCTION

REVISIONS:

NO.	DATE	DESCRIPTION	BY

JOB NUMBER: 22.081.171

DRAWN BY: CAS

ENGINEERED BY: CAS

START DATE: 05/12/21

PROGRESS DATE: 7/13/21

CERTIFIED DATE: 05/26/23

SCALE: As indicated

PAGE NUMBER:

C04 OF C06 SHEETS

REV.

REV.

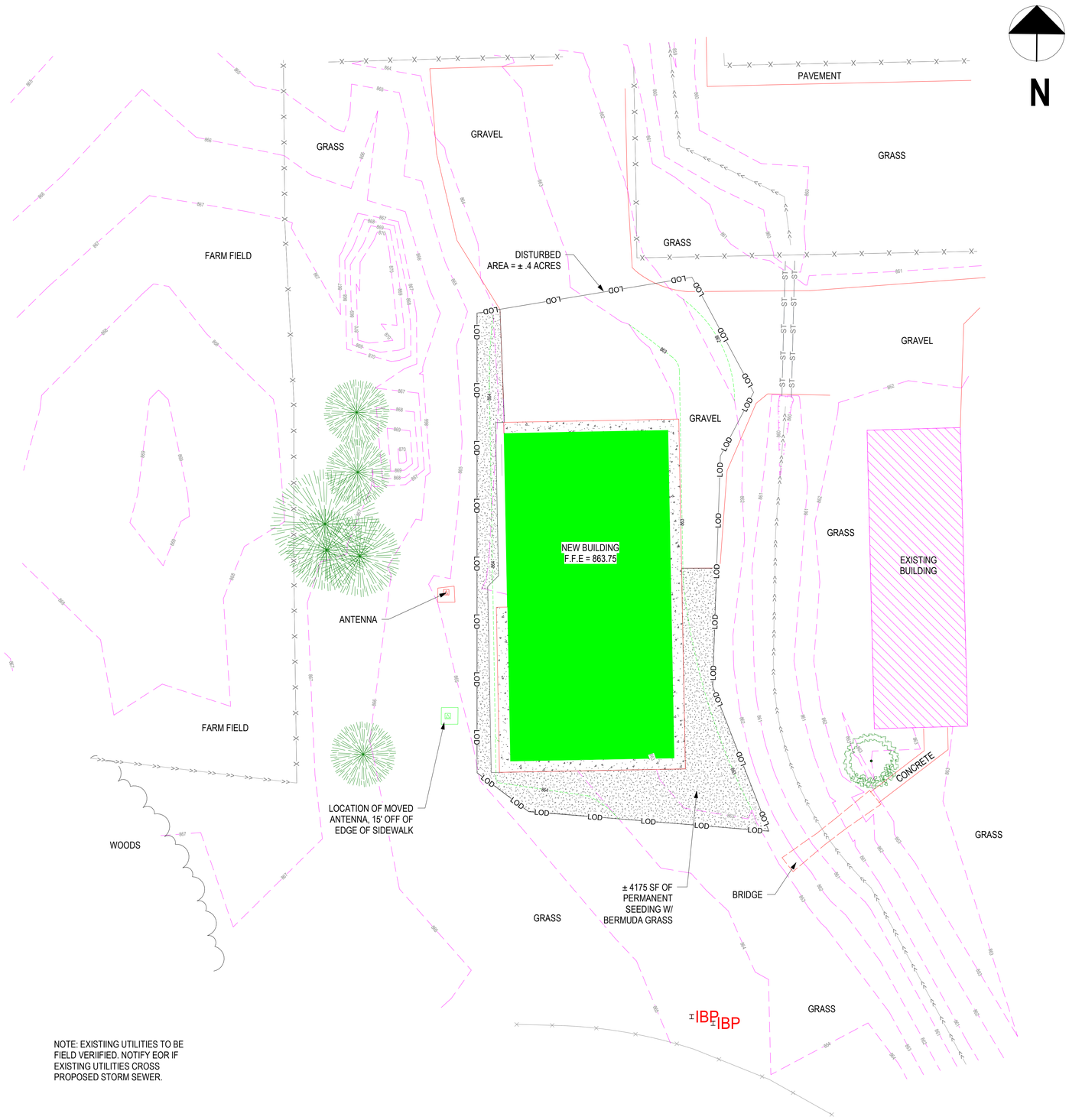

NOTE: EXISTIING UTILITIES TO BE FIELD VERIIFIED. NOTIFY EOR IF EXISTING UTILITIES CROSS PROPOSED STORM SEWER.

1 EROSION CONTROL PLAN - POST CONSTRUCTION
1" = 20'-0"

LINETYPE LEGEND

	NEW BUILDING
	EXISTING BUILDING
	PROPERTY LINE
	SETBACK
	SURFACE EDGE
	PARKING LOT LINE
X X	FENCE
	SOIL REGION
	DEMO
	OVERHEAD
	TELECOM/DATA
>> >>	SWALE
E E	ELECTRIC
G G	GAS PIPE
W W	WATER PIPE
SS SS	SANITARY PIPE
ST ST	STORM PIPE
	EROSION CONTROL
LOD LOD	LINE OF DISTURBANCE
NPDES NPDES	NATIONAL POLLUTION DISCHARGE ELIMINATION SYSTEM BOUNDARY
	PROPOSED CONTOUR
	EXISTING CONTOUR
E E	EXISTING ELECTRIC
G G	EXISTING GAS PIPE
W W	EXISTING WATER PIPE
SS SS	EXISTING STORM PIPE
ST ST	EXISTING SANITARY PIPE
X X	EXISTING FENCE

LINETYPE LEGEND
1" = 20'-0"

REGION LEGEND

- NEW BUILDING
- EXISTING BUILDING
- DRIVEWAY/SIDEWALKS/ROADS
- WATER
- RIP RAP
- TEMPORARY SEEDING
- PERMANENT SEEDING

REGION LEGEND
1/4" = 1'-0"

SYMBOL LEGEND

- MH MANHOLE
- DW DRYWELL
- SANITARY SEWER CLEANOUT
- WATER VALVE
- GAS VALVE
- FIRE HYDRANT
- SPOT ELEVATION
- DECIDUOUS TREE
- CONIFEROUS TREE

SYMBOL LEGEND
1/4" = 1'-0"

MSS Engineering, LLC
ENGINEERING, CONSULTING, & DESIGN
414 W 5th St., Auburn, IN 46706
Phone: (260) 267-7414
Email: tamcdaniel@mssengineer.com
Travis A. McDaniel, PE

TRAVIS A. McDANIEL
REGISTERED
PE11800805
STATE OF INDIANA
PROFESSIONAL ENGINEER

Travis A. McDaniel
05/26/23

PROJECT LOCATION:
560 S 900 E
MARION, IN 46953

PROJECT NAME:
BID SPEC & DESIGN

DRAWING TITLE:
EROSION CONTROL - POST CONSTRUCTION

REVISIONS:

NO.	DATE	DESCRIPTION	BY

JOB NUMBER: 22.081.171

DRAWN BY: CAS

ENGINEERED BY: CAS

START DATE: 05/12/21

PROGRESS DATE: 7/13/21

CERTIFIED DATE: 05/26/23

SCALE: As indicated

PAGE NUMBER:

C05 OF C06 SHEETS

REV.

REV.

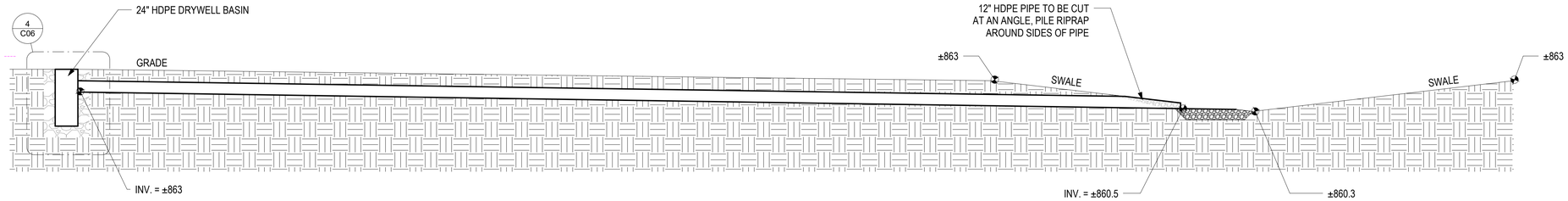

1 OUTLET PIPE - PROFILE VIEW
3/16" = 1'-0"

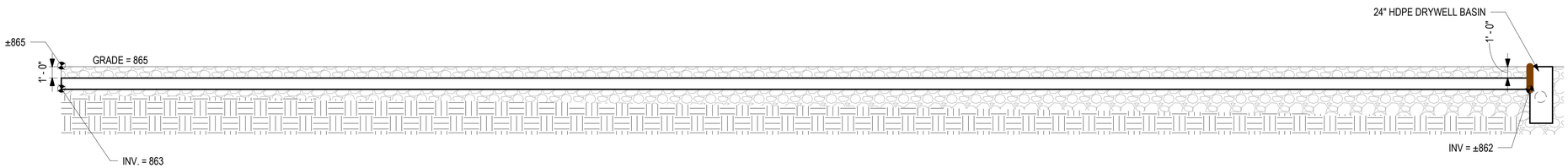

2 INFILTRATION TRENCH - PROFILE VIEW
3/16" = 1'-0"

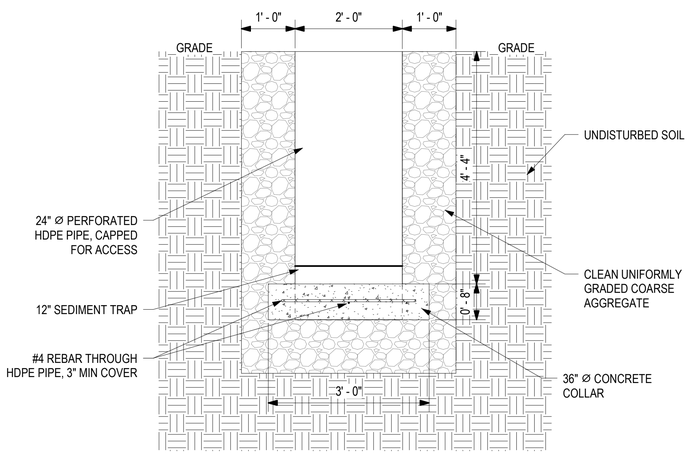

4 DRYWELL BASIN - CALLOUT
3/4" = 1'-0"

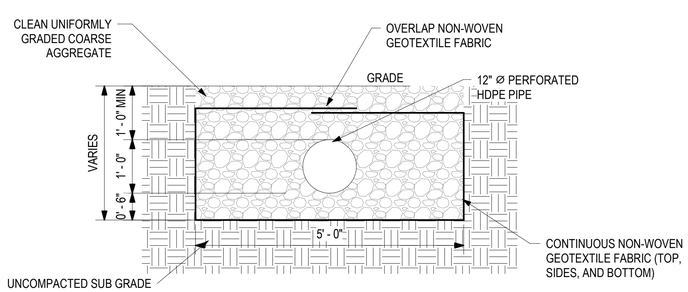

3 INFILTRATION TRENCH - SECTION VIEW
3/4" = 1'-0"

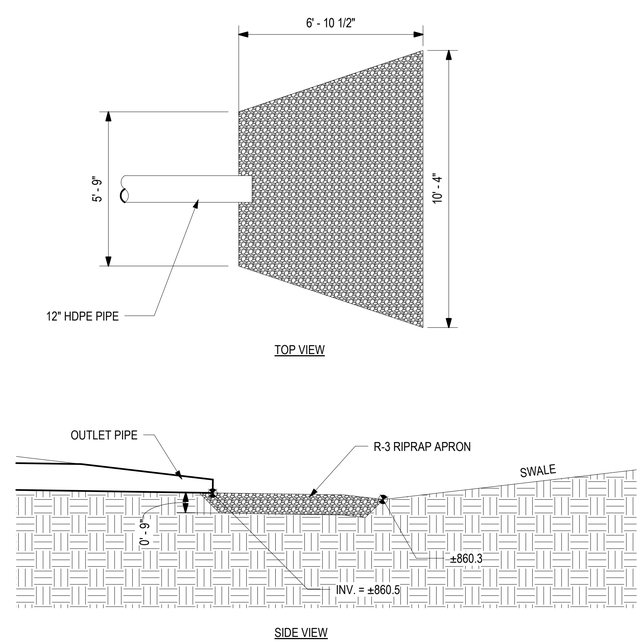

5 RIPRAP APRON DETAILS
3/8" = 1'-0"

TEMPORARY PERIMETER PROTECTION SILT FENCE

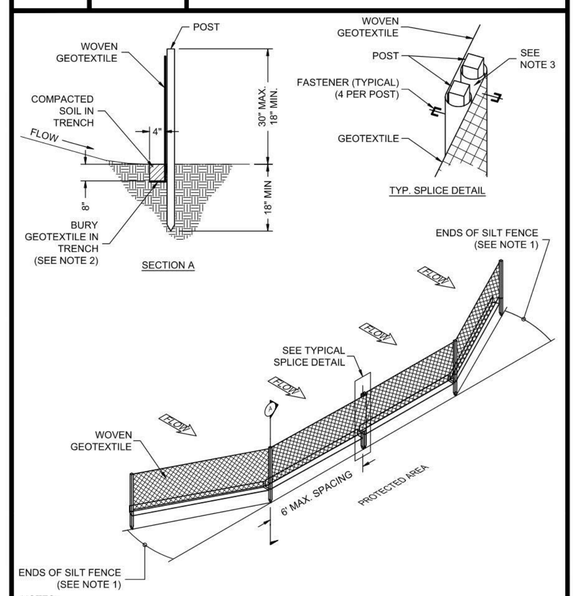

NOTES:
1. INSTALL THE ENDS OF THE SILT FENCE TO POINT SLIGHTLY UP-SLOPE TO PREVENT SEDIMENT FROM FLOWING AROUND THE ENDS OF THE FENCE.
2. GEOTEXTILE FABRIC LAID ON DOWN-SLOPE SIDE AND BOTTOM OF TRENCH. DURING EXCAVATION, MINIMIZE DISTURBING THE GROUND AROUND TRENCH AS MUCH AS IS FEASIBLE AND SMOOTH SURFACE FOLLOWING EXCAVATION TO AVOID CONCENTRATING FLOWS.
3. SPLICED FENCE SECTIONS SHALL BE CLOSE ENOUGH TOGETHER TO PREVENT SILT-LADEN WATER FROM ESCAPING THROUGH THE FENCE AT THE OVERLAP. JOINING SECTIONS SHALL NOT BE PLACED IN LOW SPOTS OR IN SUMP LOCATIONS.

EROS-2-1

MSS Engineering, LLC
ENGINEERING, CONSULTING, & DESIGN
414 W 5th St., Auburn, IN 46706
Phone: (260) 267-7414
Email: tamcdaniel@mssengineer.com
Travis A. McDaniel, PE

TRAVIS A. McDANIEL
REGISTERED
PE11800805
STATE OF INDIANA
PROFESSIONAL ENGINEER

Travis A. McDaniel
05/26/23

PROJECT LOCATION:
560 S 900 E
MARION, IN 46953

PROJECT NAME:
BID SPEC & DESIGN

DRAWING TITLE:
SECTION VIEWS & DETAILS

REVISIONS:

NO.	DATE	DESCRIPTION	BY

JOB NUMBER: 22.081.171

DRAWN BY: CAS

ENGINEERED BY: CAS

START DATE: 05/12/21

PROGRESS DATE: 7/13/21

CERTIFIED DATE: 05/26/23

SCALE: As indicated

PAGE NUMBER:

C06 OF C06 SHEETS

REV.

REV. 1

NOTE: ALL SIDEWALKS TO BE 4FT WIDE, TROWEL EDGED, AND BROOMED FINISH. ALL SIDEWALKS SHALL BE 4" THICK, EXCEPT IN FRONT OF OVERHEAD DOORS SHALL BE 8" THICK MINIMUM. ALL SIDEWALKS SHALL BE PROVIDED W/ A 4" CRUSHED STONE BASE, AND CONTROL JOINTS SET EVERY 8FT O/C.

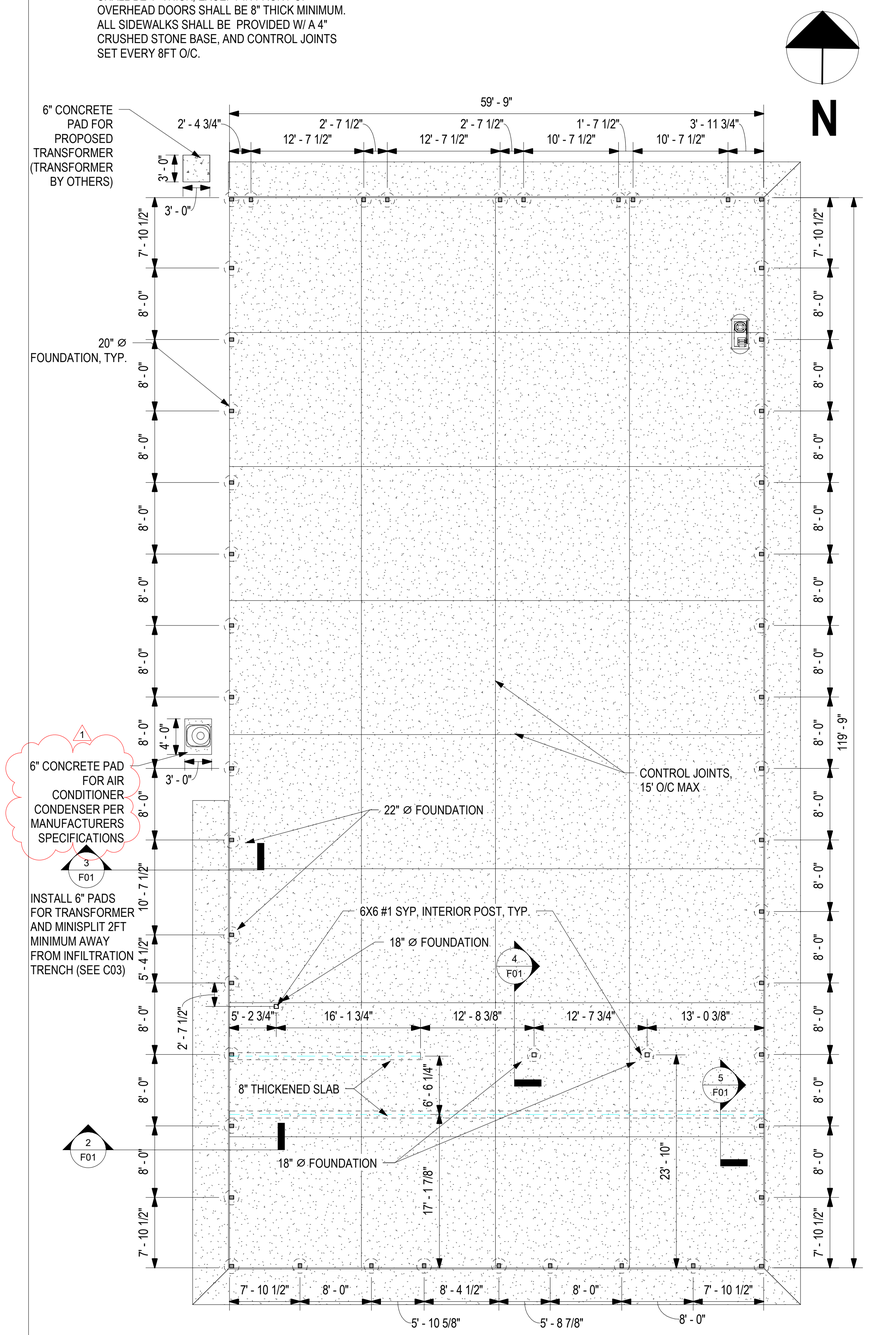

1 FOUNDATION PLAN
1/8" = 1'-0"

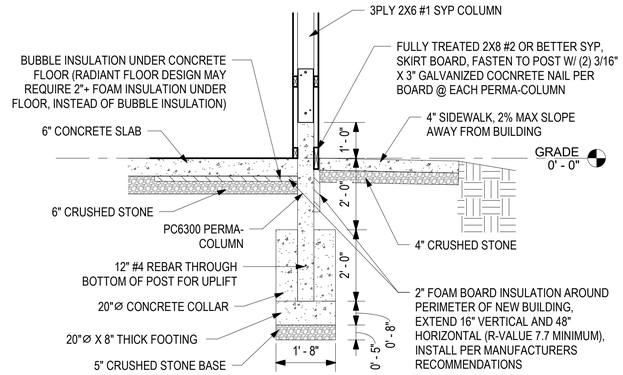

2 20" FOUNDATION DETAIL - TYPICAL
1/2" = 1'-0"

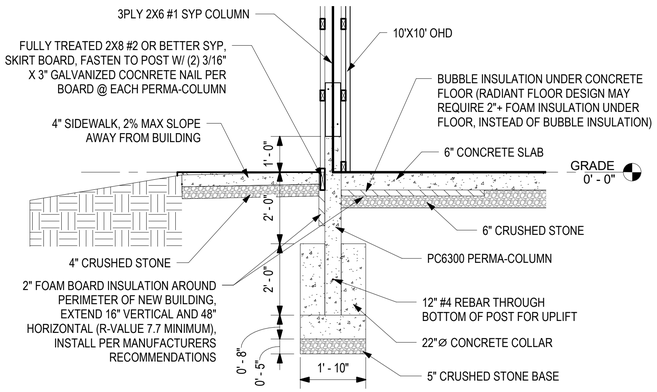

3 22" FOUNDATION DETAIL - SECTION VIEW
1/2" = 1'-0"

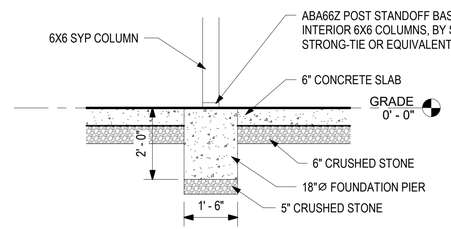

4 18" FOUNDATION DETAIL - SECTION VIEW
1/2" = 1'-0"

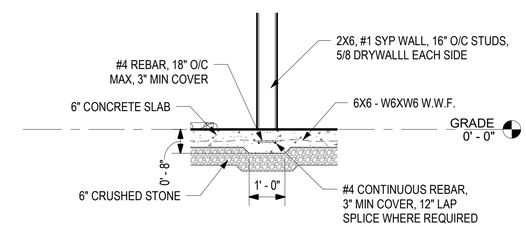

5 THICKENED SLAB - SECTION VIEW
1/2" = 1'-0"

*NOTE:
EVERY OTHER BAR SHALL EXTEND THROUGH CONTROL JOINTS. CUT ONE HALF OF HORIZONTAL STEEL AT THESE LOCATIONS

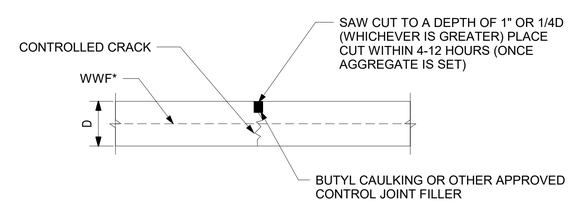

6 CONTROL JOINT DETAIL
1 1/2" = 1'-0"

MSS Engineering, LLC
ENGINEERING, CONSULTING, & DESIGN
414 W 5th St., Auburn, IN 46706
Phone: (260) 267-7414
Email: tamcdaniel@mssengineer.com
Travis A. McDaniel, PE

TRAVIS A. McDANIEL REGISTERED PE11800805 STATE OF INDIANA PROFESSIONAL ENGINEER

Travis A. McDaniel
05/26/23

PROJECT LOCATION:
560 S 900 E
MARION, IN 46953

PROJECT NAME: BID SPEC & DESIGN

DRAWING TITLE: FOUNDATION PLAN

REVISIONS:

NO.	DATE	DESCRIPTION	BY
1	5/18/23	UPDATE/CORRECT NOTATION	TAM

JOB NUMBER: 22.081.171

DRAWN BY: CAS

ENGINEERED BY: CAS

START DATE: 05/12/21

PROGRESS DATE: 7/13/21

CERTIFIED DATE: 05/26/23

SCALE: As indicated

PAGE NUMBER:

F01 OF F02 SHEETS

REV. 1

REV.

CONCRETE DESIGN NOTE:
(FULL CONCRETE NOTE CAN BE PROVIDED AS REQUESTED.)

1) SCOPE
ALL CONCRETE DESIGNS ARE THE INTERPRETATION OF MSS ENGINEERING, LLC. THE CONTRACTOR SHALL BE RESPONSIBLE FOR ENSURING THAT ALL DESIGNS MEET ALL APPLICABLE BUILDING CODES AND REGULATIONS. THE CONTRACTOR SHALL NOTIFY MSS ENGINEERING OF "SITE SPECIFIC" CODE REGULATIONS PRIOR TO ANY WORK BEING PERFORMED. ALL CONCRETE WORK SHALL CONFORM TO SPECIFICATIONS SET FORTH BY THE AMERICAN CONCRETE INSTITUTE (ACI).

2) CONCRETE MATERIALS & MIXTURE REQUIREMENTS
CONCRETE SHALL BE OF AIR ENTRAINED PORTLAND CEMENT WITH A MINIMUM COMPRESSIVE STRENGTH OF 3000 PSI IN 28 DAYS AND 3" TO 4" SLUMP. (UNLESS NOTED OTHERWISE)
A. CEMENTITIOUS MATERIALS:
CEMENT SHALL BE PORTLAND CEMENT CONFORMING TO ASTM C-150, TYPE I. ALL CEMENTITIOUS MATERIAL AND THE COMBINATION OF THESE MATERIALS SHALL BE INCLUDED IN CALCULATING THE W/CM OF THE CONCRETE MIXTURE.
B. AGGREGATES
THE AGGREGATE SHALL BE CRUSHED LIMESTONE OR A MSS ENG. APPROVED EQUIVALENT AND BE FREE OF CHEMICALS, COATINGS, OR OTHER MATERIALS WHICH AFFECT THE BONDING OF THE CEMENT PASTE. NORMAL-WEIGHT AGGREGATE SHALL CONFORM TO ASTM C33 WITH A MAXIMUM SIZE OF 1 1/4". LIGHT-WEIGHT AGGREGATE SHALL CONFORM TO ASTM C330
C. WATER
WATER SHALL BE CLEAN, POTABLE, AND FREE FROM ACIDS, ALKALIS, OR ORGANIC MATERIAL. MIXING WATER SHALL CONFORM TO ASTM C1602.
D. ADMIXTURES
AIR-ENTRAINMENT: ASTM C260
WATER REDUCTION AND SETTING TIME MODIFICATION: ASTM C494
PRODUCING FLOWING CONCRETE: ASTM C1017
INHIBITING CHLORIDE-INDUCED CORROSION: ASTM C1582
E. STEEL FIBER REINFORCEMENT
STEEL FIBER REINFORCEMENT USED FOR SHEAR RESISTANCE SHALL BE DEFORMED, CONFORM TO ASTM A820, AND HAVE A LENGTH-TO-DIAMETER RATIO OF AT LEAST 50 AND NOT EXCEEDING 100.
F. CONCRETE MIXTURE REQUIREMENTS (UNLESS NOTED OTHERWISE)
- MINIMUM COMPRESSIVE STRENGTH (F'/c): 3000 PSI
- TEST AGE FOR COMPRESSIVE STRENGTH: 28 DAYS
- MAXIMUM WATER /CEMENT RATIO (W/CM): 0.45
- MAXIMUM SIZE OF COURSE AGGREGATE LESS THAN LEAST OF (I), (II), (III):
(I) ONE-FIFTH THE NARROWEST DIMENSION BETWEEN SIDES OF FORMS
(II) ONE-THIRD THE DEPTH OF SLABS
(III) THREE-FOURTHS THE MINIMUM SPECIFIED CLEAR SPACING BETWEEN INDIVIDUAL REINFORCING BARS OR WIRES, BUNDLES OF BARS, PRESTRESSED REINFORCEMENT, INDIVIDUAL TENDONS, BUNDLED TENDONS, OR DUCTS

3) CONCRETE PRODUCTION & CONSTRUCTION
A. CONCRETE PLACEMENT & CONSOLIDATION:
- DEBRIS AND ICE SHALL BE REMOVED FROM SPACES TO BE OCCUPIED BY CONCRETE BEFORE PLACEMENT.
- STANDING WATER SHALL BE REMOVED FROM PLACE OF DEPOSIT BEFORE CONCRETE IS PLACED.
- MASONRY FILLER UNITS THAT WILL BE IN CONTACT WITH CONCRETE SHALL BE PREWETTED PRIOR TO PLACING CONCRETE.
- EQUIPMENT USED TO CONVEY CONCRETE FROM THE MIXER TO THE LOCATION OF FINAL PLACEMENT SHALL HAVE CAPABILITIES TO ACHIEVE THE PLACEMENT REQUIREMENTS.
- CONCRETE SHALL NOT BE PUMPED THROUGH PIPE MADE OF ALUMINUM OR ALUMINUM ALLOYS.
- CONCRETE SHALL BE PLACED IN ACCORDANCE WITH THE FOLLOWING:
· AT A RATE TO PROVIDE AN ADEQUATE SUPPLY OF CONCRETE AT THE LOCATION OF PLACEMENT.
· AT A RATE SO CONCRETE AT ALL TIMES HAS SUFFICIENT WORKABILITY SUCH THAT IT CAN BE CONSOLIDATED BY THE INTENDED METHODS.
· WITHOUT SEGREGATION OR LOSS OF MATERIALS.
· WITHOUT INTERRUPTIONS SUFFICIENT TO PERMIT LOSS OF WORKABILITY BETWEEN SUCCESSIVE PLACEMENTS THAT WOULD RESULT IN COLD JOINTS.
· DEPOSITED AS NEAR TO ITS FINAL LOCATION AS PRACTICABLE TO AVOID SEGREGATION DUE TO REHANDLING OR FLOWING.
- CONCRETE THAT HAS BEEN CONTAMINATED OR HAS LOST ITS INITIAL WORKABILITY TO THE EXTENT THAT IT CAN NO LONGER BE CONSOLIDATED BY THE INTENDED METHODS SHALL NOT BE USED.
- RETEMPERING CONCRETE IN ACCORDANCE WITH THE LIMITS OF ASTM C94 SHALL BE PERMITTED.
- AFTER STARTING, CONCRETING SHALL BE CARRIED ON AS A CONTINUOUS OPERATION UNTIL THE COMPLETION OF A PANEL OR SECTION, AS DEFINED BY ITS BOUNDARIES OR PREDETERMINED JOINTS.
- CONCRETE SHALL BE CONSOLIDATED BY SUITABLE MEANS DURING PLACEMENT AND SHALL BE WORKED AROUND REINFORCEMENT AND EMBEDMENTS AND INTO CORNERS OF FORMS.
- TOP SURFACES OF VERTICALLY FORMED LIFTS SHALL BE GENERALLY LEVEL.

B. CURING CONCRETE:
- CONCRETE, OTHER THAN HIGH-EARLY-STRENGTH, SHALL BE MAINTAINED AT A TEMPERATURE OF AT LEAST 50°F AND IN A MOIST CONDITION FOR AT LEAST THE FIRST 7 DAYS AFTER PLACEMENT, EXCEPT IF ACCELERATED CURING IS USED.
- HIGH-EARLY-STRENGTH CONCRETE SHALL BE MAINTAINED AT A TEMPERATURE OF AT LEAST 50°F AND IN A MOIST CONDITION FOR AT LEAST THE FIRST 3 DAYS AFTER PLACEMENT, EXCEPT IF ACCELERATED CURING IS USED.
- ACCELERATED CURING TO ACCELERATE STRENGTH GAIN AND REDUCE TIME OF CURING IS PERMITTED USING HIGH-PRESSURE STEAM, STEAM AT ATMOSPHERIC PRESSURE, HEAT AND MOISTURE. IF ACCELERATED CURING IS USED, THE FOLLOWING SHALL APPLY:
· COMPRESSIVE STRENGTH AT THE LOAD STAGE CONSIDERED SHALL BE AT LEAST THE STRENGTH REQUIRED AT THAT LOAD STAGE.
· ACCELERATED CURING SHALL NOT IMPAIR THE DURABILITY OF THE CONCRETE.
- PROCEDURES FOR PROTECTING AND CURING CONCRETE SHALL BE CONSIDERED ADEQUATE IF (I) OR (II) ARE SATISFIED:
(I) AVERAGE STRENGTH OF FIELD-CURED CYLINDERS AT TEST AGE DESIGNATED FOR DETERMINATION OF F'/c IS EQUAL TO OR AT LEAST 85 PERCENT OF THAT OF COMPANION STANDARD-CURED CYLINDERS.
(II) AVERAGE STRENGTH OF FIELD-CURED CYLINDERS AT TEST AGE EXCEEDS F'/c BY MORE THAN 500 PSI.
C. CONCRETING IN COLD WEATHER:
- ADEQUATE EQUIPMENT SHALL BE PROVIDED FOR HEATING CONCRETE MATERIALS AND PROTECTING CONCRETE DURING FREEZING OR NEAR-FREEZING WEATHER.
- FROZEN MATERIALS OR MATERIALS CONTAINING ICE SHALL NOT BE USED.
- FORMS, FILLERS, AND GROUND WITH WHICH CONCRETE IS TO COME IN CONTACT SHALL BE FREE FROM FROST AND ICE.
- CONCRETE MATERIALS AND PRODUCTION METHODS SHALL BE SELECTED SO THAT THE CONCRETE TEMPERATURE AT DELIVERY COMPLIES WITH THE SPECIFIED TEMPERATURE LIMITS.
D. CONCRETING IN HOT WEATHER:
- CONCRETE MATERIALS AND PRODUCTION METHODS SHALL BE SELECTED SO THAT THE CONCRETE TEMPERATURE AT DELIVERY COMPLIES WITH THE SPECIFIED TEMPERATURE LIMITS.
- HANDLING, PLACING, PROTECTION, AND CURING PROCEDURES SHALL LIMIT CONCRETE TEMPERATURES OR WATER EVAPORATION THAT COULD REDUCE STRENGTH, SERVICEABILITY, AND DURABILITY OF THE MEMBER OR STRUCTURE.
E. CONSTRUCTION, CONTRACTION, & ISOLATION JOINTS:
- JOINT LOCATIONS OR JOINT DETAILS NOT SHOWN OR THAT DIFFER FROM THOSE INDICATED IN CONSTRUCTION DOCUMENTS SHALL BE SUBMITTED FOR REVIEW BY THE LICENSED DESIGN PROFESSIONAL.
- EXCEPT FOR PRESTRESSED CONCRETE, CONSTRUCTION JOINTS IN FLOOR AND ROOF SYSTEMS SHALL BE LOCATED WITHIN THE MIDDLE THIRD OF SPANS OF SLABS, BEAMS, AND GIRDERS.
- CONSTRUCTION JOINTS IN GIRDERS SHALL BE OFFSET A DISTANCE OF AT LEAST TWO TIMES THE WIDTH OF INTERSECTING BEAMS, MEASURED FROM THE FACE OF THE INTERSECTING BEAM.
- CONSTRUCTION JOINTS SHALL BE CLEANED AND LAITANCE REMOVED BEFORE NEW CONCRETE IS PLACED.
- SURFACE OF CONCRETE CONSTRUCTION JOINTS SHALL BE INTENTIONALLY ROUGHENED.
- IMMEDIATELY BEFORE NEW CONCRETE IS PLACED, CONSTRUCTION JOINTS SHALL BE PREWETTED AND STANDING WATER REMOVED.

4) REINFORCEMENT MATERIALS & CONSTRUCTION REQUIREMENTS
ALL REINFORCING STEEL SHALL BE NEW BILLET STEEL CONFORMING TO ASTM A615 GRADE 60, UNLESS INDICATED OTHERWISE ON THE DRAWING. ALL REINFORCING STEEL SHALL BE DEFORMED REINFORCEMENT. WELDED WIRE FABRIC SHALL BE ELECTRICALLY WELDED COLD-DRAWN WIRE OF GAUGE AND MESH SIZE SHOWN ON THE DRAWING, AND SHALL CONFORM TO ASTM A185, DEFORMED TYPE.
A. GENERAL:
- MILL TEST REPORTS FOR REINFORCEMENT SHALL BE SUBMITTED.
- NONPRESTRESSED REINFORCEMENT WITH RUST, MILL SCALE, OR A COMBINATION OF BOTH SHALL BE CONSIDERED SATISFACTORY, PROVIDED A HAND-WIRE-BRUSHED REPRESENTATIVE TEST SPECIMEN OF THE REINFORCEMENT COMPLIES WITH THE APPLI CABLE ASTM SPECIFICATION FOR THE MINIMUM DIMENSIONS (INCLUDING HEIGHT OF DEFORMATIONS) AND WEIGHT PER UNIT LENGTH.
- PRESTRESSING REINFORCEMENT SHALL BE FREE OF MILL SCALE, PITTING, AND EXCESSIVE RUST. A LIGHT COATING OF RUST SHALL BE PERMITTED.
- AT THE TIME CONCRETE IS PLACED, REINFORCEMENT TO BE BONDED SHALL BE CLEAN OF ICE, MUD, OIL, OR OTHER DELETERIOUS COATINGS THAT DECREASE BOND.

5) ANCHORING TO CONCRETE
POST-INSTALLED ANCHORS SHALL BE INSTALLED IN ACCORDANCE WITH THE MANUFACTURER'S INSTRUCTIONS. POST-INSTALLED ADHESIVE ANCHORS SHALL BE INSTALLED IN ACCORDANCE WITH THE MANUFACTURER'S PRINTED INSTALLATION INSTRUCTIONS (MPII)

6) FORMWORK
A. DESIGN OF FORMWORK:
- DESIGN OF FORMWORK SHALL CONSIDER (I) THROUGH (V):
(I) METHOD OF CONCRETE PLACEMENT.
(II) RATE OF CONCRETE PLACEMENT.
(III) CONSTRUCTION LOADS, INCLUDING VERTICAL, HORIZONTAL, AND IMPACT.
(IV) AVOIDANCE OF DAMAGE TO PREVIOUSLY CONSTRUCTED MEMBERS.
(V) FOR POST-TENSIONED MEMBERS, ALLOWANCE FOR MOVEMENT OF THE MEMBER DURING APPLICATION OF THE PRESTRESSING FORCE WITHOUT DAMAGE TO THE MEMBER.
- FORMWORK FABRICATION AND INSTALLATION SHALL RESULT IN A FINAL STRUCTURE THAT CONFORMS TO SHAPES, LINES, AND DIMENSIONS OF THE MEMBERS AS REQUIRED BY THE CONSTRUCTION DOCUMENTS.
- FORMWORK SHALL BE SUFFICIENTLY TIGHT TO INHIBIT LEAKAGE OF PASTE OR MORTAR.
- FORMWORK SHALL BE BRACED OR TIED TOGETHER TO MAINTAIN POSITION AND SHAPE.

B. REMOVAL OF FORMWORK:
- BEFORE STARTING CONSTRUCTION, THE CONTRACTOR SHALL DEVELOP A PROCEDURE AND SCHEDULE FOR REMOVAL OF FORMWORK AND INSTALLATION OF RESHORES, AND SHALL CALCULATE THE LOADS TRANSFERRED TO THE STRUCTURE DURING THIS PROCESS.
- STRUCTURAL ANALYSIS AND CONCRETE STRENGTH REQUIREMENTS USED IN PLANNING AND IMPLEMENTING THE FORMWORK REMOVAL AND RESHORE INSTALLATION SHALL BE FURNISHED BY THE CONTRACTOR TO THE LICENSED DESIGN PROFESSIONAL AND TO THE BUILDING OFFICIAL, WHEN REQUESTED.
- NO CONSTRUCTION LOADS SHALL BE PLACED ON, NOR ANY FORMWORK REMOVED FROM, ANY PART OF THE STRUCTURE UNDER CONSTRUCTION EXCEPT WHEN THAT PORTION OF THE STRUCTURE IN COMBINATION WITH REMAINING FORMWORK HAS SUFFICIENT STRENGTH TO SUPPORT SAFELY ITS WEIGHT AND LOADS PLACED THEREON AND WITHOUT IMPAIRING SERVICEABILITY.
- SUFFICIENT STRENGTH SHALL BE DEMONSTRATED BY STRUCTURAL ANALYSIS CONSIDERING ANTICIPATED LOADS, STRENGTH OF FORMWORK, AND AN ESTIMATE OF IN-PLACE CONCRETE STRENGTH.
- THE ESTIMATE OF IN-PLACE CONCRETE STRENGTH SHALL BE BASED ON TESTS OF FIELD-CURED CYLINDERS OR ON OTHER PROCEDURES TO EVALUATE CONCRETE STRENGTH APPROVED BY THE LICENSED DESIGN PROFESSIONAL AND, WHEN REQUESTED, APPROVED BY THE BUILDING OFFICIAL.
- FORMWORK SHALL BE REMOVED IN SUCH A MANNER NOT TO IMPAIR SAFETY AND SERVICEABILITY OF THE STRUCTURE.
- CONCRETE EXPOSED BY FORMWORK REMOVAL SHALL HAVE SUFFICIENT STRENGTH NOT TO BE DAMAGED BY THE REMOVAL.
- FORMWORK SUPPORTS FOR POST-TENSIONED MEMBERS SHALL NOT BE REMOVED UNTIL SUFFICIENT POST-TENSIONING HAS BEEN APPLIED TO ENABLE POST-TENSIONED MEMBERS TO SUPPORT THEIR DEAD LOAD AND ANTICIPATED CONSTRUCTION LOADS.
- NO CONSTRUCTION LOADS EXCEEDING THE COMBINATION OF SUPERIMPOSED DEAD LOAD PLUS LIVE LOAD INCLUDING REDUCTION SHALL BE PLACED ON ANY UNSHORED PORTION OF THE STRUCTURE UNDER CONSTRUCTION, UNLESS ANALYSIS INDICATES ADEQUATE STRENGTH TO SUPPORT SUCH ADDITIONAL LOADS AND WITHOUT IMPAIRING SERVICEABILITY.

7) CONCRETE EVALUATION & ACCEPTANCE
A. GENERAL:
- A STRENGTH TEST SHALL BE THE AVERAGE OF THE STRENGTHS OF AT LEAST TWO 6 X 12 IN. CYLINDERS OR AT LEAST THREE 4 X 8 IN. CYLINDERS MADE FROM THE SAME SAMPLE OF CONCRETE AND TESTED AT 28 DAYS OR AT TEST AGE DESIGNATED FOR FC'.
- THE TESTING AGENCY PERFORMING ACCEPTANCE TESTING SHALL COMPLY WITH ASTM C1077.
- QUALIFIED FIELD TESTING TECHNICIANS SHALL PERFORM TESTS ON FRESH CONCRETE AT THE JOB SITE, PREPARE SPECIMENS FOR STANDARD CURING, PREPARE SPECIMENS FOR FIELD CURING, IF REQUIRED, AND RECORD THE TEMPERATURE OF THE FRESH CONCRETE WHEN PREPARING SPECIMENS FOR STRENGTH TESTS.
- QUALIFIED LABORATORY TECHNICIANS SHALL PERFORM REQUIRED LABORATORY TESTS.
- ALL REPORTS OF ACCEPTANCE TESTS SHALL BE PROVIDED TO THE LICENSED DESIGN PROFESSIONAL, CONTRACTOR, CONCRETE PRODUCER, AND, IF REQUESTED, TO THE OWNER AND THE CODE OFFICIAL.

B. FREQUENCT OF TESTING:
- SAMPLES FOR PREPARING STRENGTH TEST SPECIMENS OF EACH CONCRETE MIXTURE PLACED EACH DAY SHALL BE TAKEN IN ACCORDANCE WITH (I) THROUGH (III):
(I) AT LEAST ONCE A DAY.
(II) AT LEAST ONCE FOR EACH 150 YD3 OF CONCRETE.
(III) AT LEAST ONCE FOR EACH 5000 FT2 OF SURFACE AREA FOR SLABS OR WALLS.
- ON A GIVEN PROJECT, IF TOTAL VOLUME OF CONCRETE IS SUCH THAT FREQUENCY OF TESTING WOULD PROVIDE FEWER THAN FIVE STRENGTH TESTS FOR A GIVEN CONCRETE MIXTURE, STRENGTH TEST SPECIMENS SHALL BE MADE FROM AT LEAST FIVE RANDOMLY SELECTED BATCHES OR FROM EACH BATCH IF FEWER THAN FIVE BATCHES ARE USED.
- IF THE TOTAL QUANTITY OF A GIVEN CONCRETE MIXTURE IS LESS THAN 50 YD3, STRENGTH TESTS ARE NOT REQUIRED IF EVIDENCE OF SATISFACTORY STRENGTH IS SUBMITTED TO AND APPROVED BY THE CODE OFFICIAL.

C. ACCEPTANCE CRITERIA FOR STANDARD-CURED SPECIMENS:
- SPECIMENS FOR ACCEPTANCE TESTS SHALL BE IN ACCORDANCE WITH (I) AND (II):
(I) SAMPLING OF CONCRETE FOR STRENGTH TEST SPECIMENS SHALL BE IN ACCORDANCE WITH ASTM C172.
(II) CYLINDERS FOR STRENGTH TESTS SHALL BE MADE AND STANDARD-CURED IN ACCORDANCE WITH ASTM C31 AND TESTED IN ACCORDANCE WITH ASTM C39.
- STRENGTH LEVEL OF A CONCRETE MIXTURE SHALL BE ACCEPTABLE IF (I) AND (II) ARE SATISFIED:
(I) EVERY ARITHMETIC AVERAGE OF ANY THREE CONSECUTIVE STRENGTH TESTS EQUALS OR EXCEEDS F/c'.
(II) NO STRENGTH TEST FALLS BELOW F/c' BY MORE THAN 500 PSI IF F/c' IS 5000 PSI OR LESS; OR BY MORE THAN 0.10F/c' IF F/c' EXCEEDS 5000 PSI.
- IF EITHER OF THE REQUIREMENTS ARE NOT SATISFIED, STEPS SHALL BE TAKEN TO INCREASE THE AVERAGE OF SUBSEQUENT STRENGTH RESULTS
- REQUIREMENTS FOR INVESTIGATING LOW STRENGTH-TEST RESULTS SHALL APPLY IF THE REQUIREMENTS OF (II) ARE NOT MET

8) INSPECTION
A. GENERAL:
- CONCRETE CONSTRUCTION SHALL BE INSPECTED AS REQUIRED BY THE GENERAL BUILDING CODE.
- IN THE ABSENCE OF GENERAL BUILDING CODE INSPECTION REQUIREMENTS, CONCRETE CONSTRUCTION SHALL BE INSPECTED THROUGHOUT THE VARIOUS WORK STAGES BY OR UNDER THE SUPERVISION OF A LICENSED DESIGN PROFESSIONAL OR BY A QUALIFIED INSPECTOR IN ACCORDANCE WITH THE PROVISIONS OF THIS SECTION.
- THE LICENSED DESIGN PROFESSIONAL, A PERSON UNDER THE SUPERVISION OF A LICENSED DESIGN PROFESSIONAL, OR A QUALIFIED INSPECTOR SHALL VERIFY COMPLIANCE WITH CONSTRUCTION DOCUMENTS.
- FOR CONTINUOUS CONSTRUCTION INSPECTION OF SPECIAL MOMENT FRAMES, QUALIFIED INSPECTORS UNDER THE SUPERVISION OF THE LICENSED DESIGN PROFESSIONAL RESPONSIBLE FOR THE STRUCTURAL DESIGN OR UNDER THE SUPERVISION OF A LICENSED DESIGN PROFESSIONAL WITH DEMONSTRATED CAPABILITY TO SUPERVISE INSPECTION OF THESE ELEMENTS SHALL INSPECT PLACEMENT OF REINFORCEMENT AND CONCRETE.
B. INSPECTION REPORTS:
- INSPECTION REPORTS SHALL DOCUMENT INSPECTED ITEMS AND BE DEVELOPED THROUGHOUT EACH CONSTRUCTION WORK STAGE BY THE LICENSED DESIGN PROFESSIONAL, PERSON UNDER THE SUPERVISION OF A LICENSED DESIGN PROFESSIONAL, OR QUALIFIED INSPECTOR. RECORDS OF THE INSPECTION SHALL BE PRESERVED BY THE PARTY PERFORMING THE INSPECTION FOR AT LEAST 2 YEARS AFTER COMPLETION OF THE PROJECT.
- INSPECTION REPORTS SHALL DOCUMENT (I) THROUGH (IV):
(I) GENERAL PROGRESS OF THE WORK.
(II) ANY SIGNIFICANT CONSTRUCTION LOADINGS ON COMPLETED FLOORS, MEMBERS, OR WALLS.
(III) THE DATE AND TIME OF MIXING, QUANTITY, PROPORTIONS OF MATERIALS USED, APPROXIMATE PLACEMENT LOCATION IN THE STRUCTURE, AND RESULTS OF TESTS FOR FRESH AND HARDENED CONCRETE PROPERTIES FOR ALL CONCRETE MIXTURES USED IN THE WORK.
(IV) CONCRETE TEMPERATURES AND PROTECTION GIVEN TO CONCRETE DURING PLACEMENT AND CURING WHEN THE AMBIENT TEMPERATURE FALLS BELOW 40°F OR RISES ABOVE 95°F.
- TEST REPORTS SHALL BE REVIEWED TO VERIFY COMPLIANCE IF ASTM A615 DEFORMED REINFORCEMENT IS USED TO RESIST EARTHQUAKE-INDUCED FLEXURE, AXIAL FORCES, OR BOTH IN SPECIAL MOMENT FRAMES, SPECIAL STRUCTURAL WALLS, AND COMPONENTS OF SPECIAL STRUCTURAL WALLS INCLUDING COUPLING BEAMS AND WALL PIERS.
C. ITEMS REQUIRING INSPECTION:
UNLESS OTHERWISE SPECIFIED, ITEMS REQUIRING VERIFICATION AND INSPECTION SHALL BE CONTINUOUSLY OR PERIODICALLY INSPECTED IN ACCORDANCE WITH THE FOLLOWING REQUIREMENTS:
- ITEMS REQUIRING CONTINUOUS INSPECTION SHALL INCLUDE (I) THROUGH (IV):
(I) PLACEMENT OF CONCRETE.
(II) TENSIONING OF PRESTRESSING STEEL AND GROUTING OF BONDED TENDONS.
(III) INSTALLATION OF ADHESIVE ANCHORS IN HORIZONTAL OR UPWARDLY INCLINED ORIENTATIONS TO RESIST SUSTAINED TENSION LOADS IN ACCORDANCE WITH 17.8.2.4 AND WHERE REQUIRED AS A CONDITION OF THE ANCHOR ASSESSMENT IN ACCORDANCE WITH ACI 355.4.
(IV) REINFORCEMENT FOR SPECIAL MOMENT FRAMES.
- ITEMS REQUIRING PERIODIC INSPECTION SHALL INCLUDE (I) THROUGH (VII):
(I) PLACEMENT OF REINFORCEMENT, EMBEDMENTS, AND POST-TENSIONING TENDONS.
(II) CURING METHOD AND DURATION OF CURING FOR EACH MEMBER.
(III) CONSTRUCTION AND REMOVAL OF FORMS AND RESHORING.
(IV) SEQUENCE OF ERECTION AND CONNECTION OF PRECAST MEMBERS.
(V) VERIFICATION OF IN-PLACE CONCRETE STRENGTH BEFORE STRESSING POST-TENSIONED REINFORCEMENT AND BEFORE REMOVAL OF SHORES AND FORMWORK FROM BEAMS AND STRUCTURAL SLABS.
(VI) INSTALLATION OF CAST-IN ANCHORS, EXPANSION ANCHORS, AND UNDERCUT ANCHORS IN ACCORDANCE WITH ACI 17.8.2.
(VII) INSTALLATION OF ADHESIVE ANCHORS WHERE CONTINUOUS INSPECTION IS NOT REQUIRED IN ACCORDANCE WITH ACI 17.8.2.4 OR AS A CONDITION OF THE ASSESSMENT IN ACCORDANCE WITH ACI 355.4.

MSS Engineering, LLC
ENGINEERING, CONSULTING, & DESIGN
414 W 5th St., Auburn, IN 46706
Phone: (260) 267-7414
Email: tamcdaniel@mssengineer.com
Travis A. McDaniel, PE

TRAVIS A. McDANIEL
REGISTERED
PE11800805
STATE OF INDIANA
PROFESSIONAL ENGINEER

Travis A. McDaniel
05/26/23

PROJECT LOCATION:
560 S 900 E
MARION, IN 46953

PROJECT NAME:
BID SPEC & DESIGN

DRAWING TITLE:
CONCRETE NOTES

REVISIONS:

NO.	DATE	DESCRIPTION	BY

JOB NUMBER: 22.081.171

DRAWN BY: CAS

ENGINEERED BY: CAS

START DATE: 05/12/21

PROGRESS DATE: 7/13/21

CERTIFIED DATE: 05/26/23

SCALE:

PAGE NUMBER:

F02 OF F02 SHEETS

REV.

REV. 2

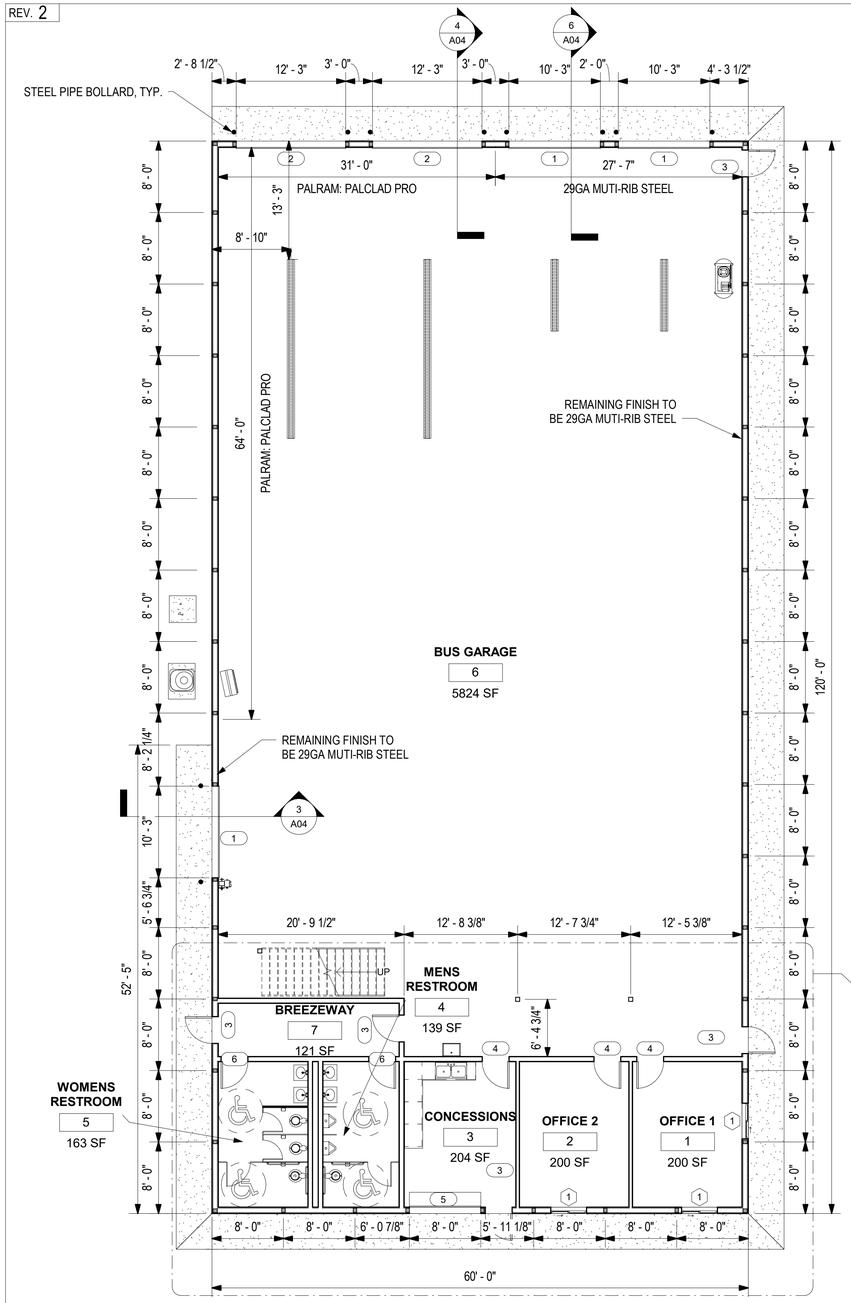

1 FLOOR PLAN - MAIN FLOOR
1/8" = 1'-0"

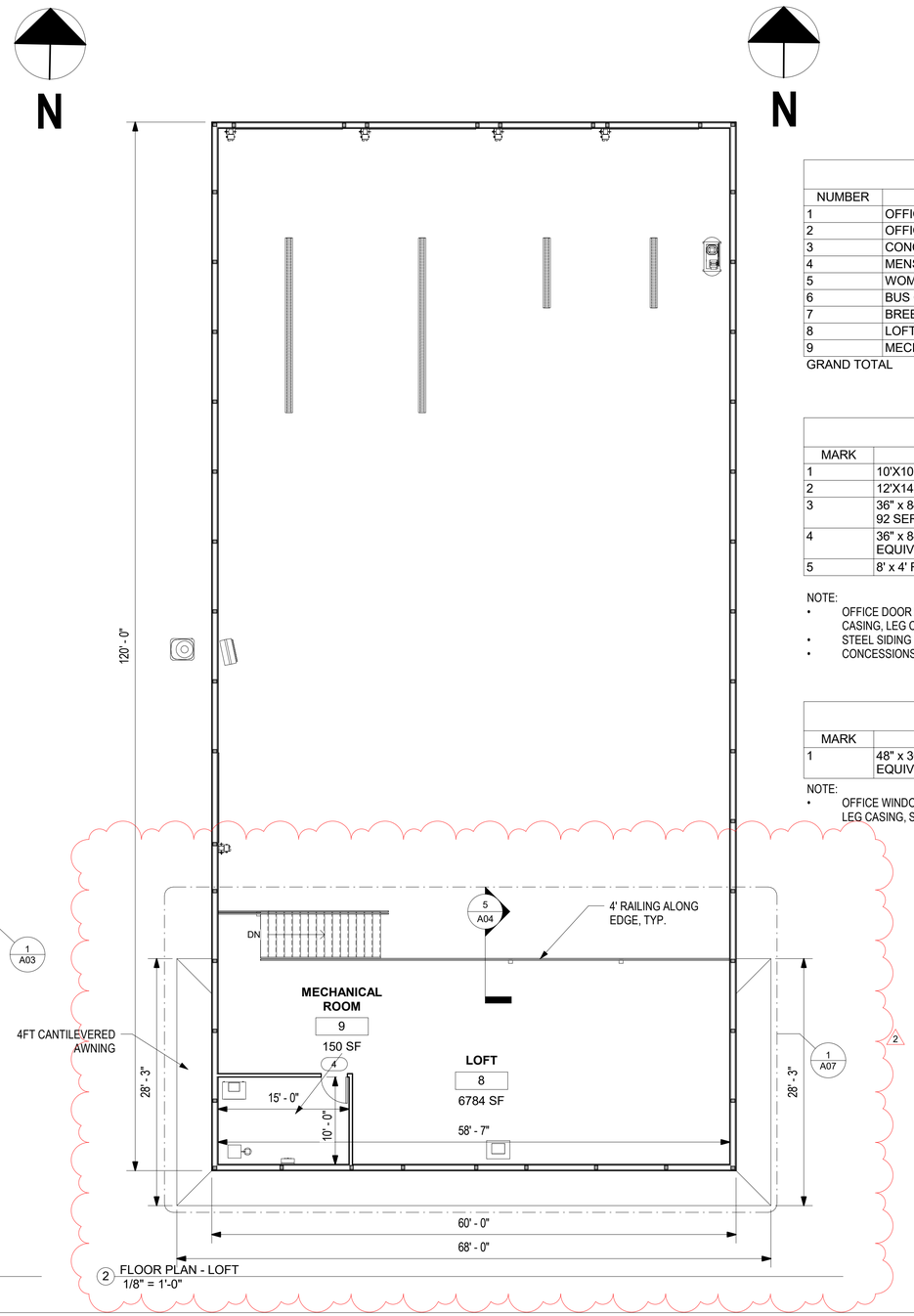

2 FLOOR PLAN - LOFT
1/8" = 1'-0"

ROOM SCHEDULE				
NUMBER	NAME	AREA	LOAD FACTOR	OCCUPANT LOAD
1	OFFICE 1	200 SF	100 SF	3
2	OFFICE 2	200 SF	100 SF	3
3	CONCESSIONS	204 SF	200 SF	2
4	MENS RESTROOM	139 SF	45 SF	4
5	WOMENS RESTROOM	163 SF	45 SF	4
6	BUS GARAGE	5824 SF	300 SF	20
7	BREEZEWAY	121 SF	0 SF	
8	LOFT	6784 SF	300 SF	23
9	MECHANICAL ROOM	150 SF	300 SF	1
GRAND TOTAL		13783 SF		59

DOOR SCHEDULE		
MARK	TYPE	COUNT
1	10'X10' OHD, CLOPAY MODEL 3720	3
2	12'X14' OHD, CLOPAY MODEL 3720	2
3	36" x 84" EXTERIOR INSULATED COMMERCIAL DOOR (PLYCO 92 SERIES OR EQUIVALENT)	5
4	36" x 84" INTERIOR COMMERCIAL DOOR (PLYCO 92 SERIES OR EQUIVALENT)	6
5	8' x 4' ROLL UP CONCESSION DOOR, CLOPAY MODEL 150C	1

NOTE:
- OFFICE DOOR INTERIORS TO BE TRIMMED W/ VINYL NO MITERED TRIM (HEAD CASING, LEG CASING)
- STEEL SIDING TRIMOUT PER MANUFACTURERS RECOMMENDATIONS
- CONCESSIONS DOOR TO BE FLASHED ON RETURNS

WINDOW SCHEDULE		
MARK	TYPE	COUNT
1	48" x 36" INSULATED VIYNL SLIDER W/ SCREEN (PLYCO CTB OR EQUIVALENT)	3

NOTE:
- OFFICE WINDOWS TO BE TRIMMED W/ VINYL NO MITERED TRIM (HEAD CASING, LEG CASING, STOOL/HORN, APRON)

FINISH SCHEDULE

NUMBER	NAME	FLOOR FINISH	BASE FINISH	WALL FINISH NORTH	SOUTH	EAST	WEST	CEILING FINISH
1	OFFICE 1	VINYL PLANK FLOORING	4" PVC VINYL WALL BASE MOLDING	5/8" DRYWALL	5/8" DRYWALL	5/8" DRYWALL	5/8" DRYWALL	5/8" DRYWALL
2	OFFICE 2	VINYL PLANK FLOORING	4" PVC VINYL WALL BASE MOLDING	5/8" DRYWALL	5/8" DRYWALL	5/8" DRYWALL	5/8" DRYWALL	5/8" DRYWALL
3	CONCESSIONS	CONCRETE - UNFINISHED	4" PVC VINYL WALL BASE MOLDING	5/8" DRYWALL	5/8" DRYWALL	5/8" DRYWALL	5/8" DRYWALL	5/8" DRYWALL
4	MENS RESTROOM	CONCRETE - UNFINISHED	4" PVC VINYL WALL BASE MOLDING	*PALRAM: PALCLAD PRO	*PALRAM: PALCLAD PRO	*PALRAM: PALCLAD PRO	*PALRAM: PALCLAD PRO	*PALRAM: PALCLAD PRO
5	WOMENS RESTROOM	CONCRETE - UNFINISHED	4" PVC VINYL WALL BASE MOLDING	*PALRAM: PALCLAD PRO	*PALRAM: PALCLAD PRO	*PALRAM: PALCLAD PRO	*PALRAM: PALCLAD PRO	*PALRAM: PALCLAD PRO
6	BUS GARAGE	CONCRETE - UNFINISHED	TRIM PER MANUFACTURER RECOMMENDATIONS	NW HALF TO BE *PALRAM: PALCLAD PRO; NE TO 29GA MULTI-RIB	29GA MULTI-RIB	29GA MULTI-RIB	*PALRAM: PALCLAD PRO	29GA MULTI-RIB
7	BREEZEWAY	CONCRETE - UNFINISHED	4" PVC VINYL WALL BASE MOLDING	*PALRAM: PALCLAD PRO	*PALRAM: PALCLAD PRO	*PALRAM: PALCLAD PRO	*PALRAM: PALCLAD PRO	*PALRAM: PALCLAD PRO
8	LOFT	3/4" T&G DECKING - UNFINISHED	-	-	29GA MULTI-RIB	29GA MULTI-RIB	29GA MULTI-RIB	29GA MULTI-RIB
9	MECHANICAL ROOM	3/4" T&G DECKING - UNFINISHED	-	5/8" TYPE-X DRYWALL	5/8" TYPE-X DRYWALL	5/8" TYPE-X DRYWALL	5/8" TYPE-X DRYWALL	5/8" TYPE-X DRYWALL

1 *NOTE: PALRAM PALCLAD PRO SHOULD BE ADHERED TO 5/8" PLYWOOD OR DRYWALL. SELECT ADHESIVE PER MANUFACTURERS RECOMMENDATIONS.

MSS Engineering, LLC
ENGINEERING, CONSULTING, & DESIGN
414 W 5th St., Auburn, IN 46706
Phone: (260) 267-7414
Email: tamcdaniel@mssengineer.com
Travis A. McDaniel, PE

TRAVIS A. McDANIEL REGISTERED PE11800805 STATE OF INDIANA PROFESSIONAL ENGINEER
Travis A. McDaniel
05/26/23

PROJECT LOCATION:
560 S 900 E
MARION, IN 46953

PROJECT NAME: BID SPEC & DESIGN

DRAWING TITLE: FLOOR PLAN

REVISIONS:

NO.	DATE	DESCRIPTION	BY
1	5/18/23	UPDATE/CORRECT NOTATION	TAM
2	5/26/23	ADD TO AWNING LENGTH	TAM

JOB NUMBER: 22.081.171

DRAWN BY: CAS
ENGINEERED BY: CAS

START DATE: 05/12/21
PROGRESS DATE: 7/13/21
CERTIFIED DATE: 05/26/23
SCALE: 1/8" = 1'-0"
PAGE NUMBER:

REV.

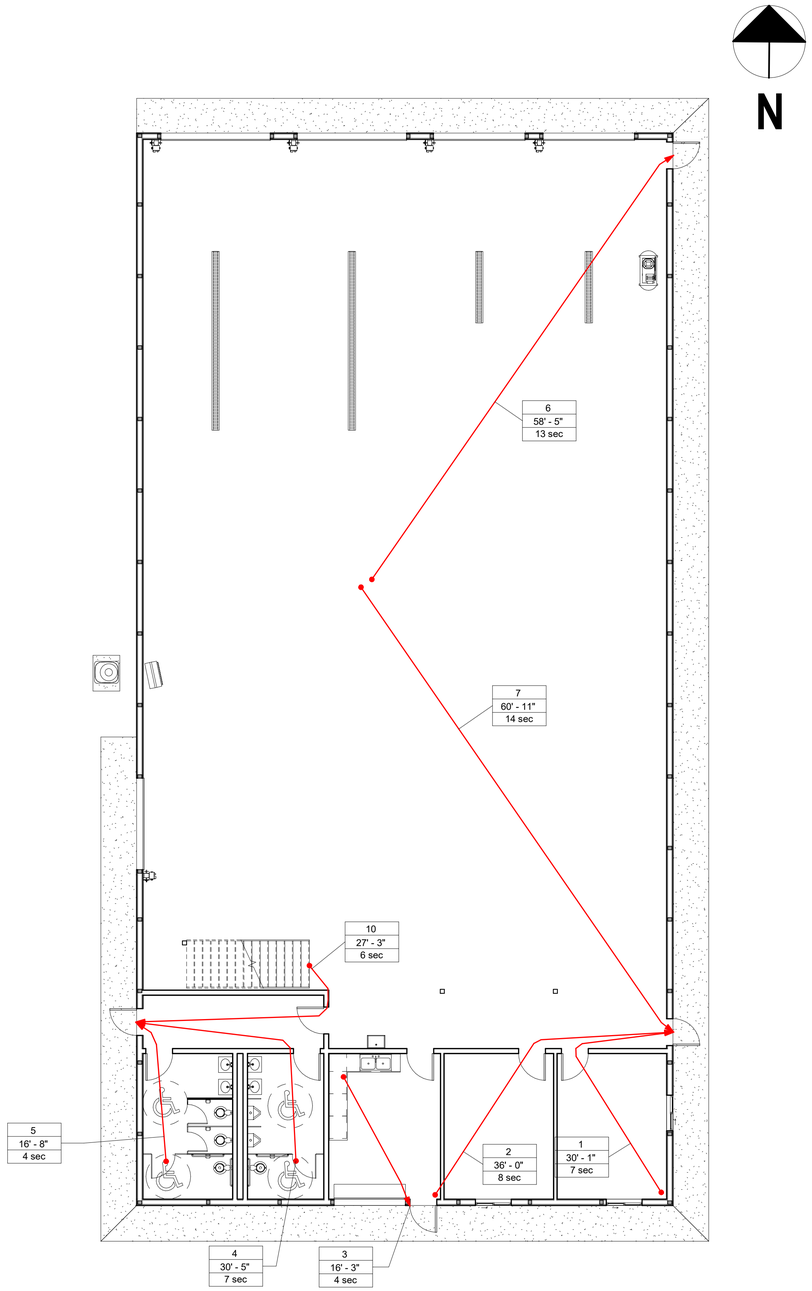

1 FIRE & LIFE SAFETY - MAIN FLOOR
1/8" = 1'-0"

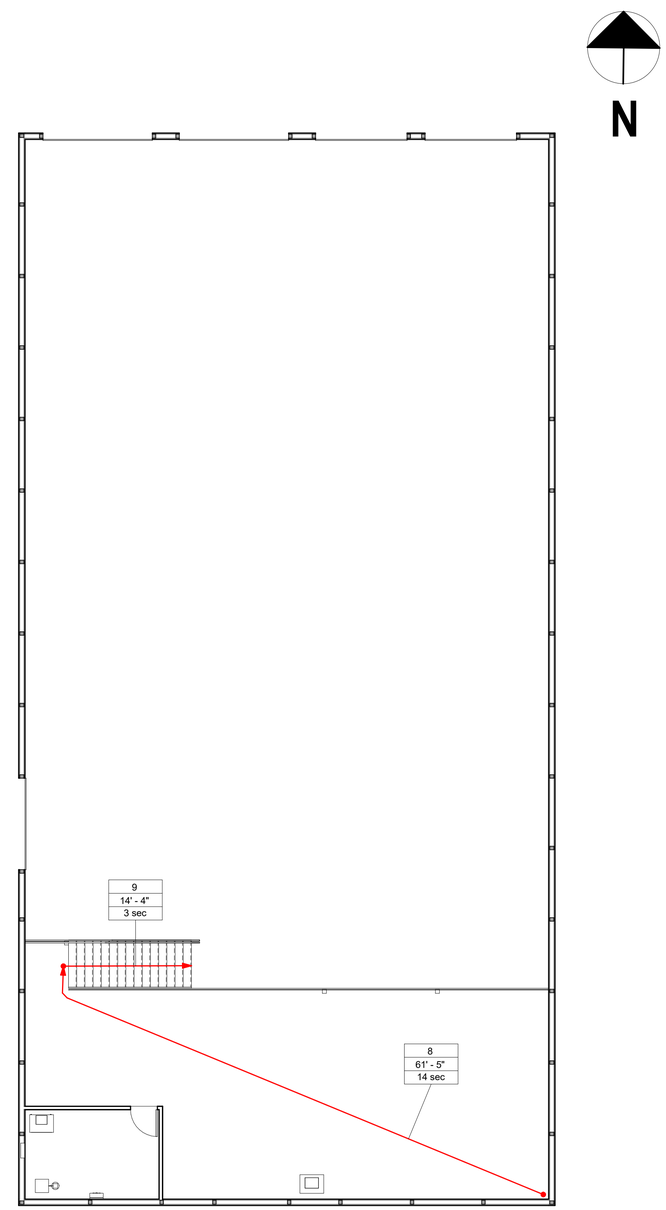

2 FIRE & LIFE SAFETY - LOFT
1/8" = 1'-0"

PATH OF TRAVEL SCHEDULE			
MARK	LENGTH	SPEED	TIME
1	30' - 0 19/32"	3.0 mph	6.8 s
2	36' - 0 1/32"	3.0 mph	8.2 s
3	16' - 3 7/16"	3.0 mph	3.7 s
4	30' - 5 3/32"	3.0 mph	6.9 s
5	16' - 7 1/2"	3.0 mph	3.8 s
6	58' - 4 17/32"	3.0 mph	13.3 s
7	60' - 11 1/8"	3.0 mph	13.8 s
8	61' - 4 13/16"	3.0 mph	14.0 s
9	14' - 4"	3.0 mph	3.3 s
10	27' - 2 27/32"	3.0 mph	6.2 s

MSS Engineering, LLC
ENGINEERING, CONSULTING, & DESIGN
414 W 5th St., Auburn, IN 46706
Phone: (260) 267-7414
Email: tamcdaniel@mssengineer.com
Travis A. McDaniel, PE

TRAVIS A. McDANIEL
REGISTERED
PE11800805
STATE OF INDIANA
PROFESSIONAL ENGINEER

Travis A. McDaniel
05/26/23

PROJECT LOCATION:
560 S 900 E
MARION, IN 46953

PROJECT NAME:
BID SPEC & DESIGN

DRAWING TITLE:
FIRE & LIFE SAFETY PLAN

REVISIONS:

NO.	DATE	DESCRIPTION	BY

JOB NUMBER: 22.081.171

DRAWN BY: CAS

ENGINEERED BY: CAS

START DATE: 05/12/21

PROGRESS DATE: 7/13/21

CERTIFIED DATE: 05/26/23

SCALE: 1/8" = 1'-0"

PAGE NUMBER:

A02 OF A09 SHEETS

REV.

REV.

CASEWORK SCHEDULE						
TAG	DESCRIPTION	HEIGHT	WIDTH	DEPTH	COUNT	FINISH
A	Base Cabinet-Double Door & 2 Drawer	2' - 10 1/2"	2' - 6"	2' - 0"	3	Painted Cabinets w/ Laminate Doors and Door Fronts
B	Base Cabinet-Single Door & Drawer	2' - 10 1/2"	1' - 6"	2' - 0"	1	Painted Cabinets w/ Laminate Doors and Door Fronts
C	Base Cabinet-Single Door & Drawer	2' - 10 1/2"	1' - 0"	2' - 0"	1	Painted Cabinets w/ Laminate Doors and Door Fronts
D	Base Cabinet-Double Door Sink Unit	2' - 10 1/2"	3' - 6"	2' - 0"	1	Painted Cabinets w/ Laminate Doors and Door Fronts
E	Counter Top-L Shaped w Sink	3' - 0"		2' - 1"	1	Laminate
F	Counter Top	3' - 0"		1' - 8"	1	Stainless Steel

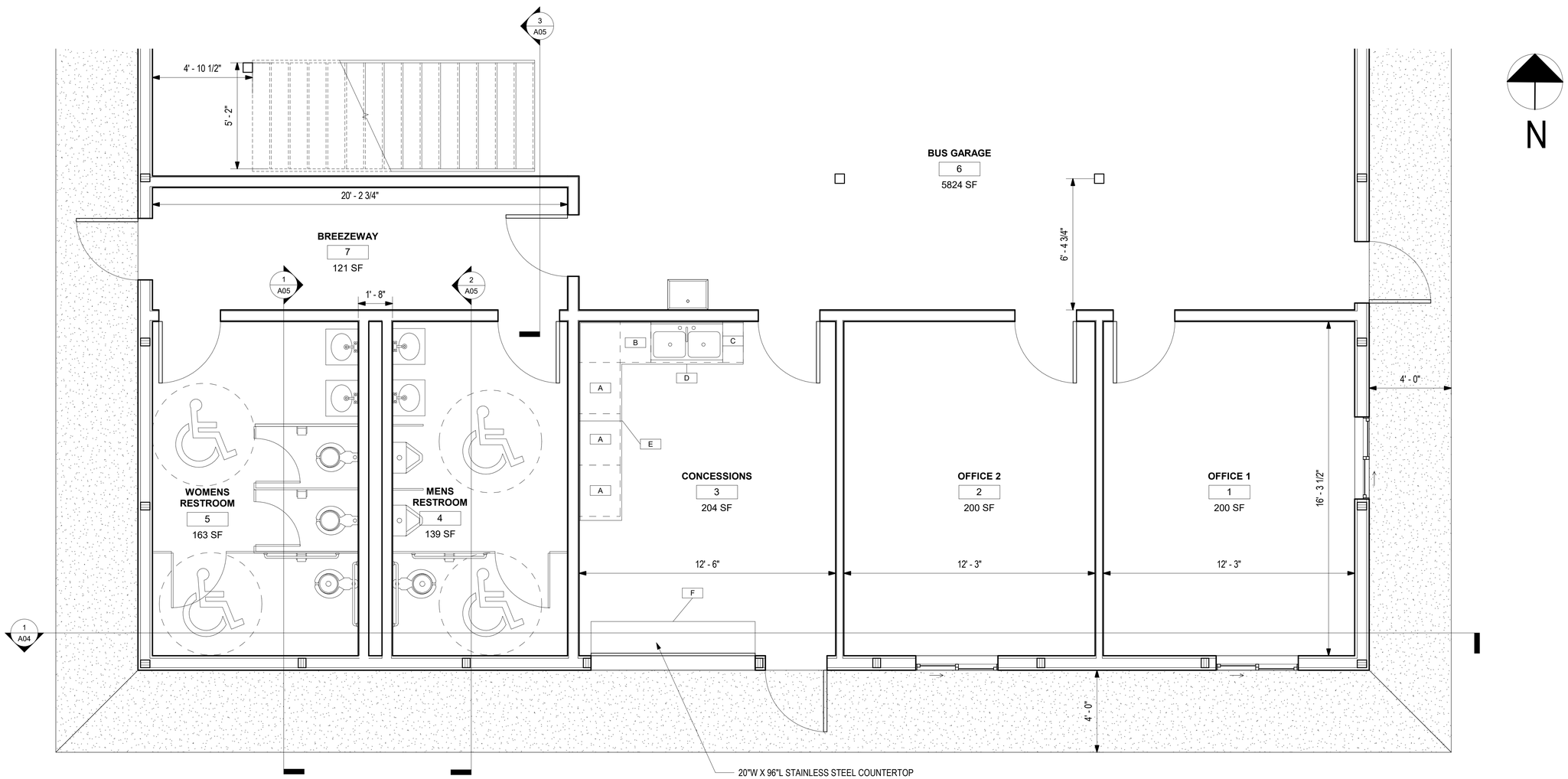

1 FLOOR PLAN - MAIN FLOOR - CALLOUT
3/8" = 1'-0"

MSS Engineering, LLC
ENGINEERING, CONSULTING, & DESIGN
414 W 5th St., Auburn, IN 46706
Phone: (260) 267-7414
Email: tamcdaniel@mssengineer.com
Travis A. McDaniel, PE

TRAVIS A. McDANIEL
REGISTERED
PE11800805
STATE OF INDIANA
PROFESSIONAL ENGINEER
Travis A. McDaniel
05/26/23

PROJECT LOCATION:
560 S 900 E
MARION, IN 46953

PROJECT NAME:
BID SPEC & DESIGN

DRAWING TITLE:
FLOOR PLAN - MAIN FLOOR CALLOUTS

REVISIONS:

NO.	DATE	DESCRIPTION	BY

JOB NUMBER: 22.081.171

DRAWN BY: CAS

ENGINEERED BY: CAS

START DATE: 05/12/21

PROGRESS DATE: 7/13/21

CERTIFIED DATE: 05/26/23

SCALE: 3/8" = 1'-0"

PAGE NUMBER:

A03 OF A09 SHEETS

REV.

REV.

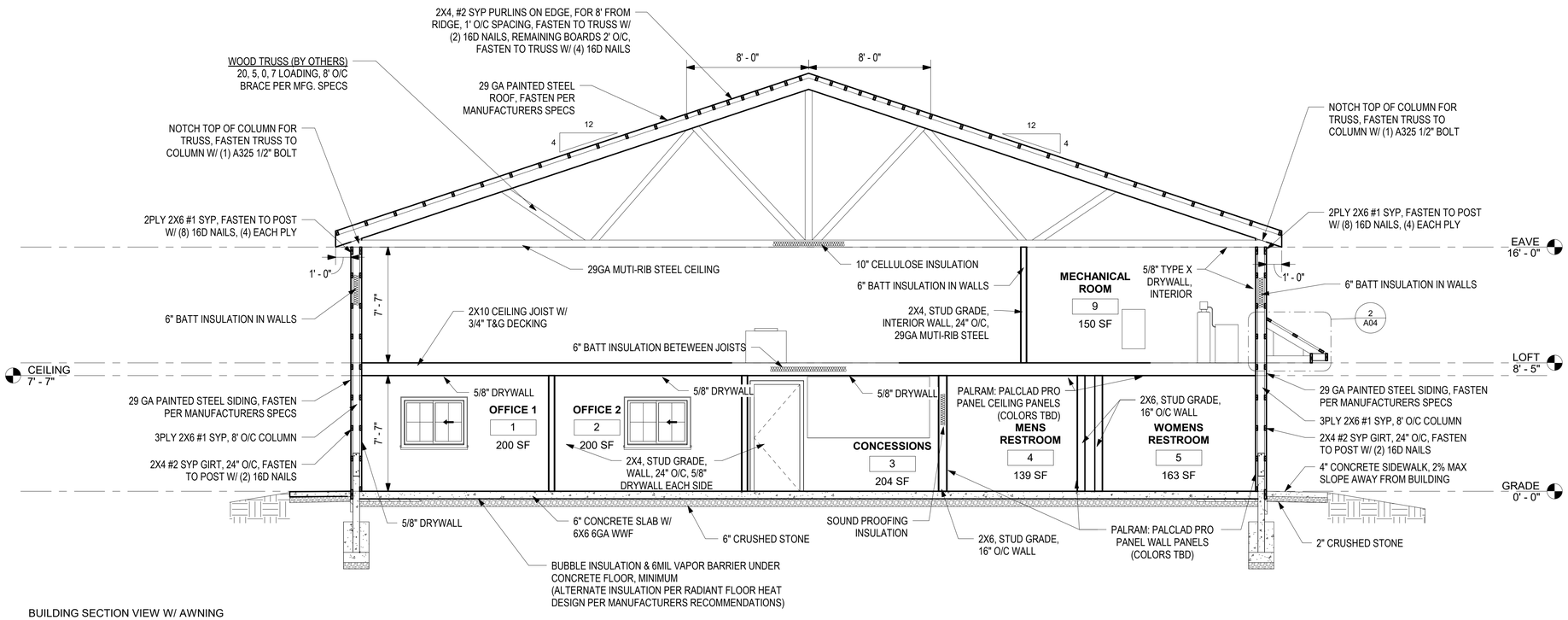

1 BUILDING SECTION VIEW W/ AWNING DETAIL
1/4" = 1'-0"

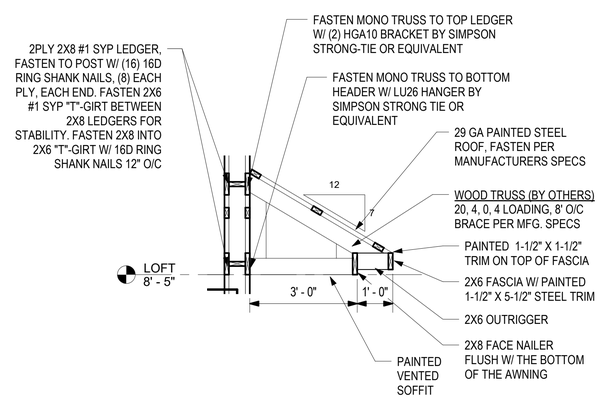

2 AWNING - CALLOUT
1/2" = 1'-0"

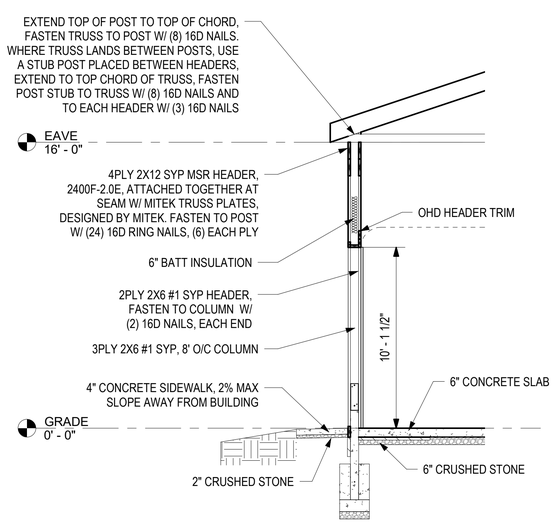

3 SIDEWALL OHD - SECTION VIEW
1/4" = 1'-0"

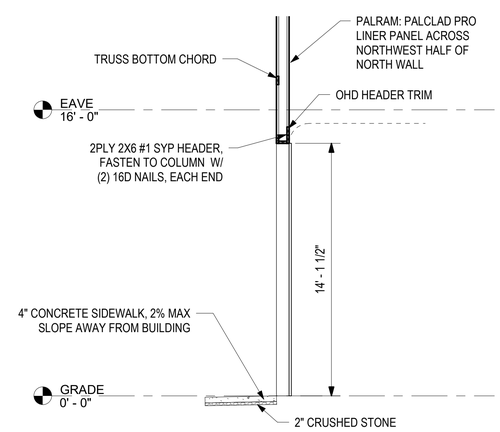

4 12'X14' OHD ENDWALL DETAIL - SECTION VIEW
1/4" = 1'-0"

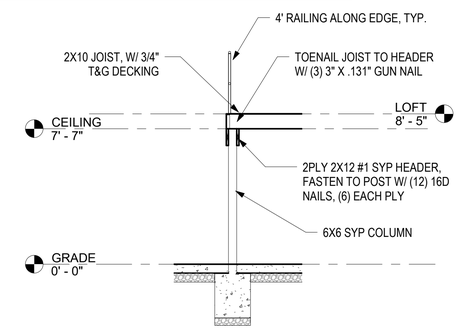

5 LOFT COLUMN - SECTION VIEW
1/4" = 1'-0"

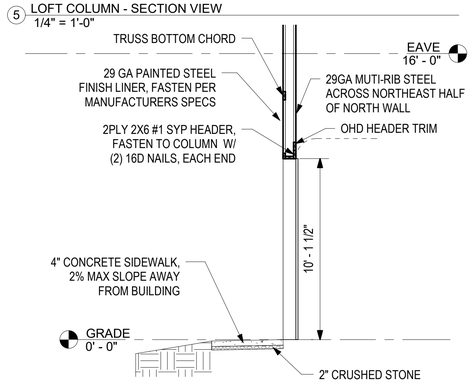

6 10'X10' OHD ENDWALL DETAIL - SECTION VIEW
1/4" = 1'-0"

MSS Engineering, LLC
ENGINEERING, CONSULTING, & DESIGN
414 W 5th St., Auburn, IN 46706
Phone: (260) 267-7414
Email: tamcdaniel@mssengineer.com
Travis A. McDaniel, PE

TRAVIS A. McDANIEL REGISTERED PE11800805 STATE OF INDIANA PROFESSIONAL ENGINEER

Travis A. McDaniel
05/26/23

PROJECT LOCATION:
560 S 900 E
MARION, IN 46953

PROJECT NAME: BID SPEC & DESIGN

DRAWING TITLE: BUILDING SECTION VIEWS AND DETAILS

REVISIONS:

NO.	DATE	DESCRIPTION	BY

JOB NUMBER: 22.081.171

DRAWN BY: CAS

ENGINEERED BY: CAS

START DATE: 05/12/21

PROGRESS DATE: 7/13/21

CERTIFIED DATE: 05/26/23

SCALE: As indicated

PAGE NUMBER:

A04 OF A09 SHEETS

REV.

REV.

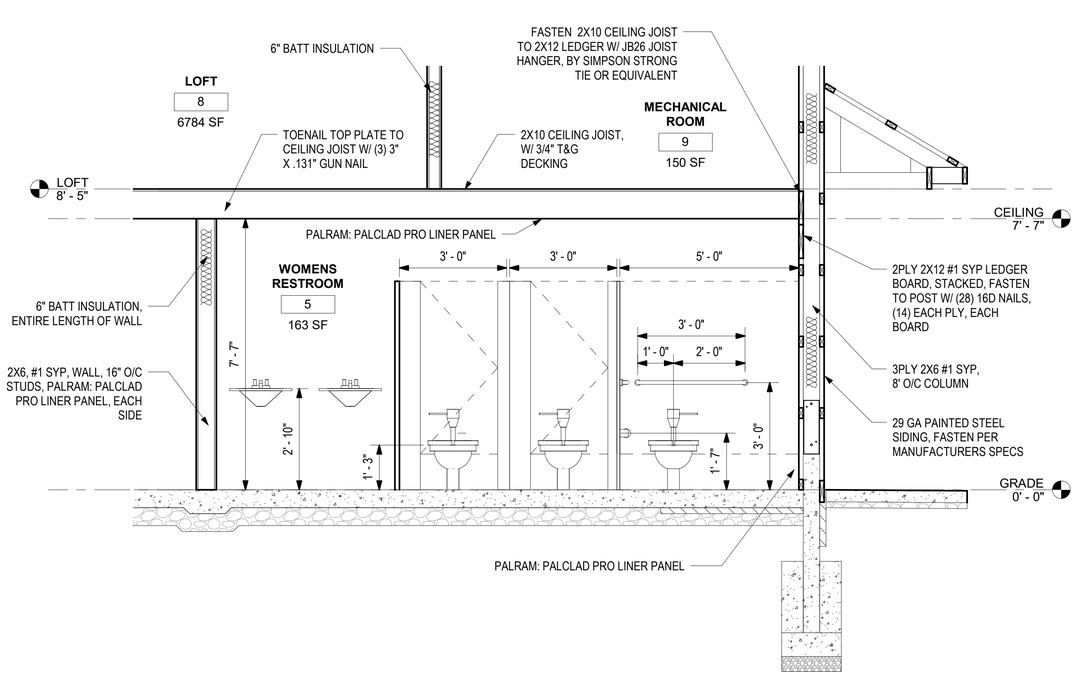

1 WOMENS RESTROOM - SECTION VIEW
1/2" = 1'-0"

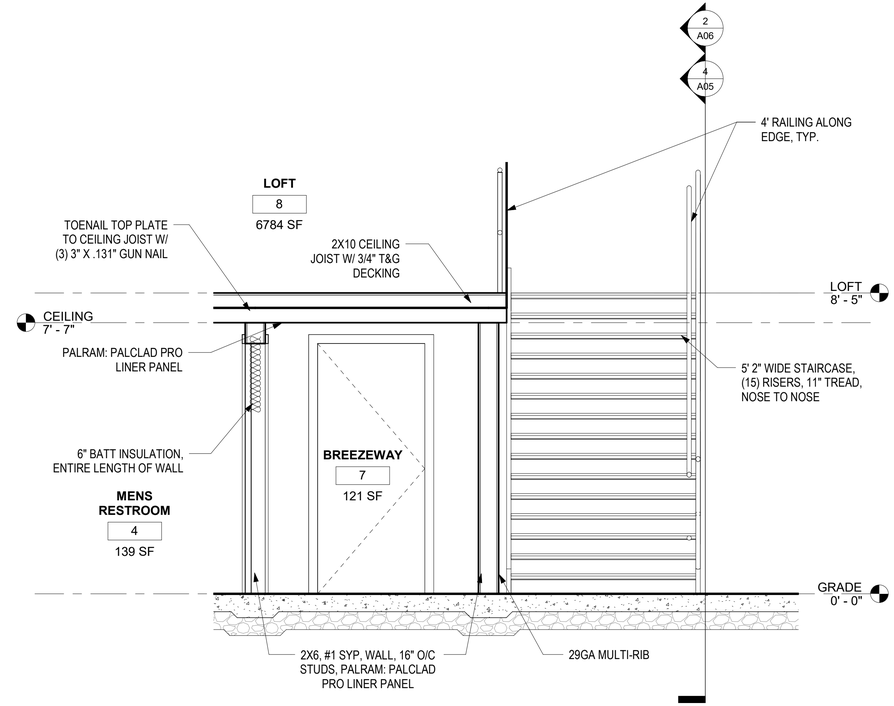

3 STAIRWELL - SECTION VIEW 1
1/2" = 1'-0"

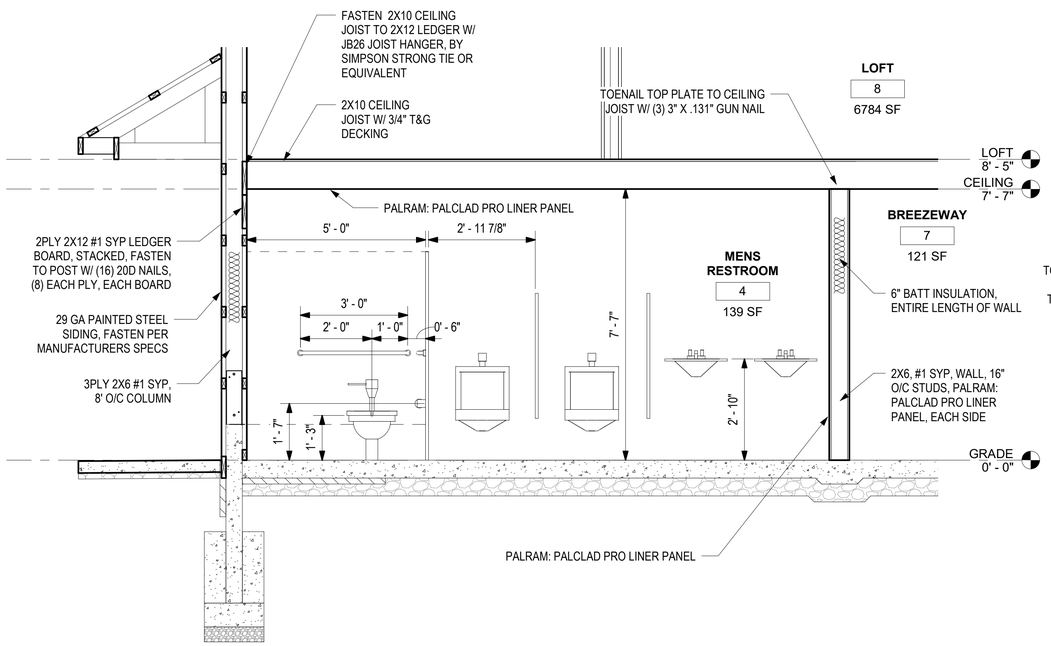

2 MENS RESTROOM - SECTION VIEW
1/2" = 1'-0"

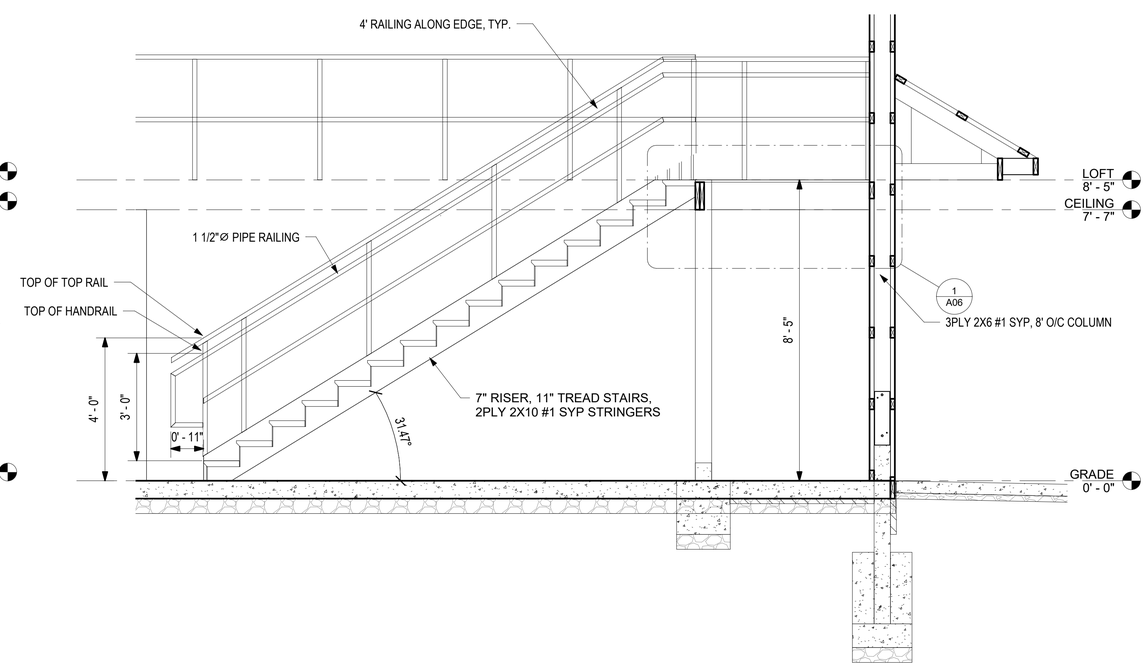

4 STAIRWELL - SECTION VIEW 2
1/2" = 1'-0"

MSS Engineering, LLC
ENGINEERING, CONSULTING, & DESIGN
414 W 5th St., Auburn, IN 46706
Phone: (260) 267-7414
Email: tamcdaniel@mssengineer.com
Travis A. McDaniel, PE

TRAVIS A. McDANIEL REGISTERED PE11800805 STATE OF INDIANA PROFESSIONAL ENGINEER

Travis A. McDaniel
05/26/23

PROJECT LOCATION:
560 S 900 E
MARION, IN 46953

PROJECT NAME:
BID SPEC & DESIGN

DRAWING TITLE:
RESTROOM AND STAIR SECTION VIEWS

REVISIONS:

NO.	DATE	DESCRIPTION	BY

JOB NUMBER: 22.081.171

DRAWN BY: CAS

ENGINEERED BY: CAS

START DATE: 05/12/21

PROGRESS DATE: 7/13/21

CERTIFIED DATE: 05/26/23

SCALE: 1/2" = 1'-0"

PAGE NUMBER:

A05 OF A09 SHEETS

REV.

REV.

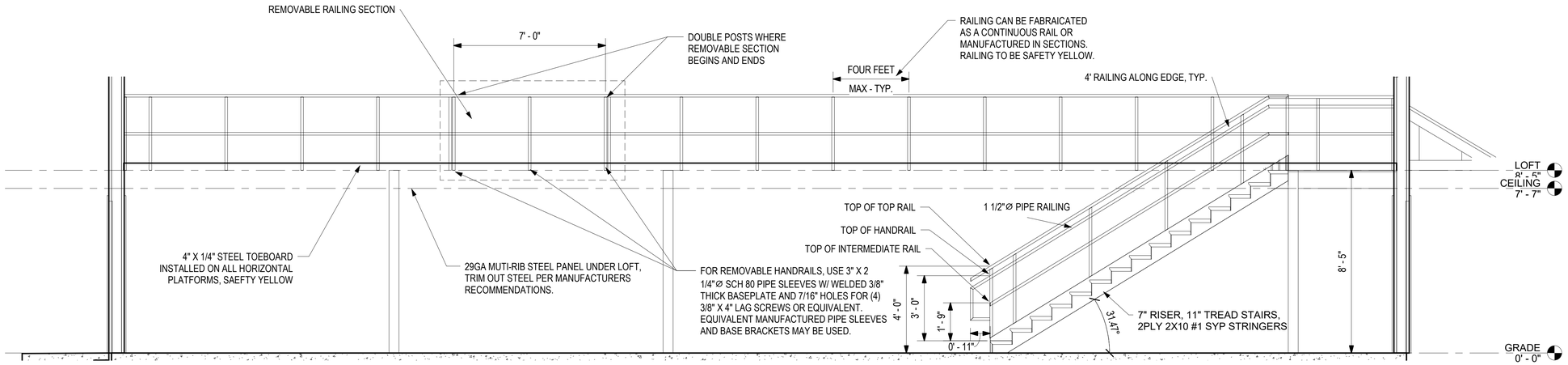

2 STAIRWELL - SECTION VIEW 3
3/8" = 1'-0"

NOTE: 3" X 2 1/4"Ø SCH 80 PIPE SLEEVES FOR BASE BRACKET, MANUFACTURED PIPE SLEEVES AND BASE BRACKETS MAY BE USED. (SIMILAR TO MCMASTER-CARR 5062T45) FASTEN TO WOOD FRAMING W/ (4) 3/8" X 4" LAG SCREWS OR EQUIVALENT.

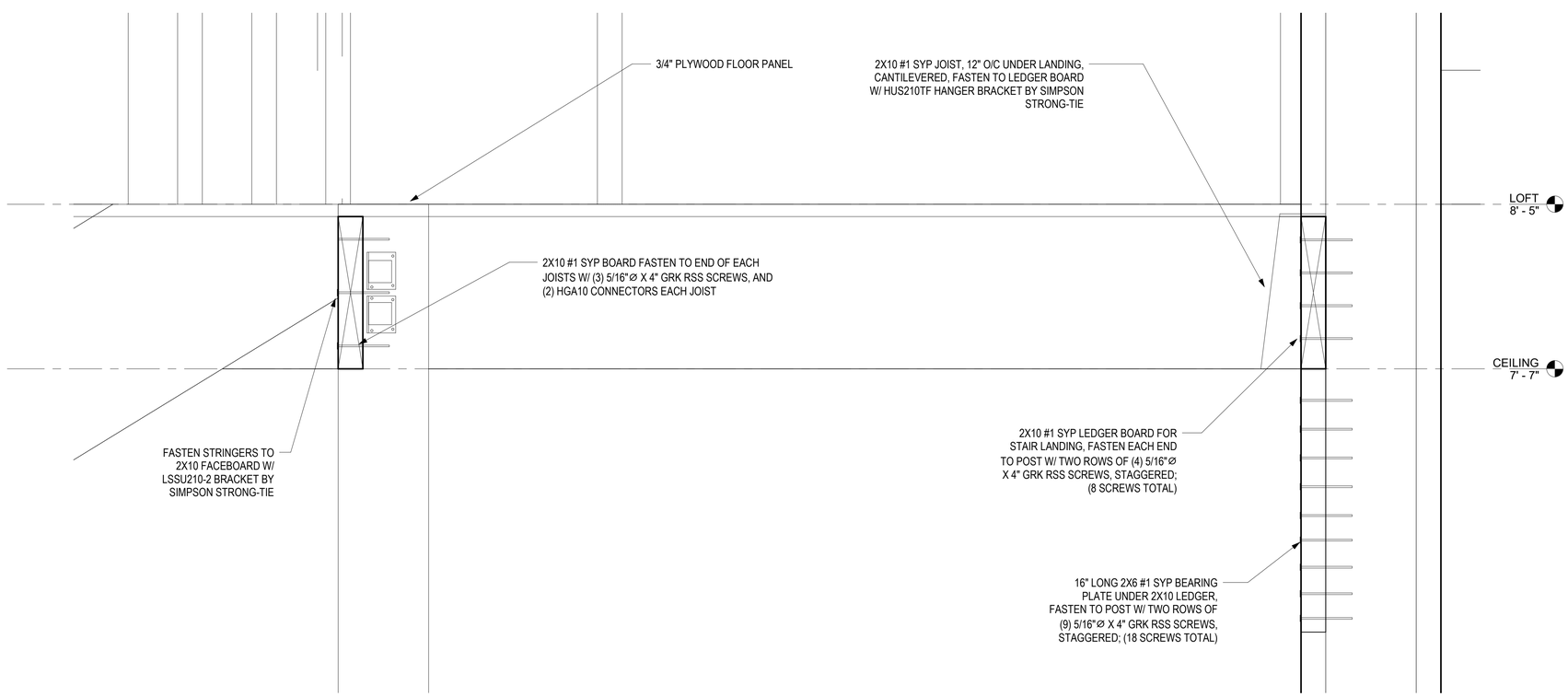

1 STAIRWELL - SECTION VIEW 2 - CALLOUT
3" = 1'-0"

MSS Engineering, LLC
ENGINEERING, CONSULTING, & DESIGN
414 W 5th St., Auburn, IN 46706
Phone: (260) 267-7414
Email: tamcdaniel@mssengineer.com
Travis A. McDaniel, PE

TRAVIS A. McDANIEL
REGISTERED
PE11800805
STATE OF INDIANA
PROFESSIONAL ENGINEER

Travis A. McDaniel
05/26/23

PROJECT LOCATION:
560 S 900 E
MARION, IN 46953

PROJECT NAME:
BID SPEC & DESIGN

DRAWING TITLE:
STAIR DETAILS

REVISIONS:

NO.	DATE	DESCRIPTION	BY

JOB NUMBER: 22.081.171

DRAWN BY: CAS

ENGINEERED BY: CAS

START DATE: 05/12/21

PROGRESS DATE: 7/13/21

CERTIFIED DATE: 05/26/23

SCALE: As indicated

PAGE NUMBER:

A06 OF A09 SHEETS

REV.

REV.

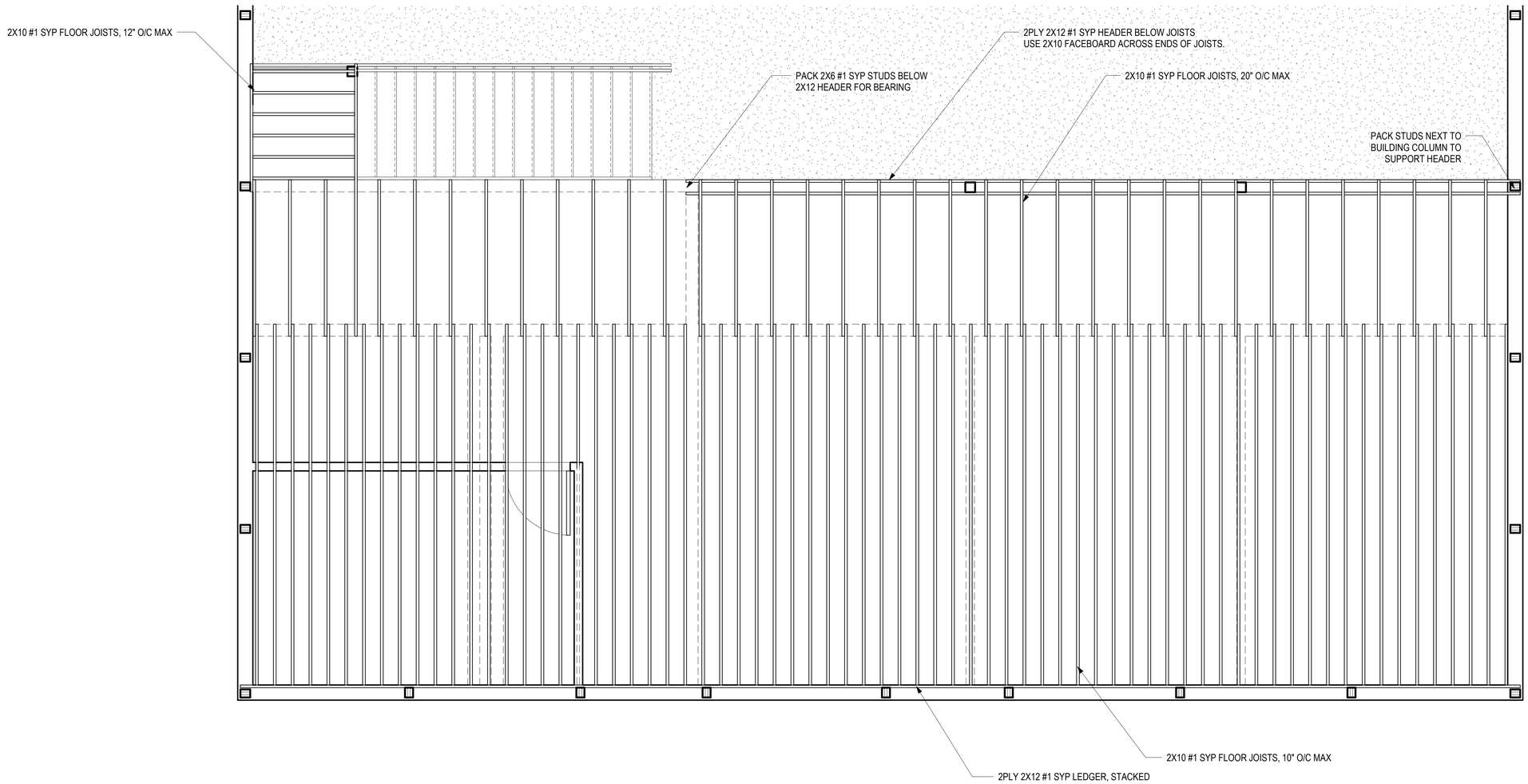

1 LOFT - FLOOR FRAMING PLAN
3/8" = 1'-0"

MSS Engineering, LLC
ENGINEERING, CONSULTING, & DESIGN
414 W 5th St., Auburn, IN 46706
Phone: (260) 267-7414
Email: tamcdaniel@mssengineer.com
Travis A. McDaniel, PE

TRAVIS A. McDANIEL
REGISTERED
PE11800805
STATE OF INDIANA
PROFESSIONAL ENGINEER

Travis A. McDaniel
05/26/23

PROJECT LOCATION:
560 S 900 E
MARION, IN 46953

PROJECT NAME:
BID SPEC & DESIGN

DRAWING TITLE:
LOFT - FLOOR FRAMING PLAN

REVISIONS:

NO.	DATE	DESCRIPTION	BY

JOB NUMBER: 22.081.171

DRAWN BY: TAM

ENGINEERED BY: TAM

START DATE: 09/16/21

PROGRESS DATE: 7/13/21

CERTIFIED DATE: 05/26/23

SCALE: 3/8" = 1'-0"

PAGE NUMBER:

A07 OF A09 SHEETS

REV.

REV. 2

ROOF FRAMING LINE LEGEND

- X-BRACING
- DIAGONAL BRACING
- CORNER BRACING
- LATERAL RESTRAINT
- OVERHANG
- RIDGE LINE

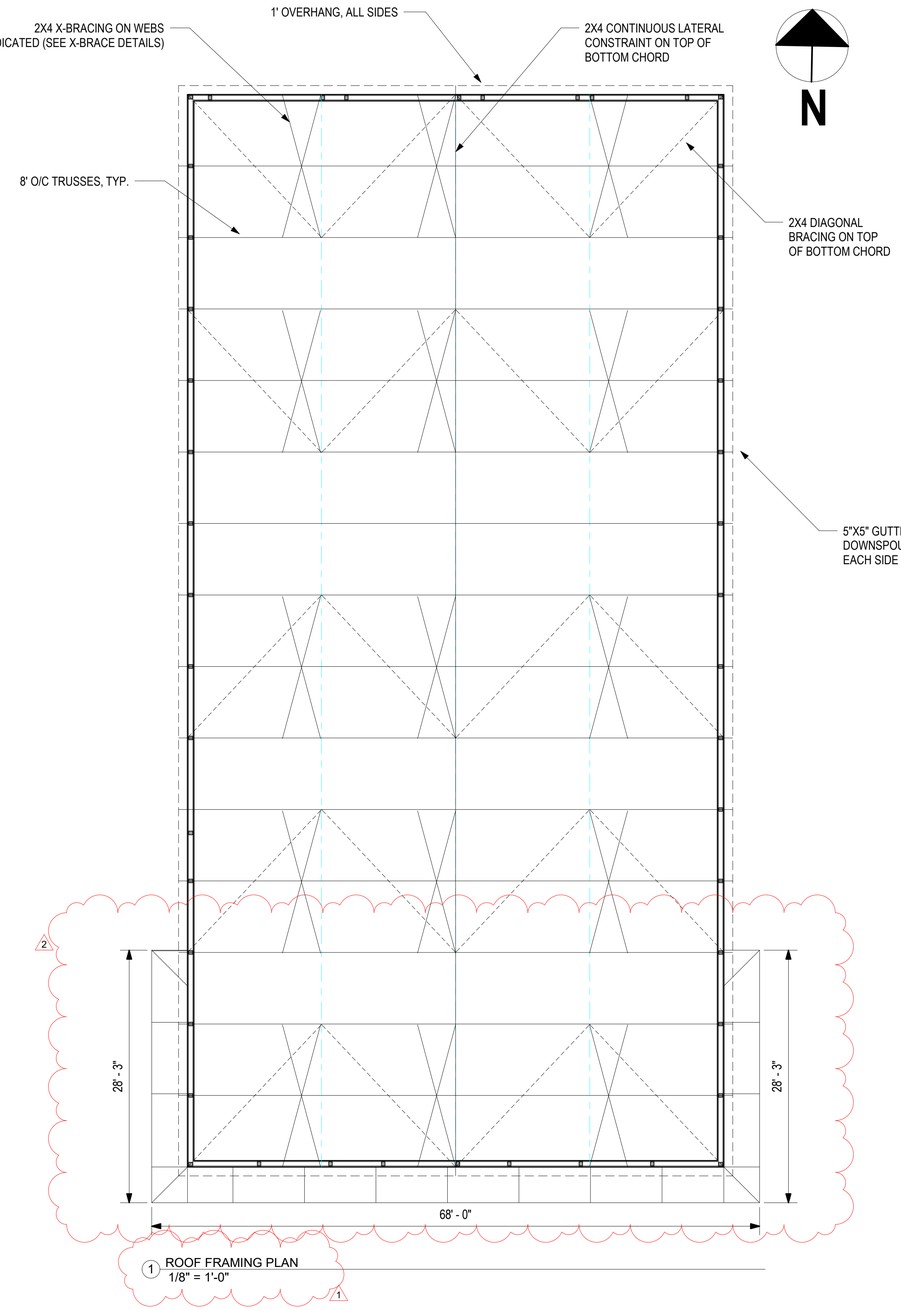

1 ROOF FRAMING PLAN
1/8" = 1'-0"

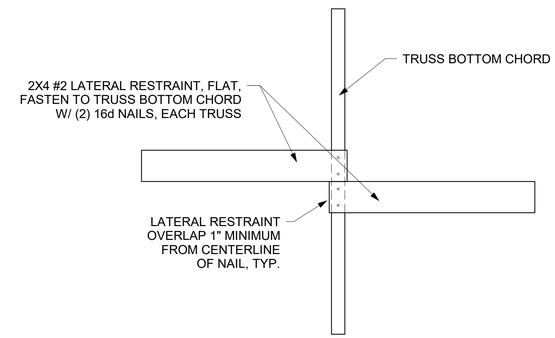

3 LATERAL RESTRAINT END LAP DETAIL
1 1/2" = 1'-0"

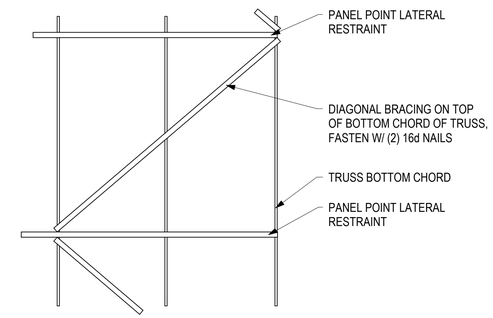

2 DIAGONAL BRACING DETAIL
1/4" = 1'-0"

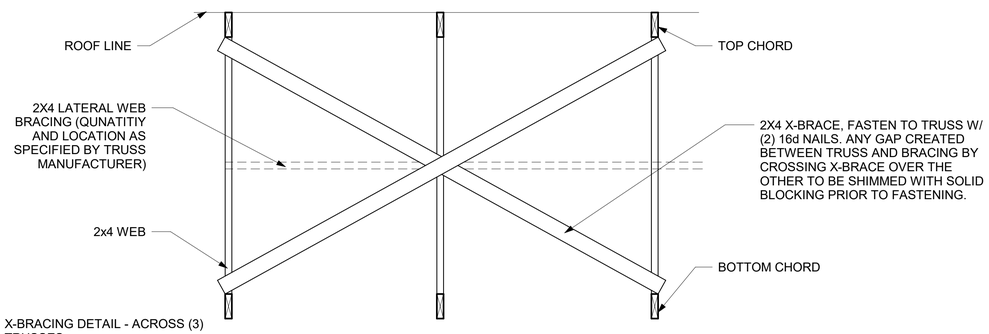

4 X-BRACING DETAIL - ACROSS (3) TRUSSES
3/4" = 1'-0"

MSS Engineering, LLC
ENGINEERING, CONSULTING, & DESIGN
414 W 5th St., Auburn, IN 46706
Phone: (260) 267-7414
Email: tamcdaniel@mssengineer.com
Travis A. McDaniel, PE

TRAVIS A. McDANIEL
REGISTERED
PE11800805
STATE OF INDIANA
PROFESSIONAL ENGINEER

Travis A. McDaniel
05/26/23

PROJECT LOCATION:
560 S 900 E
MARION, IN 46953

PROJECT NAME:
BID SPEC & DESIGN

DRAWING TITLE:
ROOF FRAMING PLAN

REVISIONS:

NO.	DATE	DESCRIPTION	BY
1	5/18/23	UPDATE/CORRECT NOTATION	TAM
2	5/26/23	ADD TO AWNING LENGTH	TAM

JOB NUMBER: 22.081.171

DRAWN BY: CAS

ENGINEERED BY: CAS

START DATE: 05/12/21

PROGRESS DATE: 7/13/21

CERTIFIED DATE: 05/26/23

SCALE: As indicated

PAGE NUMBER:

REV. 2

REV. 1

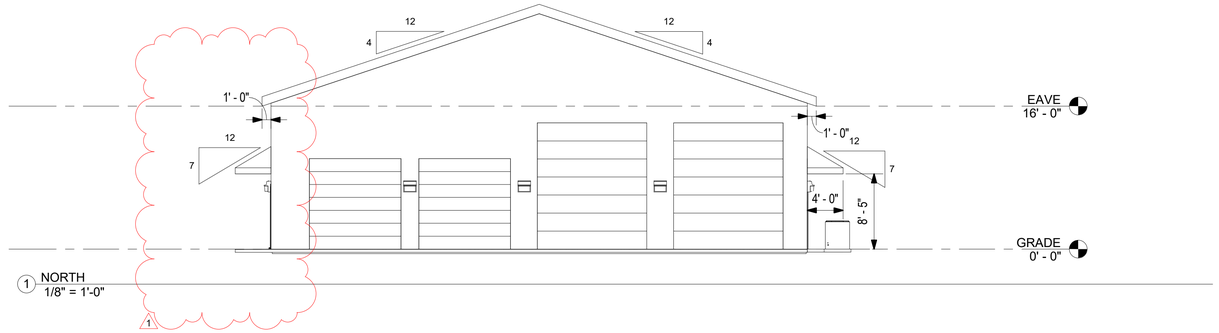

1 NORTH
1/8" = 1'-0"

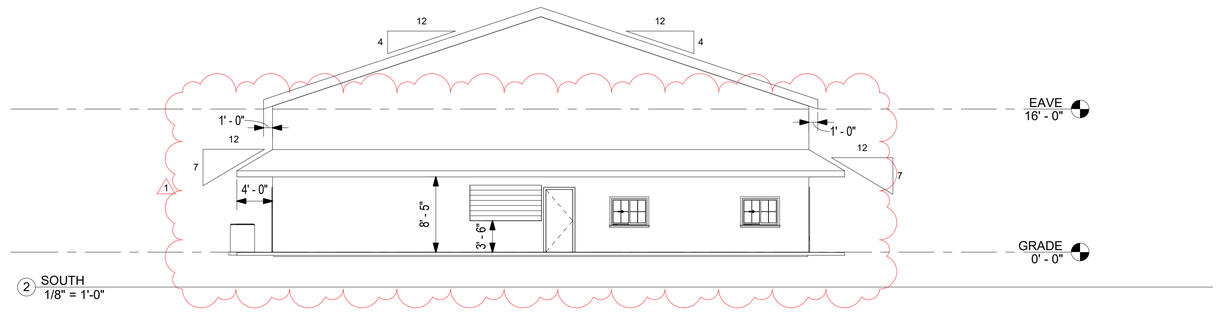

2 SOUTH
1/8" = 1'-0"

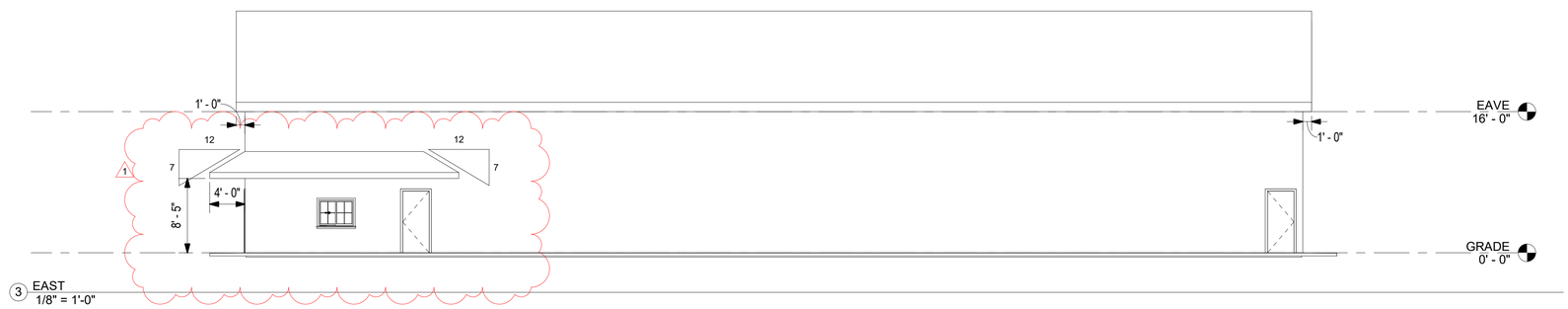

3 EAST
1/8" = 1'-0"

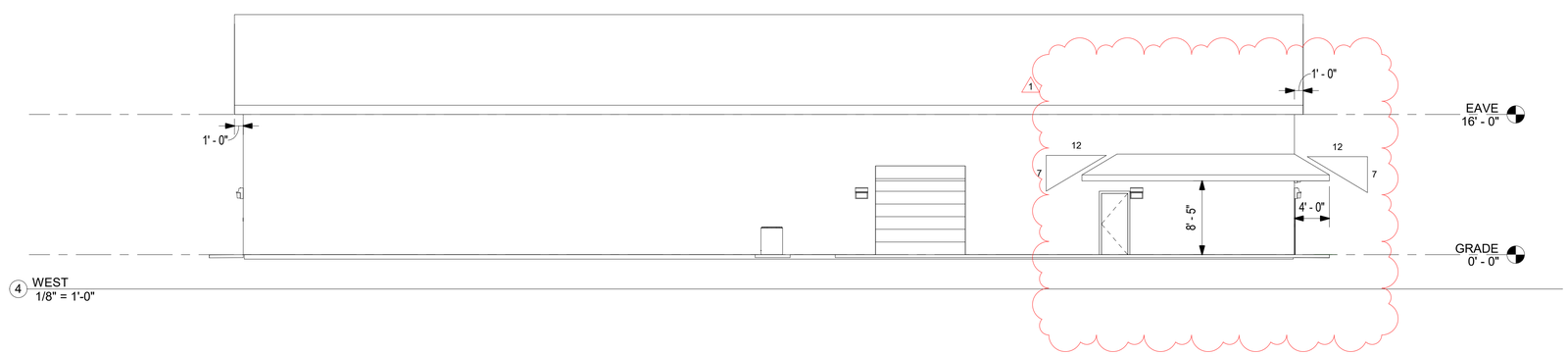

4 WEST
1/8" = 1'-0"

MSS Engineering, LLC
ENGINEERING, CONSULTING, & DESIGN
414 W 5th St., Auburn, IN 46706
Phone: (260) 267-7414
Email: tamcdaniel@mssengineer.com
Travis A. McDaniel, PE

TRAVIS A. McDANIEL
REGISTERED
PE11800805
STATE OF INDIANA
PROFESSIONAL ENGINEER

Travis A. McDaniel
05/26/23

PROJECT LOCATION:
560 S 900 E
MARION, IN 46953

PROJECT NAME:
BID SPEC & DESIGN

DRAWING TITLE:
ELEVATIONS

REVISIONS:

NO.	DATE	DESCRIPTION	BY
1	5/26/23	ADD TO AWNING LENGTH	TAM

JOB NUMBER: 22.081.171

DRAWN BY: CAS

ENGINEERED BY: CAS

START DATE: 05/12/21

PROGRESS DATE: 7/13/21

CERTIFIED DATE: 05/26/23

SCALE: 1/8" = 1'-0"

PAGE NUMBER:

A09 OF A09 SHEETS

REV. 1

REV. 1

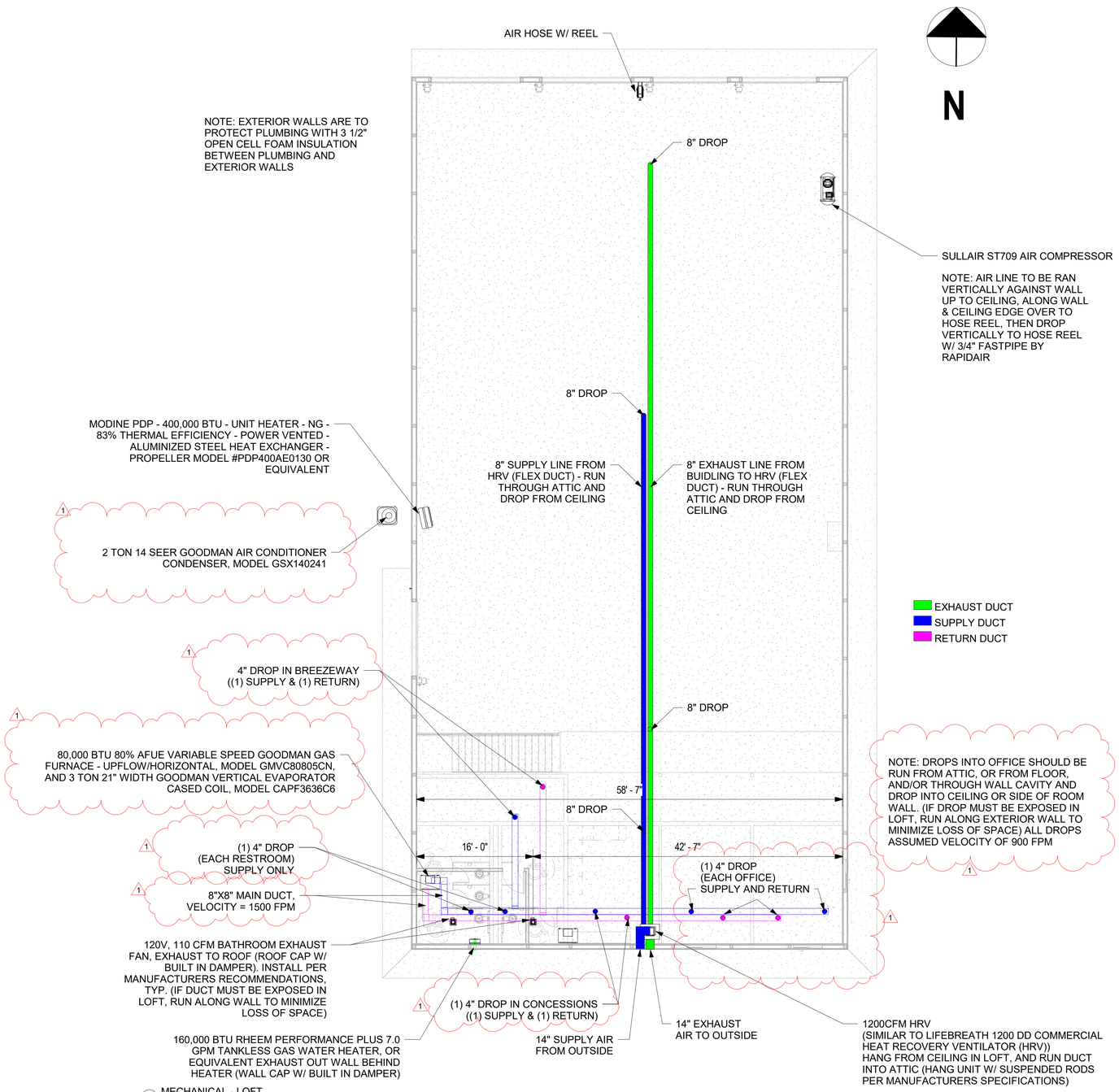

1 MECHANICAL - LOFT
1/8" = 1'-0"

MSS Engineering, LLC
ENGINEERING, CONSULTING, & DESIGN
414 W 5th St., Auburn, IN 46706
Phone: (260) 267-7414
Email: tamcdaniel@mssengineer.com
Travis A. McDaniel, PE

TRAVIS A. McDANIEL
REGISTERED
PE11800805
STATE OF INDIANA
PROFESSIONAL ENGINEER

Travis A. McDaniel
05/26/23

PROJECT LOCATION:
560 S 900 E
MARION, IN 46953

PROJECT NAME:
BID SPEC & DESIGN

DRAWING TITLE:
MECHANICAL PLAN

REVISIONS:

NO.	DATE	DESCRIPTION	BY
1	8/18/23	HVAC SYSTEM UPDATES	TAM

JOB NUMBER: 22.081.171

DRAWN BY: CAS

ENGINEERED BY: TAM

START DATE: 05/12/21

PROGRESS DATE: 07/13/21

CERTIFIED DATE: 05/26/23

SCALE: 1/8" = 1'-0"

PAGE NUMBER:

M01 OF M01 SHEETS

REV. 1

REV. 3

NOTE: EACH OHD TO HAVE A 02-103L 3-BUTTON SURFACE MOUNT STATION, PROVIDE (2) 893MAX VISOR REMOTE CONTROLS

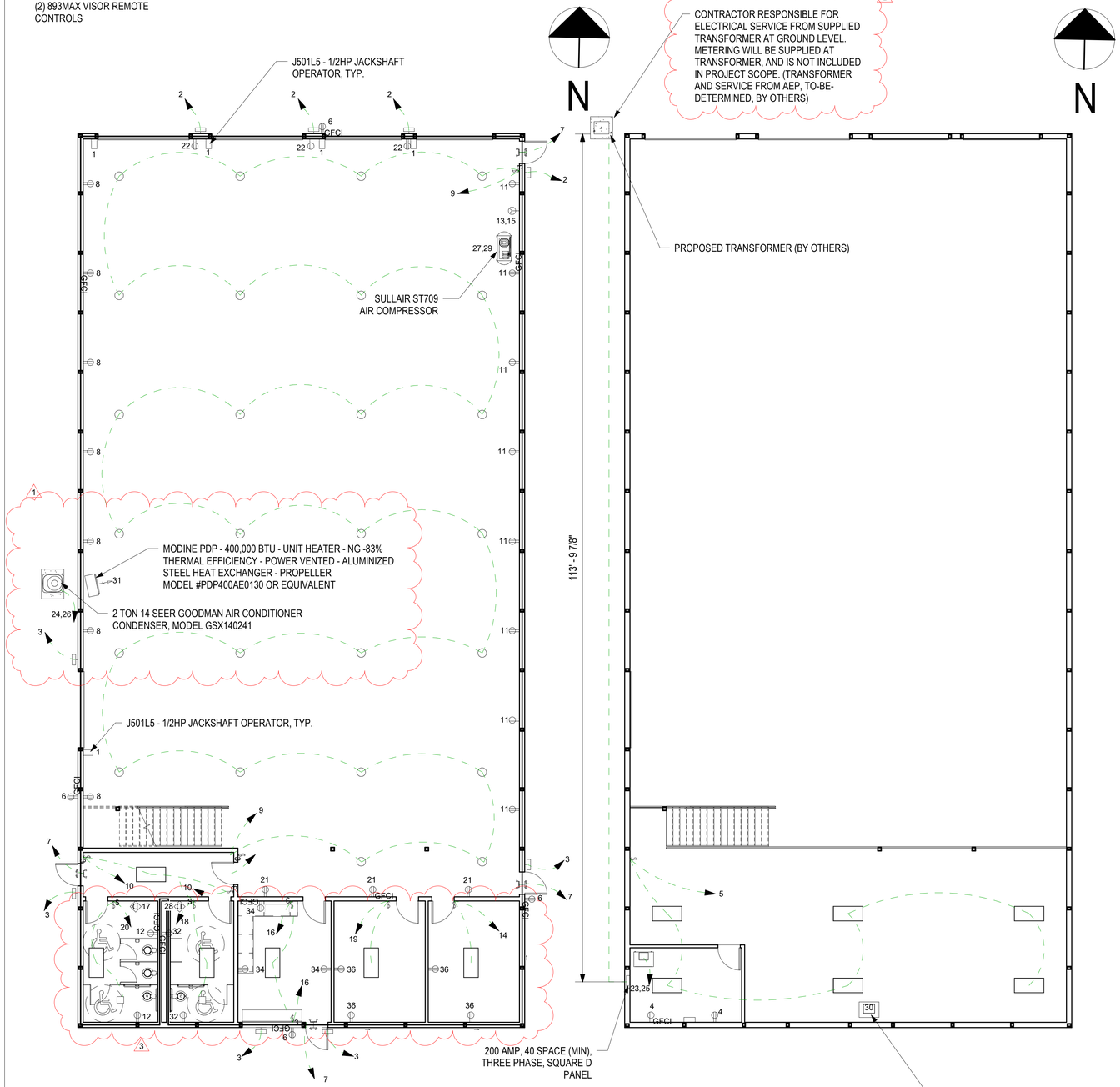

1 ELECTRICAL PLAN - MAIN FLOOR
1/8" = 1'-0"

2 ELECTRICAL PLAN - LOFT
1/8" = 1'-0"

Branch Panel: PL-1

Location: MECHANICAL ROOM 9
Supply From:
Mounting: Recessed
Enclosure:

Volts: 120/240 Single
Phases: 1 (120/208)
Wires: 3

A.I.C. Rating:
Mains Type:
Mains Rating: 200 A
MCB Rating: 200 A

Notes:

CKT	Circuit Description	Trip	Poles	A		B		Poles	Trip	Circuit Description	CKT
1	OHD OPERATORS	20 A	1	0 VA	280 VA			1	20 A	EXTERIOR LIGHTING - NORTH END	2
3	EXTERIOR LIGHTING - SOUTH END	20 A	1			350 VA	360 VA	1	20 A	DUPLEX RECEPTICLES - LOFT	4
5	LOFT LIGHTING	20 A	1	510 VA	720 VA			1	20 A	EXT. GFCI PROTECTED RECEPTICLES - NEMA 4	6
7	EMERGENCY EXIT SIGNS	20 A	1			500 VA	1260 VA	1	20 A	DUPLEX RECEPTICLES - BUS GARAGE WEST	8
9	LIGHTING - BUS GARAGE	20 A	1	4186 VA	80 VA			1	20 A	LIGHTING - BREEZEWAY	10
11	DUPLEX RECEPTICLES - BUS GARAGE EAST	20 A	1			1440 VA	360 VA	1	20 A	GFCI PROT. RECEPTICLES - MEN'S RESTROOM	12
13	220V RECEPTICLE - BUS GARAGE	20 A	2	180 VA	111 VA			1	20 A	LIGHTING - OFFICE 1	14
15	--	--	--			0 VA	80 VA	1	20 A	LIGHTING - CONCESSIONS	16
17	DYSON AIRBLADE V, MODEL HU02 - WOMENS...	20 A	1	1080 VA	229 VA			1	20 A	LIGHTING - MENS RESTROOM	18
19	LIGHTING - OFFICE 2	20 A	1			111 VA	229 VA	1	20 A	LIGHTING - WOMENS RESTROOM	20
21	DUPLEX RECEPTICLES - BUS GARAGE SOUTH	20 A	1	540 VA	540 VA			1	20 A	DUPLEX RECEPTICLES - BUS GARAGE NORTH	22
23	GOODMAN 5 TON CABINET HAVAC SYSTEM	30 A	2			5408 VA	2530 VA	2	30 A	GOODMAN HEAT PUMP	24
25	--	--	--	5408 VA	2530 VA			--	--	--	26
27	SULLAIR ST709 AIR COMPRESSOR	30 A	2			15 VA	1080 VA	1	20 A	DYSON AIRBLADE V, MODEL HU02, MENS...	28
29	--	--	--	15 VA	100 VA			1	20 A	1200CFM HEAT RECOVERY VENTILATOR (HRV)	30
31	Modine PDP - 400,000 BTU - UNIT HEATER	20 A	1			828 VA	360 VA	1	20 A	GFCI PROT. RECEPTICLES - WOMEN'S...	32
33	Spare	20 A	1	0 VA	540 VA			1	20 A	GFCI PROT. RECEPTICLES - CONCESSIONS	34
35	Spare	20 A	1			0 VA	720 VA	1	20 A	DUPLEX RECEPTICLES - OFFICES	36
37	Spare	20 A	1	0 VA	0 VA			1	20 A	Spare	38
39	Spare	20 A	1			0 VA	0 VA	1	20 A	Spare	40
			Total Load:	16517 VA		14918 VA					
			Total Amps:	138 A		124 A					

Legend:

Load Classification	Connected Load	Demand Factor	Estimated Demand	Panel Totals	
Appliance - Dwelling Unit	2160 VA	100.00%	2160 VA		
Cooling	15976 VA	100.00%	15976 VA	**Total Conn. Load:**	31425 VA
Heating	828 VA	100.00%	828 VA	**Total Est. Demand:**	31582 VA
Lighting - Dwelling Unit	960 VA	100.00%	960 VA	**Total Conn.:**	131 A
Lighting - Exterior	630 VA	125.00%	788 VA	**Total Est. Demand:**	132 A
Other	270 VA	100.00%	270 VA		
Receptacle	7020 VA	100.00%	7020 VA		
Lighting	4827 VA	100.00%	4827 VA		

Notes:
EXISTING CONNECTED LOAD ESTIMATES BASED ON CONSERVATIVE ASSUMPTIONS.

ELECTRICAL SYMBOL LEGEND	
OUTLETS	
	220 VOLT RECEPTACLE
	DUPLEX RECEPTACLE
GFCI	DUPLEX RECEPTACLE, GFCI
SWITCHES	
$	SINGLE POLE SWITCH
$ S	OCCUPANCY SENSOR SWITCH
$ 3	3-WAY SWITCH

ELECTRICAL SYMBOL LEGEND
1/4" = 1'-0"

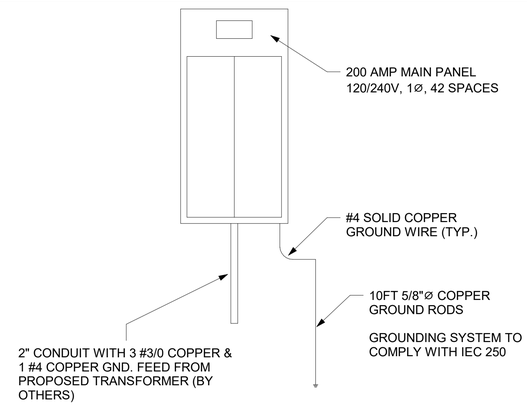

POWER RISER DIAGRAM
NOT TO SCALE

LIGHT FIXTURE SYMBOL LEGEND & SCHEDULE
4' - LED PANEL, CEILING OR SURFACE MOUNT LIGHT FIXTURE
22" Ø - LED HIGH BAY
18 WATT LED EXTERIOR WALL MOUNTED LIGHT FIXTURE (WALL PACK) WITH PHOTOCELL. EQUAL TO LUMARK XTOR2B-W-PC.
SELF-POWERED EMERGENCY EXIT LIGHT W/ DUAL HEAD AND REMOTE. EXTERIOR DUAL HEAD (NEAR THE DOOR) EMERGENCY LIGHTING & CHARGER WITH EMERGENCY BATTERY BACKUP FOR A DURATION OF NOT LESS THAN 1-1/2 HOURS. EQUAL TO ECONOLITE E-XCL2RCW SERIES.
110 CFM - BATHROOM EXHAUST FAN W/ LIGHT

LIGHT FIXTURE SYMBOL LEGEND & SCHEDULE
1/4" = 1'-0"

MAIN BREAKERS TO BE 50,000 AIC RATED ALL BREAKERS TO BE 10,000 AIC RATED

WIRE AND CONDUIT SIZE SCHEDULE

AMPS	WIRE SIZE	CONDUIT SIZE
20A	#12	3/4"
25A	#10	3/4"
30A	#10	3/4"
35A	#8	1"
50A	#8	1"
60A	#6	1"
85A	#4	1 1/4"
100A	#3	1 1/2"
200A	#3/0 THHN	2"

INSULATION TYPE FOR 75° C THHN OR THWN DEPENDING ON LOCATION AND ALL EQUIPMENT AND TERMINATIONS. ANY OTHER DIFFERENCES IN INSTALLATIONS SHALL BE GIVEN TO PLAN REVIEW AND PROVIDE CATALOG CUT SHEETS.

MSS Engineering, LLC
ENGINEERING, CONSULTING, & DESIGN
414 W 5th St., Auburn, IN 46706
Phone: (260) 267-7414
Email: tamcdaniel@mssengineer.com
Travis A. McDaniel, PE

TRAVIS A. McDANIEL REGISTERED PE11800805 STATE OF INDIANA PROFESSIONAL ENGINEER

Travis A. McDaniel
05/26/23

PROJECT LOCATION:
560 S 900 E
MARION, IN 46953

PROJECT NAME: BID SPEC & DESIGN

DRAWING TITLE: ELECTRICAL PLAN

REVISIONS:

NO.	DATE	DESCRIPTION	BY
1	5/18/23	UPDATE/CORRECT NOTATION	TAM
2	5/26/23	ELECTRICAL PLAN UPDATES	TAM
3	5/26/23	UPDATE RECEPTICLE CIRCUIT FOR PANEL	TAM

JOB NUMBER: 22.081.171

DRAWN BY: CAS
ENGINEERED BY: TAM

START DATE: 05/12/21
PROGRESS DATE: 7/13/21
CERTIFIED DATE: 05/26/23
SCALE: As indicated
PAGE NUMBER:

E01 OF E01 SHEETS

REV. 3

REV.

NOTE: WATER SUPPLY LINES CAN BE INSTALLED IN EXTERIOR BETWEEN GIRTS AND IN FRONT OF COLUMNS, AND SHALL BE PROTECTED WITH ADDITIONAL 3 1/2" OPEN CELL FOAM CAVITY INSULATION BETWEEN PLUMBING AND EXTERIOR WALLS. ADDITIONALLY PROTECTED WATER SUPPLY LINES MAY BE INSTALLED IN THE SLAB OR IN CEILING, AS LONG AS LINES ARE PROTECTED FROM FREEZE. SEE PEX TUBING NOTES.

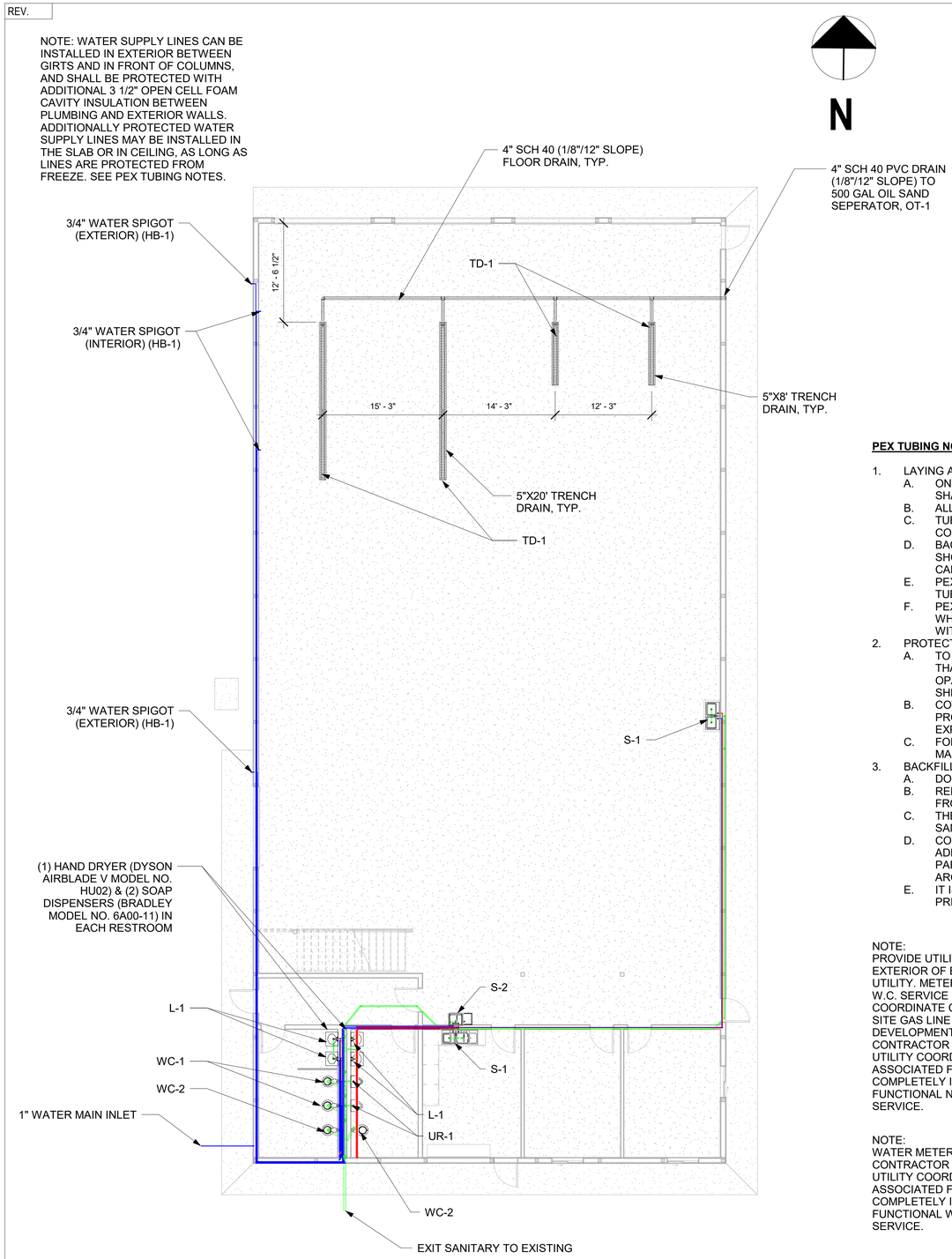

1 PLUMBING - MAIN FLOOR
1/8" = 1'-0"

PEX TUBING NOTES:

1. LAYING AND SUPPORTING TUBING UNDER SLAB
   - A. ONLY CONTINUOUSLY-RUN LENGTHS OF TUBING WITHOUT FITTINGS SHALL BE USED WHEN INSTALLING PEX UNDER A SLAB.
   - B. ALL CONNECTIONS SHALL BE OUTSIDE OR ABOVE THE SLAB.
   - C. TUBING SHALL BE COMPLETELY BURIED BY A SUITABLE, EASILY COMPACTED,
   - D. BACKFILL MATERIAL SUCH AS SAND OR PEA GRAVEL. PEX TUBING SHOULD BE INSTALLED UNDER THE REBAR, RE-MESH, OR TENSIONING CABLES IN THE SLAB.
   - E. PEX TUBING SHALL BE COVERED OR FASTENED TO PREVENT THE TUBING FROM FLOATING OR BEING PULLED UP TO THE SLAB SURFACE.
   - F. PEX TUBING DOES NOT HAVE TO BE SLEEVED ITS ENTIRE LENGTH WHERE IT LIES BENEATH A SLAB. PEX TUBING SHALL BE PROTECTED WITH A NON-METALLIC SLEEVE WHERE IT COMES THROUGH THE SLAB.
2. PROTECTION OF TUBING AND FITTINGS FROM UV EXPOSURE
   - A. TO PREVENT DAMAGE FROM UV EXPOSURE, PEX TUBING AND FITTINGS THAT ARE EXPOSED ABOVE THE SLAB SHALL BE WRAPPED WITH AN OPAQUE COVERING SUCH AS BLACK POLYETHYLENE BAGS OR SHEETING IMMEDIATELY AFTER THE POURING OF THE SLAB.
   - B. COVERING SHOULD EXTEND DOWN TO THE SURFACE OF THE SLAB TO PROTECT ALL OF THE TUBE ABOVE THE SLAB FROM EXCESSIVE UV EXPOSURE.
   - C. FOR SPECIFIC LIMITATIONS ON UV EXPOSURE, CONSULT THE PEX TUBE MANUFACTURER.
3. BACKFILLING
   - A. DO NOT USE CLAY, SILT, OR ROCKY BACKFILL.
   - B. REMOVE THE CONSTRUCTION MATERIALS, TRASH, OR FOREIGN OBJECTS FROM TRENCH PRIOR TO BACKFILLING.
   - C. THE TUBING SHOULD BE SURROUNDED WITH GOOD CLEAN FILL, OR SAND, OR RIVER RUN GRAVEL OF 1/2-INCH MAXIMUM PARTICLE SIZE.
   - D. COMPACT THE INITIAL BACKFILL AROUND THE TUBING TO PROVIDE ADEQUATE TUBING SUPPORT AND PREVENT SETTLEMENT. IT IS PARTICULARLY IMPORTANT TO ADEQUATELY COMPACT THE SOIL AROUND THE TAP CONNECTION.
   - E. IT IS RECOMMENDED THAT THE TUBING BE PRESSURIZED WITH WATER PRIOR TO BACKFILLING TO REVEAL ANY DAMAGE.

NOTE:
PROVIDE UTILITY METER AT EXTERIOR OF BUILDING FROM GAS UTILITY. METER SHALL PROVIDE 7" W.C. SERVICE INTO BUILDING. COORDINATE CONNECTION TO SITE GAS LINE WITH SITE DEVELOPMENT DRAWINGS. CONTRACTOR RESPONSIBLE FOR UTILITY COORDINATION AND ALL ASSOCIATED FEES TO PROVIDE A COMPLETELY INSTALLED AND FUNCTIONAL NATURAL GAS SERVICE.

NOTE:
WATER METER BY UTILITY CONTRACTOR RESPONSIBLE FOR UTILITY COORDINATION AND ALL ASSOCIATED FEES TO PROVIDE A COMPLETELY INSTALLED AND FUNCTIONAL WATER UTILITY SERVICE.

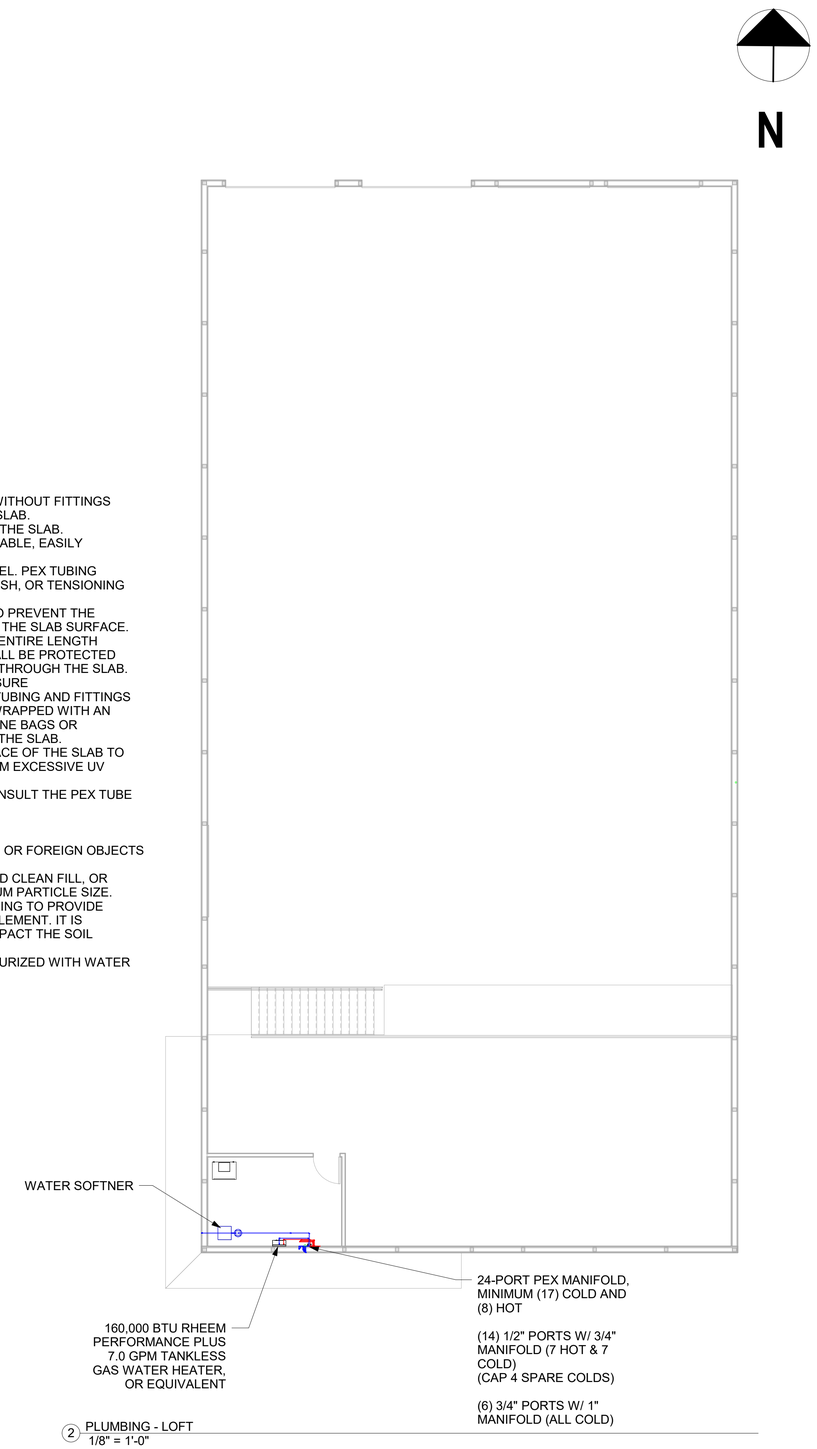

2 PLUMBING - LOFT
1/8" = 1'-0"

MSS Engineering, LLC
ENGINEERING, CONSULTING, & DESIGN
414 W 5th St., Auburn, IN 46706
Phone: (260) 267-7414
Email: tamcdaniel@mssengineer.com
Travis A. McDaniel, PE

TRAVIS A. McDANIEL REGISTERED PE11800805 STATE OF INDIANA PROFESSIONAL ENGINEER

Travis A. McDaniel
05/26/23

PROJECT LOCATION:
560 S 900 E
MARION, IN 46953

PROJECT NAME:
BID SPEC & DESIGN

DRAWING TITLE:
PLUMBING PLAN

REVISIONS:

NO.	DATE	DESCRIPTION	BY

JOB NUMBER: 22.081.171

DRAWN BY: CAS

ENGINEERED BY: TAM

START DATE: 05/12/21

PROGRESS DATE: 07/13/21

CERTIFIED DATE: 05/26/23

SCALE: 1/8" = 1'-0"

PAGE NUMBER:

P01 OF P04 SHEETS

REV.

REV.

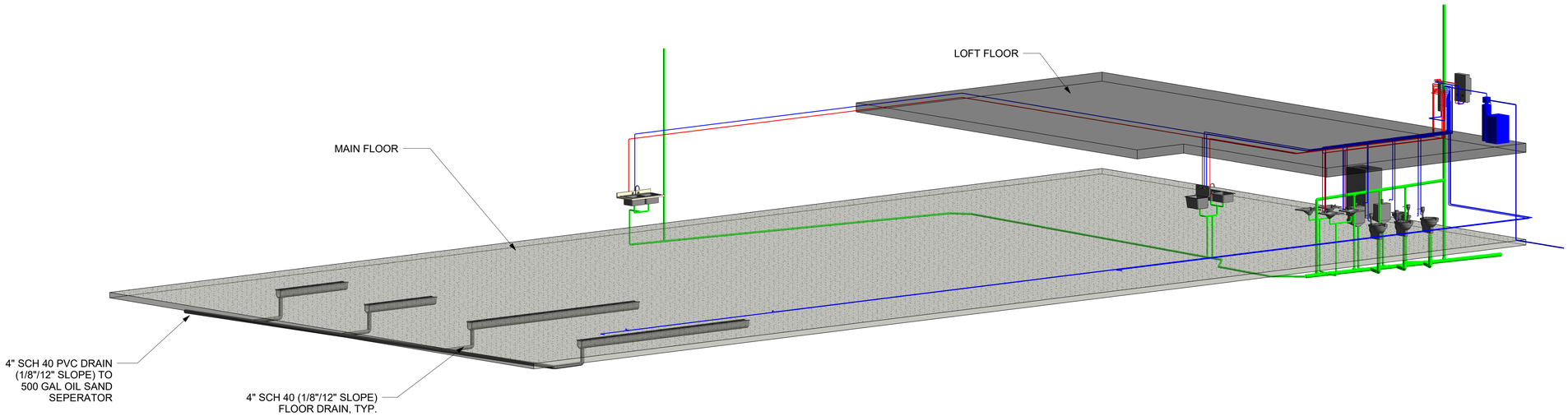

1 PLUMBING - ISOMETRIC 1

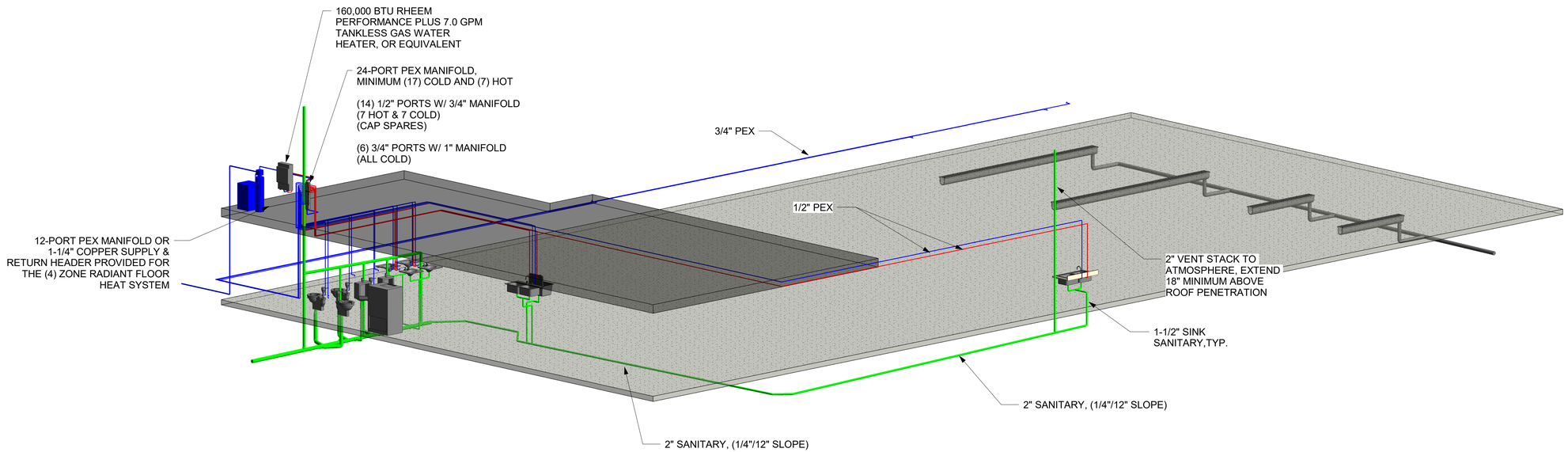

2 PLUMBING - ISOMETRIC 2

MSS Engineering, LLC
ENGINEERING, CONSULTING, & DESIGN
414 W 5th St., Auburn, IN 46706
Phone: (260) 267-7414
Email: tamcdaniel@mssengineer.com
Travis A. McDaniel, PE

TRAVIS A. McDANIEL REGISTERED PE11800805 STATE OF INDIANA PROFESSIONAL ENGINEER

Travis A. McDaniel
05/26/23

PROJECT LOCATION:
560 S 900 E
MARION, IN 46953

PROJECT NAME:
BID SPEC & DESIGN

DRAWING TITLE:
PLUMBING ISOMETRICS

REVISIONS:

NO.	DATE	DESCRIPTION	BY

JOB NUMBER: 22.081.171

DRAWN BY: CAS

ENGINEERED BY: TAM

START DATE: 05/12/21

PROGRESS DATE: 07/13/21

CERTIFIED DATE: 05/26/23

SCALE:

PAGE NUMBER:

P02 OF P04 SHEETS

REV.

REV.

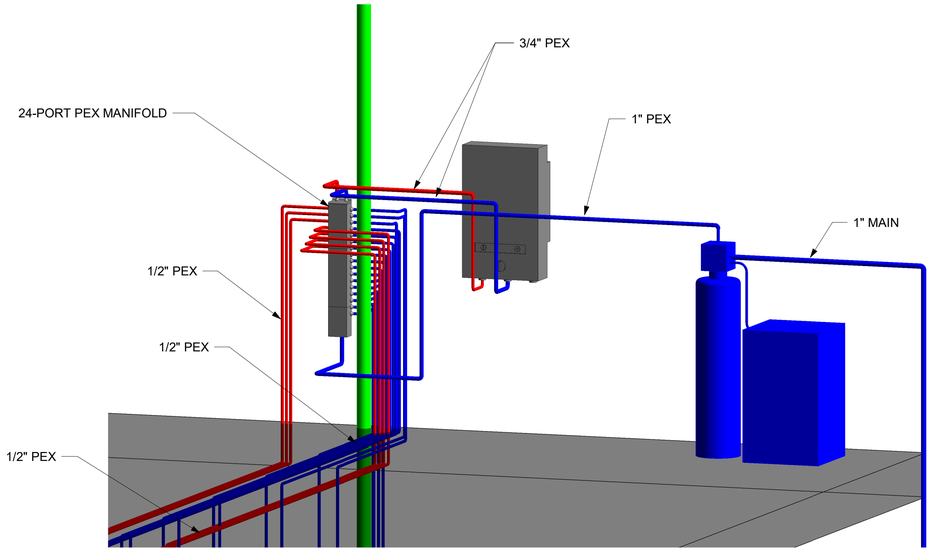

1 PLUMBING - ISOMETRIC 3

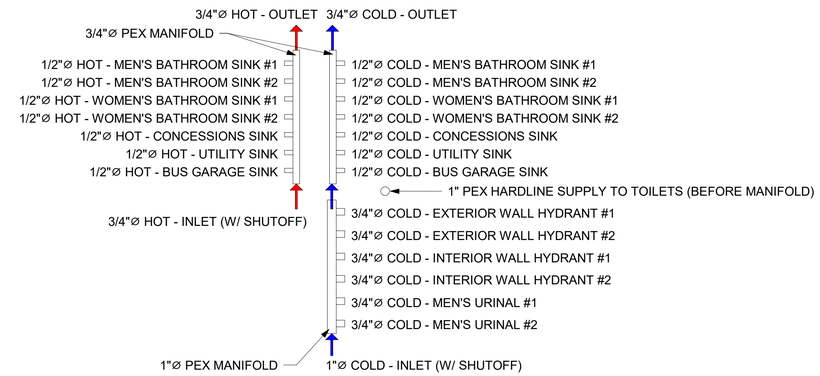

NOTE: ALL SUPPLY WATER SHALL BE SOFTENED. (ALL CONNECTIONS REQUIRE INDIVIDUAL SHUTOFF)

3 SUPPLY PEX MANIFOLD DETAIL
1 1/2" = 1'-0"

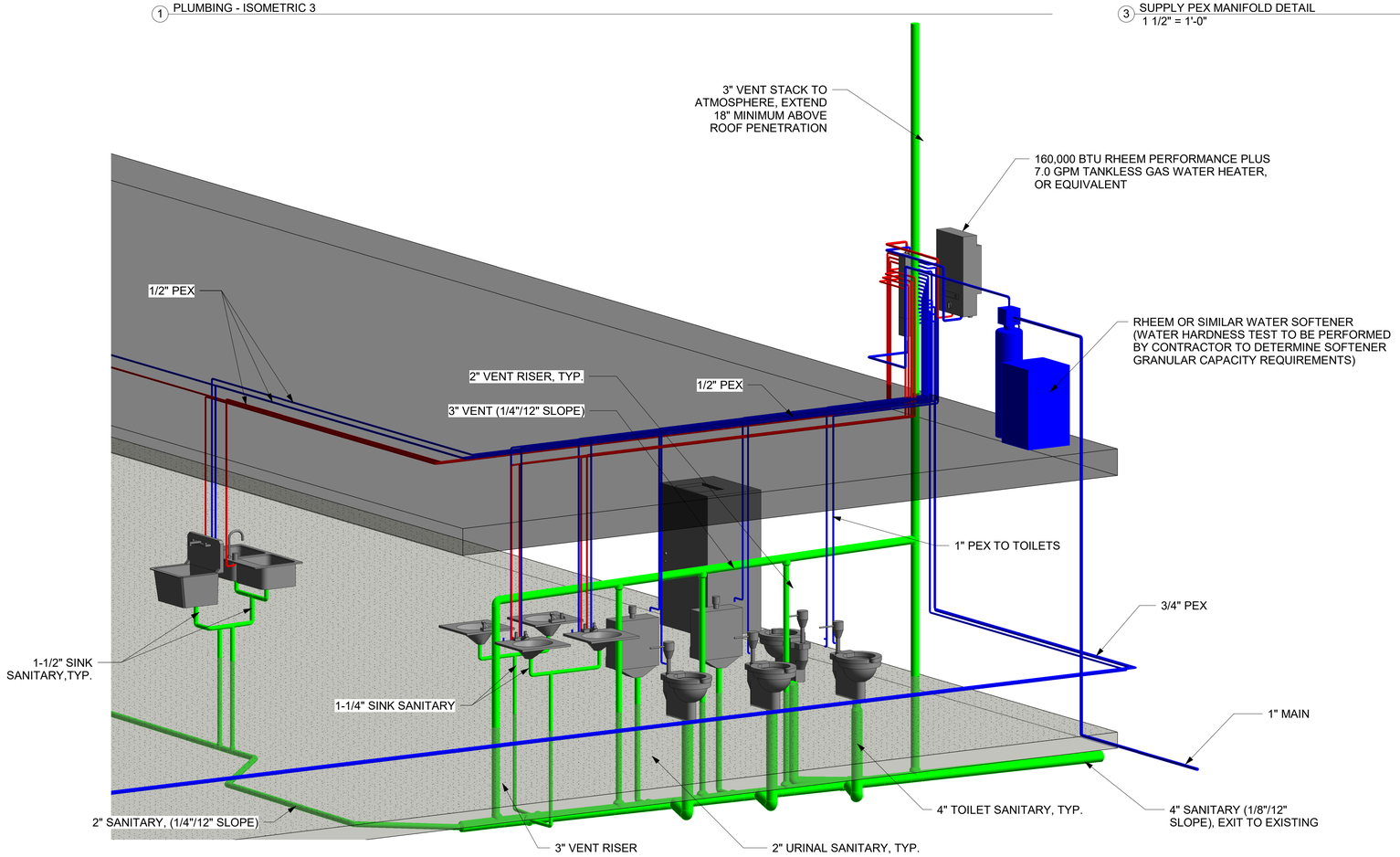

2 PLUMBING - ISOMETRIC 4

MSS Engineering, LLC
ENGINEERING, CONSULTING, & DESIGN
414 W 5th St., Auburn, IN 46706
Phone: (260) 267-7414
Email: tamcdaniel@mssengineer.com
Travis A. McDaniel, PE

TRAVIS A. McDANIEL REGISTERED PE11800805 STATE OF INDIANA PROFESSIONAL ENGINEER

Travis A. McDaniel
05/26/23

PROJECT LOCATION:
560 S 900 E
MARION, IN 46953

PROJECT NAME:
BID SPEC & DESIGN

DRAWING TITLE:
PLUMBING ISOMETRIC DETAILS

REVISIONS:

NO.	DATE	DESCRIPTION	BY

JOB NUMBER: 22.081.171

DRAWN BY: CAS

ENGINEERED BY: TAM

START DATE: 05/12/21

PROGRESS DATE: 07/13/21

CERTIFIED DATE: 05/26/23

SCALE: 1 1/2" = 1'-0"

PAGE NUMBER:

P03 OF P04 SHEETS

REV.

REV.

PLUMBING FIXTURE SCHEDULE

TYPE MARK	FIXTURE	DESCRIPTION	MANUFACTURER / MODEL	SAN/WASTE	VENT	COLD WATER	HOT WATER	REMARKS
L-1	LAVATORY	• BOWL - WALL HUNG, VITREOUS CHINA. • FAUCET - 4" CENTERSET FAUCET SHALL BE CAST BRASS CONSTRUCTION WITH ALL BRASS SHANK NUTS AND COUPLING NUTS. VANDAL RESISTANT WRIST-BLADE HANDLES, 0.5 GPM AERATOR, 14 TURN WASHERLESS CERAMIC DISC VALVE CARTIRIDGES. • SUPPLIES AND STOPS - LOOSE KEY ANGLE STOPS, 3/8" IPS CHROME PLATED INLET, 3/8" O.D. FLEXIBLE STEEL RISERS, WALL ESCUTCHEON. • TRAP 1-1/4" x 1-1/2" CAST BRASS, CHROME PLATED, WITH ADJUSTABLE GLEANOUT PLUG, TUBING TO WALL AND ESCUTCHEON. • DRAINS: -LAVATORY DRAIN OUTLET FITTING WITH PERFORATED GRID, CHROME PLATED FINISH AND CAST BRASS BODY.	• SINK - AMERICAN STANDARD "DECORUM" MODEL 9024004EC.020 • FAUCET - AMERICAN STANDARD "MONTERREY" MODEL 6055.205 • SUPPLIES AND STOPS - WOLVERINE BRASS INC. MODEL ENCORE; T&S BRASS • TRAP - WOLVERINE BRASS INC.; T&S BRASS	1-1/4"	2"	1/2"	1/2"	MOUNT TO MEET ADA REQUIREMENTS
S-1	KITCHEN SINK	• SINK - 33"X22", DUAL MOUNT, STAINLESS STEEL, 3-HOLE, DOUBLE BOWL • FAUCET - 8" CENTERSET FAUCET SHALL BE CAST BRASS CONSTRUCTION WITH ALL BRASS SHANK NUTS AND COUPLING NUTS. VANDAL RESISTANT WRIST-BLADE HANDLES, 1.5 GPM AERATOR, 14 TURN WASHERLESS CERAMIC DISC VALVE CARTIRIDGES. • SUPPLIES AND STOPS - LOOSE KEY ANGLE STOPS, 3/8" IPS CHROME PLATED INLET, 3/8" O.D. FLEXIBLE STEEL RISERS, WALL ESCUTCHEON. • TRAP 1-1/4" x 1-1/2" CAST BRASS, CHROME PLATED, WITH ADJUSTABLE GLEANOUT PLUG, TUBING TO WALL AND ESCUTCHEON. • DRAINS - X" WASTE DRAIN VALVE W/ TWIST HANDLE CHROME PLATED FINISH AND CAST BRASS BODY.	• SINK - AMERICAN STANDARD "COLONY" MODEL 22DB.6332283S.075 • FAUCET - AMERICAN STANDARD "MONTERREY" MODEL 6409170.002 • SUPPLIES AND STOPS - WOLVERINE BRASS INC. MODEL ENCORE; T&S BRASS • TRAP - WOLVERINE BRASS INC.; T&S BRASS • DRAIN - KINGSTON BRASS MODEL NO KBS1001	1-1/2"	2"	1/2"	1/2"	
S-2	UTILITY SINK	• 17" WALL MOUNTED SINGLE BASIN STAINLESS STEEL UTILITY SINK W/ 1.5 GPM KITCHEN FAUCET AND BASKET STRAINER	• SINK - ELKAY MODEL NO. SEHS-17X	1-1/2"	2"	1/2"	1/2"	
UR-1	URINAL	• URINAL, WALL HUNG, VITREQUS CHINA, WASHDOWN FLUSH ACTION 0.125 GAL PER FLUSH, EXTENDED SIDES FOR PRIVACY. INTEGRAL FLUSH SPREADER, OPEN TRAP. WALL HANGER, 2" OUTLET, CONNECTING FLANGE WITH GASKET AND BOLTS, 3/4" TOP SPUD. • FLUSH VALVE - QUIET EXPOSED, DIAPHRAGM TYPE, CHROME PLATED FLUSHOMETER WITH POLISHED EXTERIOR. NON-HOLD-OPEN AND NO LEAK HANDLE, HIGH BACK PRESSURE VACUUM BREAKER, HEX COUPLING NUT AND ADJUSTABLE TAILPIECE, SPUD COPULING AND FLANGE FOR TOP SPUID CONNECTION. INCLUDES SWEAT SOLDER KIT, VANDAL RESISTANT STOP CAP, AND CAST WALL FLANGE.	• AMERICAN STANDARD MODEL 6590.001 • 0.125 GPF FLUSH VALVE - AMERICAN STANDARD MODEL 6045.013	2"	2"	3/4"	--	
WC-1	WATER CLOSET	• BOWL - VITREOUS CHINA, WHITE, ELONGATED, SIPHON JET, WALL HUNG, 1-1/2" TOP SPUD, LOW WATER CONSUMPTION (1.6 GPF/6.0 LPF). • FLUSH VALVE - QUIET EXPOSED, DIAPHRAGM TYPE, CHROME PLATED FLUSHOMETER WITH METAL OSCILLATING NON-HOLD-OPEN HANDLE, 1" I.P.S. SCREWORIVER BACK-CHECK ANGLE STOP, VANDAL RESISTANT STOP CAP, ADJUSTABLE TAILPIECE, VACUUM BREAKER FLUSH CONNECTION, SPUD COUPLING, WALL AND SPUD FLANGES FOR 1-1/2" TOP SPUD. • SEAT - WHITE HIGH IMPACT, EXTRA HEAVY SOLID PLASTIC, OPEN FRONT, ELONGATED, CHEMICAL RESISTANT. (LESS COVER), MODEL-IN SURFACE CHECK AND STAINLESS STEEL HINGE POSTS. CARRIER - BOLTED TYPE CLOSET FITTING, ADJUSTABLE SHORT FOOT WITH BEARING PLATE, SIZE AND TYPE AS REQUIRED.	• BOWL - AMERICAN STANDARD "MADERA FLOWISE" MODEL NO. 2234.001; KOHLER; CRANE; MANSFIELD; BRIGGS • FLUSH VALVE - AMERICAN STANDARD "LESS EVERCLEAN" MODEL 6047.121 LOW CONSUMPTION (1.28GPF/6.0 LPF); DELANY; SLOAN. • SEAT - BEMIS "ELONGATED OPEN FRONT" MODEL 1955CT; JAY R. SMITH; BENEKE; CENTOCO; SPERGEL. • CARRIER - JAY R. SMITH; ZURN; WADE; JOSAM	4"	2"	1"	--	HARDLINE BEFORE MANIFOLD
WC-2	WATER CLOSET	• BOWL - VITREOUS CHINA, WHITE, ELONGATED, SIPHON JET, WALL HUNG, 1-1/2" TOP SPUD, LOW WATER CONSUMPTION (1.6 GPF/6.0 LPF). • FLUSH VALVE - QUIET EXPOSED, DIAPHRAGM TYPE, CHROME PLATED FLUSHOMETER WITH METAL OSCILLATING NON-HOLD-OPEN HANDLE, 1" I.P.S. SCREWORIVER BACK-CHECK ANGLE STOP, VANDAL RESISTANT STOP CAP, ADJUSTABLE TAILPIECE, VACUUM BREAKER FLUSH CONNECTION, SPUD COUPLING, WALL AND SPUD FLANGES FOR 1-1/2" TOP SPUD. • SEAT - WHITE HIGH IMPACT, EXTRA HEAVY SOLID PLASTIC, OPEN FRONT, ELONGATED, CHEMICAL RESISTANT. (LESS COVER), MODEL-IN SURFACE CHECK AND STAINLESS STEEL HINGE POSTS. CARRIER - BOLTED TYPE CLOSET FITTING, ADJUSTABLE SHORT FOOT WITH BEARING PLATE, SIZE AND TYPE AS REQUIRED.	• BOWL - AMERICAN STANDARD "MADERA FLOWISE" MODEL NO. 2234.001; KOHLER; CRANE; MANSFIELD; BRIGGS • FLUSH VALVE - AMERICAN STANDARD "LESS EVERCLEAN" MODEL 6047.121 LOW CONSUMPTION (1.28GPF/6.0 LPF); DELANY; SLOAN. • SEAT - BEMIS "ELONGATED OPEN FRONT" MODEL 1955CT; JAY R. SMITH; BENEKE; CENTOCO; SPERGEL. • CARRIER - JAY R. SMITH; ZURN; WADE; JOSAM	4"	2"	1"	--	MOUNT TO MEET ADA REQUIREMENTS HARDLINE BEFORE MANIFOLD
HB-1	HOSE BIB	• CONCEALED BOX TYPE FREEZELESS WALL HYDRANT, AUTOMATIC DRAINING, ANTI-SIPHON VACUUM BREAKER WITH 3/4" FNPT, LOOSE TEE KEY, CHROME PLATED EXTERIOR FINISH.	• WATTS MODEL HY 430	--	--	3/4"	--	MOUNT 24" ABOVE GRADE
TD-1	TRENCH DRAIN	• 4" PRECAST TRENCH DRAIN, FIBER REINFORCED POLYMER TRENCH DRAIN MATERIAL, STEEL PER ASTM A-36 FRAME MATERIAL, HOT DIP GALVANIZED FRAME COATING, 0.5% SLOPE (TYP.)	• DURA TRENCH MODEL NO.DTPF4-HDGS08ZSA	4"	--	--	--	
OT-1	OIL SAND SEPERATOR	• 3" PLAIN END VENTS, MAX FLOW RATE 314 GPM, LIQUID CAPACITY 560 GALLONS, OIL CAPACITY 285 GALLONS, SOLIDS/SEDIMENT CAPACITY 162 GALLONS, UNIT WEIGHT W/ STANDARD COVERS 1000 LBS, MAXIMUM OPERATING TEMPERATURE 140°F	• STRIEM OIL TANKER MODEL OT-500	4"	--	--	--	

MSS Engineering, LLC
ENGINEERING, CONSULTING, & DESIGN
414 W 5th St., Auburn, IN 46706
Phone: (260) 267-7414
Email: tamcdaniel@mssengineer.com
Travis A. McDaniel, PE

TRAVIS A. McDANIEL
REGISTERED
PE11800805
STATE OF INDIANA
PROFESSIONAL ENGINEER

Travis A. McDaniel
05/26/23

PROJECT LOCATION:
560 S 900 E
MARION, IN 46953

PROJECT NAME:
BID SPEC & DESIGN

DRAWING TITLE:
PLUMBING FIXTURE SCHEDULE

REVISIONS:

NO.	DATE	DESCRIPTION	BY

JOB NUMBER: 22.081.171

DRAWN BY: CAS

ENGINEERED BY: TAM

START DATE: 05/12/21

PROGRESS DATE: 07/13/21

CERTIFIED DATE: 05/26/23

SCALE:

PAGE NUMBER:

P04 OF P04 SHEETS

REV.

REV.

ELECTRICAL GENERAL NOTES:

1. THE ELCTRICAL CONTRACTOR SHALL VERIFY EXISTING POWER SOURCE AND PROVIDE ALL MATERIALS AND LABOR AND PAY ALL COST TO PROVIDE COMPLETE ELECTRICAL POWER TO THE NEW BUILDING FROM THE POWER SOURCE.
2. ALL ELECTRICAL WORK SHALL BE PERFORMED IN STRICT ACCORDANCE WITH THE IBC, NFPA 70 (INDIANA ELECTRIC CODE - IEC), LATEST EDITION, WITH ADOPTED STATE AMENDMENTS. ALL WORK PERFORMED SHALL BE DONE SO IN A GOOD WORKMANSHIP TYPE MANOR AND IN ACCORDANCE WITH ALL LOCAL CODES AND INSPECTIONS.
3. NO CIRCUIT OR FEEDER SHALL EXCEED 3% VOLTAGE DROP.
4. ANY CONDUCTORS RUNNING UNDERGROUND (SERVICE, FEEDERS, BRANCH CIRCUITS, ETC.) TO HAVE "WET LOCATION" RATING IN ACCORDANCE WITH THE REQUIREMENTS OF THE NEC, SECTION 310-8.
5. ALL WIRING SHALL BE IN EMT CONDUIT WHERE EXPOSED & MC WHERE CONSEALED, 100% COPPER, UNLESS OTHERWISE NOTED ON THE DRAWINGS. WIRES SHALL BE SIZED ACCORDINGLY TO THE NEC ARTICLE 310-15.
6. SPLICES SHALL BE MADE ONLY AT ACCESSIBLE LOCATIONS, OUTLET BOXES, PANELBOARDS, JUNCTION BOXES, ETC. TERMINAL CONNECTIONS AND SPLICES IN ALL WIRE #6 AND LARGER SHALL BE MADE WITH APPROVED SOLDERLESS CONNECTORS, PROPERLY INSULATED AND TAPED WHERE NECESSARY. IN SMALLER WIRES ALL SPLICES SHALL BE MADE WITH EITHER APPROVED SOLDERLESS CONNECTORS OR SHALL BE SOLDERED AND TAPED AS REQUIRED TO INSURE PROPER INSULATION.
7. ELECTRICAL BOXES AND FITTINGS SHALL COMPLY WITH UL STANDARD #50, 514-SERIES AND 886 AND NEMA STANDARDS PUBLICATIONS #051, 052 AND PUBLICATION 250.
8. WIRING DEVICES SHALL COMPLY WITH NEC, UL 20, 486A, 498 AND 943, IEEE STANDARD 241 AND NEMA STANDARDS PUBLICATION NO. WD1, WD2 AND WD5.
9. RECEPTACLES SHALL BE GENERAL DUTY TYPE, 2-POLE, 3-WIRE, GROUNDED, 20 AMPS, 125 VOLTS. RECEPTACLES SHALL BE INSTALLED 18" ABOVE FINISH FLOOR, UNLESS OTHERWISE NOTED.
10. SWITCHES SHALL BE GENERAL DUTY, 20 AMPS, 120-277 VOLTS.
11. FIXTURE SUPPORTS SHALL BE PROVIDED IN ACCORDANCE WITH THE REQUIREMENTS OF THE NEC, ARTICLE 700.
12. ALL EQUIPMENT SHALL BEAR THE UL LABEL AND BE INSTALLED ACCORDING TO THE LATEST EDITION OF THE NEC.
13. SERVICE EQUIPMENT SHALL BE SUITABLE FOR SHORT-CIRCUIT CURRENT AVAILABLE AT ITS SUPPLYTERMINALS AS PER NEC ARTICLE 230-90.
14. LIGHTING FIXTURES SHALL COMPLY WITH NEC, NEMA, UL AND IES (APPLICABLE ARTICLES).
15. EMERGENCY MEANS OF EGRESS LIGHTING WITH BATTERY BACKUP POWER SHALL PROVIDE EMERGENCY ILLUMINATION FOR A DURATION OF NOT LESS THAN 1.5 HOURS MINIMUM, WITHOUT THE VOLTAGE APPLIED TO THE LOAD FALLING BELOW 87.5% OF NORMAL. LOCAL AUTHORITY SHALL FIELD VERIFY AND LOCATE ADDITIONAL FIXTURES IF NEEDED.
16. PROVIDE MANUFACTURER'S RECOMMENDED LAMPS FOR ALL FIXTURES AND CLEAN AND REPLACE BURNED OUT LAMPS AT SUBSTANTIAL COMPLETION.
17. ELECTRICAL DEVICES SUCH AS SWITCHES, RECEPTACLES, ETC. THAT PENETRATE A FIREWALL, MUST BE IN ACCORDANCE WITH SECTION 711 OF THE IBC.
18. ALL DISCONNECTS AND CIRCUIT BREAKERS SHALL BE MARKED FOR IDENTIFICATION.
19. OPERATING HANDLE OF THE SWITCH OR CIRCUIT BREAKER, WHEN IN ITS HIGHEST POSITION, WILL NOT BE MORE THAN 6'-7" ABOVE THE FINISH FLOOR OR PLATFORM.
20. PROVIDE A BONDING JUMPER AT THE WATER METER AND AT WATER HEATER.
21. THE ELECTRICAL CONTRACTOR WILL PROVIDE DESIGN NUMBER AND MANUFACTURER'S CUT SHEETS TO THE LOCAL BUILDING DEPARTMENT WHEN WIRING METHODS, WHICH WILL PENETRATE THROUGH FIRE RESISTANT RATED WALLS, PARTITIONS, FLOORS, OR CEILINGS, AND INCLUDE APPROVED METHODS TO MAINTAIN THE RESISTANCE RATING.
22. THE ELECTRICAL CONTRACTOR WILL NEED TO PROVIDE MANUFACTURER'S ELECTRICAL FIXTURE CUT SHEETS TO THE LOCAL BUILDING DEPARTMENT, IF REQUIRED.
23. WP = WEATHER PROOF COVERS TO BE TYPE THAT REMAIN WATERTIGHT WHILE A CORD IS PLUGGED IN.
24. THE EMERGENCY EXIT AND LIGHTING PACKS NEED TO BE TAKEN OFF THE LOCAL LIGHTING CIRCUIT AHEAD OF THE LOCAL SWITCHING CIRCUIT. NEC ART. 700.12(F) THIS MUST BE NOTED IN THE NOTES AND/OR PLAN. THE EMERGENCY CIRCUIT THAT IS SHOWN GOING TO A DEDICATED BREAKER IS ONLY ALLOWED BY THE EXCEPTION IF THREE (3) OR MORE LIGHTING CIRCUITS ARE IN THE SAME AREA AND THE BREAKERS ARE LOCKED ON.
25. EXIT SIGNS DO NOT EXCEED 5 WATTS PER FACE
26. BUILDING TO HAVE AUTOMATIC CONTROLS TO SHUT OFF ALL BUILDING LIGHTING.
27. AUTOMATIC LIGHTING CONTROLS FOR EXTERIOR LIGHTING INSTALLED.
28. INDEPENDENT LIGIHTING CONTROLS INSTALLED PER APPROVED LIGHTING PLANS AND ALL MANUAL CONTROLS READILY ACCESSIBLE AND VISIBLE TO OCCUPANTS.
29. SEPERATE LIGHTING CONTROL DEVICES FOR SPECIFIC USES INSTALLED PER APPROVED LIGHTING PLANS.
30. BALLASTED ONE AND THREE LAMP FIXTURES WITH >=30 W/LAMP HAVE TWO LAMP TANDEM WIRED BALLASTS WHEN >=2 FIXTURES IN THE SAME SPACE ON SAME CONTROL.
31. FURNISHED AS BUILT DRAWINGS FOR ELECTRICAL POWER SYSTEMS WITHIN 30 DAYS OF SYSTEM ACCEPTANCE.
32. FURNISHED O&M INSTRUCTIONS FOR SYSTEMS AND EQUIPMENT TO THE BUILDING OWNER OR DESIGNATED REPRESENTATIVE.
33. ADDITIONAL INTERIOR LIGHTING POWER ALLOWED FOR SPECIAL FUNCTIONS PER THE APPROVED LIGHTING PLANS AND IS AUTOMATICALLY CONTROLLED AND SEPERATED FROM GENERAL LIGHTING.
34. EXTERIOR GROUNDS LIGHTING OVER 100W PROVIDES >60 LM/W UNLESS ON MOTION SENSOR OR FIXTURE IS EXEMPT FROM SCOPE OF CODE OR FROM EXTERNAL LPD.

MECHANICAL GENERAL NOTES:

1. MECHANICAL CONTRACTOR TO FURNISH ALL LABOR, MATERIAL, AND EQUIPMENT REQUIRED FOR THE COMPLETION AND OPERATION ON ALL SYSTEMS IN THIS SECTION OF WORK. ALL MECHANICAL WORK SHALL BE IN STRICT ACCORDANCE WITH INTERNATIONAL MECHANICAL CODE (IMC), LATEST EDITION INCLUDING ADOPTED INDIANA AMENDMENTS, ASHRAE, SMACNA, NFPA, AND EPA. THE APPLICABLE PORTIONS OF THE SPECIFICATIONS ARE INCLUDED AS PART OF THIS SPECIFICATION. ALL INSTALLATIONS SHALL BE PERFORMED IN A GOOD WORKMANLIKE MANNER.
2. ALL EQUIPMENT, PIPING, VENTS, ETC., EXTENDING THROUGH WALLS & ROOF SHALL BE FLASHED, COUNTER FLASHED IN A WATERPROOF MANNER.
3. ALL HVAC EQUIPMENT TO BE INSULATED PER MANUFACTURERS REQUIREMENTS.
4. MAINTAIN MINIMUM 10' BETWEEN OUTDOOR AIR INTAKES AND EXHAUST FAN DISCHARGE, PLUMBING, VENT, ETC.
5. ALL CONTROL WIRING & CONDUIT SHALL COMPLY WITH NEC.
6. DO NOT SCALE DRAWINGS.
7. CONTRACTOR SHALL VISIT THE JOB SITE AND BE FAMILIAR WITH ALL PROJECT CONDITIONS PRIOR TO FABRICATING ANY EQUIPMENT, ETC. NO ALLOWANCES WILL BE MADE FOR CONTRACTOR UNFAMILIARITY WITH PROJECT CONDITIONS.
8. OUTDOOR AIR AND EXHAUST SYSTEMS HAVE MOTORIZED DAMPERS THAT AUTOMATICALLY SHUT WHEN NOT IN USE AND MEET MAXIMUM LEAKAGE RATES. CHECK GRAVITY DAMPERS ARE ALLOWED.
9. INSULATION EXPOSED TO WEATHER PROTECTED FROM DAMAGE. INSULATION OUTSIDE OF THE CONDITIONED SPACE AND ASSOCIATED WITH COOLING SYSTEMS IS VAPOR RETARDANT.
10. FURNISHED HVAC AS-BUILT DRAWINGS SUBMITTED WITHIN 90 DAYS OF SYSTEM ACCEPTANCE.
11. FURNISHED O&M MANUALS FOR HVAC SYSTEMS WITHIN 90 DAYS OF SYSTEM ACCEPTANCE.
12. AN AIR AND/OR HYDRONIC SYSTEM BALANCING REPORT TO BE PROVIDED FOR HVAC SYSTEMS SERVING ZONES >5,000FT2 OF CONDITIONED AREA.
13. HVAC CONTROL SYSTEMS HAVE BEEN TESTED TO ENSURE PROPER OPERATION, CALIBRATION AND ADJUSTMENT OF CONTROLS.

SYSTEM OPERATING NOTES:

1. DUCTWORK OPERATING >3" W.C. REQUIRES LEAK TESTING
2. GAS FURNACE TO BE 80% EFFICIENT OR BETTER
3. VENTILATION FANS >0.75 hp SHALL HAVE AUTOMATIC CONTROLS TO SHUT OFF FAN WHEN NOT REQUIRED.
4. DUCTS & PLENUMS SHALL BE SEALED USING APPROVED MEASURES DEPENDENT ON MEASURED STATIC PRESSURE AND APPLICATION.
5. HEATING TO EACH ZONE IS CONTROLLED BY A THERMOSTAT CONTROL.
6. THERMOSTAT CONTROLS SHALL HAVE A 5°F DEADBAND
7. TEMPERATURE CONTROLS SHALL HAVE SETPOINT OVERLAP RESTRICTIONS WHERE NECESSARY.
8. HVAC SYSTEM SHALL BE EQUIPPED W/ AT LEAST (1) AUTOMATIC SHUTDOWN CONTROL.
9. SETBACK CONTROLS SHALL ALLOW FOR AUTOMATIC RESTART AND TEMPERARY OPERATION AS REQUIRED FOR MAINTENANCE.
10. HUMIDIFICATION AND DEHUMIDIFACTION SHALL NOT BE SET TO ALLOW FOR SIMUTANEOUS OPERATION.
11. OUTDOOR AIR AND EXHAUST SYSTEMS HAVE MOTORIZED DAMPERS THAT AUTOMATICALLY SHUT WHEN NOT IN USE AND MEET MAXIMUM LEAKAGE RATES. CHECK GRAVITY DAMPERS ARE ALLOWED.
12. DEMAND CONTROL VENTILATION PROVIDED FOR SPACES >500FT2 AND >40 PEOPLE/1000FT2 OCCUPANT DENSITY AND SERVED BY SYSTEMS WITH AIR SIDE ECONOMIZER, AUTO MODULATING OUTSIDE AIR DAMPER CONTROL, OR DESIGN AIRFLOW >3000 CFM.
13. DEHUMIDIFICATION CONTROLS PROVIDED TO PREVENT REHEATING, RECOOLING, MIXING OF HOT AND COLD AIRSTREAMS OR CONCURRENT HEATING AND COOLING OF THE SAME AIRSTREAM.

PLUMBING GENERAL NOTES:

1. PLUMBING SYSTEM INSTALLATION SHALL FOLLOW ALL STATE AND LOCAL CODE IN ADDITION TO THE INTERNATIONAL BUILDING CODE (IBC), INTERNATIONAL PLUMBING CODE (IPC), AND GOOD WORKMANSHIP BY A LICENSED PROFESSIONAL.
2. SERVICE HOT WATER PIPING SYSTEMS TO BE INSULATED. WHERE PIPING IS INSTALLED UNDER A SLAB, VERIFICATION MAY NEED TO OCCUR DURING FOUNDATION INSPECTION.
3. TEMPERATURE CONTROLS INSTALLED ON SERVICE WATER HEATING SYSTEMS (<=120°F TO MAXIMUM TEMPERATURE FOR INTENDED USE).
4. HEAT TRAPS INSTALLED ON NON-CIRCULATING STORAGE WATER TANKS.
5. PUBLIC LAVATORY FAUCET WATER TEMPERATURE <=110°F.

SANITARY NOTES:

1. WHEREVER A HORIZONTAL DRAINAGE PIPE, A BUILDING DRAIN, OR A BUILDING SEWER CHANGES DIRECTION, A JOINT NO MORE THAN 45° SHALL BE USED.
2. ALL FIXTURES SHALL BE EQUIPT WITH A P-TRAP.
3. ALL SANITARY LINES SHALL BE NON-PRESSURIZED SANITARY PVC OR BETTER.

PER IBC 2308.10.4.2 - NOTCHES AND HOELS

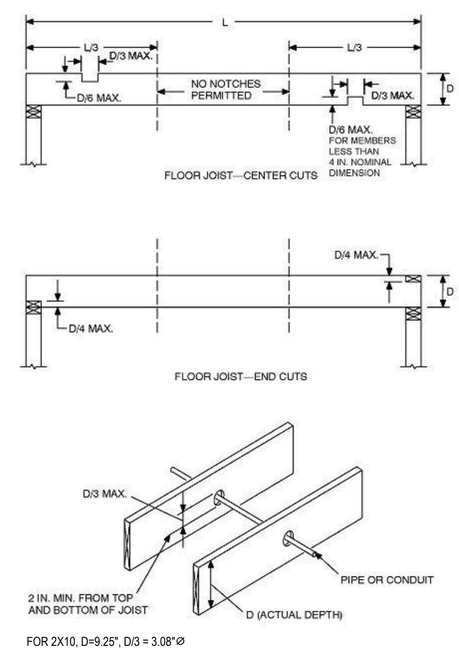

FOR 2X10, D=9.25", D/3 = 3.08"Ø

MSS Engineering, LLC
ENGINEERING, CONSULTING, & DESIGN
414 W 5th St., Auburn, IN 46706
Phone: (260) 267-7414
Email: tamcdaniel@mssengineer.com
Travis A. McDaniel, PE

TRAVIS A. McDANIEL REGISTERED PE11800805 STATE OF INDIANA PROFESSIONAL ENGINEER

Travis A. McDaniel 05/26/23

PROJECT LOCATION: 560 S 900 E MARION, IN 46953

PROJECT NAME: BID SPEC & DESIGN

DRAWING TITLE: MEP NOTES

REVISIONS:

NO.	DATE	DESCRIPTION	BY

JOB NUMBER: 22.081.171

DRAWN BY: CAS

ENGINEERED BY: TAM

START DATE: 05/12/21

PROGRESS DATE: 7/13/21

CERTIFIED DATE: 05/26/23

SCALE:

PAGE NUMBER:

G01 OF G01 SHEETS

REV.