SUBDIVISION AND LAND DEVELOPMENT ORDINANCE

TOWNSHIP OF HOPEWELL
HUNTINGDON COUNTY

/ - , 1993

TABLE OF CONTENTS

ARTICLE I - GENERAL PROVISIONS

Section 100. Short Title 1
Section 101. Authority 1
Section 102. Purpose 1
Section 103. Establishment of Controls 1

ARTICLE II - DEFINITIONS

Section 200. Language Interpretations. 3
Section 201. Definitions 3

ARTICLE III - FEES AND SECURITIES

Section 300. Fees, Inprovements, Maintenance Guarantees and Securities. 12

ARTICLE IV - SUBDIVISION APPLICATION PROCEDURE AND APPROVAL PROCESS

Section 400. General 14
Section 401. Pre-Application Sketch Plan Conference. 14
Section 402. Preliminary Review of the Plan. 15
Section 403. Review of the Plan for Final Approval 18
Section 404. Record Plan 20
Section 405. Minor Subdivision 20

ARTICLE V - PLAN REQUIREMENTS

Section 500. Plan Contents. Preliminary Review. 21
Section 501. Plan Contents. Final Review. 24
Section 502. Record Plan Contents. 24

ARTICLE VI - DESIGN AND IMPROVEMENTS

Section 600. General Requirements. 25
Section 601. Streets 25
Section 602. Easements 32
Section 603. Lots. 33
Section 604. Building Lines Set Back 34
Section 605. Public Grounds and Open Spaces. 34
Section 606. Storm Drainage. 35
Section 607. Sewage Disposal and Water Supply. 38
Section 608. Utility Location. 39
Section 609. Erosion and Sedimentation Control 39
Section 610. Grading and Drainage. 40
Section 611. Monuments and Markers 40
Section 612. Private Driveways 41
Section 613. Sidewalks 41
Section 614. Floodplain Design Standards 41
Section 615. Steep Slope Requirements. 41

ARTICLE VII - PENALTIES, AMENDMENTS, SEVERABILITY, REPEALER AND EFFECTIVE DATE

Section 700. Penalties 42
Section 701. Amendments. 42
Section 702. Severability. 42
Section 703. Repealer. 43
Section 704. Effective Date. 43

EXHIBITS:

Exhibit 601 F (4)(b) . . . . . End of Ordinance
Exhibit 601 F (4)(c) . . . . . End of Ordinance

FORMS:

Sample Form for Application for Any Subdivision . . . . . End of Ordinance

ARTICLE I

GENERAL PROVISIONS

SECTION 100. SHORT TITLE

This Ordinance shall be known, and may be cited, as the "Hopewell Township Subdivision and Land Development Ordinance."

SECTION 101. AUTHORITY

This Ordinance is enacted and ordained under the grant of powers by the General Assembly of the Commonwealth of Pennsylvania, "The Pennsylvania Municipalities Planning Code," Act 247 of 1968, July 31, P.L. 805, as amended (53 P.S. 10101).

SECTION 102. PURPOSE

This Ordinance is enacted to protect and provide for the health, safety, and general welfare of Hopewell Township, including:

A. The future growth and development;

B. The establishing of reasonable procedures for subdivision review;

C. To provide and make public policy in order to provide adequate and efficient transportation, water and sewage;

D. To minimize pollution of water ways;

SECTION 103: ESTABLISHMENT OF CONTROLS

In their interpretation and application, the regulations set by this Ordinance shall be held to be the minimum requirements adopted for the promotion of the purpose of this Ordinance.

A. Types of Control

This Ordinance contains regulations governing the following: submission procedures for the review and disposition of subdivision and land development plans; graphic and written information to be written on, or filed with, such plans; and regulations governing the design and installation of required improvements, the layout and arrangement of lots and blocks, the reservation of land for public uses, and the methods of handling storm drainage and erosion and sedimentation control measures.

B. Any Subdivision and Land Developments

(1) No subdivision or land development of any lot, tract, or parcel of land shall be made, no street, sewage disposal system, storm sewer, water main or other improvements in connection therewith shall be laid out, constructed, opened or dedicated for public use or travel or for the common use or use of occupants of buildings abutting thereon, except in accordance with the provisions of this Ordinance.

(2) This Ordinance shall apply to any subdivision or land development which occurred without obtaining approval required under this subdivision ordinance for all improvements not completed.

C. Relationship With Other Restrictions

The provisions of this Ordinance are intended to abrogate or annul other rules, regulations, or ordinances provided where this Ordinance imposes a greater restriction.

D. Exemptions

This Ordinance shall not apply to any subdivision or land development exempted by the Pennsylvania Municipalities Planning Code or other laws of the Commonwealth of Pennsylvania.

ARTICLE II

DEFINITIONS

SECTION 200. LANGUAGE INTERPRETATIONS

A. Words used in the present tense include the future tense; the singular number includes the plural and plural number includes the singular; words of masculine gender include feminine gender and words of feminine gender include masculine gender.

B. The word "includes" or "including" shall not limit the term to the specific example, but is intended to extend its meaning to all other instances of like kind and character.

C. The word "person" includes an individual, firm, association, organization, partnership, trust, company, corporation or any other similar entity.

D. The words "shall" and "must" are mandatory; the words "may" and "should" are permissive.

E. The words "used" or "occupied" include the words "intended, designed, maintained or arrranged to be used or occupied."

SECTION 201. DEFINITIONS

Unless a contrary intention clearly appears, the following words and phrases shall have the meaning given in this section. All words and terms not defined herein or in the Municipalities Planning Code shall be used with a meaning of standard usage.

APPLICANT:

A landowner or developer, as hereinafter defined, who has filed an application for development including his heirs, successors, and assigns.

BERM:

That portion of a street lying on either side of the cartway between the edge thereof and the adjacent road ditch intended primarily for stopping and parking purposes.

BLOCK:

A tract of land bounded by streets or by a combination of streets and public parks, cemeteries, railroad rights-of-way, shorelines or watercourses or boundary lines of the County.

BOND:

Any form of security including a cash deposit, surety bond, collateral, property, or instrument of credit in an amount and form satisfactory to the Governing Body. All bonds shall be approved by the Governing Body whenever a bond is required by these regulations.

BUILDING:

A combination of materials to form a permanent structure having walls and a roof. Included shall be all mobile homes and trailers used for human habitation.

BUILDING LINE:

A line parallel to the front, side or rear lot line so as to provide the required yard or minimum distance between any building and the adjacent right-of-way.

CARTWAY:

The portion of a street right-of-way designed or intended for vehicular travel.

CENTERLINE:

A line running parellel to and equidistant from both sides of a street.

CLEAR SIGHT TRIANGLE:

An area of unobstructed vision at a street intersection defined by lines of sight between points at a given distance from the intersection of the street right-of-way lines.

COMMUNITY SEWAGE SYSTEM:

Any system whether publicly or privately owned, for the collection of sewage or industrial wastes of a liquid nature from two or more lots, and the treatment and/or disposal of the sewage or industrial waste on one or more of the lots or at any other site.

COMPREHENSIVE PLAN:

The Huntingdon County Comprehensive Plan.

COUNTY:

Shall mean the County of Huntingdon, Pennsylvania.

CUL-DE-SAC:

A street intersecting another street at one end and terminating in a vehicular turnaround at the other end.

CUT:

An excavation. The difference between a point on the original ground and a designated point of lower elevation on the final grade. Also, the material removed in excavation.

DEAD-END STREET:

A street with only one vehicular traffic outlet.

DEVELOPER:

Shall mean any landowner, agents of such landowner or tenant, with the permission of such landowner, who makes or causes to be made a subdivision of land or a land development.

DEVELOPMENT:

Any man-made change to improved or unimproved real estate, including but not limited to buildings or other structures, the placement of mobile homes, streets and other paving, utilities, mining, dredging, filling, grading, excavation or drilling operations and the subdivision of land.

DWELLING:

A building designed and constructed for residential purposes.

DWELLING UNIT:

Any structure, or part thereof, designed to be occupied as living quarters by a single housekeeping unit.

EASEMENT:

Authorization of a property owner for the use by another, and for a specified purpose, of any designated part of his property.

ELEVATION:

Height, in feet, of a point on the ground above sea level.

EROSION:

The removal of stone, soil or other surface materials by the action of natural elements.

EXCAVATION:

Any act by which earth, gravel, rock or any other similar material is dug into, cut, quarried, uncovered, removed, displaced, relocated or bulldozed and shall include the conditions resulting therefrom.

FILL:

Any act by which earth, sand, gravel, rock or any other material is placed, pushed, dumped, pulled, transported or moved to a new location above the natural surface of the ground or on top of the stripped surface and shall include the conditions resulting therefrom. The difference in elevation between a point on the original ground and a designated point of higher elevation on the final grade. The material used to make a fill.

FLOOD FRINGE:

The portion of the floodplain outside the floodway for which detailed hydrologic information is available.

FLOODPLAIN:

Any land area susceptible to being inundated by water from any source.

FLOODWAY:

The portion of the floodplain required to carry and discharge the flood waters of a given magnitude without increasing the water surface elevation more than (1) foot at any point. For the purpose of this Ordinance, the floodway shall be capable of accommodating a flood of the one hundred (100) year magnitude.

GOVERNING BODY:

Shall mean the Board of Supervisors of Hopewell Township, Huntingdon County, Pennsylvania.

GRADE:

The slope of ground, street or other public way specified in percentage of change in elevation per horizontal distance. The act of altering the topography of undisturbed land.

IMPROVEMENT:

Those physical additions and installations required to render land suitable for the use intended and including streets, curbs and gutters, sidewalks, street signs and lights, walkways, sewer, and water facilities, monuments and markers, shade trees, grading and storm water drainage facilities.

LAND DEVELOPMENT:

The improvement of one (1) lot or two (2) or more contiguous lots, tracts or parcels of land for any purpose involving (a) a group of two (2) or more buildings, or (b) the division or allocation of land or space between or among two (2) or more existing or prospective occupants by means of, or for the purpose of, streets, common areas, leaseholds, condominiums, building groups or other features, including a subdivision of land.

LICENSED ENGINEER/LAND SURVEYOR:

Licensed professional engineer or land surveyor registered by the Commonwealth of Pennsylvania.

LOT:

A portion, tract or parcel of land and/or watercourse considered as a unit, devoted to a certain use or occupied by a building or group of buildings that are united by a common interest of use or the customary accessory buildings and open spaces belonging to the same. An area of land or watercourse held in single ownership.

A. Double or Reverse Frontage:

A lot with front and rear street frontage; a lot extending between, and having frontage on, an arterial and a minor street.

LOT AREA:

The area contained within the property lines of the individual parcels of land as shown on the subdivision plan, excluding space within any street or alley right-of-way but including the area of any easement.

LOT LINE:

A boundary line of a lot, includes property line.

NORTH POINT:

An arrow on a plan depicting north.

ONE HUNDRED (100) YEAR FLOOD:

A flood that, on the average, is likely to occur once every one hundred (100) years (i.e. that has a one (1) percent chance of occurring each year, although the flood may occur in any year.)

ON-SITE SEWER SERVICE:

An approved sanitary sewage disposal system in which sewage is treated and discharged on the same lot which it serves.

PLANNING COMMISSION:

Shall mean the Hopewell Township Planning Commission, or in the absence of a Planning Commission, the Supervisors.

PLAN:

Shall mean the map or plat of a subdivision or land development whether sketch, preliminary, or final, according to Article III of this Ordinance.

PROJECT NARRATIVE:

1. Nature of development project. (Residential, Commercial, Institutional, Industrial, etc.). If the project is commercial, institutional or industrial describe the activity, such as light manufacturing, private hospital, or heavy manufacturing.

2. The approximate number of Lots or Equivalent Dwelling Units in the development project. Lots refer to single family residential dwellings. For commercial, industrial and institutional facilities the number of lots in a subdivision are determined through the use of Equivalent Dwelling Units.

3. Proposed sewage disposal method (municipal treatment facility, small flow, etc.) including description of collection and conveyance facilities, if applicable.

4. Total acreage of the proposed land development project.

5. Describe the use of any acreage or parcels under the same owner ship and adjacent to the property.

6. Proposed water supply.

7. Any other information that is relative to the project.

PUBLIC GROUNDS:

Includes (a) parks, playgrounds and other public areas; and (b) sites for schools, sewage treatment, refuse disposal and other publicly owned and operated facilities.

REGULATORY FLOOD ELEVATION:

The one hundred (100) year flood elevation plus a freeboard safety factor of one and one-half (1½) feet.

RIGHT-OF-WAY:

A corridor of land set aside for use, in whole or in part, by a street, walk, power line, pipeline, drainage course, or similar purpose.

RUNOFF:

The surface water discharge or rate of discharge of a given watershed after a fall of rain or snow that does not enter the soil but runs off the surface of land.

SEDIMENTATION:

The process by which mineral or organic matter is accumulated or deposited by moving wind, water or gravity. Once this matter has been deposited (or remains suspended in water) it is usually referred to as "sediment."

SIGHT DISTANCE:

The required length of cartway visible to the driver of a motor vehicle at any given point in the cartway when the view is unobstructed.

SKETCH PLAN:

An informal plan, preparatory to the preliminary plan (or final plan in the case of minor subdivisions) indicating prominent existing features of a tract and its surroundings and the general layout of the proposed subdivision.

SLOPE:

The fact of an embankment or cut section; any ground whose surface makes an angle with the plane of the horizon. Slopes are usually expressed in precentage based upon vertical distance in feet per one hundred (100) feet of horizontal distance.

SOIL STABILIZATION:

Chemical or structural treatment of a mass of soil to increase or maintain its stability or otherwise to improve its engineering properties.

STREET:

Street includes street, avenue, road, highway, lane, alley and any other ways used or intended to be used by vehicular traffic or pedestrians whether public or private and for the purposes of this Ordinance shall be classified as follows:

A. Arterial Streets are those which are used primarily for through, fast, or heavy traffic.

B. Collector Streets are those which carry traffic from minor streets to the major system of arterial streets, including principal entrance streets of a residential development and streets for major circulation within such developments.

C. Local Streets are any streets not classified as arterial or collector streets and include:

(1) Minor Streets are those which are used primarily for access to the abutting properties.

(2) Marginal Access Streets are minor streets which are parallel to and adjacent to arterial streets and which provide access to abutting properties and protection from through traffic.

(3) Alleys are minor ways which are used primarily for vehicular access to the back or side of properties otherwise abutting on a street.

STREET WIDTH:

The shortest distance between the lines delineating the right-of-way of a street.

SUBDIVIDER:

A person, partnership or corporation who or which owns land in the Township and for which a land subdivision application is filed and processed under the provisions of this Ordinance.

SUBDIVISION:

The division or redivision of a lot, tract or parcel of land by any means into two or more lots, tracts, parcels or other divisions of land, including changes in existing lot lines, for the purpose, whether immediate or future, of lease, transfer of ownership or building or lot development; provided, however, that the subdivision by lease of land for argicultural purposes only with no improvements into parcels of more than ten acres, not involving any new street or easement of access or residential dwelling shall be exempted. The definition of subdivision shall include the partitioning of land by any court for distribution to heirs or devisees.

A. MAJOR SUBDIVISIONS:

All subdivisions not classified as minor subdivisions, including, but not limited to, subdivisions involving:

(1) Six (6) or more lots;

(2) the installation of new streets, sanitary sewers, water mains, or other utilities whether immediate or future.

(3) Land development projects for commercial, institutional or industrial.

B. MINOR SUBDIVISIONS:

Any subdivision involving not more than five (5) lots, parcels, or other divisions of land which abut a local street as defined in this Ordinance, a street of sufficient width and does not require a new street, installation of sanitary sewers, storm sewers, water mains, pipes, or other facilities.

SWALE:

A low-lying stretch of land which gathers or carries surface water runoff.

TOPOGRAPHIC MAP:

Shall mean a map showing the elevations of the ground by contours or elevations.

TOP SOIL:

Surface soils and subsurface soils which presumably are fertile soils and soil material, ordinarily rich in organic matter or humus debris. Top soil is usually found in the uppermost soil layer called the "A Horizon".

TOWNSHIP ENGINEER:

The engineer of the Township of Hopewell being a duly registered professional engineer employed by the Township or engaged as a consultant thereto.

WATERCOURSE:

A permanent stream, intermittent stream, river, brook, creek, channel, or ditch for water whether natural or man-made.

ARTICLE III

FEES AND SECURITIES

SECTION 300: FEES, IMPROVEMENTS, MAINTENANCE GUARANTEES AND SECURITIES

The following fees shall be paid by the applicant to the Township (unless otherwise noted herein) at the specified times. All fees shall be in the form of cash or money order payable to Hopewell Township.

A. Improvements and Maintenance Guarantees

Before granting of preliminary approval of the plan the Board of Supervisors should require deposit of cash or other financial security in an amount sufficient to cover the cost of any improvements that may be required. The financial security may include:

(1) Cash

(2) Other acceptable forms of contractual obligation to be proposed by the subdivider to pledge payment for costs incurred.

NOTE: All alternative proposals other than cash will be reviewed by the Board of Supervisors in conjunction with their engineer and solicitor and the said Board of Supervisors reserve the right to reject part of or the total proposal and make counter proposals.

B. Fees for Filing and Processing of Plans

(1) Minor Subdivisions: Fifty ($50.00) Dollars plus Five ($5.00) Dollars for each lot.

(2) Major Subdivisions: One Hundred Fifty ($150.00) Dollars plus Five ($5.00) Dollars for each lot.

(3) Review Fees: In an amount estimated by the Township to cover such costs as:

(a) Reviewing the plan for conformance to the provisions of the codes and ordinances of the municipality;

(b) site inspections for conformance to survey; and

(c) preparing cost estimates of required improvements;

(4) Engineer Fee: Such fee shall be sufficient to cover the costs of all necessary engineering reviews.

(5) Solicitor Fee: Such fee shall be sufficient to cover the costs of all necessary reviews by the solicitor.

(6) Failure to pay such fee after notification of costs and within ten (10) days of plan submission shall constitute grounds for denial of preliminary plan approval.

(7) County Review Fee: In the amount specified by the County in the form of a certified check or money order payable to Huntingdon County submitted with the preliminary plan.

ARTICLE IV

SUBDIVISION APPLICATION PROCEDURE AND APPROVAL PROCESS

SECTION: 400. GENERAL

Tentative subdivision and land development plans shall be reviewed by the Hopewell Township Planning Commission and the Huntingdon County Planning Commission and shall be approved or not approved by the Hopewell Township Board of Supervisors in accordance with the procedures specified in this Article. Unless specifically exempted, all plans shall be reviewed in stages as follows:

A. Minor Subdivisions

(1) Sketch Plan
(2) Final Subdivision Plan

B. Major Subdivision

(1) Sketch Plan
(2) Preliminary Plan
(3) Final Subdivision Plan
(4) Project Narrative (See definitions)

SECTION 401. PRE-APPLICATION SKETCH PLAN CONFERENCE

A potential applicant for subdivision or land development, all or part of which is situate in Hopewell Township, may request, and is encouraged to request, a conference with the Planning Commission for the purpose of discussing or reviewing such proposed subdivision or land development.

A. The pre-application conference shall not be mandatory and shall not be regarded as formal application for subdivision or land development. The filing of any report, sketch plan, plat or map prior to any such conference shall not constitute submission of a plan or application for land development or subdivision.

B. Any report, sketch plan, plat or map to be considered by the Planning Commission at such conference shall be provided by the potential applicant in five copies.

C. As a result of the pre-application conference, the Planning Commission may, at its sole discretion, make any suggestions or recommendations or inform the developer of any proposed plans or factors that may affect the development. Such review and discussion shall be informal and advisory only. Any such recommendations shall not be binding upon the Planning Commission in its review of the plan after formal application.

D. Requirments for Sketch Plan. A sketch plan should contain at least the following information:

(1) Transmittal letter documenting contents of information submitted;

(2) Location map;

(3) General information concerning any community facilities and/or other significant man-made or natural features that will affect the proposal;

(4) A property map at a scale of no smaller than 1" = 100' showing the proposed layout of streets and lots and other features of the subdivision;

(5) A preliminary soils report; and

(6) Project Narrative (See §201 Page 8 for definition and content)

SECTION 402. PRELIMINARY REVIEW OF THE PLAN

All applications for approval of subdivision and land development plans shall commence with the submission of a plan and all required supplementary data to the Township Secretary.

A. All applications for preliminary review of a plan shall be acted upon by the Township within 90 days of its receipt. The Township Supervisors shall notify the applicant in writing of their decision within 15 days of such action.

B. At any time during the review process the applicant may substitute an amended plan for that originally submitted solely for the purpose of correcting the original plan to the extent necessary to meet the requirements of this Ordinance.

C. A plan shall be deemed to have been submitted for preliminary review when the applicant has furnished to the Township Secretary the following documents:

(1) Five copies of a completed "Application for Preliminary Review for any Subdivision in Hopewell Township," plus payment of all application fees.

(2) Five black (or blue)-on white prints of the plan which shall comply with Section 400 of Article IV of this Ordinance;

(3) A copy of the appropriate completed "Planning Module for Land Development" as required by the Pennsylvania Department of

Environmental Resources (DER) and unless all building lots are to be served by a public sanitary sewer system, soil log and percolation test data for each lot;

(4) Five prints of the required street cross-section drawings and street profiles;

(5) Five copies of all other information required by this Ordinance but not included on the documents listed above; and

(6) Narrative re: proposed financing.

D. All plans shall be submitted to the Planning Commission twenty (20) days prior to the regular meeting of the Planning Commission.

E. From the time an application for approval of plan, whether preliminary or final, is duly filed as provided herein, and while such application is pending approval or disapproval, no change or amendment of the zoning, subdivision or other governing ordinance or plan shall affect the decision on such application adversely to the applicant and the applicant shall be entitled to a decision in accordance with the provisions of the governing ordinance or plans as they stood at the time the application was duly filed.

F. Distribution of Five copies.

Upon receipt of the five copies, the Township Secretary shall forward one copy of the plan to each of the Township Supervisors, one copy to the Huntingdon County Planning Commission; and one copy to the Township Engineer.

G. Review by the Township Engineer

(1) The Township Engineer shall review the plan and make any recommendations for action, changes, or modifications in writing to the Planning Commission for inclusion in their considerations regarding the plan.

(2) The Township Engineer shall submit his recommendations, if any, in written form to the Planning Commission within 30 days.

H. Review by the Township Planning Commission

(1) At their next regular meeting, or at a special meeting called for that purpose, after receipt of the plan the Planning Commission may review the plan to determine its conformance to the provisions contained in these regulations.

(2) The Planning Commission shall notify the Board of Supervisors in writing of any recommended action, change, or modifications to the plan after such decision is made, provided that the Planning Commission shall make such recommendations within 60 days of receipt of the application.

I. Review by the County Planning Commission

A copy of the plan shall be forwarded to the Huntingdon County Planning Commission for review and report together with a fee (paid by the applicant) established by the County Planning Commission to cover the costs of the review and report. The Board of Supervisors shall take no official action on such application until the County report is received or until 30 days from the date the application was forwarded to the county.

J. Review by the Board of Supervisors

Upon receipt of the recommendations of the Planning Commission, the plan shall be placed upon the agenda of the Board of Supervisors for review at their next regularly scheduled public meeting or, at the Board's direction, at a special meeting to be held for that purpose.

(1) The Board of Supervisors shall review the plan and the written reports of the Township Planning Commission and the Huntingdon County Planning Commission to determine if the Plan meets the provisions contained in this Ordinance. Prior to the final review of a plan for which sewer or water service is proposed, the Board of Supervisors shall require as a condition of preliminary approval that the applicant furnish written confirmation from DER and other appropriate bodies that all of applicant's proposals have received approval of all appropriate bodies.

(2) The decision of the Board of Supervisors shall be in writing and shall be communicated to the applicant personally or mailed to him at his last known address following the decision.

(a) If the plan receives preliminary approval by the Board of Supervisors, the action of the Board shall be noted, together with the date of action and signature of the Chairman and Secretary, on five copies of the plan. One copy shall be given to the applicant, one copy shall be given to the engineer, one copy shall be given to the solicitor, and two copies shall be retained in the Township files. After the preliminary approval is obtained, the applicant may immediately begin to implement improvements with construction and to lay out lots, parcels, blocks, easements and rights-of-way and construct all streets, sanitary sewage disposal systems, water supply systems,

storm drainage facilities and monuments in accordance with the approved plan but **no parcel or lot may be conveyed or recorded until after final approval of the plan.**

(b) If the preliminary plan is not approved, the decision shall specify the defects found in the plan and describe the requirements which have not been met.

(c) In response to Planning Commission comments, the applicant may submit a corrected plan for review by the township at any time prior to final action by the Township Supervisors. If the revisions to the plan are substantial, the Supervisors may, at their option, reject the plan and require its resubmission to the Planning Commission.

SECTION 403. REVIEW OF THE PLAN FOR FINAL APPROVAL

A plan shall be officially submitted to the Township Secretary for final Township review after all improvements indicated on the plan receiving preliminary approval have been constructed, assuming all fees and securities have been paid according to this ordinance. All plans which have received preliminary approval may be entitled to final approval if inspection of improvements receive approval of the Board of Supervisors.

A. All applications for final approval of a plan shall be acted upon by the Township within 90 days of its receipt.

(1) In the case where subdivision and land development is projected over a period of years, the Board of Supervisors may authorize final review of the plan by sections or stages of development as it finds essential for the protection of any finally approved section or stage of development. In each such case, prior to preliminary approval of the plan, the Board of Supervisors and the developer shall enter into a written agreement specifying the following:

(a) The sequence of development of sections or stages;

(b) The maximum time permitted the developer for final submission of the plan for each subsection as are applicable to that particular development.

(c) Where development is permitted in stages, all improvements installed shall conform to standards for such improvements in effect at the time of installation of the same.

(2) Final official submission of the plan to the Board of Supervisors shall consist of five prints of the plan, which shall fully comply with all sections of this ordinance for which the plan

received preliminary approval, plus financial security specified, all offers of dedication and deeds of easements to the municipality, and all other required documents.

B. Review by the Board of Supervisors

Upon receipt of the above, the Township Secretary shall forward immediately one copy of the plan to the Huntingdon County Planning Commission, one copy of the Township Engineer, one copy to the Solicitor and the Township to keep two copies.

(1) The final review of the plan shall be conducted by the Board of Supervisors according to all sections of this ordinance.

(2) As a condition of approval, the applicant shall permit the Board of Supervisors, the Township Engineer, or other duly appointed agents to make periodic site inspections of such nature and extent as is necessary to insure that the required improvements are being installed and constructed in conformity with the design standards contained herein or otherwise specified in the preliminary approval of the plan.

If the applicant has completed all of the required improvements, he shall notify the Board of Supervisors in writing, of the completion of the improvements and shall send a copy thereof to the Township Engineer and Solicitor or other duly appointed agents. The Board of Supervisors shall direct and authorize the Township Engineer to make a final inspection of all the aforesaid improvements after receipt of such notice. The Township Engineer shall, thereupon, file a written report with the Board of Supervisors and shall promptly deliver copy of same to the applicant. The report shall be made within 30 days after receipt by the Township Engineer of the aforesaid authorization from the Board of Supervisors. The report shall be detailed and shall indicate approval or rejection of said improvements, either in whole or in part, and if the improvements or any portion thereof shall not be approved or shall be rejected by the Township Engineer, the report shall contain a statement of the reasons for such nonapproval or rejection. For subdivisions and land developments served by off-site sewer and water service, the Engineer shall coordinate his review with that of DER and other appropriate authorities providing such service to insure that the provisions of this Ordinance are met.

(a) The Board of Supervisors shall notify the applicant in writing of action taken with relation to improvements.

(b) If any portion of said improvements shall not be approved by the Board of Supervisors, the applicant shall proceed to correct same and, upon completion, notify the Board of Supervisors for renewal and reinspection of final approval.

SECTION 404. RECORD PLAN

After completion of the procedures required by this ordinance and after final approval by the Board of Supervisors, all endorsements by the Planning Commission, Board of Supervisors and owner/developers shall be so indicated on the approved plan and on as many other copies of the plan as may be desired by the Board of Supervisors. The subdivider shall record the final plan in the office of the Recorder of Deeds of Huntingdon County within 60 days of the date approved and signed by the Supervisors.

Within ten days after a copy of the recorded plan is available from the Recorder of Deeds, a copy of such recorded Plan shall be forwarded to the Township Secretary by the applicant. No land being a part of the said recorded Plan shall be sold by the owner/developer, or building permits issued by the Township Supervisors prior to the recording of the approved plan.

SECTION 405. MINOR SUBDIVISION

All subdivisions or land developments which are defined as minor subdivisions as stipulated in this Ordinance, are exempt from the requirement to have a preliminary review and may commence final approval procedures with submission of a plan as stipulated in this ordinance, provided any additional information required is submitted with the plan. No construction may commence until the plan has received final approval by the Board of Supervisors.

ARTICLE V

PLAN REQUIREMENTS

SECTION 500. PLAN CONTENTS. PRELIMINARY REVIEW

All plans submitted for preliminary review shall be drawn to a scale of 1" = 100' or smaller, and shall contain the following information:

A. General Data

(1) Name of Proposed subdivision or land development

(2) North point, graphic scale, date plan prepared and revised

(3) Name and address of owner

(4) Name and address of individual or firm preparing plans, and applicant

(5) Names and deed book references of owner, owners property and abutting property owners.

(6) Key map showing location of proposed subdivision or land development in relation to major roads and communities and industrial areas within a radius of two miles.

B. Existing Features

(1) Perimeter boundary lines by bearings and distances, and total acreage of property

(2) Existing easements: location, width, and purposes

(3) All natural features:

(a) Floodplain

(b) Topographic contour lines at intervals of two (2) feet for land with average undisturbed slope of four (4) percent or less and at intervals of five (5) feet for land with average natural slopes exceeding four (4) percent, including source of topographic data.

(4) Man-made features in or within fifty feet of the property

(a) Sewer lines by location, size and invert elevation of sanitary, storm and combined sewers; if any of the above are not available to the site, indicate direction and distance to the nearest ones and furnish statement of availability.

(b) Watermains and fire hydrants

(c) Electrical lines, poles and street lights, if any of the above are not available on the site, indicate direction and distance to the nearest ones and furnish statement of availability.

(d) Culverts and bridges

(e) Railroads

(f) Buildings

(g) Streets, including rights-of-way and cartway widths, and approximate grades, type of pavement, walks, curbs and gutters.

C. Proposed Development

(1) Street information

(a) Location and width of rights-of-way and cartways

(b) Statement of whether streets will remain private or are intended to be dedicated to the municipality

(c) Proposed street names

(d) Typical cross-section showing materials for base and surfacing and method of construction

(e) Profiles along centerline of each proposed street, showing finished grade at a scale of 1" = 50' horizontal and 1" = 5' vertical

(f) Radius of horizontal curves, length of tangents between curves, curb radii at intersections

(g) Vegetation to be planted between curb or shoulder and right-of-way lines

(h) Curbs and gutters, location and typical design

(i) Topographic contour lines for proposed finished grades within rights-of-way at intervals specified in this ordinance. (See Section 500 B(3)(b) of this Ordinance).

(2) Lot lines to the nearest foot and area of each lot to the nearest square foot, site data tabulation including number of residential lots, typical lot size, and acreage and use of other land areas.

(3) Sidewalks, including location, width, grades, and ramps for handicapped.

(4) Lot building lines.

(5) Utility and drainage easements.

(6) Location and pipe diameter of sewer and water mains and laterals to each lot, location of soil test probes for onsite sewage systems plus a statement indicating the type of on-site systems permitted for each soil log hole as specified in the approved Pennsylvania Department of Environmental Resources "Planning Module for Land Development."

(7) Fire hydrants.

(8) Land to be reserved or dedicated for public use.

D. Signatures

(1) Signature of a Pennsylvania licensed land surveyor certifying the accuracy of the plan.

(2) Signed, notarized statement by the owner certifying ownership of the property and acknowledging all offers of dedication of lands and/or facilities to the Township and acknowledging that the owner will be responsible for maintenance of lands and/or facilities until they are completed and accepted for dedication by the Township.

(3) Space for approval signatures by the Chairman and Secretary of the Board of Supervisors, including date of such approval.

(4) STEEP SLOPE conditions exist (see Section 615 of this ordinance). The plan shall be signed and sealed by a licensed Engineer or Surveyor.

E. Other Preliminary Plan Data

The Developer shall provide such additional information as the Planning Commission may require in order to complete its review of the Preliminary Plan.

SECTION 501. PLAN CONTENTS. FINAL REVIEW

Plans submitted for final review shall include all information required in Section 500, plus the following:

A. Final perimeter boundaries of each lot with distances to hundredths of a foot and bearings to one second determined by accurate survey in the field, balanced and closed with an error of closure not to exceed one foot in ten thousand (10,000).

B. Location of installed monuments.

C. Final dimensions and bearings of rights-of-way lines and easements including radii of curves and arcs and delta angles for all curves.

D. Lot numbers as approved by the Township.

E. Primary control points, approved by the Township Engineer, or description and "ties" to control points to which all dimensions, angles, bearing, and similar data in the plan shall be referred.

F. A highway occupancy permit shall be submitted for all subdivisions if applicable.

SECTION 502. RECORD PLAN CONTENTS

All Record Plans shall be legible and drawn to scale on reproducible tracing approved by Township Supervisors. All Record Plans shall contain the following information:

A. All general data required in Sections 500 and 501 of this ordinance.

B. A signature block for review signature of the Chairman and Director of the Huntingdon County Planning Commission on the Final Record Plan.

C. The Final Record Plan shall include the following statement: "This Final Record Plan conforms with the Plan receiving final approval by the Hopewell Township Board of Supervisors on Date: _____."

ARTICLE VI

DESIGN AND IMPROVEMENTS

SECTION 600. GENERAL REQUIREMENTS

A. Application of Design and Improvement Standards

The design and physical improvements to the property being subdivided shall be provided, constructed, and installed by the developer as shown on the approved plan in accordance with the requirements of this Ordinance.

B. Land Requirements

(1) All portions of a tract shall be subdivided into lots, streets, and public lands with no area landlocked.

(2) Maximum slope of any building site may not exceed 20% grade.

SECTION 601. STREETS

A. General Requirements

(1) Where a subdivision or land development abuts or accesses a Commonwealth of Pennsylvania road, Department of Transportation Standards shall apply within such street right-of-way and supersede street horizontal and vertical standards of this section.

(2) Access to arterial streets.

Where a subdivision or land development borders on or contains an existing or recorded arterial street, the Supervisors may require that access to such street be limited by any of the following means:

(a) The subdivision of lots so as to back onto the arterial and front onto a parallel local or collector street; no driveway access shall be provided from the arterial.

(b) A series of cul-de-sacs, u-shaped streets, or short loops entered from and designed generally at right angles to such a parallel street with the rear lines of their terminal lots abutting the arterial; or

(c) A marginal access road constructed parallel to the arterial right-of-way. Such an access road shall meet all applicable standards contained herein and the centerline of the marginal access street shall be a minimum of one hundred (100) feet from the centerline of the arterial street; or

(d) The subdivision of lots so as to back onto an alley with driveway access via the alley.

(3) Street signs

The developer shall install street name and traffic control signs at all street intersections and wherever deemed necessary. Street signs which differ from the design of conventional municipal signs may be permitted provided that the design and size are approved by the Township Supervisors or the Pennsylvania Department of Transportation if applicable.

(4) Street Lights

When deemed necessary by the Board of Supervisors for the promotion of public safety, the applicant shall cause to be installed by the applicable power company, at the applicant's expense, street lights adequate for the area and type and intensity of use. Such installation shall be in accordance with a plan approved by the applicable power company. The developer shall be responsible for all costs involved in lighting the streets until such time the streets are accepted as public streets by the Township.

(5) Street Names

(a) Proposed streets which are obviously in alignment with others already existing and named shall bear the names of the existing streets.

(b) In no case shall the name of a proposed street duplicate or approximate phonetically existing or recorded street names or approximate such names by the use of suffixes such as "land," "way," "drive," "court," or "avenue."

(c) All street names shall be subject to the approval of the Board of Supervisors. The Planning Commission may contact the area emergency service agencies to review street names for potential confusion and make recommendations to the Supervisors.

(6) Access through adjacent municipalities

Where access to a subdivision or land development is required to cross land in another municipality, asssurance shall be provided that such access shall be permitted by the adjacent municipality. The street agreement between the property owner and the adjacent municipality shall be approved prior to final approval of the plan.

(7) Street Layout

Residential streets shall be so laid out as to discourage through traffic. The arrangement of streets shall provide for continuation of existing or recorded streets. Streets shall be related appropriately to the topography arranged so as to obtain usable building sites with as many as possible located at or above street grade. Grades of streets shall conform as closely as possible to the original topography and a combination of steep grades and curves shall be avoided. Grid-like layout of streets and lots shall be avoided.

B. Horizontal Design Criteria

(1) Intersections

(a) Streets shall intersect as nearly as possible at right angles and no street shall intersect another at an angle of less than sixty-five (65) degrees or more than one hundred fifteen (115) degrees.

(b) No more than two (2) streets shall intersect at the same point.

(c) Whenever possible local streets shall not intersect directly with arterial streets but shall be linked by means of a collector street.

(d) Whenever possible intersections of two (2) streets on opposite sides of a street shall be cross intersections. Any street intersection with a local or collector street shall be located no closer than two hundred (200) feet from another street intersecting the same local or collector street. Any street intersecting with an arterial street shall be located no closer than five hundred (500) feet from another street intersecting the same arterial regardless of whether the two intersecting streets are on the same side or on opposite sides (except where the intersected street has an unbroken median barrier of said local, collector or arterial street.) Distances shall be measured from the centerlines of the two (2) intersecting streets along the centerline of said local, collector or arterial street.

(e) Street cartways at street intersections shall be rounded by a tangential arc with a minimum radius of twenty (20) feet for all intersections involving a collector street and forty (40) feet for all intersections involving an arterial street.

(f) Intersection designs will be reviewed on a case by case basis for inclusion of turning lanes, medians, acceleration and deceleration lanes and traffic control devices.

(2) Curves

(a) Whenever street lines are deflected, connection shall be made by horizontal curves.

(b) The minimum centerline radius of horizontal curves shall be one hundred (100) feet for local streets, two hundred fifty (250) feet for collector streets and seven hundred fifty (750) feet for arterial streets.

(c) The minimum length of tangents between reverse curves shall be none for local streets, one hundred (100) feet for collector streets and three hundred (300) feet for arterial streets.

C. Vertical Design Criteria

(1) At all changes of street grades where the algebraic difference exceeds one (1) percent, vertical curves shall be provided to permit the following sight distances from a point 2.75 feet above grade to a point 0.5 feet above grade: local streets, one hundred fifty (150) feet; collector streets, three hundred (300) feet; and arterial streets, five hundred (500) feet. Non-symmetrical curves are permited. Tandem vertical curves (one crest and one sag or vice versa) are permitted.

(2) There shall be a minimum centerline grade of 0.50 percent for streets with shoulders or curbs.

(3) Centerline grades shall not exceed the following: minor streets, twelve (12) percent; collector streets, ten (10) percent; and arterial streets, eight (8) percent.

EXCEPTIONS to (1), (2) and (3) above:

If a minor street is designed with a grade in excess of ten (10) percent and the horizontal alignment is on a curve, the curve must have a minimum centerline radius of two hundred fifty (250) feet.

If a collector street is designed with a grade in excess of eight (8) percent and the horizontal alignment is on a curve, the curve must have a minimum centerline radius of three hundred fifty (350) feet.

On a minor street the maximum length of any grade in excess of ten (10) percent shall be two hundred fifty (250) feet.

(4) Proposed street intersections shall be located to achieve the minimum sight distances required by PennDOT standard for driveways.

D. Intersections

If the centerline grade of the intersecting road is nine (9) percent or more within one hundred fifty (150) feet of the berm of the road being intersected, there shall be a leveling area with a grade not exceeding four (4) percent for a distance of sixty (60) feet from the edge of the berm of the road being intersected.

If the centerline grade is less than nine (9) percent the four (4) percent leveling area may be reduced to forty (40) feet.

E. Street Construction General Requirements

(1) No persons, partnership, association or corporation shall construct, open or dedicate any road, street, lane or alley or any sewer or drainage facilities in connection therewith, or public use or travel in the Township without first submitting plans therefor to the Township Supervisors for their approval and no road, street, lane or alley, nor sewer or drainage facilities in connection therewith shall be opened, laid or constructed except in strict accordance with plans approved by the Township Supervisors.

(2) The developer shall pay all inspection costs incurred by the Township for inspecting the developer's street construction based on fee schedule adopted by the Supervisors.

(3) All construction shall be inspected by the Township Engineer. The Township Engineer shall be notified at least 48 hours prior to commencement of the various stages of construction. The contractor may not, under any circumstances, proceed with any stage of construction until authorization is given by the Township. Inspections and subsequent authorization to proceed given by the Township Engineer do not relieve the contractor of meeting all requirements of this Ordinance or other contracts concerning guarantee of performance.

F. Street Construction Specifications

(1) The street design standards and construction specifications herein are regarded as minimum standards and specifications. They were developed giving high priority to the safety and durability of the future Township streets. The Township reserves

the right to require designs in excess of these standards when conditions warrant and also to approve alternate designs when proven to the Township Supervisors and Township Engineer that alternate design standards are equal to or better than a design based on these standards.

(2) All construction materials, equipment, procedures and methods shall conform to the requirements of the Pennsylvania Department of Transportation Specifications, Publication 408 with latest revisions, unless specifically stated otherwise herein.

(3) All underground utilities shall be installed prior to any contruction of street pavements.

(4) Streets shall be constructed to the grades and dimensions shown on the plans, profiles and cross sections approved by the Supervisors. All streets intended to be dedicated for public use shall be paved to full cartway widths. Paving materials and methods of construction for cartways and shoulders shall conform to Township standards or applicable standards of the Pennsylvania Department of Transportation before streets will be considered by the Township for acceptance into the Township maintained road system.

(a) After the street has been constructed and before such streets are dedicated, the earthen areas between the shoulder or curbs and the right-of-way line shall be finish-graded and seeded with grass or other appropriate vegetation to prevent erosion.

(b) Details and specifications for cartway and shoulder paving are set forth in Exhibit 601 (F)(4)(b) which is a part of this ordinance and appears at the end.

(c) Curbs, Shoulders and Slopes

1. Curbs may be required on streets if the Supervisors deem it necessary to control runoff and erosion, stabilize cartway edges, enhance public safety, continue an existing curb or gutter to the next intersection, or if intensive or unusual traffic movements are anticipated due to commercial, industrial or multi-family residential developments.

2. Curb Construction Standards - See Exhibit 601 (F)(4)(c) which is a part of this ordinance and appears at the end.

Plain cement concrete curbs shall be installed unless other types are approved by the Township.

3. Shoulders

Shoulders shall be a six (6) inch depth of PennDOT 2RC aggregate, graded and rolled; on grades three (3) percent and over, shoulders shall receive a Type 3 shoulder treatment in accordance with PennDOT Form 408 as amended. The shoulder shall then be protected from traffic for twenty-four (24) hours. In driveway entrances screenings may be applied to prevent tracking of asphalt.

4. Slope

Maximum slope of banks measured perpendicular to the centerline of the street shall be three (3) to one (1) for fills, and two (2) to one (1) for cuts. Cuts through bedrock formation may be one (1) to one (1).

G. Bridges and Culverts

(1) The structural design and geometry of proposed bridges shall meet the design loadings and clearances as described or required in PennDOT Design Manuals 2 and 4, or other standards found acceptable by the Township Engineer.

Bridges shall be designed such that they need not be posted with a weight limit. Strength Design Method shall be used. (Load Factor).

Live Load: H-S 25 Loading, Modified Military Loading (2 Axles of 30 kips each at 4'-0" c/c), or P-82 (204 Kip Permit Loading) with AASHTO Group IB Loading.

(2) Culverts shall be adequate to meet applicable stream flow characteristics and shall be designed to accepted engineering standards and practices.

(3) If permits are required by other agencies, these must be obtained by the Applicant prior to Final Plan approval.

H. Cul-de-sacs (Dead-end streets)

Cul-de-sacs designed to be so permanently, shall be provided with a turn around having an outside cartway diameter of at least eighty feet (80') and a property line diameter of at least one hundred feet (100'). Cul-de-sacs planned in excess of 1500 feet in length shall be subject to the review and approval of the Governing Body. Approval of additional length shall be granted only when deemed to the best interests of the citizens and the Township and when no jeopardy in regard to public protection is found.

I. Rights-of-Way with Street Widths

(1) Arterial - No less than 60 feet or as approved by the Township Supervisors.

(2) Collector - No less than 60 feet

(3) Minor - No less than 50 feet

(4) Marginal Access - No less than 50 feet

(5) Alleys - No less than 20 feet.

SECTION 602. EASEMENTS

A. General Requirements

1. Easements that are not parallel to lot or street lines shall have distances and dimensions describing the exact extent of the easement on the land.

2. Notes on the subdivision or land development plan shall indicate any restrictions on use of the easement, who may use the easement, and who shall be responsible for maintenance of the easement area.

B. Utility Easements

Utility easements outside street rights-of-way shall be a minimum of fifteen (15) feet in width.

C. Drainage Easements

(1) Where a subdivision will be traversed by a watercourse, there will be provided a drainage easement conforming to existing watercourse.

(2) The owner of the watercourse shall grade, seed and maintain living vegetative cover within the easement to prevent erosion and sedimentation, and if owner refuses, Township shall so perform necessary work and hold owner financially responsible.

(3) Nothing shall be placed or planted within the drainage easement which will impede the flow of water.

(4) Easements for stormwater management facilities as required in Section 606 shall be shown on the subdivision or land development plan.

D. Other Easements

Other easements deemed necessary or desirable by the developer or Township shall be shown on the subdivision plan.

SECTION 603. LOTS

A. General

(1) Insofar as practical side lot lines shall be at right angles to straight street lines or radial to curved street lines.

(2) Lots shall be laid out so as to provide drainage away from all buildings, and individual lot drainage shall be coordinated with the general storm drainage plan for the area if one is adopted by the municipality.

B. Lot Frontage and Access

(1) All lots shall have direct access to a public street (or to a private street if it meets the requirements of this Ordinance). Such access shall be an easement or an actual extension of the lot or property at least twenty (20) feet in width.

(2) Where a lot abuts an arterial street with an existing local and/or collector street, access shall be from the local or collector street only. Where this Ordinance requires installation of a local, marginal access or other type of street all lots abutting such local, marginal access or other type shall derive access solely therefrom.

C. Lot Dimensions and Area

(1) Lot dimensions shall conform to the following minimum regulations:

(a) Without public water and without public sewer services:

1. Single family dwellings: 43,560 square feet

2. Two-family dwellings: 87,120 square feet

3. Multi-family dwellings and others: not less than 43,560 and adequate water and sewer

4. Lot width at building line: 80 feet

(b) With public water and with public sewer services:

1. Single family dwellings: 21,780 square feet

2. Two-family dwellings: 32,670 square feet

3. Multi-family dwellings and others: 43,560 square feet

4. Lot width at building line: 75 feet

SECTION 604. BUILDING LINES SET BACK

Building lines shall conform to the following minimum standards:

A. In no case shall the required setbacks from street rights-of-way lines be less that the following:

(1) Front Yard:

Arterial Streets - (Example: Route 26) Forty (40) feet from right-of-way line.

Collector Streets - (Example: Township Road) Thirty (30) feet from right-of-way line.

Minor Streets - (Example: Subdivision Streets) Thirty (30) feet from right-of-way line.

(2) Side Yards: Two (2) side yards not less than ten (10) feet each.

(3) Rear Yards: Not less than ten (10) feet

(4) Corner Lots: Where a lot is situated at the intersection of two streets, both lot and faces with street frontage shall be considered front yards.

B. Adjustments

Where topographic or other physical conditions indicate, the Board of Supervisors may increase or decrease the building line setback.

SECTION 605. PUBLIC GROUNDS AND OPEN SPACES

No proposed park, playground, school, easement or other public use shall be dedicated as such by subdivider unless Township accepts dedication.

SECTION 606. STORM DRAINAGE

A. General Provisions

(1) Subdivision or land development projects shall be designed to control storm drainage as follows:

a. To control accelerated run off, and erosion and sedimentation problems at their source by regulating activities which cause such problems.

b. To utilize and preserve desirable existing natural drainage systems, to encourage the recharge of groundwaters, to prevent the deterioration of groundwater quality, and to preserve the quality of streams and watercourses in the municipality.

c. To provide permanent stormwater management structures that can be properly maintained in the municipality.

d. To assure that the peak rate of stormwater run off is no greater after development than prior to development.

(2) This section shall apply to all land and watercourses within the Township in conjunction with the following activities: land development, land disturbances and alteration, construction of impervious surfaces, new structures and additions to existing structures, changes or alterations of any watercourse or drainageway, diversion or piping of any natural or man-made stream channel, installation of stormwater systems or appurtenances, and logging or mining operation.

(3) The following activities are specifically exempt from the provisions of this section:

a. Land disturbances affecting less than five-thousand (5000) square feet of a lot during any one (1) year period.

b. Land disturbances associated with the construction or alteration of one (1) and two (2) family dwellings provided that the disturbance is less than five-thousand (5000) square feet and does not alter any stormwater conditions beyond the boundaries of the lot or alter provisions of a previously approved stormwater management plan for the lot or encompassing subdivision.

c. Use of land for gardening for home consumption.

d. Agriculture when operated in accordance with a conservation plan appoved by the Huntingdon County Conservation District.

e. Logging operations which are following provisions specified in Best Management Practices, Bureau of Forestry, Pennsylvania Department of Environmental Resources and which are operating under an erosion and sedimentation control plan approved by the appropriate government agency.

B. Relationship to Other Regulations

Permits and approvals issued pursuant to this section do not relieve the developer of the responsibility to secure permits and approvals for activities regulated by other applicable codes, rules, acts or ordinances. If more stringent requirements concerning regulation of stormwater or erosion and sedimentation control are contained in the other codes, rules, acts or ordinances, the more stringent regulations shall apply.

C. Design Standards

All activities regulated herein shall be designed and maintained in accordance with the following requirements:

(1) Pre-development and post-development stormwater run off shall be computed for 24 hour storm frequencies of two, ten, twentyfive and one hundred year storm events. Where farm, field or undisturbed land is the existing natural condition, meadowland and shall be used as the starting base for such calculations instead of the actual conditions.

(2) Storm drainage conveyance systems for the development shall be designed to a minimum of a one (1) in ten (10) year storm without surcharging inlets; conveyance of a one (1) in one hundred (100) year storm shall be designed so as not to endanger life or seriously damage property.

(3) Unless the subdivision/land development project is located within a DER approved Regional Watershed Stormwater Management Plan area, the stormwater detention facilities shall be sized and designed as follows:

a. Outflow: peak rate of a 10-year, 24-hour, predevelopment storm

b. Inflow: 25-year, 24-hour, post development storm

(4) The following methods to compute run off may be used: USDA, Technical Release No. 55; Pennsylvania Department of Transpor-

tation; Recommended Hydrologic Procedures for Computing Urban Run Off For Small Watersheds in Pennsylvania prepared by Commonwealth of Pennsylvania, Department of Environmental Resources, Bureau of Dams and Waterway Management, Division of Stormwater Management; or other methods approved by the Township Engineer.

(5) The Township Engineer may require additional storm drainage outfall treatment and/or channel protection based on the Erosion Control regulations of the Pennsylvania Department of Environmental Resources, 25 PA Code 102.1 et. seq.

(6) A minimum twenty (20) foot wide drainage easement shall be provided around all major storm water conveyance facilities and from such facilities to a public right-of-way. In the case of a detention basin (dry pond), the easement shall follow the one-hundred (100) year designed water elevation. In the case of a permanent pond, the easement shall extend twenty (20) feet beyond the normal water elevation. The easement(s) shall comply with Section 602 of this Ordinance.

D. Stormwater Management Plans shall include, but not be limited to, the following information:

(1) A soil erosion and sedimentation control plan.

(2) A declaration of adequacy from the local Pennsylvania Department of Transportation District Office when utilization of a Pennsylvania Department of Transportation stormwater drainage system in proposed.

(3) Upstream watershed map.

(4) Delineation of soil types, pursuant to the "Soil Survey of Huntingdon County, Pennsylvania," prepared by the Soil Conservation Service, U.S. Department of Agriculture, in cooperation with the Pennsylvania State University and the Pennsylvania Department of Agriculture.

(5) Construction specifications, including the materials to be used for stormwater management structures.

(6) Structures classification, pursuant to Chapter 105, Water Obstructions and Encroachments, Pennsylvania Department of Environmental Resources (25 PA Code).

(7) A note on the recorded plan signed by the developer/land owner that the stormwater management system shall be maintained in proper working order and that the system is to be a permanent fixture which can be altered or removed only after approval of a revised plan by the Supervisors.

(8) Hydraulic and stormwater management structure computations.

(9) A determination of the effect on downstream property within one-hundred (100) feet of the tract for a residential site plan and within five-hundred (500) feet of the tract for other uses or combination of uses.

(10) The following certification by the applicant's engineer:

"I, _____, hereby certify that the stormwater management plan meets all design criteria of the stormwater management controls of the Hopewell Township Subdivision and Land Development Ordinance."

(11) Where deemed necessary, the Township may require horizontal and vertical profiles of any existing watercourse or drainageway channel, including hydraulic capacity.

SECTION 607. SEWAGE DISPOSAL AND WATER SUPPLY

A. Sewage Disposal

(1) Sewage disposal facilities shall be approved by the Township's Certified Sewage Enforcement Officer (SEO) and the Pennsylvania Department of Environmental Resources (DER). All proposed sanitary sewage disposal systems shall comply with applicable rules and regulations of (DER).

(2) Where a community sewage treatment project is proposed, the design must be approved by the Township Engineer and the Department of Environmental Resources (DER). In addition, the Developer must provide agreements or covenants to guarantee operation and maintenance of said system. This agreement or covenant must be referred to on the approved subdivision or land development final plan and in all deeds for lots, parcels or tracts within said subdivision or land development. The operation and maintenance agreements or covenants are subject to review by the Township Solicitor and Township Engineer.

(3) The Township reserves the right to require the Developer to design and construct the sewage collection, conveyance and treatment facilities, and upon completion of construction to the satisfaction of the Township Engineer, to then turn such facilities over to the Township for operation and maintenance. If the Township selects this option, the application(s) to DER for a permit to construct such facilities shall be made by the Township using documents prepared by the Developer and

approved by the Township's Engineer and Solicitor. All costs in connection with such a project, including design, construction, and Township reviews and approvals shall be borne by the Developer

Public Water Systems

(1) Where a public water system is proposed, it shall be appoved by the Pennsylvania Department of Environmental Resources (DER) and shall be designed and constructed to applicable rules and regulations of the Department.

(2) The Developer shall provide agreements or covenants to guarantee operations and maintenance of the public water supply systems. The agreement or covenant shall be referred to on the approved subdivision or land development final plan and in all deeds for lots, parcels or tracts within said subdivision or land development. The operation and maintenance agreements or covenants are subject to review by the Township's Solicitor and Engineer.

SECTION 608. UTILITY LOCATION

A. Whenever the subdivision plan involves five (5) or more lots, utilities shall be installed underground by the subdivider.

B. All utilities shall be installed in a manner which will allow safe and ready access for the installation and maintenance of other utilities. All utility installations shall be in accordance with the service utility's specifications and with its rules and regulations on file with the Pennsylvania Public Utilities Commission.

C. Water and Sewer, if public, installed within street right-of-way, and all other utilities located in easement 15 feet width adjacent and parallel with property lines.

D. Prior to installation all utility companies must be contacted in order to coordinate all work.

SECTION 609. EROSION AND SEDIMENTATION CONTROL

A. An erosion and sedimentation control plan, prepared under the guidelines of the Pennsylvania Department of Environmental Resources, shall be provided for all earthmoving activities for the proposed subdivision. Review and approval of the erosion and sedimentation control plan by the Department of Environmental Resources or its designated agent shall be required for preliminary approval of the plan.

B. The Township Engineer and/or the Pennsylvania Department of Environmental Resources or its designated agent may inspect the construction site to ensure compliance with the approved erosion and sedimentation control plan.

SECTION 610. GRADING AND DRAINAGE

The following requirements in connection with grading and drainage shall be met:

(1) All lots shall be graded to provide proper drainage away from buildings without ponding, except where other arrangements are approved by the Township.

(2) Alterations to existing storm run-off patterns or creation of new storm run-off facilities such as swales and drains shall conform to Section 606 (Stormwater Drainage) of this Ordinance.

(3) Earth moving within floodplains or watercourses shall conform to this Ordinance and any effective Flood Plain Oridinance. Grading equipment is not permitted in flowing streams unless so stipulated by DER Permit.

SECTION 611. MONUMENTS AND MARKERS

A. All monuments and markers required herein shall be accurately placed by a licensed Professional Land Surveyor prior to final approval of the plan.

B. Monuments

(1) Monuments shall be constructed of concrete and measurements of same shall be at least six (6) inches square or four (4) inches in diameter with exact center point, and at least twenty-four (24) inches in length.

(2) Monuments shall be placed on right-of-way lines at change of direction and at intermediate points where topography interfers with line of site.

C. Markers

Markers shall be iron pins measuring 30 inches in length, and not less than one-half (½) inch in diameter.

D. Lot Markers and Monuments

Lot markers and monuments shall be placed at all corners prior to sale.

SECTION 612. PRIVATE DRIVEWAYS

A private driveway shall be for individual or single lot use.

SECTION 613. SIDEWALKS

If sidewalks are included in Subdivision Plan, said sidewalk must be approved by the Township Engineer.

SECTION 614. FLOODPLAIN DESIGN STANDARDS

Subdivision and land development shall comply with the Hopewell Township Floodplain Ordinance.

SECTION 615. STEEP SLOPE REQUIREMENTS

If the topography of the subdivision or land development property is such that 20 percent or more of the property contains ground surface slopes of 25 percent or steeper, then the subdivision and land development plan shall be reviewed by a Licensed Engineer prior to submission of the Preliminary Plan to the Township. The Engineer's signature and the imprint of the Engineer's seal in the signature block on the Plan shall attest to the fact that the Engineer has reviewed the Plan and found it to be satisfactory and appropriate to the terrain for the following conditions:

A. Sanitary sewage disposal system;

B. Erosion and sedimentation control plan;

C. Grading and drainage;

D. Stormwater Management measures; and

E. Lot size, lot arrangement and street layout as they relate to (A) through (D) above.

ARTICLE VII

PENALTIES, AMENDMENTS, SEVERABILITY, REPEALER AND EFFECTIVE DATE

SECTION 700. PENALTIES

Any person, partnership, or corporation who or which being the owner or agent of the owner of any lot, tract or parcel of land shall lay out, construct, open or dedicate any street, sanitary sewer, storm sewer, water main or other improvements for public use, travel or other purposes or for the common use of occupants of buildings abutting thereon, or who sells, transfers or agrees or enters into an agreement to sell any land in a subdivision or land development whether by reference to or by other use of a plat of such subdivision or land development or erect any building thereon, unless and until a final plat has been prepared in full compliance with the provisions of this act and of the regulations adopted hereunder and has been recorded as provided herein, shall be guilty of a misdemeanor, and upon conviction thereof, such person, or the members of such partnership, or the officers of such corporation, or the agent of any of them, responsible for such violation pay a fine not exceeding one thousand dollars ($1,000) per lot or parcel or per dwelling within each lot or parcel. All fines collected for such violations shall be paid over to the municipality whose ordinance has been violated. The description by metes and bounds in the instrument of transfer or other document used in the process of selling or transferring shall not exempt the seller or transferor from such penalties or from the remedies herein provided.

A. The Township may initiate and maintain civil action;

(1) To obtain injunctive relief against the owner or agency who attempts the improper sale or conveyance of land; or

(2) To set aside and invalidate any conveyances of land made prior to Plan approval of any Subdivision; or

(3) To enforce, at law or in equity, any of the provisions of this Ordinance.

B. Nothing herein shall prevent the Township from taking such other action necessary to prevent or remedy any violation.

SECTION 701. AMENDMENTS

Provisions of this Ordinance may, from time to time, be amended through action of the Board of Supervisors in the manner provided by of the Pennsylvania Municipalities Planning Code.

SECTION 702. SEVERABILITY

The provisions of this Ordinance are severable and if any provisions, sentence, clause, section, part or application thereof shall be held illegal,

invalid, or unconstitutional, such illegality, invalidity, or unconstitutionality shall not affect or impair any of remaining provision, sentence, clause, section, part or application. It is hereby declared to be the legislative intent of the Governing Body that this Ordinance would have been adopted had such illegal, invalid, or unconstitutional provision, sentence, clause, section or part not been included therein and if such illegal, invalid or unconstitutional application had been specifically exempted therefrom.

SECTION 703. REPEALER

All ordinances or parts of ordinances inconsistent herewith are hereby repealed. Nothing in this Ordinance hereby adopted shall be construed to affect any suit or proceeding now pending in any court or any right accrued, or liability incurred, or any cause or causes of action accrued or existing, under any ordinance repealed by this Ordinance. Nor shall any right or remedy of any character be lost, impaired or affected by the Ordinance.

SECTION 704. EFFECTIVE DATE

This Ordinance shall become effective from and after 18 days after its publication as required by law.

Enacted and Ordained into an Ordinance this 4 day of January, 1993.

HOPEWELL TOWNSHIP SUPERVISORS

Gerald L. Turece
Chairman

Jimmy L. Kibel
Supervisor

David J. Brown
Supervisor

ATTEST:

Deb M. Lause
Secretary to Hopewell Township Supervisors

TYPICAL ROAD CROSS SECTIONS

NOT TO SCALE

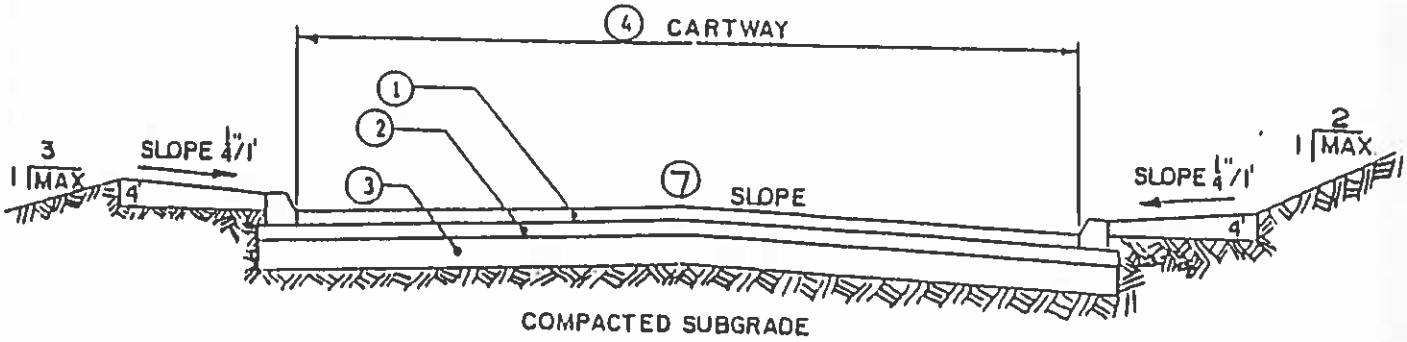

ROAD WITH CURBING
(Shown With Low Profile Bituminous Curbing

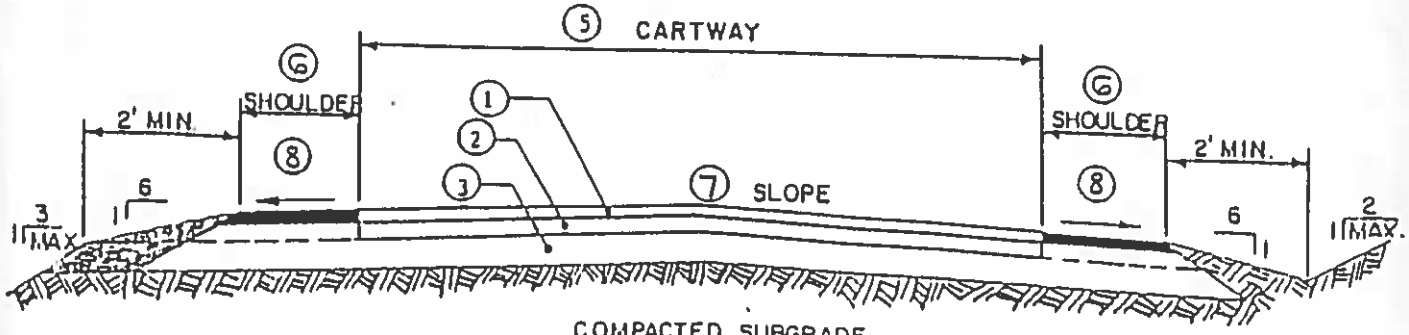

EXTEND STONE BASE TO DAYLIGHT EVERY 100' FOR 5' WIDTH.

ROAD WITH SHOULDERS

		FUNCTIONAL CLASSIFICATION		
		Major Street (Arterial)	Collector Street	Minor Street (Local)
ID-2 Wearing Course	1	1 1/2"	1 1/2"	1 1/2"
Bituminous Concrete Base Course	2	5"	5"	4"
2A Stone Subbase	3	6"	6"	4"
Cartway Width with Curbing	4	28' min.	28' min.	28' min.
Cartway Width with Shoulders	5	12' Lanes	20' min.	18' min.
Shoulder Width	6	8' min.	4' min.	2' min.
Pavement Cross Slope	7	2% min., 4.5% max.	2% min., 4.5% max.	2% min., 4.5% max.
Shoulder Cross Slope	8	4% min., 6% max.	4% min., 6% max.	4% min., 6% max.
Parking Lanes	9	10'	10'	10'

EXHIBIT 601 F (4)(b)

Proof of Publication of Legal Notice

In Accordance with the Provisions of "Newspaper Advertising Act"
approved May 16, 1929, P.L. 1784, as amended

Proof of Publication

vs

Copy

NOTICE IS HEREBY GIVEN that the Supervisors of Hopewell Township, Huntingdon County, Pennsylvania, intend to consider for passage, approval and adoption, a Subdivision and Land Development Ordinance at a meeting to be held at 8:00 p.m. on January 4, 1993 at the Township Meeting House.

A summary of the provisions of the said proposed Hopewell Township Subdivision and Land Development Ordinance follows:

Article I- General Provisions

Article II- Definitions

Article III- Fees and Securities

Article IV- Subdivision Application Procedure and Approval Process

Article V- Plan Requirements

Article VI- Design and Improvements

Article VII- Penalties, Severability, Repealer and Effective Date.

The effective date of the Ordinance shall be no less than seven days after the publication of this notice and not before January 4, 1993.

Exhibits

The full and complete text and content of the Hopewell Township Subdivision and Land Development Ordinance above referred to is available for inspection at the home address of Rebe M. Fouse, the Secretary of the Supervisors of Hopewell Township, R.D. #1, Box 96, James Creek, Pennsylvania 16667 telephone (814) 658-3790 the office of James E. Himes, Esquire, the Solicitor for Hopewell Township, 222 Penn Street, Huntingdon, Pennsylvania 16652, telephone (814) 643-1760; and in the Huntingdon County Courthouse, on the second floor, in the Federal Law Library, which is on the south side facing Penn Street.

Any person or parties wishing to examine said Hopewell Township Subdivision and Land Development Ordinance may do so at the appropriate places above indicated during regular business hours, and may appear at said meeting above referred to at which time consideration will be given to an examination of the said Hopewell Township Subdivision and Land Development Ordinance and passage, approval and adoption of the same.

Hopewell Township, Supervisors
By: Rebe M. Fouse, Secretary

James E. Himes, Esquire
Township Solicitor
222 Penn Street
Huntingdon, PA 16652
(814) 643-1760

State of Pennsylvania
County of Huntingdon } SS

Marcella M. Pelton being duly sworn according to law, deposes and says that ~~xxx~~ (she) is Classified Advertising Manager of The Daily News, a newspaper of general circulation in Huntingdon County, Published at Huntingdon, Pennsylvania, daily, established in 1922 and that the legal notice attached hereto and made part hereof was published in said Newspaper

December 17, 1992

, that the affiant is not interested in any manner in the subject matter of said notice or advertisement, and that all of the allegations contained herein as to the time, place and character of the said publication are true and correct

Marcella M. Pelton

Sworn to and subscribed before me this 5th day of January A.D. 1993

My Commission expires

Statement of Advertising Costs

To James E. Himes Dr

For publishing Notice or Advertisement attached hereto on above dates December 17, 1992 $ 72.00

Probating same Proof of Publication $ 2.00

Total $ 74.00

Publisher's Receipt for Advertising Costs

The Daily News, by the publisher or authorized representative whose signature follows, hereby acknowledges receipt of the aforesaid advertising and probation costs and certifies that the same have been fully paid.

THE DAILY NEWS

By

APPLICATION FOR PRELIMINARY REVIEW
FOR
ANY SUBDIVISION

1. All Names of Owners of Record:

   Address:

   Telephone Number:

   Tax Assessment Number:

   Deed Book Number of Parcel:

2. Applicant's name, address and telephone number if different than record owner:

3. Fees as set forth in Section 300, Subsection B of the Subdivision Ordinance:

4. Acreage in subdivision:

5. Number of lots in subdivision:

6. Name of subdivision (if any):

7. Proposed use of subdivision lots or parcels (if known):

Following delivery of this Application to the secretary of the Hopewell Township Supervisors, a preliminary review conference will be scheduled.

Signatures of Record Owners or Applicant if different than Record Owners

Date: _____

_____

_____

_____

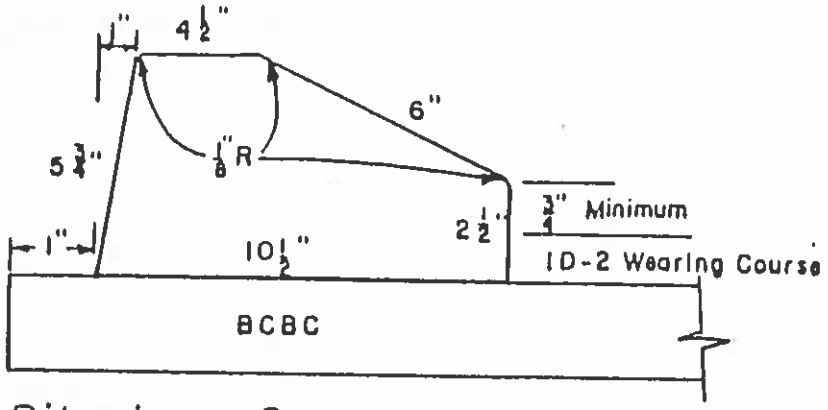

Bituminous Concrete Curb Detail

NOT TO SCALE

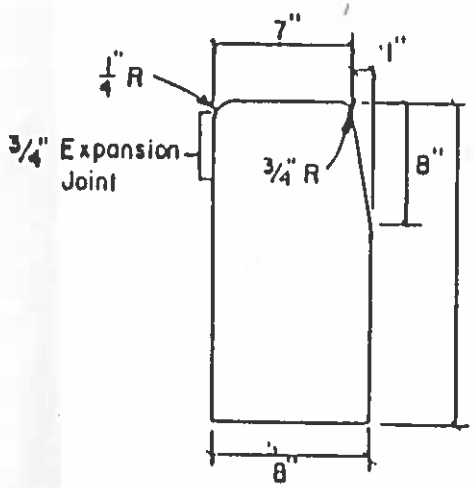

NOTE:

Contraction Joint shall be placed every 10'-0" max.; 4' min.

Premolded Expansion Joint Material shall be cut to conform to the cross sectional area and shall be placed at structures, curb returns, and at the end of the Work Day.

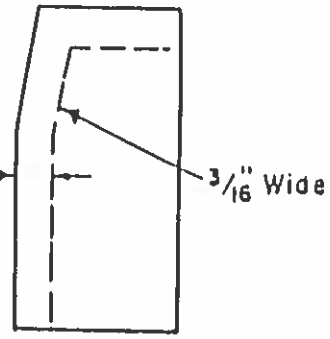

Section Detail

Sawed Joint Detail

Plain Cement Concrete Curb

NOT TO SCALE

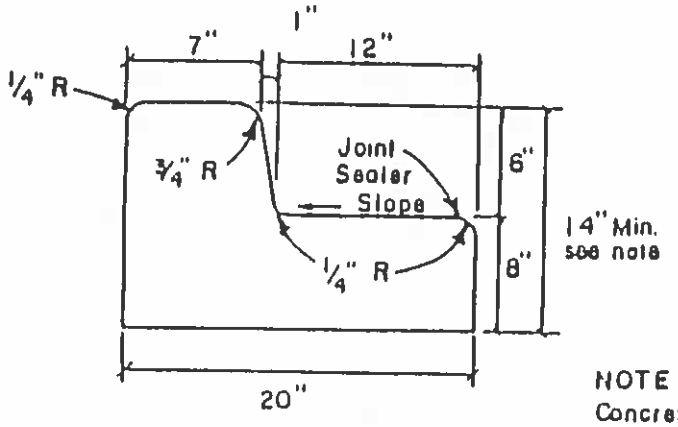

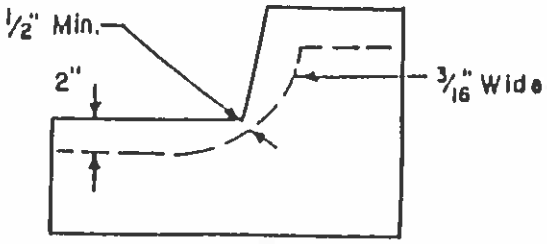

NOTE

Concrete Shall Be Minimum 6" Or Some Depth As Wearing Course And Base Course.

Section Detail

Sawed Joint Detail

Plain Cement Concrete Curb Gutter

NOT TO SCALE

EXHIBIT 601 F (4)(c)