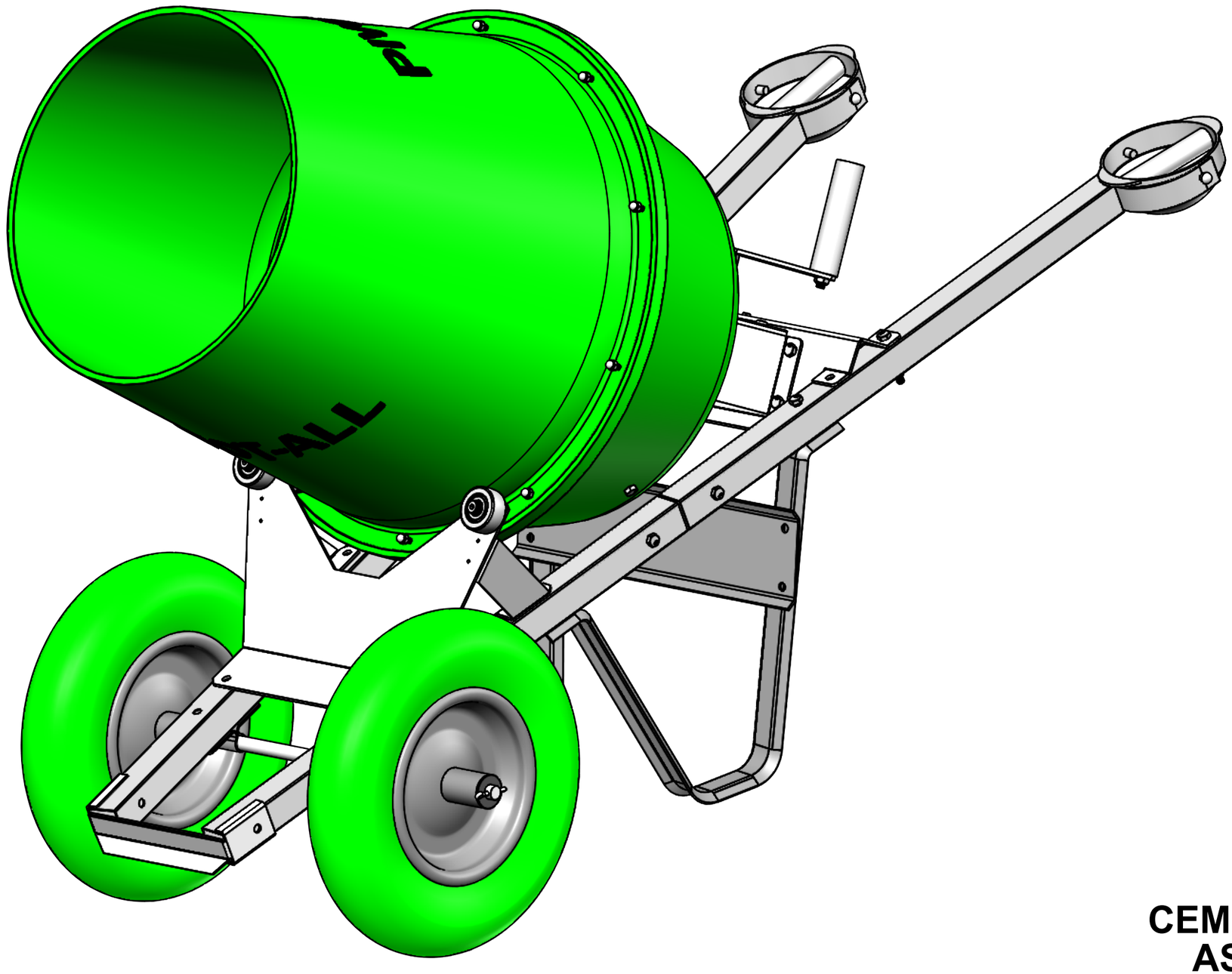

CEMENT MIXER ASSEMBLY INSTRUCTIONS

STEP:1

Identify parts

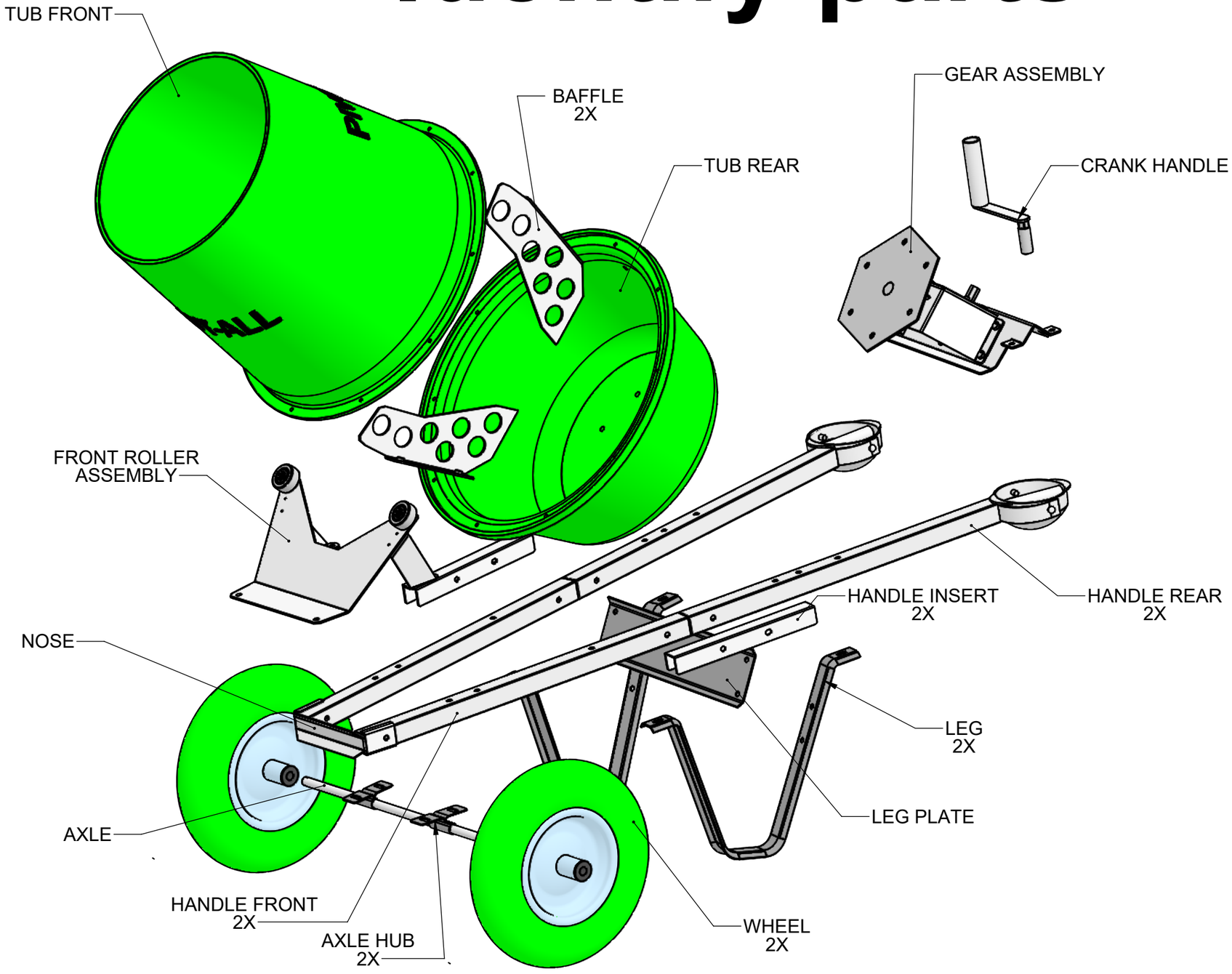

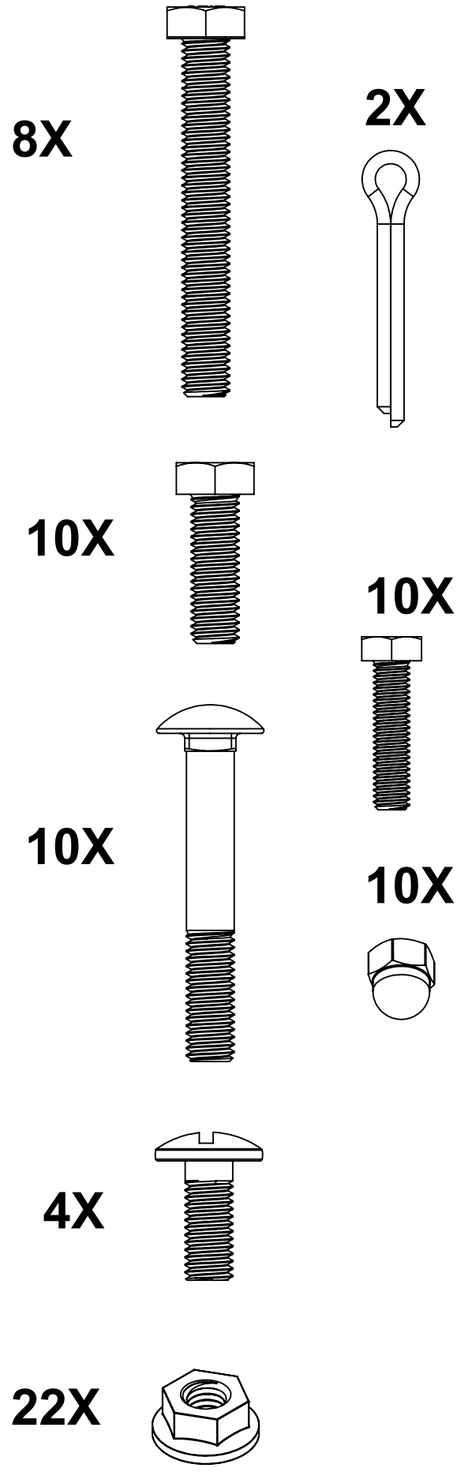

STEP:2

PIVOT-ALL MOTION TOOLS
AMENDMENT TO INSTALLATION INSTRUCTIONS
SPLIT HANDLE

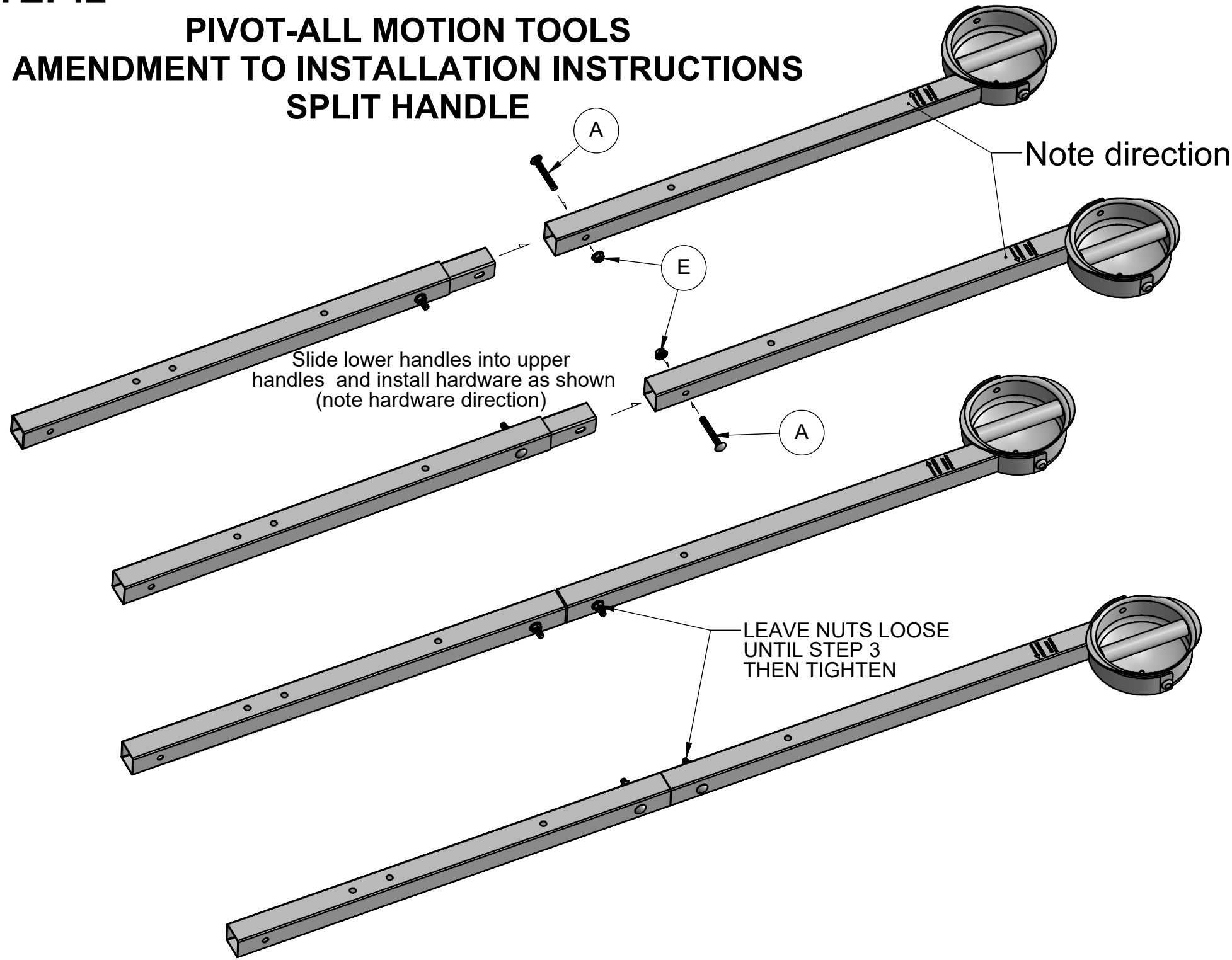

STEP:3

Assemble as shown
DO NOT TIGHTEN YET
Note: Directions

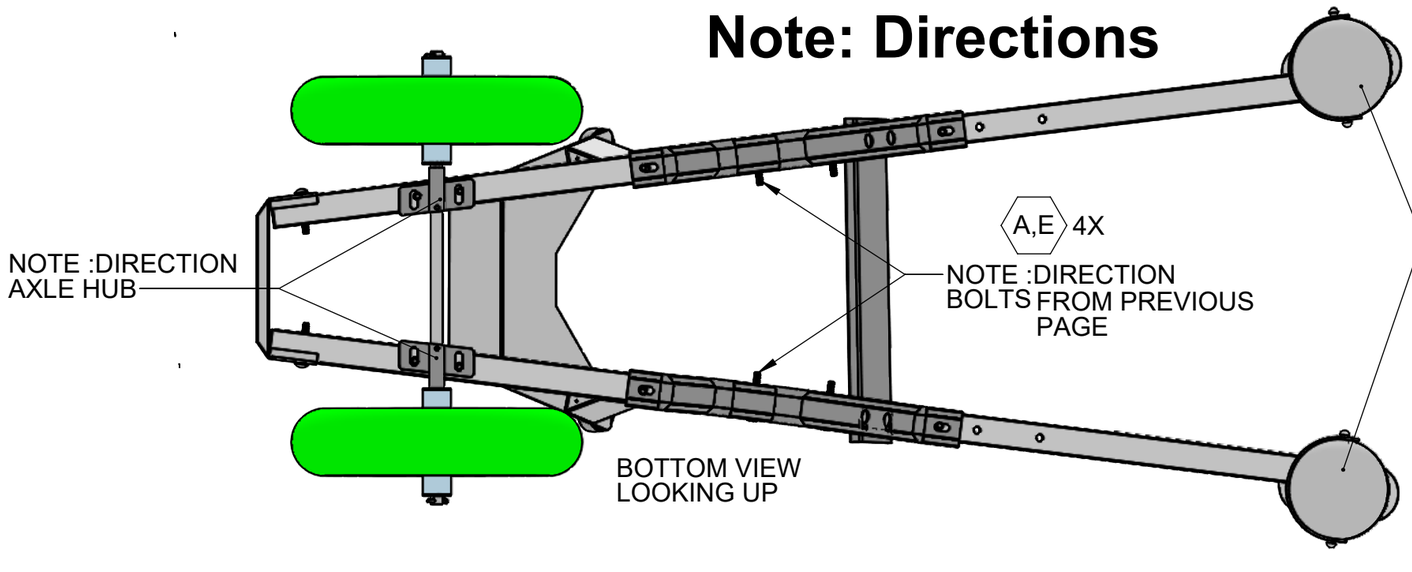

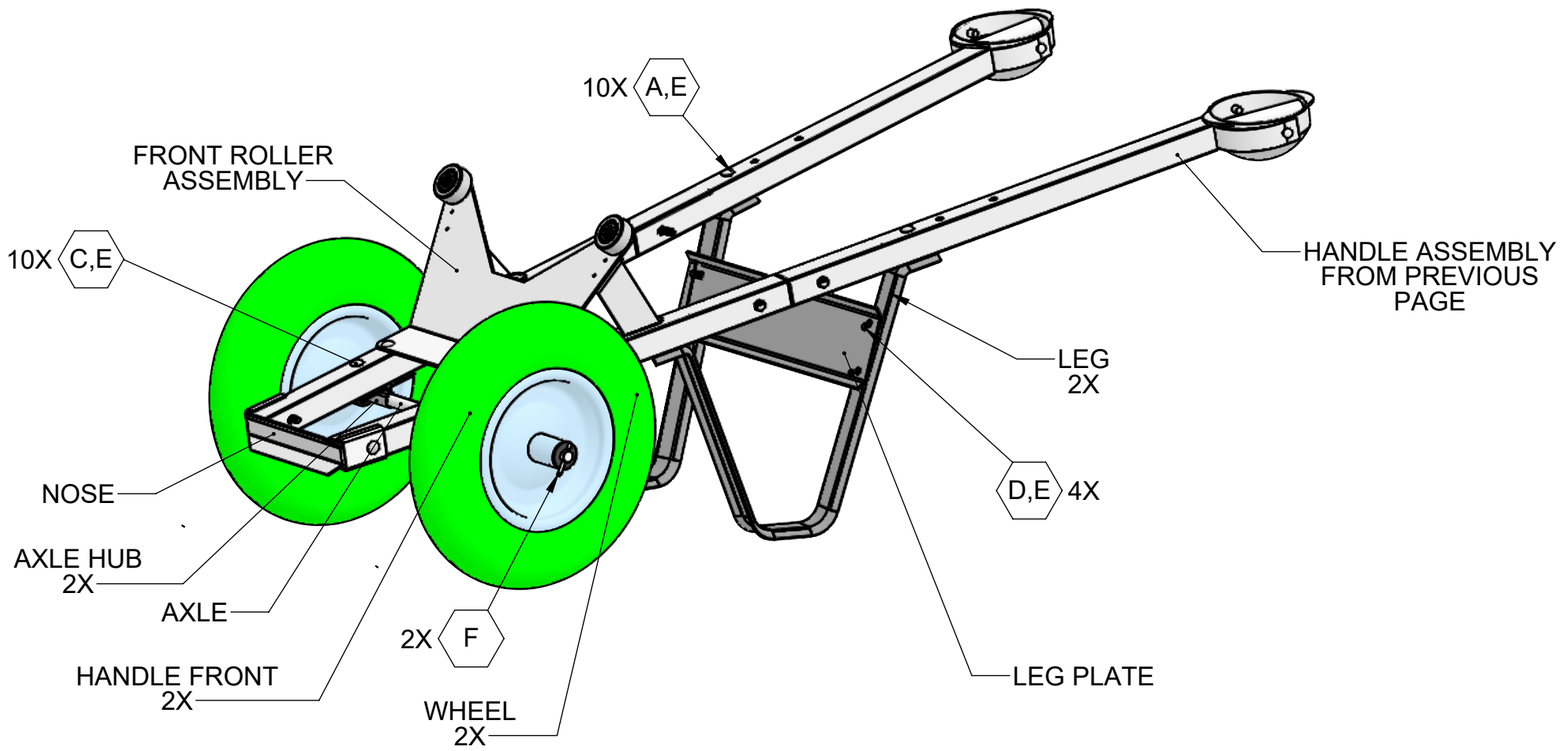

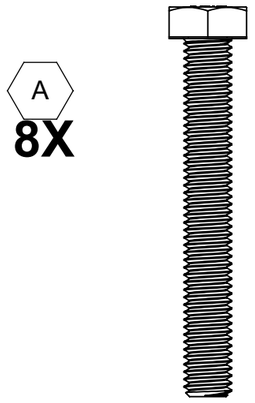

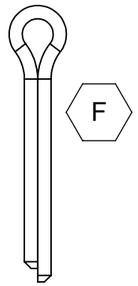

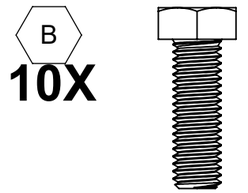

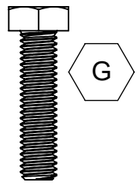

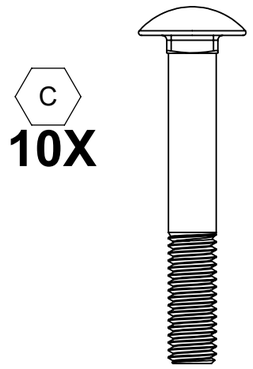



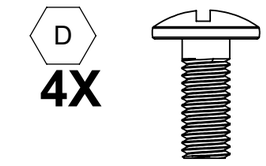



STEP:4

Assemble as shown
TIGHTEN ALL

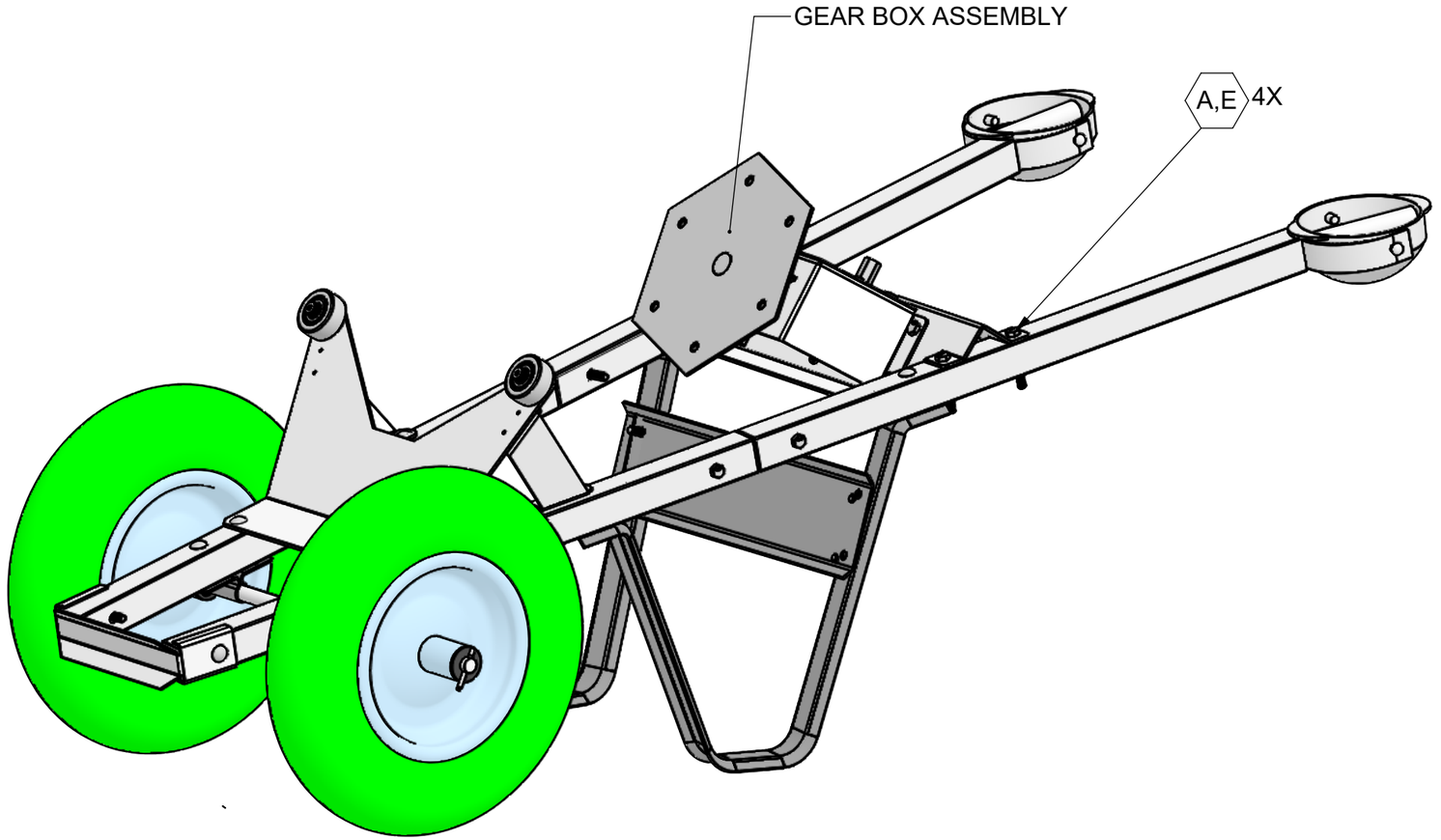

A
8X

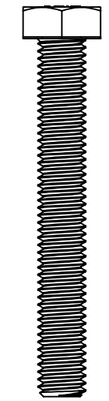

2X

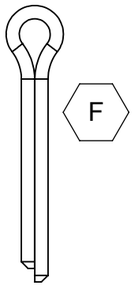

B
10X



10X

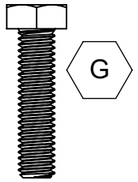

C
10X

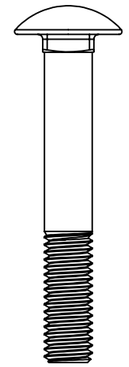

10X

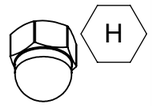

D
4X

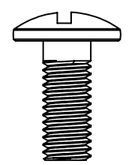

E
22X



STEP:5

Assemble as shown
TIGHTEN ALL

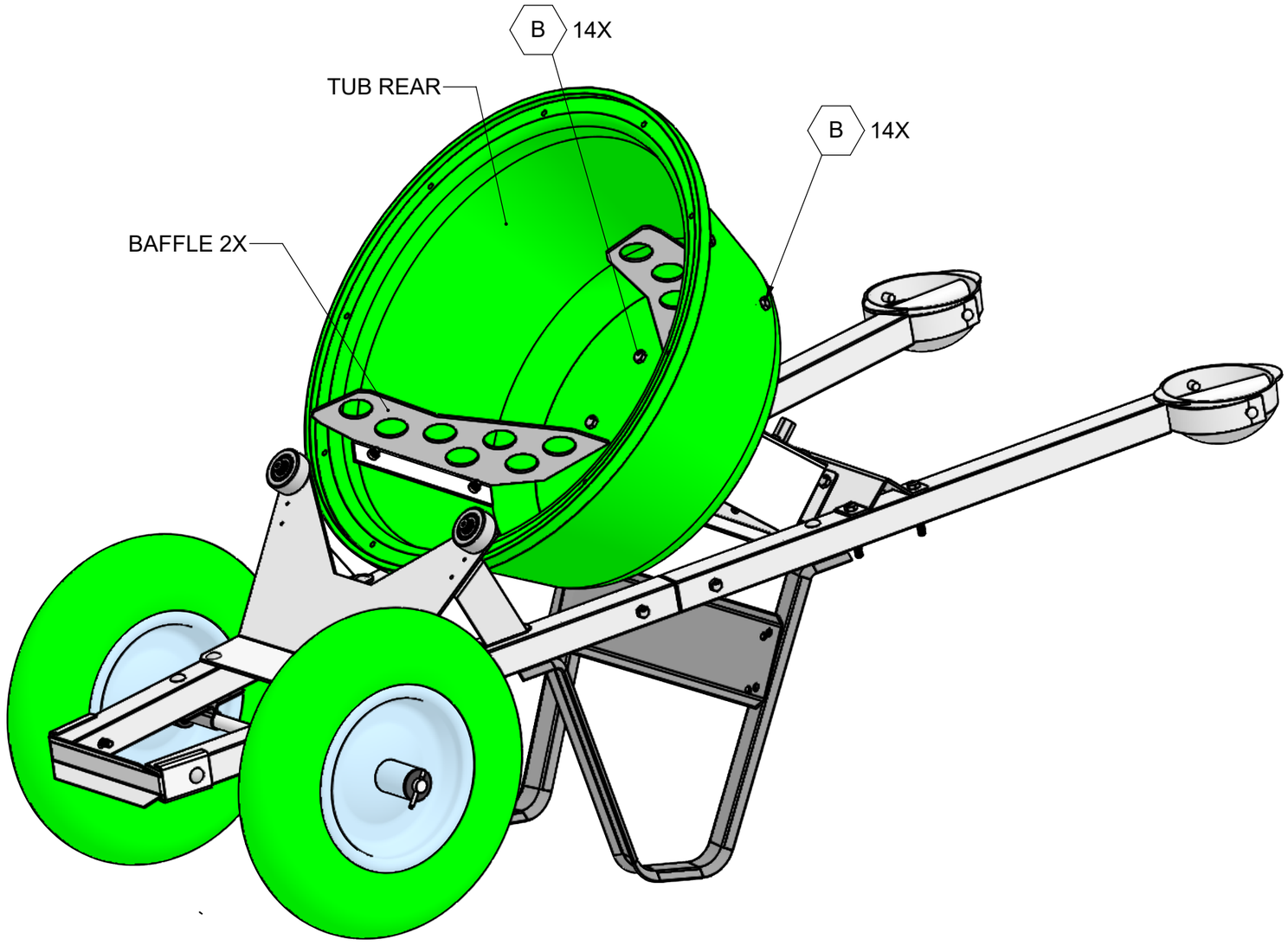

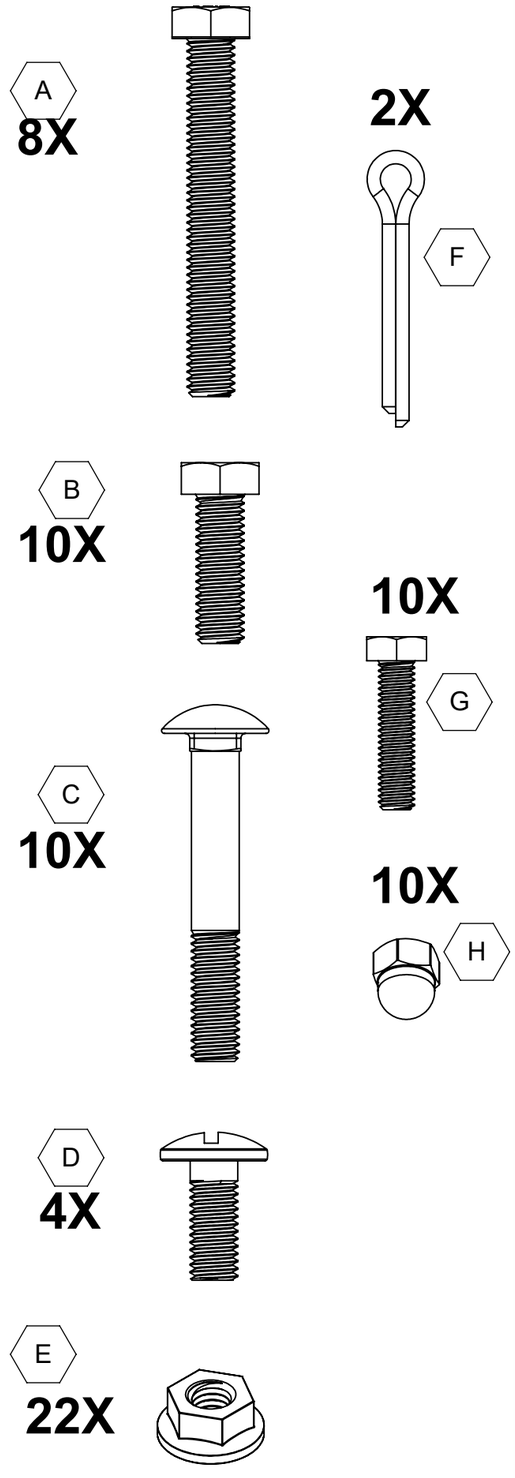

STEP:6

Assemble as shown
TIGHTEN ALL

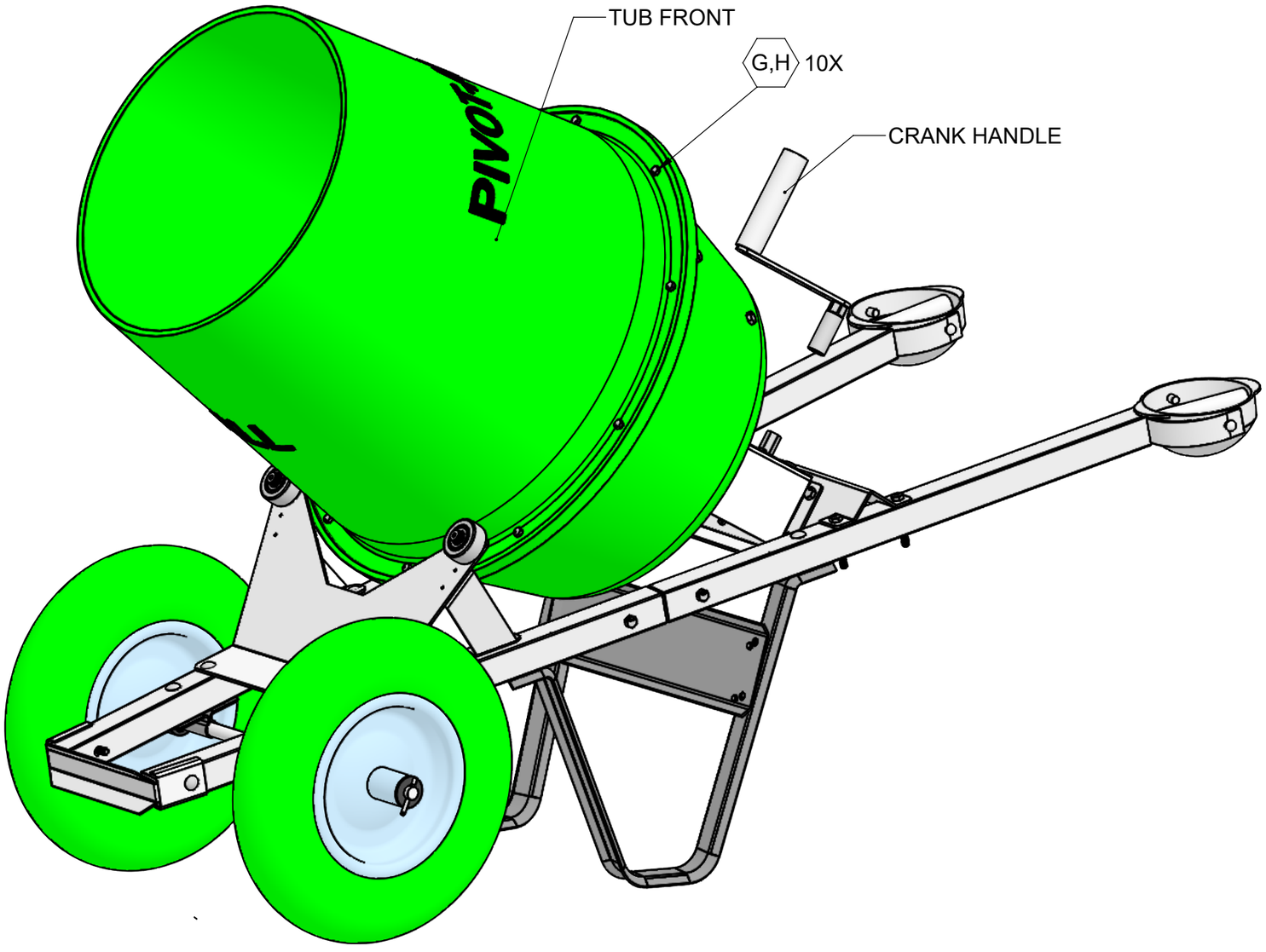

A
8X



2X

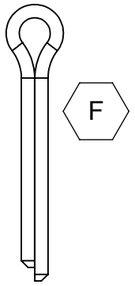

B
10X

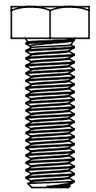

10X

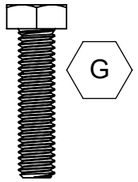

C
10X

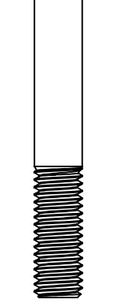

10X

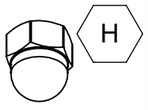

D
4X

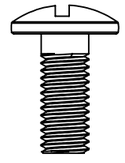

E
22X

