*Data extrapolated from 11-24 Boeing Wind Tunnel testing and mechanical BallastRack hydraulic load testing.



IR BladderBallast™ Mounting:

Minimum Ballast Weight Per Rack Frame Section: ***525lbs***
- Uses IR BladderBallast 105 gallon water storage bladder for ballast weight. Use our standard EarthBallast Kitandthen place the bladderb ags in between each framesection on top of the geotextile fabric.
- Bladder bags can be substituted with CMU blocks or sand bags as long as minimum weight requirement is met.
- 3/4 x 12" steel concrete forming stakes recommended at the ends of each rack frame base tube.

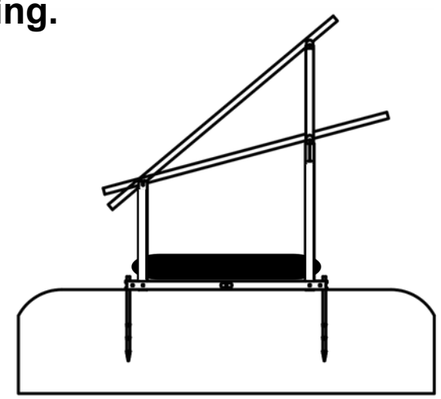

IR EarthBallast™ System:

Minimum Soil/Crushed Stone Per Rack Frame Section: ***1200lbs***
Base of Earth Fill Mound: ***60" Wide***
Top of Earth Fill Mound: ***18" High (Crushed Stone) / 22" High (Compacted Soil)***
Center of Ear thFillMount: ***6" Offset Towards Rear Leg***
- 3/4 x 12" steel concrete forming stakes recommended at the ends of each rack frame base tube.

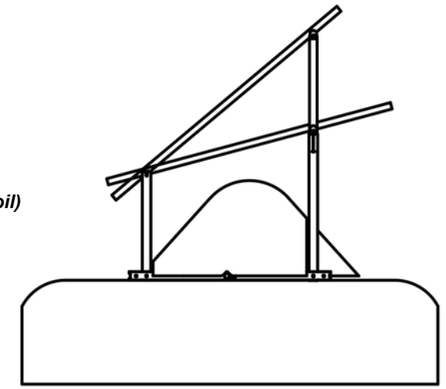

IR EarthScrew™ System:

Minimum Uplift Test Per EarthScrew:***1200lbs***
Maximum Frost Depth: ***20"***
- One EarthScrew installed at the ends of each rack frame base tube.
- Medium to high density compacted soil required.
- Not recommended for use in rocky soil or loose sand.

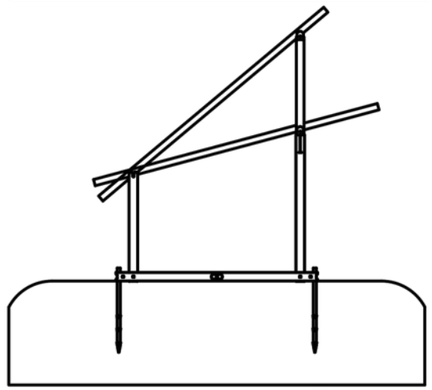

IR SlabBallast™ System:

Minimum Ballast Weight Per Rack Frame Section: ***1200lbs***
- Base tubes can be directly bolted to concrete patio, driveway, or SlabBallast.The rack frames can also be directly bolted to a shipping container or on top of steel beams.

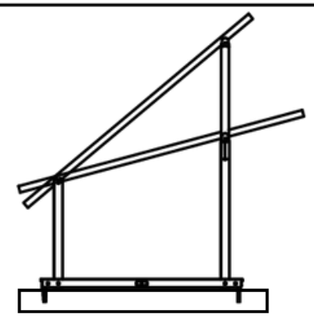

*Images shown at 15 and 40 degrees positions

All analysis and information provided in the datasheet tables comply with ASCE/SEI 7-22 "Wind and Other Structures", as well as Section 31.4.5 "Limitations on Wind Loads for Ground-Mounted Fixed-Tilt Solar Panel Systems" by the American Society of Civil Engineers.

PROJECT
IntegraRack

TITLE
IR-40FSAA / FSAB / FSAC Solar Racking System Data Sheet

IR-40FSAA0041, IR-40FSAB0040, IR-40FSAC0042

APPROVED Paul Budge 2/21/2025	SIZE	CODE	DWG NO	REV	
CHECKED Paul Budge 2/21/2025	B		V3-1026		
DRAWN Jeff Glauser 2/21/2025	SCALE 1:20	WEIGHT 11lbs / 22lbs / 18lbs			

***If the high end of the outer perimeter racks are not protected by homes, walls, or other structures, additional ballasting may be required to reach or exceed 160 mph winds. Please consult with a local engineer when designing a system for hurricane force wind loads.**

Maximum Snow Load for All Angles	
Module sizeupto24sqft	**Modulesizeup to 34 sqft**
100 psf	65psf

15 Degree Angle		
Maximum Wind Speed		
	Module size up to 24 sqft	**Module size up to 34 sqft**
IR BladderBallast™	100 mph	85 mph
IR EarthBallast™	*160 mph	*140 mph
IR EarthScrew™	*160 mph	*140 mph
IR SlabBallast™	*160 mph	*140 mph

20 Degree Angle		
Maximum Wind Speed		
	Module size up to 24 sqft	**Module size up to 34 sqft**
IR BladderBallast™	90 mph	80 mph
IR EarthBallast™	*150 mph	130 mph
IR EarthScrew™	*150 mph	130 mph
IR SlabBallast™	*150 mph	130 mph

25 Degree Angle		
Maximum Wind Speed		
	Module size up to 24 sqft	**Module size up to 34 sqft**
IR BladderBallast™	85 mph	75 mph
IR EarthBallast™	135 mph	115 mph
IR EarthScrew™	135 mph	115 mph
IR SlabBallast™	135 mph	115 mph

30 Degree Angle		
Maximum Wind Speed		
	Module size up to 24 sqft	**Module size up to 34 sqft**
IR BladderBallast™	80 mph	70 mph
IR EarthBallast™	120 mph	110 mph
IR EarthScrew™	120 mph	110 mph
IR SlabBallast™	120 mph	110 mph

35 Degree Angle		
Maximum Wind Speed		
	Module size up to 24 sqft	**Module size up to 34 sqft**
IR BladderBallast™	75 mph	65 mph
IR EarthBallast™	115 mph	100 mph
IR EarthScrew™	115 mph	100 mph
IR SlabBallast™	115 mph	100 mph

40 Degree Angle		
Maximum Wind Speed		
	Module size up to 24 sqft	**Module size up to 34 sqft**
IR BladderBallast™	70 mph	60 mph
IR EarthBallast™	110 mph	95 mph
IR EarthScrew™	110 mph	95 mph
IR SlabBallast™	110 mph	95 mph

Measurements in inches

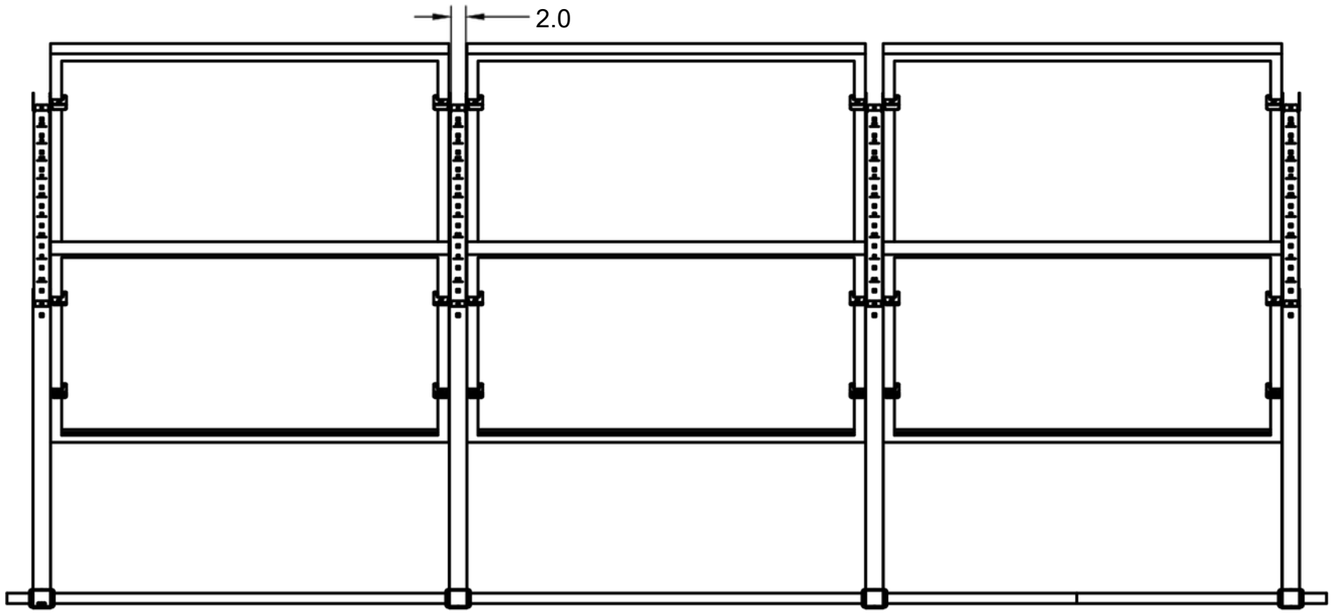

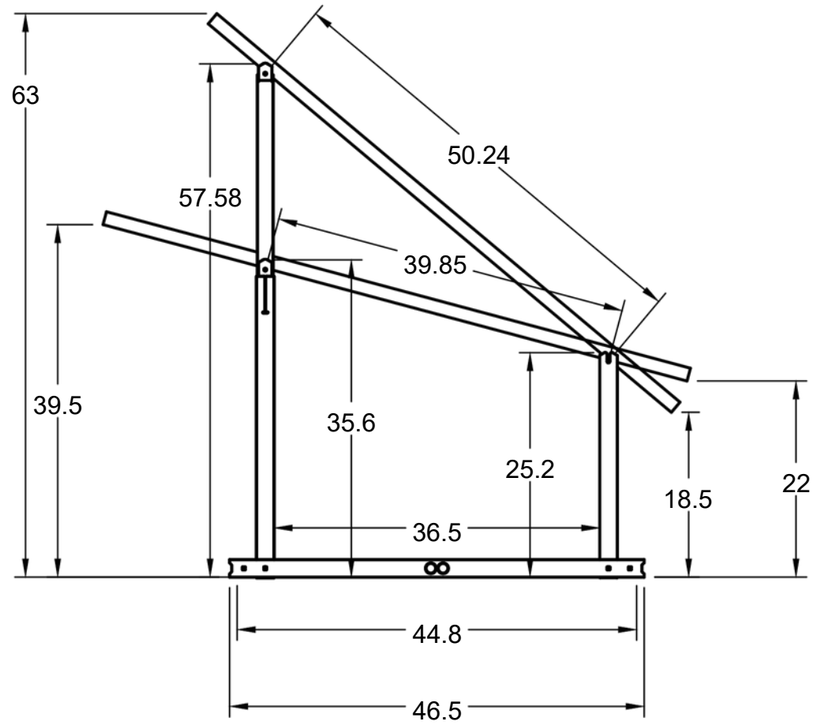

EarthScrew hole-to-hole dimension: 44.8 inches

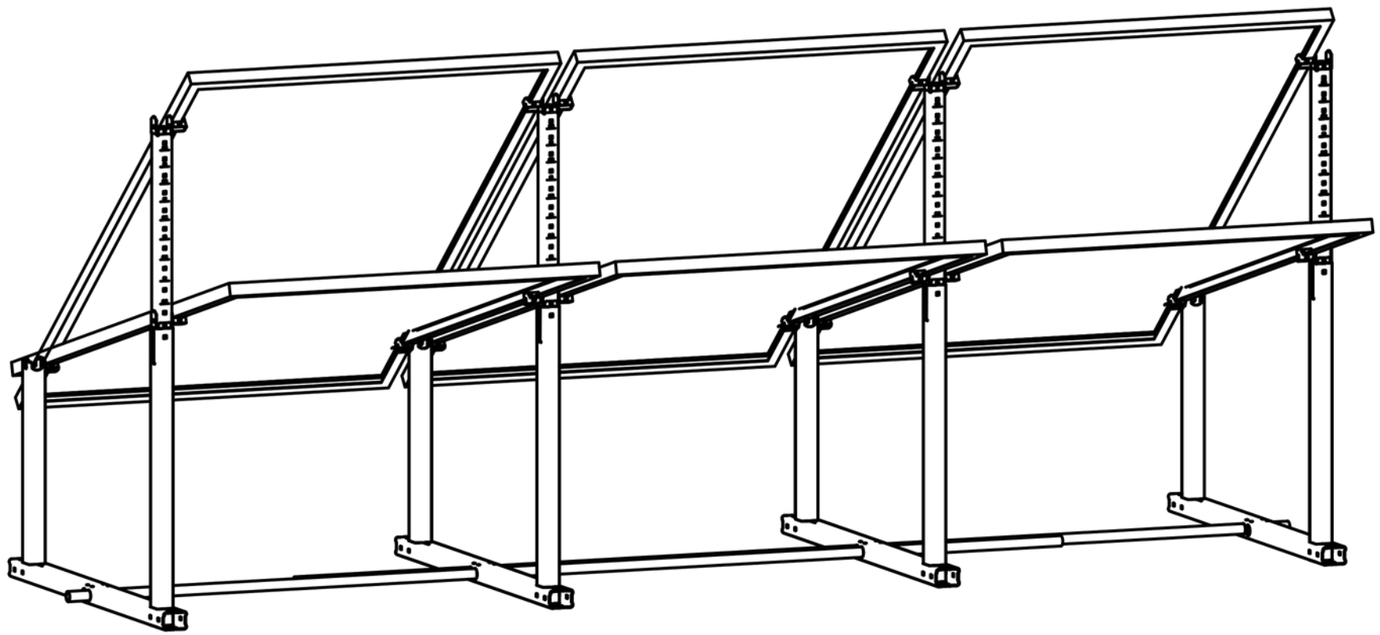

Height off the ground and space between frames will vary based on module size and adjusment angle. (Solar module size represented is 44.7"x67.8")

***Images shown at 15 and 40 degrees positions**

REQUIRED SPACING BETWEEN ROWS	
15 degrees	11 feet 6 inches / 3.5 meters ON CENTER
20 degrees	12 feet 2 inches / 3.7 meters ON CENTER
25 degrees	12 feet 10 inches / 3.9 meters ON CENTER
30 degrees	13 feet 6 inches / 4.1 meters ON CENTER
35 degrees	13 feet 10 inches / 4.2 meters ON CENTER
40 degrees	14 feet 2 inches / 4.3 meters ON CENTER

***Images shown at 15 and 45 degrees positions**

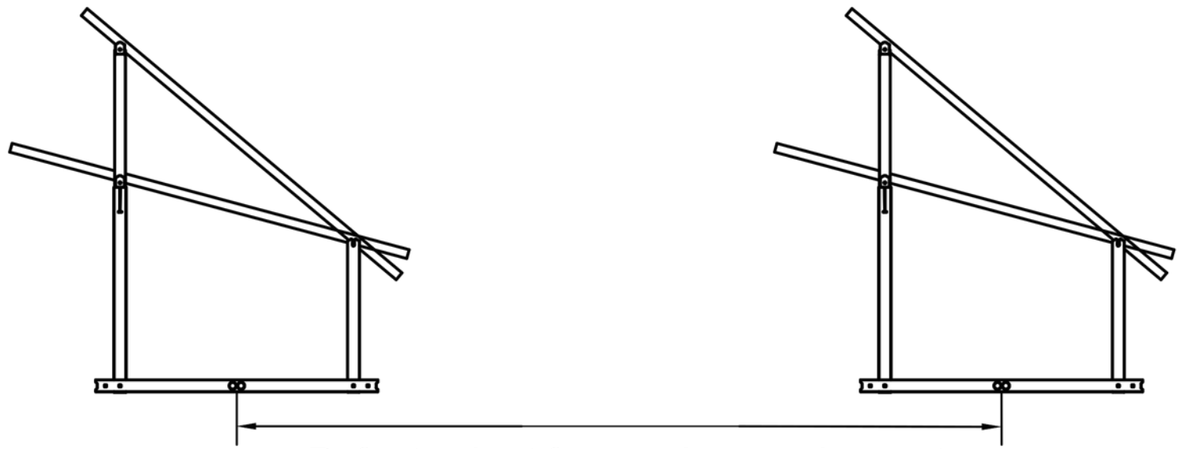

Refer to chart for spacing requirements

Row spacing provided is a general guideline only. Please check sun angles in your local region.

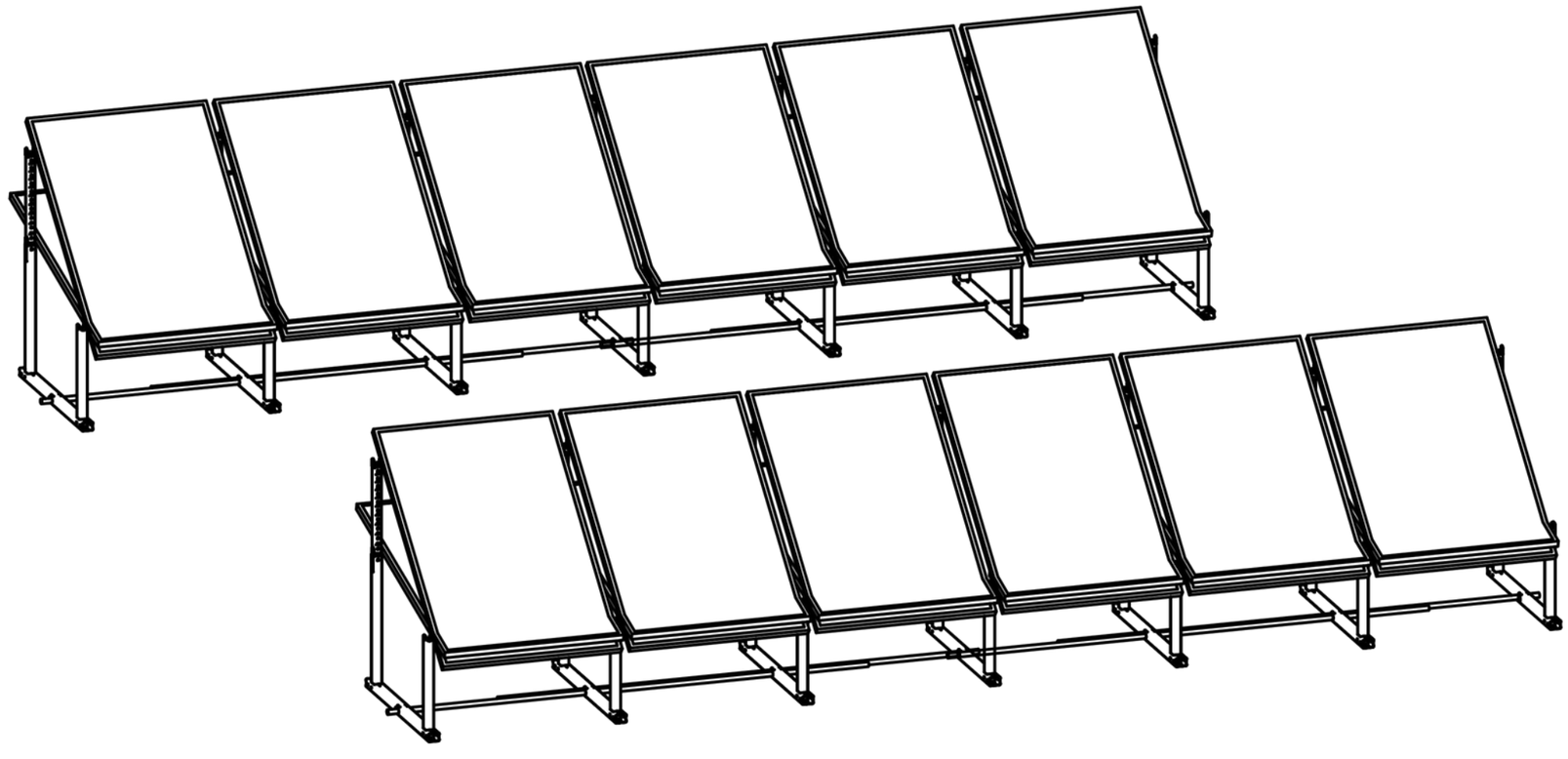

***The measurements listed above are from the center point of each base tube.**

PNL
An ABS Company
Phoenix National Laboratories, LLC
941 S. Park Lane, Tempe, AZ 85281
P: 602.431.8887 • www.pnltest.com

LABORATORY TEST REPORT

PNL REF. # 26-260741 **S.O. #** 001 **INDEX** 01
TEST DATE 05/22/2026

CLIENT

Name	Diversi-Tech Corporation	**Client Order No.**	Per SA
	615 N 3050 E Ste A1	**Project Name**	Lateral Load Test of IntegraRack IR-EW15
	St. George, Utah 84790	**Service Location**	PNL Lab - 941 S. Park Lane, Tempe, AZ 85281

TEST DETAILS

Technician	Kyle Fleege	**Code or Standard**	None
Description	Simulated lateral wind load test of IntegraRack IR-EW15 BallastRack (East/West 15 Fixed Angle Double Solar Panel Rack)	**Procedure/Specification**	Custom
		Quality Requirements	Record load and observations

TEST CONDITIONS, EQUIPMENT & CALIBRATION DATA

Temperature	80 °F ± 5 °F (23 °C ± 2 °C)	**Humidity**	50 % ± 10 %
Load Cell/SN	MSI-7300RF	**Calibration Date**	05/15/2026

TEST SPECIMEN

(1) Integra-Rack EW15 BallastRack System with (2) solar panels installed.

TEST DATA - LATERAL LOAD

Test Run	Max. Load (lbf)	Observations
1	1010	No deformation or failures noted.
2	1540	Solar panel frame is permanently deformed.

TEST SUMMARY

The Integra-Rack East-West 15 BallastRack system (IR-EW15) was bolted down to a flat trailer bed. Two 41 in. solar panels were installed into the frame using two IR-F2 clamps on each side of the solar panel. Red load application frames were installed on each solar panels using three IR-F2 clamps on each side of the panels (Photos 1-11).

A lateral load was slowly applied to the test frame and solar panels. An initial load of 1010 lbf was applied and then released back to zero load. At zero load the frame and panels were visually inspected for any damage. No damage was found. During the second load run the lateral load reached 1540 lbf and was then released back to zero. The frame and panels were inspected and the solar panel frames were found to be yielding. There was no noted damage or yielding of the Integra-Rack EW15 frame.

Observations:

- **After a 1010 lbf test load there was no visual damage**, bending, or any other yielding or failure indications noted.
- **After a 1540 lbf test load the solar panel frame, not the IR-EW15, was permanently deformed**. There was no observed bending or yielding of the Integra-Rack EW15 frame.

TECHNICIAN Kyle Fleege

REVIEWED BY Kyle Fleege



Expires 09/30/2027

ISO/IEC 17025:2017 accredited by PJLA - Accreditation No. 71936. Results relate only to the items or portions of items presented to PNL for testing and/or inspection. This report shall not be reproduced except in full without the approval of PNL to ensure that parts of the report are not taken out of context. PNL warrants that the above services and report were performed under the appropriate standard of care in accordance with our ISO/IEC 17025:2017 quality program, including the skill and judgement that is reasonably expected from similarly situated technical personnel. No other warranty, guaranty, or representation, either expressed or implied is included or intended.

PNL
An AES Company
Phoenix National Laboratories, LLC
941 S. Park Lane, Tempe, AZ 85281
P: 602.431.8887 • www.pnltest.com

LABORATORY TEST REPORT

PNL REF. # 26-260741 **S.O. #** 001 **INDEX** 01
TEST DATE 05/22/2026

PHOTOS

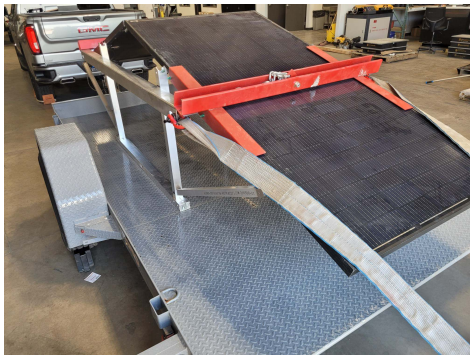

Photo 1: IR-EW15 BallastRack with 2 solar panels installed and load application frames (red)



Photo 2: IR-EW15 BallastRack with 2 solar panels installed and load application frames (red)

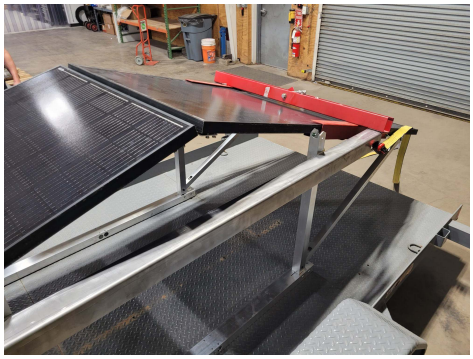

Photo 3: IR-EW15 BallastRack with 2 solar panels installed and load application frames (red)

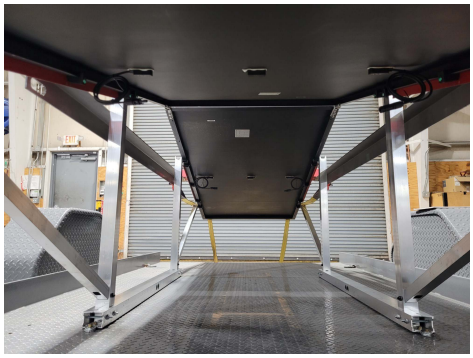

Photo 4: Underside of IR-EW15 BallastRack

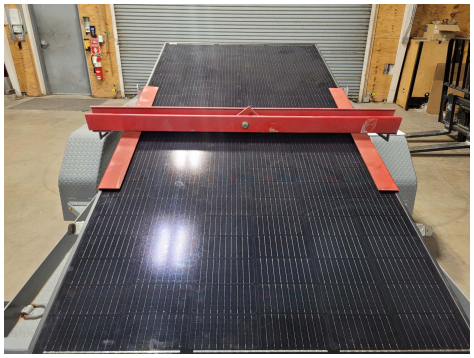

Photo 5: Load point attachment frame on solar panel

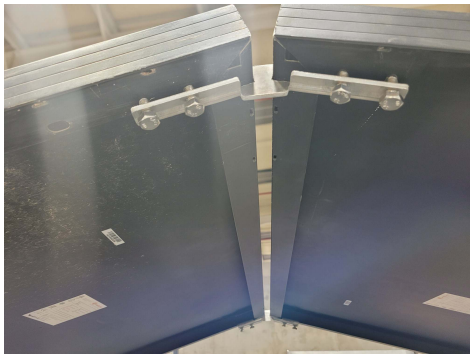

Photo 6: Brackets below solar panel at top point of the IR-EW15 frame



Photo 7: IR-EW15 frame bolted down to hold frame in place for test



Photo 8: IR-EW15 frame bolted down to hold frame in place for test

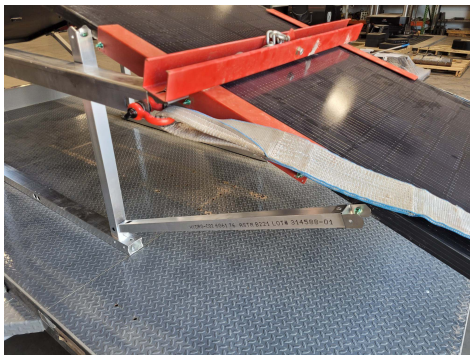

Photo 9: Load attachment points with shackle

PNL
An ALS Company
Phoenix National Laboratories, LLC
941 S. Park Lane, Tempe, AZ 85281
P: 602.431.8887 • www.pnltest.com

LABORATORY TEST REPORT

PNL REF. # 26-260741 **S.O. #** 001 **INDEX** 01
TEST DATE 05/22/2026

PHOTOS



Photo 10: Closeup of load attachment point shackle. The shackle applies load to the tube steel, the tube steel applies load to the red load frame that applies the load to the solar panels.



Photo 11: Underside of the edge attachment points of the red load frame.



Photo 12: Underside of panel at ridge prior to testing.



Photo 13: Underside solar panel at top ridgeline after 1500 lbf test load. Solar panel has started deforming at bolts and lifting off the attachment



Photo 14: Underside solar panel at top ridgeline after 1500 lbf test load. Solar panel has started deforming at bolts and lifting off the attachment



Photo 15: Underside solar panel at top ridgeline after 1500 lbf test load. Solar panel has started deforming at bolts and lifting off the attachment



Photo 16: Underside of the rest of the solar panel and frame after 1500 lbf load. No other deformation observed.



Photo 17: Top of solar panel and system after 1500 lbf test load. No deformation of the IR load frame was observed.

PNL
Phoenix National Laboratories, LLC
941 S. Park Lane, Tempe, AZ 85281
P: 602.431.8887 • www.pnltest.com

Mr. Paul Budge
Diversi-Tech Corp – IntegraRack
PO Box 910758
St. George, UT 84791

Subject: Witness of Wind Tunnel Testing on IntegraRack Products at the George E Boeing Aeronautics Department (Kirsten Wind Tunnel) at the University of Washington

Dear My. Budge,

This letter summarizes the wind tunnel testing that was witnessed at the Kirsten Wind Tunnel (KWT) on November 8th, 2024. Testing took place at KWT on the University of Washington campus at 3900 7th Ave NE, Seattle, WA. Cara Winter was the manager of the facility and testing was performed and overseen by Test Engineers Stuart Dickson and Miguel Salguero. A detailed analysis and calculations of test data is outside the purview of this report and can be provided by KWT personnel.

The wind tunnel data summarized in this report, mechanical material stress testing and solar mount adhesion testing performed by PNL, and simulated wind/snow load model data was extrapolated on product datas sheets by IntegraRack for various product configurations and solar angles for the following IntegraRack solar panel products: TileBallast, BallastRack, BallastRack DR, MultiBallast, MultiBallast DB, H Module Brack, and the IR-F2 Bonding Clamp.

A total of 8 runs were performed on IntegraRack products. Test Runs 1 through 3 were performed with the IR-D1 bracket (See Figures 1-4) with an installed 18 SF solar panel on a simulated roof incline. Run 1 was performed to tare KWT's system through the full 0 to 110 degree rotation of the test platform with the simulated roof and panel installed. The roof surface had been installed at an approximate 5 – 6 degree incline (See Figure 1). The solar panel was mounted at 0 degrees relative to the roof surface with a general height of 5 in from the roof surface. at all four corners of the panel. Test Runs 4 and 5 were performed on the same panel and bracket with the panel height adjusted and installed at an angle with the front corners set to 3-1/2 in. and the back corners set to a height of 6 in. from the roof surface.

Test Runs 2 through 5 included rotating the test setup from 0 to 110 degrees while KWT instrumentation recorded test data. Wind speed was increased until limitations of KWT instrumentation prevented it from being increased further. Four load cells, Omega model LC103B-250 lb Class N10, were installed between the IntegraRack bracket and the roof surface to monitor and record loads applied to the brackets throughout testing (See Figures 5-10). The load cells were labeled LC0-1, LC0-2, LC5-3, and LC5-4 with LC0 being installed at the leading edge and LC5 being installed at the back edge.

The maximum load at a bracket recorded during Test Runs 2 and 3 was 75.015 lbf at a wind speed of 157.67 MPH when the panel was at a rotation point of 60 degrees. No damage or deformation was noted

PNL
Phoenix National Laboratories, LLC
941 S. Park Lane, Tempe, AZ 85281
P: 602.431.8887 • www.pnltest.com

to any bracket during or after the test runs and all hardware was found to be secure upon completion of each test (See Figures 11-13).

Test Runs 6 through 8 were performed on the IR Ballast Racks (See Figures 14-32). The simulated roof structure was removed and the frames and panel were mounted directly to the KWT test platform. These runs were performed at a set angle with no platform rotation during the test run. Two load cells were used for the test setups and were mounted at the brackets at the leading edge of the test platform at the wind intake side.

Run 6 was performed on the IR18C with the solar panel at an approximate 18 degree angle (Figures 24-25). The maximum load at a bracket recorded during Test Run 6 was 168.59 lbf at a wind speed of 101.59 MPH. Runs 7 and 8 were performed on the IR30C with the solar panel at a 30 degree angle (Figures 30-32) with Run 7 having the solar panel mounted and aligned with the wind direction to produce maximum forces on the frame and Run 8 being run in an orientation 90 degrees offset from Run 7. The maximum load at a bracket was during Test Run 7 and was 183.38 lbf at a wind speed of 81.138 MPH. Run 7 was stopped when the drag limit of the KWT test apparatus was reached. The solar frame experienced shaking under wind load but no damage was found to any part and all bolts were found to still be tight and in place after the test run. Run 8 was pitch limited by the KWT test apparatus. Similar to Run 7 the frame and solar panel had experienced shaking under load but no damage to the frame or panel was noted and all bolts and connections remained tight.

Test data tables provided by KWT and photos of testing throughout the Test Runs have been attached.

Respectfully submitted,

PHOENIX NATIONAL LABORATORIES, LLC



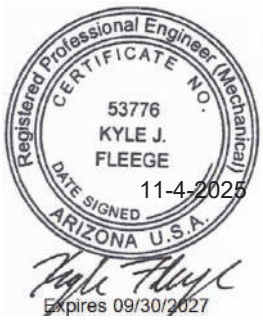

Kyle Fleege, P.E.
Project Manager / Mechanical Engineer
Phoenix National Laboratories
Ph: 1.602.431.8887
kyle@pnltest.com
www.pnltest.com

PNL
Phoenix National Laboratories, LLC
941 S. Park Lane, Tempe, AZ 85281
P: 602.431.8887 • www.pnltest.com

Test data tables provided by Kirsten Wind Tunnel tests are shown below:

RUN	TEST	TP	PSI	QA	QC	SPEEDMPH	LC0-1	LC0-2	LC5-3	LC5-4	DB	LB
2	2379	3	0.0001	16.775	17.799	84.38	1.1732	0.9254	12.114	13.537	0	0
2	2379	4	9.9998	16.676	17.693	84.13	3.3832	0.1309	13.25	12.918	0	0
2	2379	5	20	16.788	17.813	84.414	6.5054	-1.2426	14.882	15.703	0	0
2	2379	6	30	14.846	15.752	79.391	8.6943	-2.5876	11.917	15.932	0	0
2	2379	7	40	15.216	16.144	80.374	10.566	-3.614	9.2887	17.334	0	0
2	2379	8	50	15.91	16.881	82.19	12.154	-4.7729	5.8138	18.225	0	0
2	2379	9	60	17.543	18.614	86.311	15.831	-4.7168	3.432	19.871	0	0
2	2379	10	70	18.075	19.177	87.609	15.929	-2.9647	1.6713	17.613	0	0
2	2379	11	80	19.807	21.015	91.718	16.576	-0.2715	1.6043	16.188	0	0
2	2379	12	90	26.487	28.103	106.081	20.349	2.4846	2.6014	20.856	0	0
2	2379	13	100	27.443	29.117	107.995	23.246	3.9239	1.6397	26.417	0	0
2	2379	14	110	28.046	29.758	109.19	30.304	4.9443	0.4954	31.084	0	0

PNL
Phoenix National Laboratories, LLC
941 S. Park Lane, Tempe, AZ 85281
P: 602.431.8887 • www.pnltest.com

Test data tables provided by Kirsten Wind Tunnel tests are shown below:

RUN	TEST	TP	PSI	QA	QC	SPEEDMPH	LC0-1	LC0-2	LC5-3	LC5-4	DB	LB
3	2379	2	-0.0001	46.765	49.618	141.561	1.1642	2.3972	36.627	39.938	0	0
3	2379	3	10	47.13	50.006	142.153	7.9853	-0.2581	42.362	39.215	0	0
3	2379	4	20	48.375	51.327	144.054	17.809	-5.1282	48.033	50.868	0	0
3	2379	5	30	50.382	53.456	147.043	28.671	-12.013	46.107	61.281	0	0
3	2379	6	40	52.966	56.198	150.773	36.485	-22.577	33.65	68.344	0	0
3	2379	7	50	54.38	57.698	152.791	44.03	-28.356	17.304	72.349	0	0
3	2379	8	60	57.878	61.409	157.674	56.195	-27.306	4.63	75.015	0	0
3	2379	9	70	56.226	59.656	155.402	54.153	-16	-2.0357	62.293	0	0
3	2379	10	80	53.778	57.059	151.975	48.502	-4.0685	-2.0692	49.307	0	0
3	2379	11	90	57.92	61.454	157.771	47.213	3.5417	-0.5077	50.257	0	0
3	2379	12	100	54.454	57.777	152.979	46.905	6.1752	-4.2226	55.18	0	0
3	2379	13	110	36.199	38.408	124.779	34.937	5.9472	-9.3307	38.454	0	0

PNL
Phoenix National Laboratories, LLC
941 S. Park Lane, Tempe, AZ 85281
P: 602.431.8887 • www.pnltest.com

Test data tables provided by Kirsten Wind Tunnel tests are shown below:

RUN	TEST	TP	PSI	QA	QC	SPEEDMPH	LC0-1	LC0-2	LC5-3	LC5-4	DB	LB
5	2379	3	0.0003	14.845	15.03	77.742	43.468	45.917	33.192	35.332	0	0
5	2379	4	10	14.115	14.291	75.806	39.406	45.863	32.548	33.352	0	0
5	2379	5	20	14.301	14.479	76.302	41.216	49.171	36.107	33.865	0	0
5	2379	6	30	15.476	15.669	79.377	43.323	49.791	40.199	30.547	0	0
5	2379	7	40	15.792	15.989	80.181	40.37	44.513	37.812	28.348	0	0
5	2379	8	50	15.441	15.633	79.284	34.815	34.07	29.669	27.254	0	0
5	2379	9	60	14.604	14.787	77.107	25.852	21.071	18.666	23.403	0	0
5	2379	10	70	15.452	15.644	79.315	19.532	11.214	10.48	19.561	0	0
5	2379	11	80	15.788	15.985	80.173	13.097	5.1532	4.4544	14.183	0	0
5	2379	12	90	15.937	16.136	80.55	10.261	2.0128	0.5043	11.748	0	0
5	2379	13	100	14.945	15.131	77.998	9.7597	-1.4293	-4.2425	10.805	0	0
5	2379	14	110	15.231	15.421	78.745	10.539	-5.6497	-13.113	8.2362	0	0

PNL
Phoenix National Laboratories, LLC
941 S. Park Lane, Tempe, AZ 85281
P: 602.431.8887 • www.pnltest.com

Test data tables provided by Kirsten Wind Tunnel tests are shown below. Blockage corrections to calculate DB and LB ARE APPROXIMATION and were provided by KWT Test Engineers using a simplified version of Shindo's method, outlined in "Simplified Tunnel Correction Method" by Shojiro Shindo, American Institute of Aeronautics and Astronautics, Inc.< Washington DC, 1994: Journal of Aircraft Volume 32, Number 1, Pages 210-213. LB is the lift value and DB is the drag value after wind-off zero values have been subtracted.

RUN	TEST	TP	PSI	QA	QC	SPEEDMPH	LC0-1	LC0-2	LC5-3	LC5-4	DB	LB
6	2379	2	-0.0006	19.964	25.663	101.585	-206.622	-168.586	0.6796	0	244.379	363.911
6	2379	3	-0.0005	19.922	25.611	101.499	-206.361	-167.906	0.5212	0.0001	243.946	363.13
6	2379	4	-0.0005	18.132	23.265	96.748	-185.481	-146.788	-0.5698	0	220.212	326.42
6	2379	5	-0.0004	14.927	19.087	87.632	-146.747	-110.624	1.6089	0	178.639	262.798
6	2379	6	-0.0004	10.021	12.738	71.584	-89.117	-53.252	1.1724	-0.0001	116.858	169.83

PNL
Phoenix National Laboratories, LLC
941 S. Park Lane, Tempe, AZ 85281
P: 602.431.8887 • www.pnltest.com

Test data tables provided by Kirsten Wind Tunnel tests are shown below. Blockage corrections to calculate DB and LB ARE APPROXIMATION and were provided by KWT Test Engineers using a simplified version of Shindo's method, outlined in "Simplified Tunnel Correction Method" by Shojiro Shindo, American Institute of Aeronautics and Astronautics, Inc.< Washington DC, 1994: Journal of Aircraft Volume 32, Number 1, Pages 210-213. LB is the lift value and DB is the drag value after wind-off zero values have been subtracted.

RUN	TEST	TP	PSI	QA	QC	SPEEDMPH	LC0-1	LC0-2	LC5-3	LC5-4	DB	LB
7	2379	2	-0.0001	10.101	16.001	80.229	-165.145	-179.17	-0.0654	0	239.012	297.932
7	2379	3	0	10.304	16.363	81.138	-170.329	-183.382	1.6992	0	245.281	304.603
7	2379	4	0	4.9808	7.7789	55.942	-70.106	-82.668	1.1755	0	113.803	142.75

RUN	TEST	TP	PSI	QA	QC	SPEEDMPH	LC0-1	LC0-2	LC5-3	LC5-4	DB	LB
8	2379	2	90.001	10.165	11.329	67.503	-1.1756	-7.5189	-1.3941	0	51.808	28.96
8	2379	3	90	15.002	16.716	81.993	-13.771	-17.132	0.1391	0	76.302	40.688
8	2379	4	90	17.966	20.011	89.723	-21.883	-23.854	0.307	0	91.033	50.149
8	2379	5	90	24.873	27.701	105.599	-45.078	-38.33	-0.174	0	125.875	68.707
8	2379	6	90	27.029	30.099	110.103	-53.423	-43.1	0.5537	0	136.673	76.038
8	2379	7	90	31.751	35.352	119.364	-71.986	-54.265	-0.7512	0	160.314	91.156
8	2379	8	90	39.784	44.294	133.708	-102.541	-76.2	0.5756	0	200.798	112.886

PNL
Phoenix National Laboratories, LLC
941 S. Park Lane, Tempe, AZ 85281
P: 602.431.8887 • www.pnltest.com

PHOTOS



Figure 1: Run 1 through 3 simulated roof setup

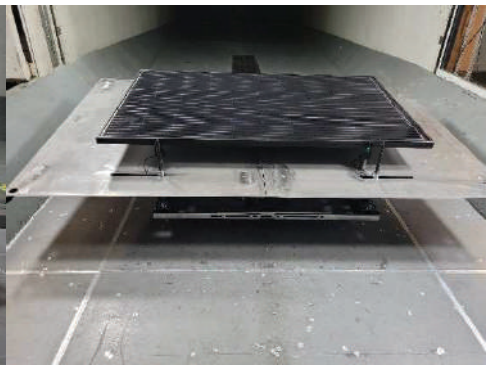

Figure 2: Run 1 through 3 setup with panel



Figure 3: Bracket at leading edge LC0-1, LC0-2

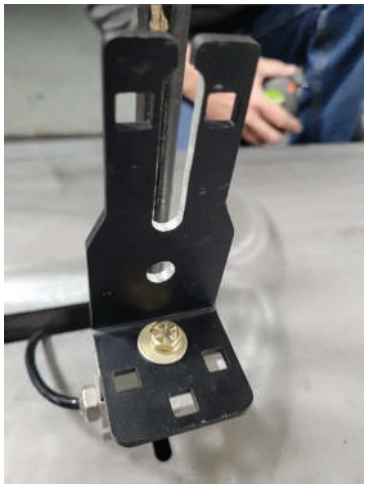

Figure 4: Bracket at back edge LC5-3, LC5-4

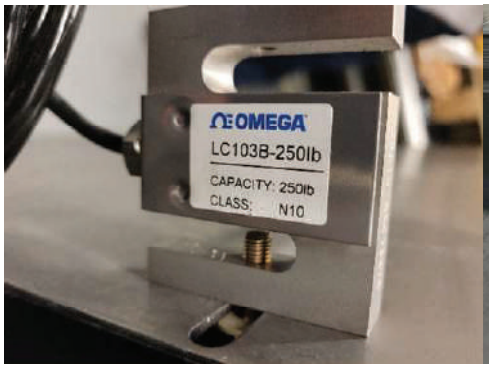

Figure 5: Load Cell Model used for tests

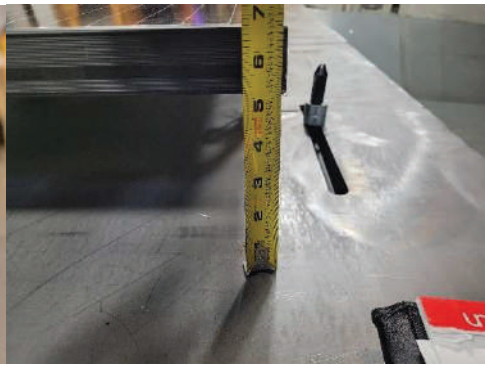

Figure 6: Height from roof to panel, Runs 2 & 3



Figure 7: LC0-1 Location



Figure 8: LC0-2 Location



Figure 9: LC5-3 Location

PNL
Phoenix National Laboratories, LLC
941 S. Park Lane, Tempe, AZ 85281
P: 602.431.8887 • www.pnltest.com

PHOTOS



Figure 10: LC5-4 Location

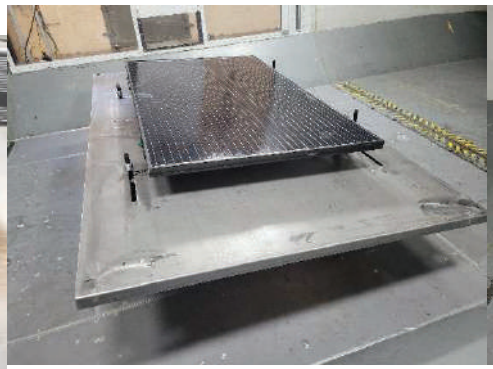

Figure 11: Setup after Run 2, 109 mph winds. No damages or loose hardware noted.



Figure 12: Setup after Run 2, 109 mph winds. No damages or loose hardware noted



Figure 13: Setup after Run 2, 109 mph winds. No damages or loose hardware noted



Figure 14: Setup for Run 6 with IR Ballast Frame

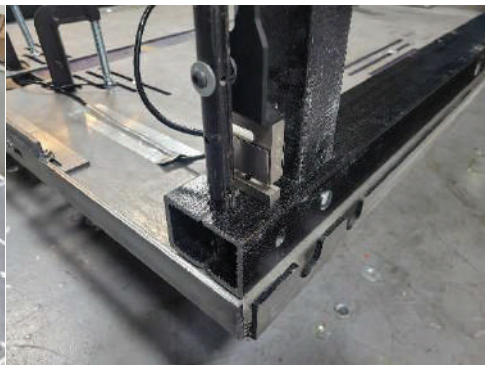

Figure 15: Load cell location at leading edge, LC0-1 & LC0-2



Figure 16: Test setup for Run 6

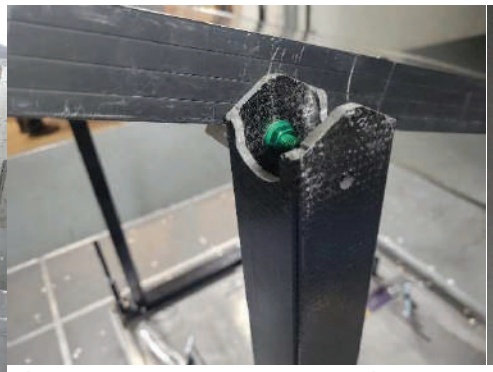

Figure 17: IR Ballast frame connection to solar panel

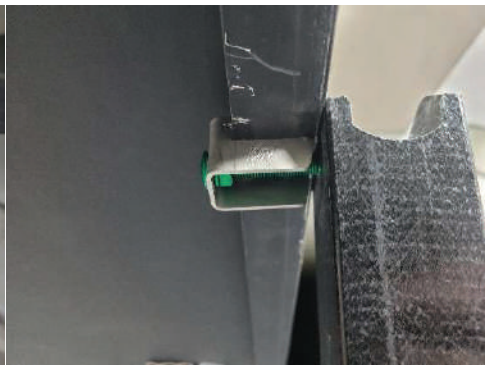

Figure 18: IR Ballast frame connection to solar panel

PNL
Phoenix National Laboratories, LLC
941 S. Park Lane, Tempe, AZ 85281
P: 602.431.8887 • www.pnltest.com

PHOTOS



Figure 19: Test setup for Run 6



Figure 20: Solar panels total length, Run 6 through 8

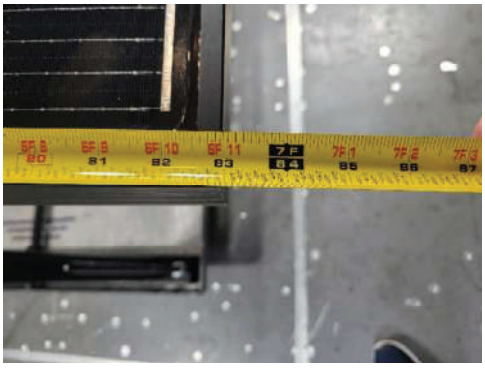

Figure 21: Solar panels total length 83 in.



Figure 22: Solar panels width, Run 6 through 8



Figure 23: Total width 41-1/4 in.



Figure 24: Run 6 trailing edge leg height



Figure 25: Run 6 leading edge leg height

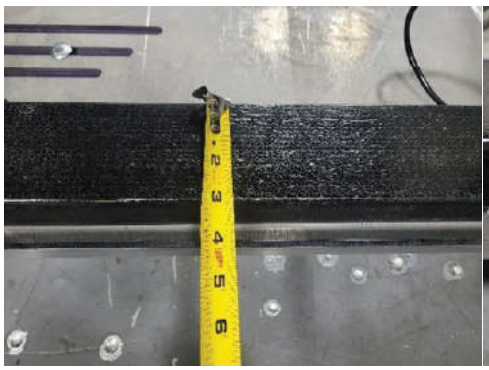

Figure 26: Frame base support width

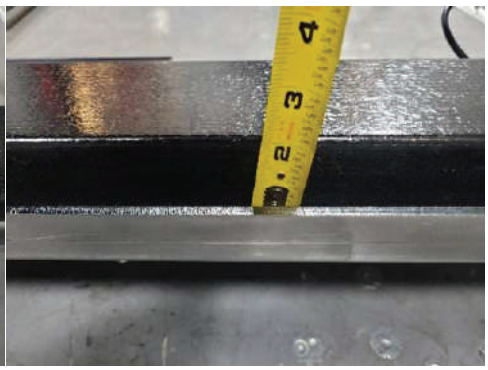

Figure 27: Frame base support height

PNL
Phoenix National Laboratories, LLC
941 S. Park Lane, Tempe, AZ 85281
P: 602.431.8887 • www.pnltest.com

PHOTOS

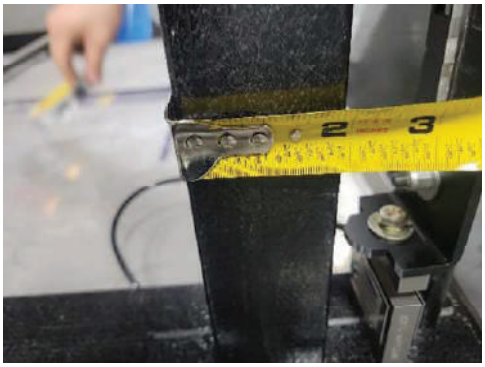

Figure 28: IR Ballast rack leg width 1



Figure 29: IR Ballast rack leg width 2



Figure 30: Runs 7 - 8 Test setup



Figure 31: Run 7 trailing edge leg height



Figure 32: Run 7 Leading edge leg height

PNL
An ITS Company
Phoenix National Laboratories, LLC
941 S. Park Lane, Tempe, AZ 85281
P: 602.431.8887 • www.pnltest.com

April 24, 2024
Mr. Paul Budge
Diversi-Tech Corp - IntegraRack
PO Box 910758
St. George, UT 84791

Subject: Simulated Wind Load, Snow Load, and Horizontal Racking Load Testing on IR-30 Solar Racking System.

Dear Mr. Budge,

Please find included our test reports for the simulated wind load (tensile load), snow load (compression load) and horizontal racking load tests of the IR-30 Solar Racking System performed on 3/20/2024 - 03/22/2024 in St. George, Utah.

The first simulated wind load test was performed on the IR-30 Solar Racking System Ground Frame that had two solar panels installed at a 30 ° angle and utilized the EarthBallast System. The load was applied via a crossbar connected to the solar panels which were then connected to the ground frame using the IR-F2 Under Mount Flange Clamp Bracket. The test was performed in two parts with the first part used ballast of two loose fill dirt loads from a skid steer, approximately 11 ft^3 total volume, and then the second part used a total of three loads for a total volume of approximately 14 ft^3. The IR-30 Solar Racking system was monitored for movement as the simulated wind load tensile force was applied. Test loads were measured using a calibrated Dyna-Link 2 Dynamometer (SN 100326, Cal. Date 10/13/2023). Test run details are shown in the table below.

SIMULATED WIND LOAD (TENSILE UPLIFT) FORCE INSPECTION DETAILS					
TEST NO.	BALLAST DETAILS		VISUAL OBSERVATIONS		
	SIZE (LxWxH) (in.)	CALCULATED WEIGHT (lbf)	UPLIFT TENSILE FORCE AT INITIAL FRAME MOVEMENT (lbf)	UPLIFT TENSILE FORCE AT FRAME AND BALLAST MOVEMENT (lbf)	MAX. FORCE REACHED (lbf)
1	96 in. x 18 in. x 11 in. (11 CF)	1100 lbf (2 skid steer buckets)	800	880	1045
2	92 in. x 42 in. x 14 in. (14 CF)	1400 lbf (3 skid steer buckets)	965	1065	1235

The horizontal racking load test was performed on the same IR-30 Solar Racking System Ground Frame that had two solar panels installed at a 30 ° angle and utililized the EarthBallast System and three loads of loose fill dirt ballast. A lifting strap was used to wrap around the panel and run parallel to the frame in order to apply the horizontal racking force. The system was monitored for movement as the simulated load was applied and the maximum load was recorded. The system held the load and no damage or permanent deformation was noted as detailed in the test observations table below.

SIMULATED HORIZONTAL RACKING FORCE INSPECTION DETAILS				
TEST NO.	BALLAST DETAILS		MAX. HORIZONTAL FORCE (lbf)	OBSERVATIONS
	SIZE (LxWxH) (in.)	WEIGHT (lbf)		
1	90 in. x 42 in. x 14 in. (14 CF)	~ 1400 lbf (3 skid steer buckets)	645	Test was stopped at 645 lbf. No damage or movement was visually noted.

The simulated snow load test was performed on a IR-30 Solar Racking System Ground Frame that was installed with two

short uprights so that the solar panel would be held parallel to the ground. The solar panel was attached to the ground frame using the IR-F2 Under Mount Flange Clamp Bracket. The load was applied using a large water tank that weighed 2410 lbf. The weight was recorded using the calibrated Dyna-Link 2 Dynamometer (SN 100326, Cal. Date 10/13/2023). The load was set on the frame and left overnight. The following day the load was increased by adding a total of twelve 5 gallon water jugs. The jugs were filled and weigh approximately 45 lbf per jug for a total weight of 2950 lbf. The frame held all loads and visual observations of the frame and components were recorded and shown in the table below.

SIMULATED SNOW LOAD (COMPRESSIVE LOAD) INSPECTION DETAILS			
	COMPRESSIVE FORCE		OBSERVATIONS
	DESCRIPTION	WEIGHT (lbf)	
1	Large water tank	2410	Solar panel held load overnight (> 10 h).
2	Large water tank + (12) five gallon jugs	2950	Solar panel held load, ~ 10 -15 minutes under observation. Slight deflections noted under load (See Photos). Minor permanent deformation noted after load removal (See Photos). The alignment tabs in the vertical uprights were no longer flat with the uprights.

The final simulated wind load test was performed on the IR-30 Solar Racking System Ground Frame that had two solar panels installed at a 30 ° angle and utililized the small IR AnchorSpikes and no earth ballast. The load was applied via a crossbar connected to the solar panels which were then connected to the ground frame using the IR-F2 Under Mount Flange Clamp Bracket. The load was applied until failure of a solar panel at 2385 lbf. Visual observations noted that the frame had visibly moved and shifted forward initially at 1500 lbf but continued to hold load as detailed in the table below.

SIMULATED WIND LOAD (TENSILE UPLIFT) FORCE INSPECTION DETAILS		
TEST NO.	MAX. FORCE (lbf)	OBSERVATIONS
1	2385	At 1500 lbf the frame visibly shifted and started to roll forward. At 2385 lbf one of the solar panels failed and shattered (Photos 7-9). The frame and brackets holding the solar panel kept it in place and were permanently deformed. The aluminum tube upright had bent forward and outward causing the seam of the tube to tear and it allowed the through bolt to come free. Two mounting brackets permanently deformed and there was additional permanent deformation in the base frame (Photos 10-15)

Test reports with additional details, photos, and data have been attached.

Respectfully submitted,
PHOENIX NATIONAL LABORATORIES, INC.

Kyle Fleege, P.E.
Project Manager / Mechanical Engineer
Phoenix National Laboratories
Ph: 1.602.431.8887
kyle@pnltest.com
www.pnltest.com



PNL
An ALS Company
Phoenix National Laboratories, LLC
941 S. Park Lane, Tempe, AZ 85281
P: 602.431.8887 • www.pnltest.com

INSPECTION AND TEST REPORT

PNL REF. # 26-240383 **S.O. #** 001 **INDEX** 03
INSPECTION DATE 03/20/2024
IR-30 Ground Frame w/ EarthBallast: Simulated Wind Load

CLIENT	CLIENT PROJECT REFERENCE	CLIENT ORDER NO.
IntegraRack	IR-30 Solar Racking System w/ Earth Ballast - Simulated Wind	per S.A.

SAMPLE DESCRIPTION	TEST LOCATION	TECHNICIANS
IR-30 Solar Racking System w/ Earth Ballast	St. George, UT	Weston A.

TEST CONDITIONS & EQUIPMENT INFORMATION

TEMPERATURE:	65 °F ± 10 °F	**HUMIDITY:**	30% ± 10%
LOAD TYPE:	Simulated Wind Load - Tensile / Uplift	**TEST LOAD:**	Record
EQUIPMENT TYPE:	Dyna-Link 2 Dynamometer MSI-7300RF	**S/N & CALIBRATION DATE:**	S/N 100326; CAL 10/13/2023
SKID STEER MODEL:	Kubota SSV65		

TEST SPECIMEN & COMPONENT INFORMATION

TEST SPECIMEN:	IR-30 Solar Racking System	**ID NO.:**	IR-30RF1000
SOLAR PANELS SIZE:	39.25 in. x 66 in.	**TEST SPECIMEN AREA:**	17.989 ft^2
SYSTEM COMPONENT 1:	IRF2 Under Mount Flange Clamp Bracket	**PART NO. 1:**	IR-FCCM0500
SYSTEM COMPONENT 2:	Large IR-30 Frame Upright	**PART NO. 2:**	IRP-30LL1000-T
SYSTEM COMPONENT 3:	Small IR-30 Frame Upright	**PART NO. 3:**	IRP-30SL1000-T
SYSTEM COMPONENT 4:	IR-30 Base Tube	**PART NO. 4:**	IRP-30BT1000-T
SYSTEM COMPONENT 5:	Connecting Rod	**PART NO. 5:**	None - 1" EMT pipe

SIMULATED WIND LOAD (TENSILE UPLIFT FORCE) TEST PROCEDURE/DESCRIPTION

The IR-30 Solar Racking System Ground Frame was installed with two solar panels and the IR EarthBallast System. The system utilizes a mesh that is epoxied to the frame which is then loaded with dirt (ballast) that supports and holds down the frame (Photo 3). The system was tested with 2 Kubota SSV75 skid steer loads of dirt loaded for Test 1 and 3 loads for Test 2. Load was applied via a red crossbar that was fastened to the edges of the solar panel frames that was connected to the ground frame via the IRF2 Under Mount Flange Clamp Bracket. The skid steer dirt loads were estimated at approximately 500 lbf each using an estimated 100 lb/ft^3 for the density of the soil. The actual density of the soil is unknown.

The solar panels were set at an approximate 30° angle. The tensile force was applied upwards and away, at a perpendicular angle from the solar panels using the skid steer (Photo 4). Load was monitored with the digital dynamometer. Load was recorded when an initial shift of the solar panel frame was noted and when the shift was large enough to cause visual changes to the frame and in the ballast surface (Photos 5-13).

SIMULATED WIND LOAD (TENSILE UPLIFT) FORCE INSPECTION DETAILS

TEST NO.	BALLAST DETAILS		VISUAL OBSERVATIONS		
	SIZE (LxWxH) (in.)	CALCULATED WEIGHT (lbf)	UPLIFT TENSILE FORCE AT INITIAL FRAME MOVEMENT (lbf)	UPLIFT TENSILE FORCE AT FRAME AND BALLAST MOVEMENT (lbf)	MAX. FORCE REACHED (lbf)
1	96 in. x 18 in. x 11 in. (11 CF)	1100 lbf (2 skid steer buckets)	800	880	1045
2	92 in. x 42 in. x 14 in. (14 CF)	1400 lbf (3 skid steer buckets)	965	1065	1235

TECHNICIAN Weston Allen

REVIEWED BY Kyle Flagg

ISO/IEC 17025:2017 accredited by PJLA - Accreditation No. 71936. Results relate only to the items or portions of items presented to PNL for testing and/or inspection. This report shall not be reproduced except in full without the approval of PNL to ensure that parts of the report are not taken out of context. PNL warrants that the above services and report were performed under the appropriate standard of care in accordance with our ISO/IEC 17025:2017 quality program, including the skill and judgement that is reasonably expected from similarly situated technical personnel. No other warranty, guaranty, or representation, either expressed or implied is included or intended.

PNL
An ATS Company
Phoenix National Laboratories, LLC
941 S. Park Lane, Tempe, AZ 85281
P: 602.431.8887 • www.pnltest.com

INSPECTION AND TEST REPORT

PNL REF. # 26-240383 **S.O. #** 001 **INDEX** 03
INSPECTION DATE 03/20/2024
IR-30 Ground Frame w/ EarthBallast: Simulated Wind Load

CLIENT	CLIENT PROJECT REFERENCE	CLIENT ORDER NO.
IntegraRack	IR-30 Solar Racking System w/ Earth Ballast - Simulated Wind	per S.A.
SAMPLE DESCRIPTION	**TEST LOCATION**	**TECHNICIANS**
IR-30 Solar Racking System w/ Earth Ballast	St. George, UT	Weston A.

PHOTOS



PHOTO 1: Dynamometer used to record loads

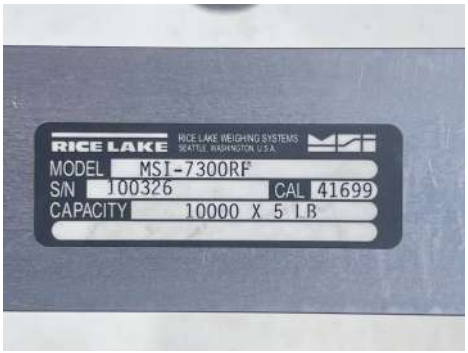

PHOTO 2: Dynamometer ID label



PHOTO 3: Test setup - IR-30 Solar Racking System with red test cross frame



PHOTO 4: Test setup with dynamometer and chains connected



PHOTO 5: Test 1 - Evidence of ballast shift



PHOTO 6: Test 1 - Load at ballast shift



PHOTO 7: Test 1 - Max load

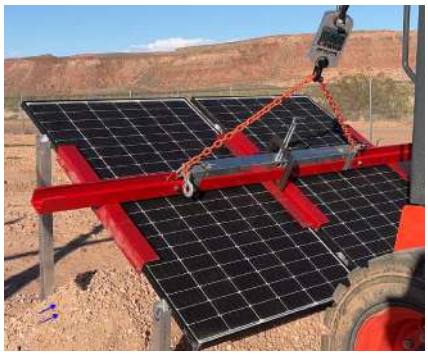

PHOTO 8: Test 2 - Evidence of ballast shift



PHOTO 9: Test 2 - Evidence of ballast shift

PNL
An AIS Company
Phoenix National Laboratories, LLC
941 S. Park Lane, Tempe, AZ 85281
P: 602.431.8887 • www.pnltest.com

INSPECTION AND TEST REPORT

PNL REF. # 26-240383 **S.O. #** 001 **INDEX** 03
INSPECTION DATE 03/20/2024
IR-30 Ground Frame w/ EarthBallast: Simulated Wind Load

CLIENT	CLIENT PROJECT REFERENCE	CLIENT ORDER NO.
IntegraRack	IR-30 Solar Racking System w/ Earth Ballast - Uplift Force	per S.A.
SAMPLE DESCRIPTION	**TEST LOCATION**	**TECHNICIANS**
IR-30 Solar Racking System w/ Earth Ballast	St. George, UT	Weston A.

PHOTOS



PHOTO 10: Test 2 - Load at ballast shift



PHOTO 11: Test 2 - Max load



PHOTO 12: Test 2 - Max load



PHOTO 13: Ballast after completion of testing



PHOTO 14: Ballast and frame after completion of testing

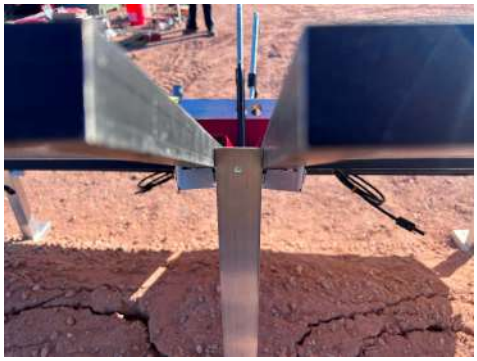

PHOTO 13: IR-F2 Clamp bracket after completion of testing

PNL
An ALS Company
Phoenix National Laboratories, LLC
941 S. Park Lane, Tempe, AZ 85281
P: 602.431.8887 • www.pnltest.com

INSPECTION AND TEST REPORT

PNL REF. # 26-240383 **S.O. #** 001 **INDEX** 03
INSPECTION DATE 03/20/2024
IR-30 Ground Frame w/ EarthBallast: Horizontal Racking Load

CLIENT	CLIENT PROJECT REFERENCE	CLIENT ORDER NO.
IntegraRack	IR-30 Solar Racking System w/ Earth Ballast - Horizontal Racking	per S.A.

SAMPLE DESCRIPTION	TEST LOCATION	TECHNICIANS
IR-30 Solar Racking System w/ Earth Ballast	St. George, UT	Weston A.

TEST CONDITIONS & EQUIPMENT INFORMATION

TEMPERATURE:	65 °F ± 10 °F	**HUMIDITY:**	30% ± 10%
LOAD TYPE:	Horizontal Racking Load	**TEST LOAD:**	Record
EQUIPMENT TYPE:	Dyna-Link 2 Dynamometer MSI-7300RF	**S/N & CALIBRATION DATE:**	S/N 100326; CAL 10/13/2023
SKID STEER MODEL:	Kubota SSV65		

TEST SPECIMEN & COMPONENT INFORMATION

TEST SPECIMEN:	IR-30 Solar Racking System	**ID NO.:**	IR-30RF1000
SOLAR PANELS SIZE:	39.25 in. x 66 in.	**TEST SPECIMEN AREA:**	17.989 ft^2
SYSTEM COMPONENT 1:	IRF2 Under Mount Flange Clamp Bracket	**PART NO. 1:**	IR-FCCM0500
SYSTEM COMPONENT 2:	Large IR-30 Frame Upright	**PART NO. 2:**	IRP-30LL1000-T
SYSTEM COMPONENT 3:	Small IR-30 Frame Upright	**PART NO. 3:**	IRP-30SL1000-T
SYSTEM COMPONENT 4:	IR-30 Base Tube	**PART NO. 4:**	IRP-30BT1000-T
SYSTEM COMPONENT 5:	Connecting Rod	**PART NO. 5:**	None - 1" EMT pipe

HORIZONTAL RACKING FORCE TEST PROCEDURE/DESCRIPTION

The IR-30 Solar Racking System Ground Frame was installed with the IR EarthBallast System and two solar panels. The EarthBallast system utilizes a mesh that is epoxied to the frame which is then loaded with loose dirt fill (ballast) that supports and holds down the frame. The horizontal load test was performed after the vertical uplift tensile load test. The system was tested with 3 loads of dirt from a Kubota SSV75 skid steer. The skid steer dirt loads were estimated at ~ 500 lbf each using an estimate of 100 lb/ft^3 for the density of soil. A lifting strap was wrapped around the panel lengthwise and run parallel to the frame in order to apply a horizontal force to the system (Photos). Force was applied using the skid steer and load was monitored with the digital dynamometer. The test was stopped at a load of 645 lbf. No movement or damage was visually noted during or after the test.

HORIZONTAL RACKING FORCE INSPECTION DETAILS

TEST NO.	BALLAST DETAILS		MAX. HORIZONTAL FORCE (lbf)	OBSERVATIONS
	SIZE (LxWxH) (in.)	WEIGHT (lbf)		
1	90 in. x 42 in. x 14 in. (14 CF)	~ 1400 lbf (3 skid steer buckets)	645	Test was stopped at 645 lbf. No damage or movement was visually noted.

TECHNICIAN 

REVIEWED BY 

ISO/IEC 17025:2017 accredited by PJLA - Accreditation No. 71936. Results relate only to the items or portions of items presented to PNL for testing and/or inspection. This report shall not be reproduced except in full without the approval of PNL to ensure that parts of the report are not taken out of context. PNL warrants that the above services and report were performed under the appropriate standard of care in accordance with our ISO/IEC 17025:2017 quality program, including the skill and judgement that is reasonably expected from similarly situated technical personnel. No other warranty, guaranty, or representation, either expressed or implied is included or intended.

PNL
An AIS Company
Phoenix National Laboratories, LLC
941 S. Park Lane, Tempe, AZ 85281
P: 602.431.8887 • www.pnltest.com

INSPECTION AND TEST REPORT

PNL REF. # 26-240383 **S.O. #** 001 **INDEX** 03
INSPECTION DATE 03/20/2024
IR-30 Ground Frame w/ EarthBallast: Horizontal Racking Load

CLIENT	CLIENT PROJECT REFERENCE	CLIENT ORDER NO.
IntegraRack	IR-30 Solar Racking System w/ Earth Ballast - Horizontal Racking	per S.A.
SAMPLE DESCRIPTION	**TEST LOCATION**	**TECHNICIANS**
IR-30 Solar Racking System w/ Earth Ballast	St. George, UT	Weston A.

PHOTOS



PHOTO 1: Horizontal force test setup



PHOTO 2: Horizontal force test setup



PHOTO 3: Horizontal force test setup



Photo 4: Horizontal force test at max load



Photo 4: Horizontal force test max load

PNL
An AIS Company
Phoenix National Laboratories, LLC
941 S. Park Lane, Tempe, AZ 85281
P: 602.431.8887 • www.pnltest.com

INSPECTION AND TEST REPORT

PNL REF. # 26-240383 **S.O. #** 001 **INDEX** 03
INSPECTION DATE 03/20/2024
IR-30 Ground Frame: Simulated Snow Load

CLIENT	CLIENT PROJECT REFERENCE	CLIENT ORDER NO.
IntegraRack	IR-30 Solar Racking System - Simulated Snow Load	pefr S.A.
SAMPLE DESCRIPTION	**TEST LOCATION**	**TECHNICIANS**
IR-30 Solar Racking System w/ 1 solar panel	St. George, UT	Weston A.

TEST CONDITIONS & EQUIPMENT INFORMATION

TEMPERATURE:	65 °F ± 10 °F	**HUMIDITY:**	30% ± 10%
LOAD TYPE:	Simulated Snow Load - Compressive	**TEST LOAD:**	Record
EQUIPMENT TYPE:	Dyna-Link 2 Dynamometer MSI-7300RF	**S/N & CALIBRATION DATE:**	S/N 100326; CAL 10/13/2023
WATER TANK WEIGHT:	2410 lbf		

TEST SPECIMEN & COMPONENT INFORMATION

TEST SPECIMEN:	IR-30 Solar Racking System	**ID NO.:**	IR-30RF1000
SOLAR PANELS SIZE:	39.25 in. x 66 in.	**TEST SPECIMEN AREA:**	17.989 ft^2
SYSTEM COMPONENT 1:	IRF2 Under Mount Flange Clamp Bracket	**PART NO. 1:**	IR-FCCM0500
SYSTEM COMPONENT 2:	Small IR-30 Frame Upright	**PART NO. 2:**	IRP-30SL1000-T
SYSTEM COMPONENT 3:	Small IR-30 Frame Upright	**PART NO. 3:**	IRP-30SL1000-T
SYSTEM COMPONENT 4:	IR-30 Base Tube	**PART NO. 4:**	IRP-30BT1000-T
SYSTEM COMPONENT 5:	Connecting Rod	**PART NO. 5:**	None - 1" EMT pipe

SIMULATED SNOW LOAD (COMPRESSIVE LOAD) TEST PROCEDURE/DESCRIPTION

The IR-30 Solar Racking System Ground Frame was installed using only the short uprights so that the solar panel, size 39-1/4 in.x 66 in., would be flat and parallel to the ground (Photo). Solar panel frames were connected to the ground frame via the IRF2 Under Mount Flange Clamp Bracket. The 1st part of the test was placing the large water tank directly on top of the solar panels and leaving it overnight. Two aluminum rectangular tubes were placed along the longitudinal edge of the solar panel for the water tank to be placed on so that the load was distributed to both sides of the frame (Photo). The 2nd part of the test involved adding 12 additional 5 gallon water jugs. The same 5 gallon jugs had been filled with water and weighed on PNL's calibrated universal test machines for previous tests (See PNL Report 26-231261.001 (dated 10/13/2023) for Compression Load Test) and had an average weight of 45.31 lbf so an average weight of 45 lbf was assumed for the full water jugs.

SIMULATED SNOW LOAD (COMPRESSIVE LOAD) INSPECTION DETAILS

	COMPRESSIVE FORCE		OBSERVATIONS
	DESCRIPTION	**WEIGHT (lbf)**	
1	Large water tank	2410	Solar panel held load overnight (> 10 h).
2	Large water tank + (12) five gallon jugs	2950	Solar panel held load, ~ 10 -15 minutes under observation. Slight deflections noted under load (See Photos). Minor permanent deformation noted after load removal (See Photos). The alignment tabs in the vertical uprights were no longer flat with the uprights.

TECHNICIAN Weston Allen

REVIEWED BY Kyle Flagg

ISO/IEC 17025:2017 accredited by PJLA - Accreditation No. 71936. Results relate only to the items or portions of items presented to PNL for testing and/or inspection. This report shall not be reproduced except in full without the approval of PNL to ensure that parts of the report are not taken out of context. PNL warrants that the above services and report were performed under the appropriate standard of care in accordance with our ISO/IEC 17025:2017 quality program, including the skill and judgement that is reasonably expected from similarly situated technical personnel. No other warranty, guaranty, or representation, either expressed or implied is included or intended.

PNL
An ALS Company
Phoenix National Laboratories, LLC
941 S. Park Lane, Tempe, AZ 85281
P: 602.431.8887 • www.pnltest.com

INSPECTION AND TEST REPORT

PNL REF. # 26-240383 **S.O. #** 001 **INDEX** 03
INSPECTION DATE 03/20/2024
IR-30 Ground Frame: Simulated Snow Load

CLIENT	CLIENT PROJECT REFERENCE	CLIENT ORDER NO.
IntegraRack	IR-30 Solar Racking System - Snow Load / Compression Load	per S.A.
SAMPLE DESCRIPTION		TECHNICIANS
Horizontal Load Test on IR-30 Ground Frame Earth Ballast		Weston A.

PHOTOS



PHOTO 1: Weighing the large water tank



PHOTO 2: Large water tank weight

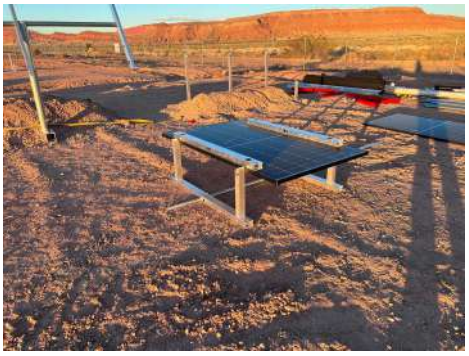

PHOTO 3: IR-30 Solar Racking System setup for test



PHOTO 4: Setting initial load



PHOTO 5: 2nd test - large tank + 12 five gallon jugs



PHOTO 6: Slight deflection under load



PHOTO 7: Slight deflections noted under load



PHOTO 8: Slight deflection noted under load



PHOTO 9: IR-30 system after compressive load tests

An AIS Company
Phoenix National Laboratories, LLC
941 S. Park Lane, Tempe, AZ 85281
P: 602.431.8887 • www.pnltest.com

INSPECTION AND TEST REPORT

PNL REF. # 26-240383 **S.O. #** 001 **INDEX** 03
INSPECTION DATE 03/20/2024
IR-30 Ground Frame: Simulated Snow Load

CLIENT	CLIENT PROJECT REFERENCE	CLIENT ORDER NO.
IntegraRack	IR-30 Solar Racking System - Snow Load / Compression Load	per S.A.
SAMPLE DESCRIPTION		TECHNICIANS
Horizontal Load Test on IR-30 Ground Frame Earth Ballast		Weston A.



PHOTO 10: Slight deformation after load removed



PHOTO 11: Slight deformation after load removed

PNL
An ALS Company
Phoenix National Laboratories, LLC
941 S. Park Lane, Tempe, AZ 85281
P: 602.431.8887 • www.pnltest.com

INSPECTION AND TEST REPORT

PNL REF. # 26-240383 **S.O. #** 001 **INDEX** 03
INSPECTION DATE 03/21/2024
IR-30 Ground Frame w/ AnchorSpikes: Simulated Wind Load

CLIENT	CLIENT PROJECT REFERENCE	CLIENT ORDER NO.
IntegraRack	IR-30 Solar Racking System w/ Anchor Spikes - Simulated Wind	per S.A.

SAMPLE DESCRIPTION	TEST LOCATION	TECHNICIANS
IR-30 Solar Racking System w/ AnchorSpikes	St. George, UT	Weston A.

TEST CONDITIONS & EQUIPMENT INFORMATION

TEMPERATURE:	65 °F ± 10 °F	**HUMIDITY:**	30% ± 10%
LOAD TYPE:	Wind Load - Tensile / Uplift	**TEST LOAD:**	Record
EQUIPMENT TYPE:	Dyna-Link 2 Dynamometer MSI-7300RF	**S/N & CALIBRATION DATE:**	S/N 100326; CAL 10/13/2023
SKID STEER MODEL:	Kubota SSV65		

TEST SPECIMEN & COMPONENT INFORMATION

TEST SPECIMEN:	IR-30 Solar Racking System	**ID NO.:**	IR-30RF1000
SOLAR PANELS SIZE:	39.25 in. x 66 in.	**TEST SPECIMEN AREA:**	17.989 ft^2
SYSTEM COMPONENT 1:	IRF2 Under Mount Flange Clamp Bracket	**PART NO. 1:**	IR-FCCM0500
SYSTEM COMPONENT 2:	Large IR-30 Frame Upright	**PART NO. 2:**	IRP-30LL1000-T
SYSTEM COMPONENT 3:	Small IR-30 Frame Upright	**PART NO. 3:**	IRP-30SL1000-T
SYSTEM COMPONENT 4:	IR-30 Base Tube	**PART NO. 4:**	IRP-30BT1000-T
SYSTEM COMPONENT 5:	Connecting Rod	**PART NO. 5:**	None - 1" EMT pipe
SYSTEM COMPONENT 6:	IR AnchorSpikes - 19.5	**PART NO. 6:**	19.5 in. Barbed aluminum spikes

SIMULATED WIND LOAD (TENSILE UPLIFT) FORCE TEST PROCEDURE/DESCRIPTION

The IR-30 Solar Racking System Ground Frame was installed using the small IR AnchorSpikes (Photo 3) and two part epoxy system. The AnchorSpike installation consists of pounding the anchors into the ground, filling with the two part epoxy system, and then clamping the anchors to the frame with the built in clamps. Load was applied via a red crossbar that was fastened to the edges of the solar panel frames that was connected to the ground frame via the IRF2 Under Mount Flange Clamp Bracket.

The solar panels were set at an approximate 30° angle. The tensile force was applied upwards and away, at a perpendicular angle from the solar panels using the skid steer (Photo 6). Displacement measurements were recorded before and after the load test at the anchor spike locations (Photos 4-5). Load was monitored with the digital dynamometer (Photos 1-2).

SIMULATED WIND LOAD (TENSILE UPLIFT) FORCE TEST ANCHORSPIKE AND FRAME DISPLACEMENT

	Spike #1		Spike #2		Spike #3		Spike #4		Spike #5		Spike #6	
	Stickout (in.)	**Ground to Frame (in.)**	**Stickout (in.)**	**Ground to Frame (in.)**	**Stickout (in.)**	**Ground to Frame (in.)**	**Stickout (in.)**	**Ground to Frame (in.)**	**Stickout (in.)**	**Ground to Frame (in.)**	**Stickout (in.)**	**Ground to Frame (in.)**
Initial	2.188	1.250	2.250	1.125	2.625	1.000	2.250	0.500	2.000	1.625	2.438	1.063
Final	2.250	1.250	2.250	1.125	2.563	1.125	2.563	0.750	1.938	1.625	2.250	1.375

SIMULATED WIND LOAD (TENSILE UPLIFT) FORCE INSPECTION DETAILS

TEST NO.	MAX. FORCE (lbf)	OBSERVATIONS
1	2385	At 1500 lbf the frame visibly shifted and started to roll forward. At 2385 lbf one of the solar panels failed and shattered (Photos 7-9). The frame and brackets holding the solar panel kept it in place and were permanently deformed. The aluminum tube upright had bent forward and outward causing the seam of the tube to tear and it allowed the through bolt to come free. Two mounting brackets permanently deformed and there was additional permanent deformation in the base frame (Photos 10-15)

TECHNICIAN 

REVIEWED BY 

ISO/IEC 17025:2017 accredited by PJLA - Accreditation No. 71936. Results relate only to the items or portions of items presented to PNL for testing and/or inspection. This report shall not be reproduced except in full without the approval of PNL to ensure that parts of the report are not taken out of context. PNL warrants that the above services and report were performed under the appropriate standard of care in accordance with our ISO/IEC 17025:2017 quality program, including the skill and judgement that is reasonably expected from similarly situated technical personnel. No other warranty, guaranty, or representation, either expressed or implied is included or intended.

PNL
An AIS Company
Phoenix National Laboratories, LLC
941 S. Park Lane, Tempe, AZ 85281
P: 602.431.8887 • www.pnltest.com

INSPECTION AND TEST REPORT

PNL REF. # 26-240383 **S.O. #** 001 **INDEX** 03
INSPECTION DATE 03/21/2024
IR-30 Ground Frame w/ AnchorSpikes: Simulated Wind Load

CLIENT	CLIENT PROJECT REFERENCE	CLIENT ORDER NO.
IntegraRack	IR-30 Solar Racking System w/ Anchor Spikes - Simulated Wind	per S.A.
SAMPLE DESCRIPTION	**TEST LOCATION**	**TECHNICIANS**
IR-30 Solar Racking System w/ AnchorSpikes	St. George, UT	Weston A.

PHOTOS



PHOTO 1: Dynamometer used to record loads

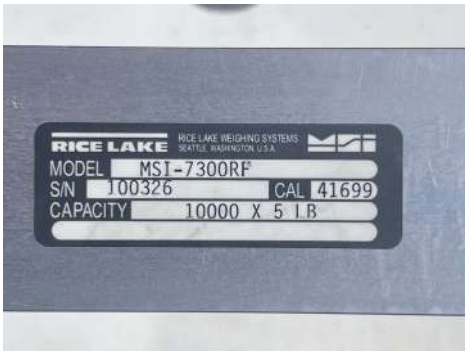

PHOTO 2: Dynamometer ID label



PHOTO 3: AnchorSpikes. The small AnchorSpike was used for setup in this test

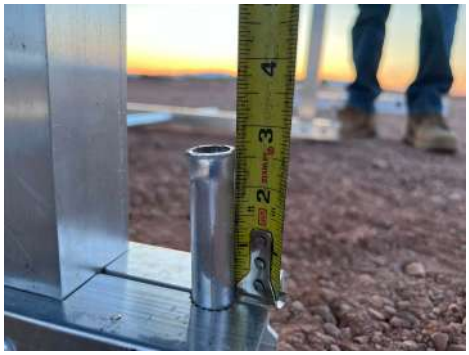

PHOTO 4: 'Stickout' measurement example at Spike #3



PHOTO 5: Ground to frame measurement example at Spike #3



PHOTO 6: Test setup - IR-30 Solar Racking System with AnchorSpikes



PHOTO 7: IR-30 Solar Racking System at max load



PHOTO 8: Closeup of max load, 2385 lbf



PHOTO 9: IR-30 Solar Racking System right after max load when panel failed

PNL
An AIS Company
Phoenix National Laboratories, LLC
941 S. Park Lane, Tempe, AZ 85281
P: 602.431.8887 • www.pnltest.com

INSPECTION AND TEST REPORT

PNL REF. # 26-240383 **S.O. #** 001 **INDEX** 03
INSPECTION DATE 03/21/2024
IR-30 Ground Frame w/ AnchorSpikes: Simulated Wind Load

CLIENT	CLIENT PROJECT REFERENCE	CLIENT ORDER NO.
IntegraRack	IR-30 Solar Racking System w/ Anchor Spikes - Simulated Wind	per S.A.
SAMPLE DESCRIPTION	**TEST LOCATION**	**TECHNICIANS**
IR-30 Solar Racking System w/ AnchorSpikes	St. George, UT	Weston A.

PHOTOS



PHOTO 10: Solar panels after testing



PHOTO 11: Frame after testing



PHOTO 12: Middle brackets after testing



PHOTO 13: Bracket deformation after testing



PHOTO 14: Upright mount deformation after testing



PHOTO 15: Upright deformation after testing