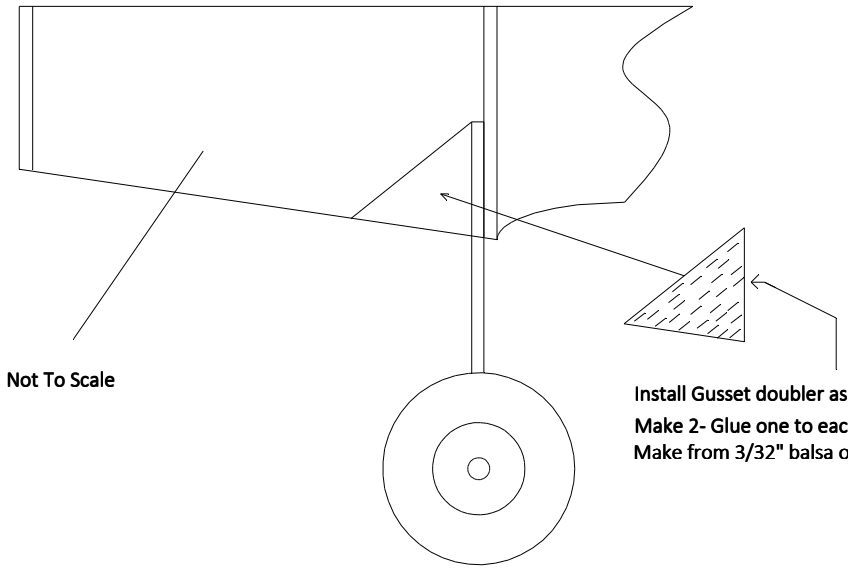

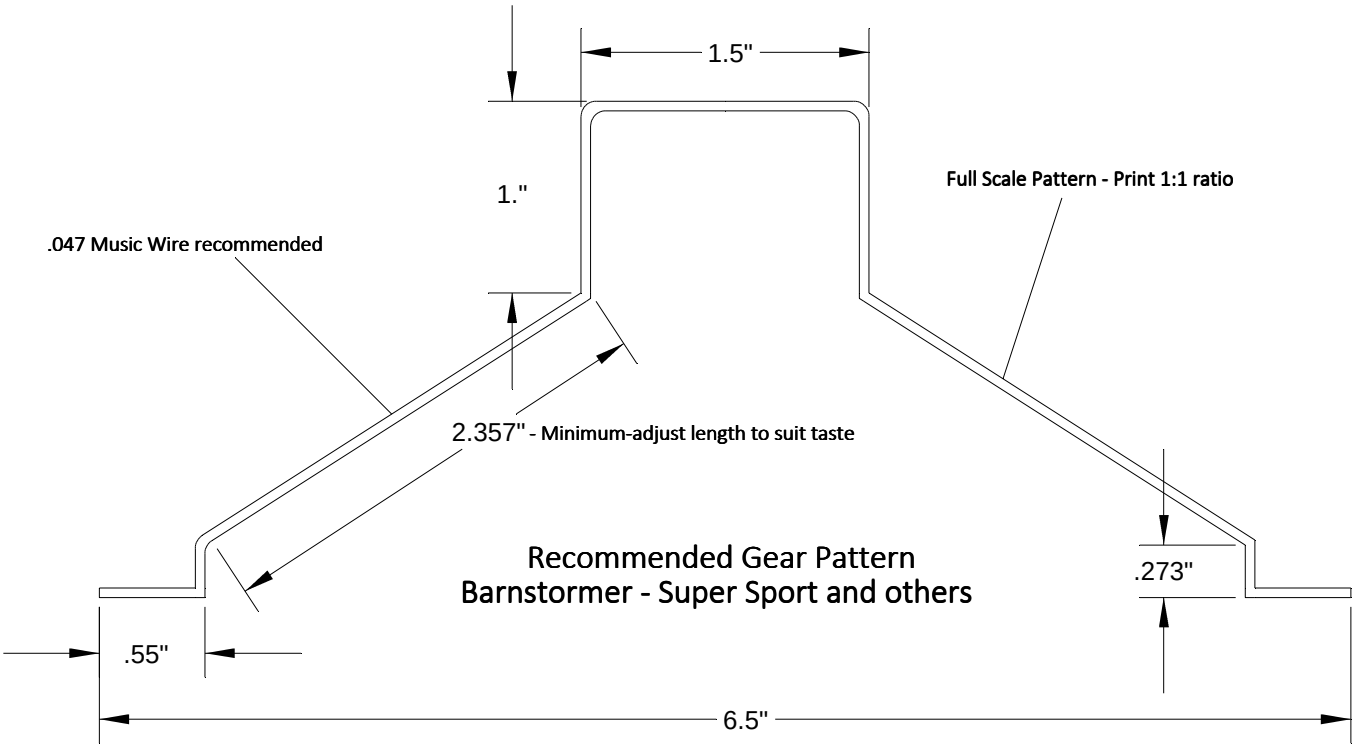

D. Hart

Copyright 2019 - WillyNillies.com