# JTL 108.6

Luffing crane
Tower TH 12.2

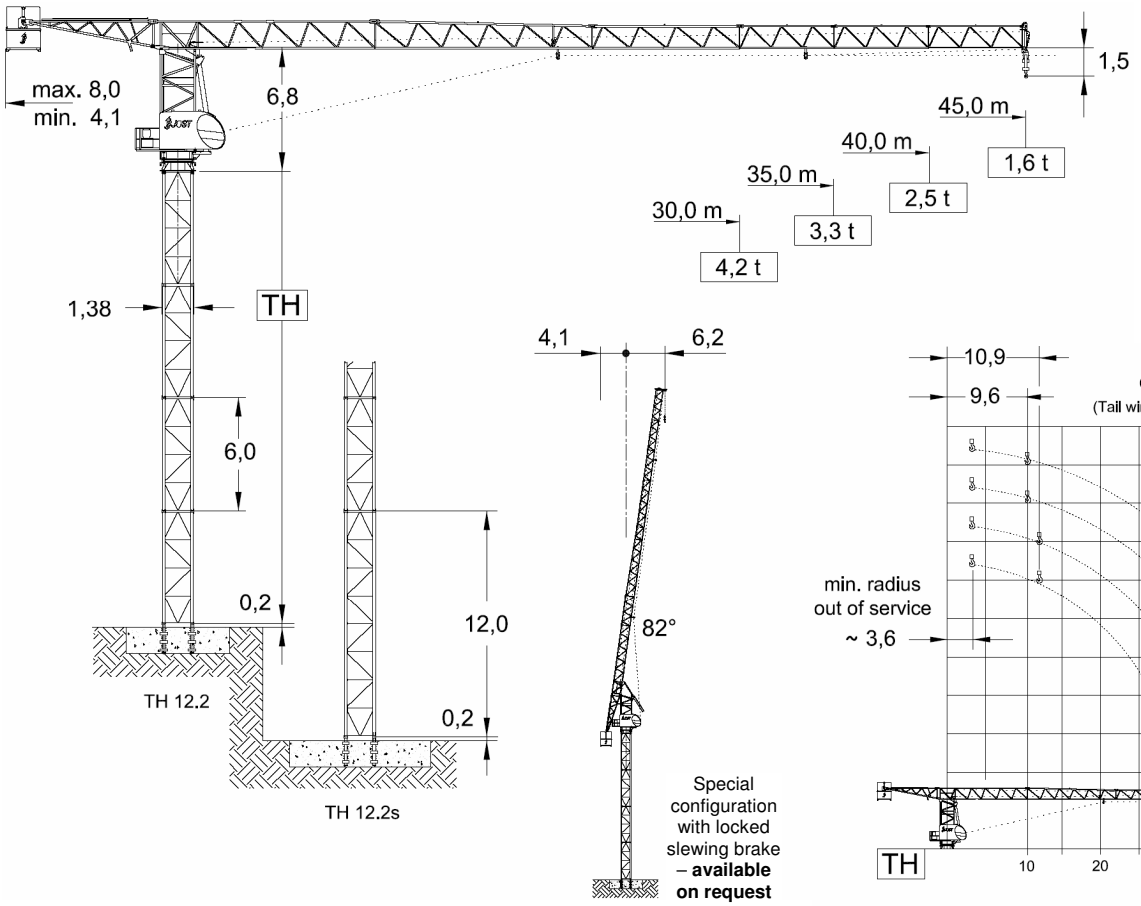


| Jib length (m) | | 30,0 - 35,0 | 40,0 - 45,0 |
|---|---|---|---|
| TH | TH 12.2 | 36,0 m | 30,0 m |
| | TH 12.2s | 42,0 m | 36,0 m |

## Radius & Capacity

| Jib | | max Load | | | | | | | | | |
|---|---|---|---|---|---|---|---|---|---|---|---|
| m | rope | t | m | 18 | 20 | 22 | 25 | 30 | 35 | 40 | 45 |
| 45 | | **3,0** | **25,6** | 3,00 | 3,00 | 3,00 | 3,00 | 2,52 | 2,13 | 1,83 | **1,60** |
| | | **6,0** | **13,3** | 4,36 | 3,90 | 3,53 | 3,07 | 2,52 | 2,13 | 1,83 | **1,60** |
| 40 | | **3,0** | **33,9** | 3,00 | 3,00 | 3,00 | 3,00 | 3,00 | 3,00 | **2,50** | |
| | | **6,0** | **17,6** | 6,00 | 5,22 | 4,76 | 4,15 | 3,42 | 2,89 | **2,50** | |
| 35 | | **3,0** | **35,0** | 3,00 | 3,00 | 3,00 | 3,00 | 3,00 | **3,00** | | |
| | | **6,0** | **19,9** | 6,00 | 5,94 | 5,45 | 4,70 | 3,91 | **3,30** | | |
| 30 | | **3,0** | **30,0** | 3,00 | 3,00 | 3,00 | 3,00 | **3,00** | | | |
| | | **6,0** | **21,4** | 6,00 | 6,00 | 5,82 | 4,08 | **4,20** | | | |

## Speeds 400 V - 50 Hz / 440 V - 60 Hz

| Hoist unit 22 kW Frequency inverter | | | | | | | | |
|---|---|---|---|---|---|---|---|---|
| Pmax | | | 3,0 t - 6,0 t | | | | | |
| | Load | [to] | 1,2 | 1,3 | 1,5 | 1,8 | 2,5 | 3,0 |
| | v | [m/min] | 80 | 78 | 68 | 60 | 46 | 40 |
| | Load | [to] | 2,4 | 2,6 | 3,0 | 3,6 | 5,0 | 6,0 |
| | v | [m/min] | 40 | 39 | 34 | 30 | 23 | 20 |
| Drum capacity | | | 340,0 m | | | | | |

| Hoist unit 30 kW Frequency inverter | | | | | | | | |
|---|---|---|---|---|---|---|---|---|
| Pmax | | | 3,0 t - 6,0 t | | | | | |
| | Load | [to] | 1,2 | 1,3 | 1,5 | 1,8 | 2,5 | 3,0 |
| | v | [m/min] | 116 | 110 | 98 | 86 | 66 | 58 |
| | Load | [to] | 2,4 | 2,6 | 3,0 | 3,6 | 5,0 | 6,0 |
| | v | [m/min] | 58 | 55 | 49 | 43 | 33 | 29 |
| Drum capacity | | | 340,0 m | | | | | |

| | | | |
|---|---|---|---|
| Motor | 11,0 kW FI | 1 x 3,0 kW | 2 x 5,0 kW |
| t / v | 2,5 min | 0,77 rpm | 25,0 m / min |
| Power requirement | | Hoist 22 kW | 44 kVA |
| Upper part | | Hoist 30 kW | 53 kVA |

FEM A3
DIN 15018 H1-B3
TÜV CERT
DIN EN ISO 9001

Edition 10/05. Subject to modification.
Specifications and data not binding.


**JOST Cranes GmbH**
Garchinger Str. 26
80805 München
GERMANY

**FON** +49 (89) 36109-333
**FAX** +49 (89) 36109-334
**MAIL** info@jostcranes.de
**WEB** www. jostcranes.de

**MTI – LUX S.A.**
2a, rue Prince Henri
L-6735 Grevenmacher
Luxemburg

**FON** +352 26745480
**FAX** +352 26745483
**MAIL** mtilux@aol.com
**WEB** www.mti-lux.com