Zehnder's Splash Village
Hotel & Waterpark

BOILER ROOM ADDITION AND RENOVATIONS FOR:

ZEHNDER'S SPLASH VILLAGE HOTEL AND WATER PARK

FRANKENMUTH, MICHIGAN

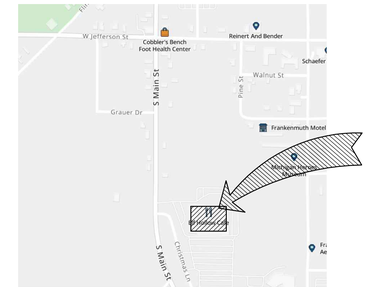

LOCATION MAP
NO SCALE

ARCHITECTURAL:

TSSF ARCHITECTS, INC.
ARCHITECTS PLANNERS
122 N. WASHINGTON AVENUE SAGINAW , MICHIGAN
PHONE #: (989) 752-7311

MECHANICAL/ELECTRICAL/STRUCTURAL:

MACMILLAN ASSOCIATES
CONSULTING ENGINEERS
714 EAST MIDLAND STREET • BAY CITY, MICHIGAN 48706
(989) 894-4300 WWW.MACMILLANASSOCIATES.COM *SINCE 1963*

GENERAL NOTES

1. FIELD VERIFY ALL DIMENSIONS PRIOR TO BEGINNING WORK.
2. PLAN DIMENSIONS ARE TO FACE OF BASIC WALL MATERIAL (GYPSUM BOARD, PLASTER, OR CMU) AND DO NOT INCLUDE THICKNESS OF FINISH MATERIAL (CERAMIC TILE, PANELING, ETC.). AT AREAS WHERE GYP. BD. IS ADHERED TO CMU, THE DIMENSION IS TO THE CMU.
3. ENCAPSULATE ARCHITECTURAL, MECHANICAL, OR ELECTRICAL "BOXES" RECESSED IN FIRE RATED WALLS (I.E., ELECTRICAL AND COMMUNICATION PANELS, ALARM PANELS, FIRE EXTINGUISHER CABINETS, GAS VALVE SHUT-OFF BOXES, ETC.)
4. EXTEND ALL PARTITIONS TIGHT TO DECK UNLESS NOTED OTHERWISE.
5. CONTRACTOR SHALL SEAL ALL PENETRATIONS THROUGH FLOORS, CORRIDOR WALLS WITH U.L. FIRE RATED MATERIAL. SCHEDULE INSPECTION OF CONCEALED AREA PRIOR TO INSTALLATION OF CEILING SYSTEM.
   1.) AT 50% COMPLETION
   2.) AT PROJECT FINISH, INSPECTION WITH BUILDING INSPECTOR
6. PROVIDE POLYURETHANE SEALANT AT ALL JUNCTURES OF DISSIMILAR MATERIALS (DOOR FRAMES, COUNTERTOPS, ETC.)
7. ALL CUTTING AND PATCHING IS THE RESPONSIBILITY OF THE TRADE REQUIRING THE WORK.
8. PROVIDE BLOCKING FOR ALL WALL HUNG EQUIPMENT AS REQUIRED. BLOCKING SHALL BE NON-COMBUSTIBLE
9. NO SMOKING OR VAPING IS ALLOWED ANYWHERE INSIDE OF THE BUILDING OR ON THE GROUNDS
10. THE ARCHITECT DOES NOT HAVE CONTROL OR CHARGE OF CONSTRUCTION MEANS, METHODS, TECHNIQUES, SEQUENCES, OR PROCEDURES; IS NOT RESPONSIBLE FOR SAFETY PRECAUTIONS AND PROGRAMS IN CONNECTION WITH THE WORK; AND WILL NOT BE RESPONSIBLE FOR THE CONTRACTOR'S FAILURE TO CARRY OUT THE WORK IN ACCORDANCE WITH THOSE DOCUMENTS PREPARED BY THE ARCHITECT.
11. ALL CONTRACTORS SHALL VISIT THE SITE AND AQUAINT THEMSELVES WITH THE CONDITIONS UNDER WHICH THE CONTRACT WILL BE PERFORMED.
12. PROVIDE 2x FIRE BLOCKING AT CONCEALED SPACES OF STUDS AND FURRING SPACES HORIZONTALLY AT INTERVALS NOT EXCEEDING 10 FEET AND VERTICALLY AT CEILING / FLOOR LEVELS.
13. FIRE BLOCKING SHALL BE INSTALLED 20 FEET O.C. IN CONCEALED EXTERIOR ELEMENTS SO NO AREA IS GREATER THAN 100 S.F.
14. PORTABLE FIRE EXTINGUISHERS (F.E.) SHALL BE PROVIDED IN BUILDINGS DURING CONSTRUCTION.
15. CONTRACTOR AND ALL SUBS SHOULD BID FROM FULL SET. IT IS THE RESPONSIBILITY OF EACH TRADE TO VERIFY THEY HAVE NOT MISSED ANYTHING.
16. UNDER NO CIRCUMSTANCE ARE DRAWINGS TO BE SCALED.
17. CONSTRUCTION START TIMES MAY VARY DEPENDING ON THE DAY. VERIFY SCHEDULE WITH OWNER.

DRAWING INDEX:

COVER Title Sheet, Drawing Index, Abbreviations, General Notes

ARCHITECTURAL

A0.1 CODE REVIEW/MASTER FLOOR PLANS
D2.1 PARTIAL FIRST FLOOR DEMOLITION PLAN
D2.2 PARTIAL SECOND FLOOR DEMOLITION PLAN
A2.0 PARTIAL BASEMENT PLAN
A2.1 PARTIAL FIRST FLOOR PLAN
A2.2 PARTIAL SECOND FLOOR PLAN
A3.0 DOOR AND HARDWARE SCHEDULES
A4.0 PARTIAL ROOF PLAN
A5.0 PARTIAL EXTERIOR ELEVATIONS
A7.0 WALL SECTIONS
A9.1 PARTIAL FIRST FLOOR REFLECTED CEILING PLAN
A9.2 PARTIAL SECOND FLOOR RELECTED CEILING PLAN

STRUCTURAL

S1.1 STRUCTURAL FRAMING PLANS
S2.1 STRUCTURAL NOTES AND SCHEDULES
S3.1 STRUCTURAL DETAILS

MECHANICAL

M1.1 BASEMENT FLOOR PLAN – MECHANICAL DEMOLITION
M1.2 FIRST FLOOR PLAN – MECHANICAL DEMOLITION
M1.3 FOURTH FLOOR PLAN – MECHANICAL DEMOLITION
M1.4 ENLARGED WATER HEATER ROOM PLAN – MECHANICAL DEMOLITION
M2.1 BASEMENT FLOOR PLAN – MECHANICAL REVISIONS
M2.2 FIRST FLOOR PLAN – MECHANICAL REVISIONS
M2.3 FOURTH FLOOR PLAN – MECHANICAL REVISIONS
M2.4 ENLARGED WATER HEATER PLAN – MECHANICAL REVISIONS
M2.5 ENLARGED SECOND FLOOR STORAGE ROOM PLAN – MECHANICAL REVSIONS
M3.1 MECHANICAL SCHEDULES AND DETAILS
M3.2 MECHANICAL SPECIFICATIONS
FP1.1 FIRE PROTECTION REVISIONS

ELECTRICAL

E1.1 BASEMENT FLOOR PLAN – ELECTRICAL DEMOLITION
E1.2 FIRST FLOOR PLAN – ELECTRICAL DEMOLITION
E2.1 BASEMENT FLOOR PLAN – ELECTRICAL REVISIONS
E2.2 FIRST FLOOR OVERALL PLAN – ELECTRICAL REVISIONS
E2.3 FIRST FLOOR PLAN – ELECTRICAL REVISIONS
E2.4 SECOND FLOOR PLAN ELECTRICAL
E3.1 ELECTRICAL RISER DIAGRAM
E3.2 ELECTRICAL INFORMATION AND SCHEDULES
E3.3 ELECTRICAL SPECIFICATIONS

ISSUED FOR CONSTRUCTION
DATE: 12-05-2025
PROJECT NO. 2529

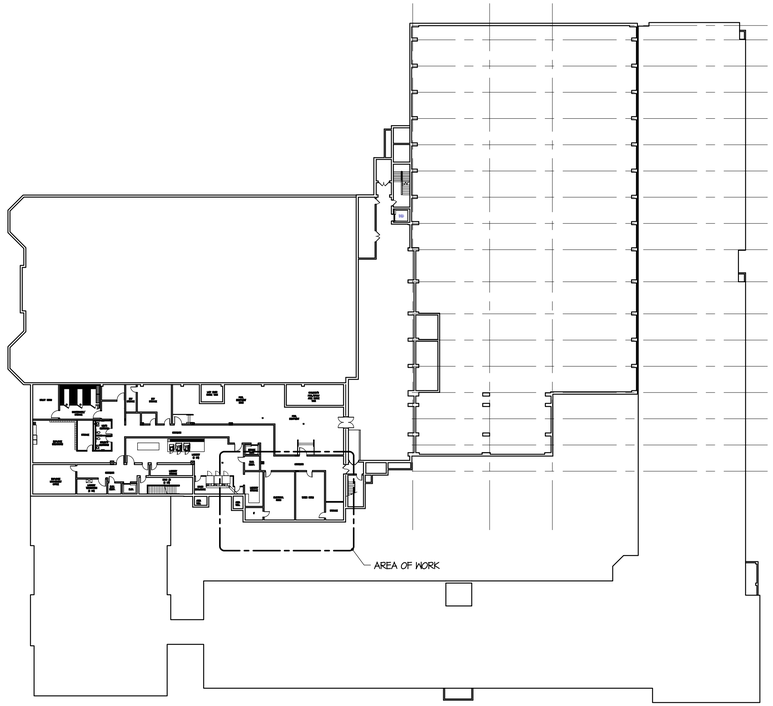

BASEMENT MASTER PLAN
SCALE: 1" =40'-0"

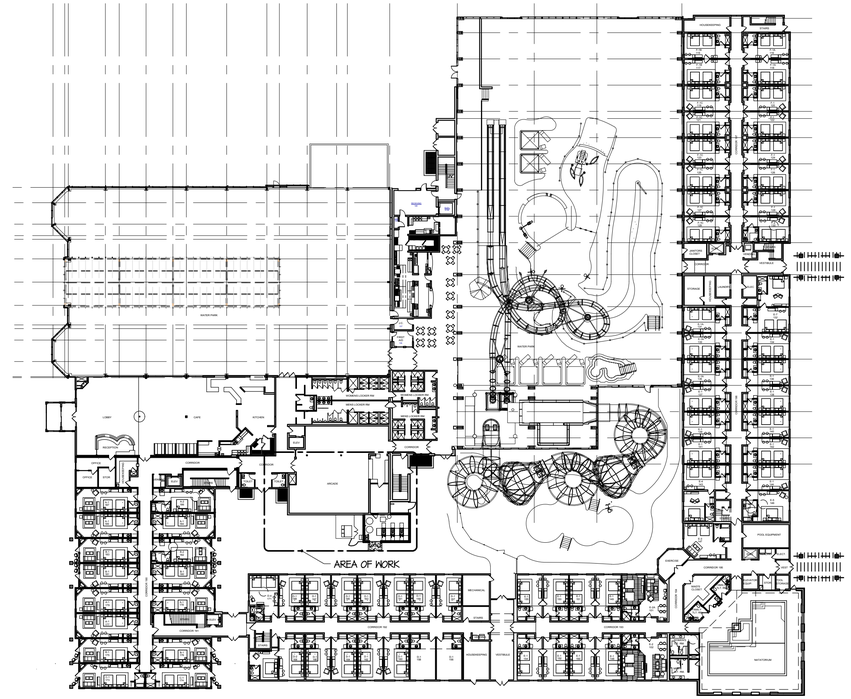

FIRST FLOOR MASTER PLAN
SCALE: 1" =40'-0"

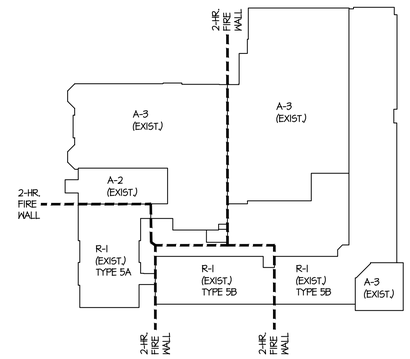

CONSTRUCTION TYPE AND OCCUPANCY PLAN
NOT TO SCALE

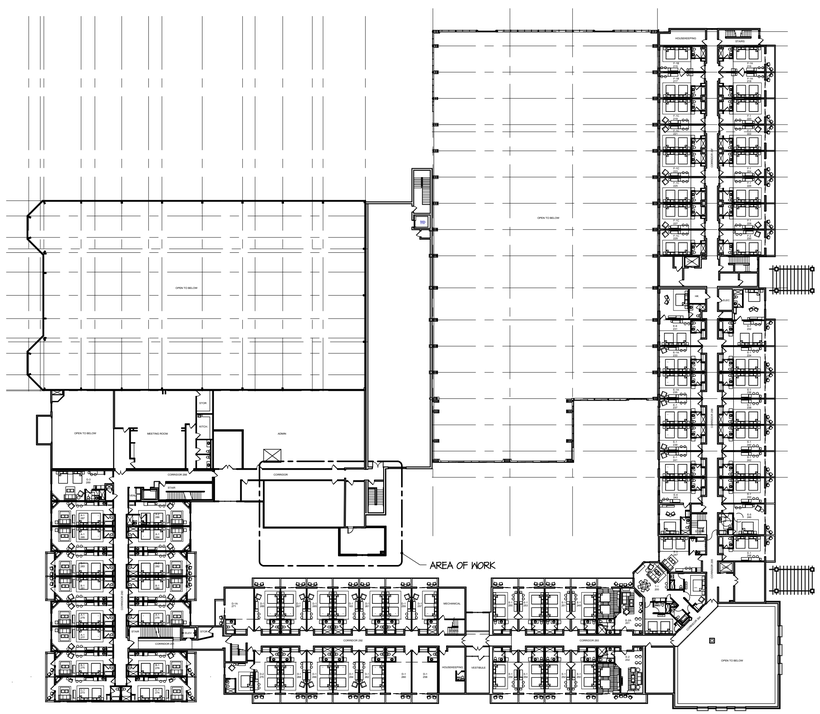

SECOND FLOOR MASTER PLAN
SCALE: 1" =40'-0"

BUILDING INFORMATION			
AREA DESIGNATION	#1	#2	#3
OCCUPANCY:	R-1	A-2	A-3
	HOTEL	ASSEMBLY	ASSEMBLY
CONSTRUCTION TYPE:	5A	5A	5A
	PROTECTED	PROTECTED	PROTECTED
SPRINKLERED/ NFPA 13:	YES	YES	YES
NUMBER OF STORIES:	4	2	1
NUMBER OF FLOORS:	6	3	1
FLOOR AREAS: BASEMENT:	1590	10,381	----
FIRST:	10,370	10,296	19,680
SECOND:	10,370	10,376	----
THIRD:	10,104	----	----
FOURTH:	10,104	----	----
MEZZANINE:	2493	----	----
CANOPY:	----	884	----
TOTAL FLOOR AREAS:	45,033	31,937	19,680
BUILDING FOOTPRINT:	10,918	10,996	19,680
TOTAL BUILDING AREA:	96,650		
TOTAL BUILDING FOOTPRINT:	41,594		
ADDITION: FIRST FLOOR	240	----	----
ADDITION: SECOND FLOOR	240	----	----
ADDITION TOTAL:	480		

APPLICABLE CODES 2021 MICHIGAN BUILDING CODE 2023 MICHIGAN ELECTRICAL CODE 2021 MICHIGAN MECHANICAL CODE 2021 MICHIGAN PLUMBING CODE	2021 MICHIGAN BUILDING CODE
OCCUPANT LOAD (PER TABLE 1004.2)	2
MAXIMUM LENGTH OF EXIT TRAVEL (PER TABLE 1017.2)	250'-0" MAX.
MAXIMUM LENGTH OF DEAD END CORRIDOR (PER SECT. 1020.4)	50'-0"
MINIMUM WIDTH OF EGRESS COMPONENTS:	
EXIT ACCESS CORRIDORS (PER SECT. 1020.2)	MIN 44"
COMMON PATH OF TRAVEL WITH ONE EXIT ACCESS	.OL > 30 = 75
DOORS (PER SECT. 1010.1.1)	32" MIN. CLR.
FIRE RESISTANCE RATINGS OF EGRESS COMPONENTS:	
EXIT ACCESS CORRIDORS (PER TABLE 1020.1)	1 HR
STAIR SHAFTS	NOT APPLICABLE
HORIZONTAL EXITS (PER 1024.3)	1 HR
AREAS OF REFUGE	NOT APPLICABLE
FIRE RESISTANCE RATINGS OF FIRE SEPARATIONS:	
SHAFTS-OTHER THAN STAIRS	NOT APPLICABLE
STORAGE ROOMS GREATER THAN 100 SQ. FT. (PER TABLE 509)	1 HR.
FIRE RESISTANCE RATINGS OF FIRE SEPARATIONS:	
STRUCTURAL ELEMENT (PER TABLE 601)	
PRIMARY STRUCTURAL FRAME	1 HR.
NON-BEARING WALLS - EXTERIOR	0 HR.
NON-BEARING WALLS - INTERIOR	0 HR.
ROOF CONSTRUCTION	1 HR.
BEARING WALLS - EXTERIOR	1 HR.
BEARING WALLS - INTERIOR	1 HR.

TSSF ARCHITECTS, INC.
ARCHITECTS INTERIORS PLANNERS
122 N. WASHINGTON AVENUE SAGINAW, MICHIGAN

BOILER ROOM ADDITION AND RENOVATIONS FOR:
ZEHNDER'S SPLASH VILLAGE
FRANKENMUTH, MICHIGAN

NO.	DATE

DRAWN BY G.E.C.
DATE 12/05/25
APPROVED

SHEET NO.
A0.1

PROJECT NO.
2529

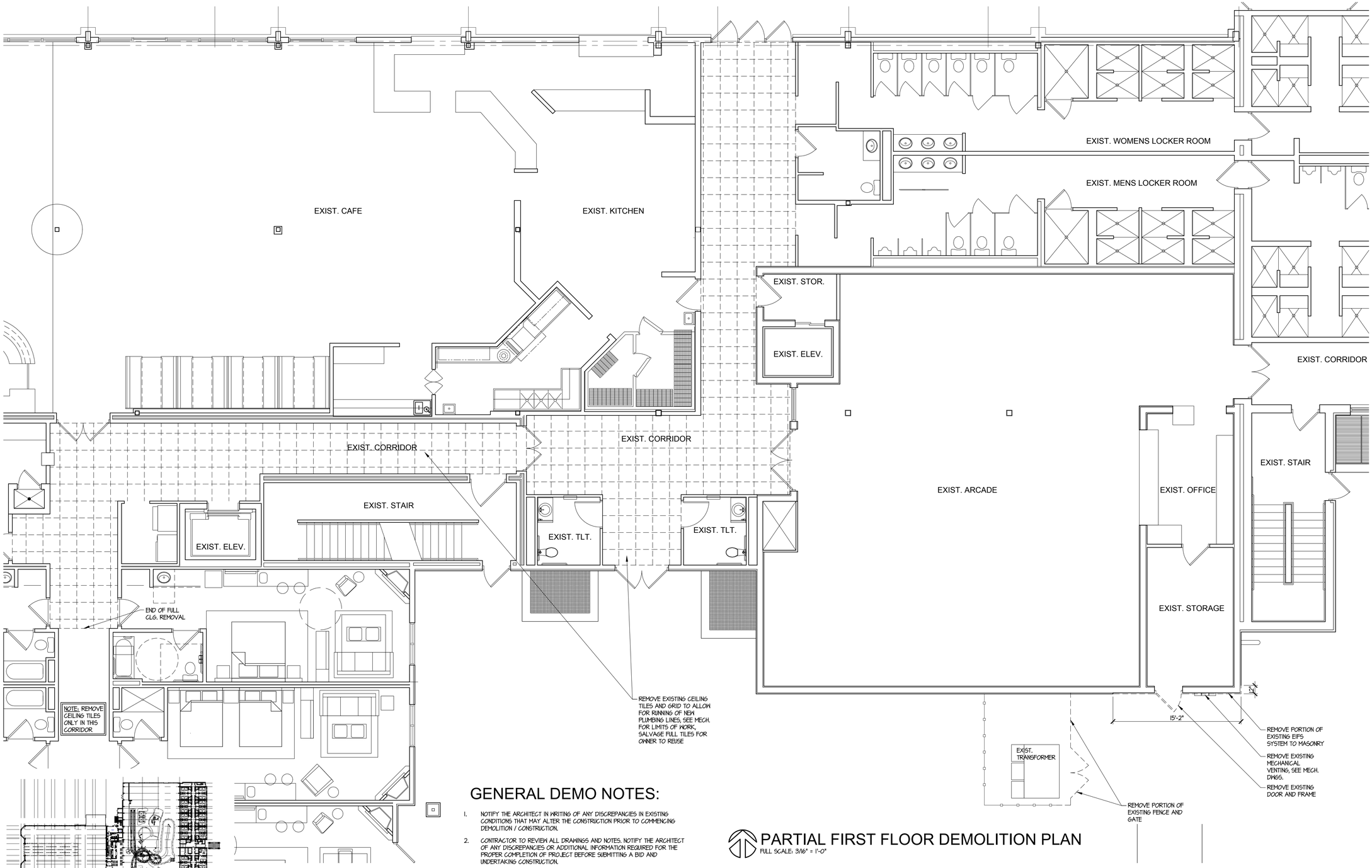

PARTIAL FIRST FLOOR DEMOLITION PLAN

FULL SCALE: 3/16" = 1'-0"

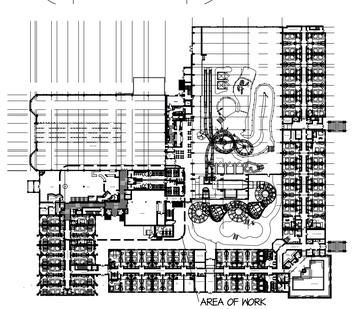

FIRST FLOOR PLAN

NOT TO SCALE

GENERAL DEMO NOTES:

1. NOTIFY THE ARCHITECT IN WRITING OF ANY DISCREPANCIES IN EXISTING CONDITIONS THAT MAY ALTER THE CONSTRUCTION PRIOR TO COMMENCING DEMOLITION / CONSTRUCTION.
2. CONTRACTOR TO REVIEW ALL DRAWINGS AND NOTES. NOTIFY THE ARCHITECT OF ANY DISCREPANCIES OR ADDITIONAL INFORMATION REQUIRED FOR THE PROPER COMPLETION OF PROJECT BEFORE SUBMITTING A BID AND UNDERTAKING CONSTRUCTION.
3. CONTRACTOR SHALL PROVIDE AND INSTALL ALL FLASHING, CAULKING AND OTHER MATERIALS AS REQUIRED TO ENSURE A WATERTIGHT, LEAK-PROOF PERIMETER DURING AND AFTER THE DEMOLITION PHASE.
4. EXISTING STRUCTURE (COLUMNS, BEAMS, GIRTS, ETC., DOOR HEADERS, JAMBS, ETC.) TO BE PROTECTED DURING THE DEMOLITION PROCESS (U.N.O.)
5. REMOVE AND DISPOSE OF TEMPORARY PROTECTION AS REQUIRED FOR NEW CONSTRUCTION.
6. ALL MATERIALS ARE EXISTING UNLESS NOTED OTHERWISE.
7. MECHANICAL, ELECTRICAL ITEMS TO BE DEMOLISHED SHALL BE BY THE RESPECTIVE TRADE CONTRACTOR.
8. FOR ADDITIONAL ITEMS TO BE DEMOLISHED SEE COMPLETE MECHANICAL AND ELECTRICAL DRAWINGS.

TSSF ARCHITECTS, INC.
ARCHITECTS INTERIORS PLANNERS
122 N. WASHINGTON AVENUE SAGINAW, MICHIGAN

BOILER ROOM ADDITION AND RENOVATIONS FOR:

ZEHNDER'S SPLASH VILLAGE

FRANKENMUTH, MICHIGAN

NO.	DATE

DRAWN BY C.M.B.
DATE 12/05/25
APPROVED

SHEET NO.

D2.1

PROJECT NO.
2529

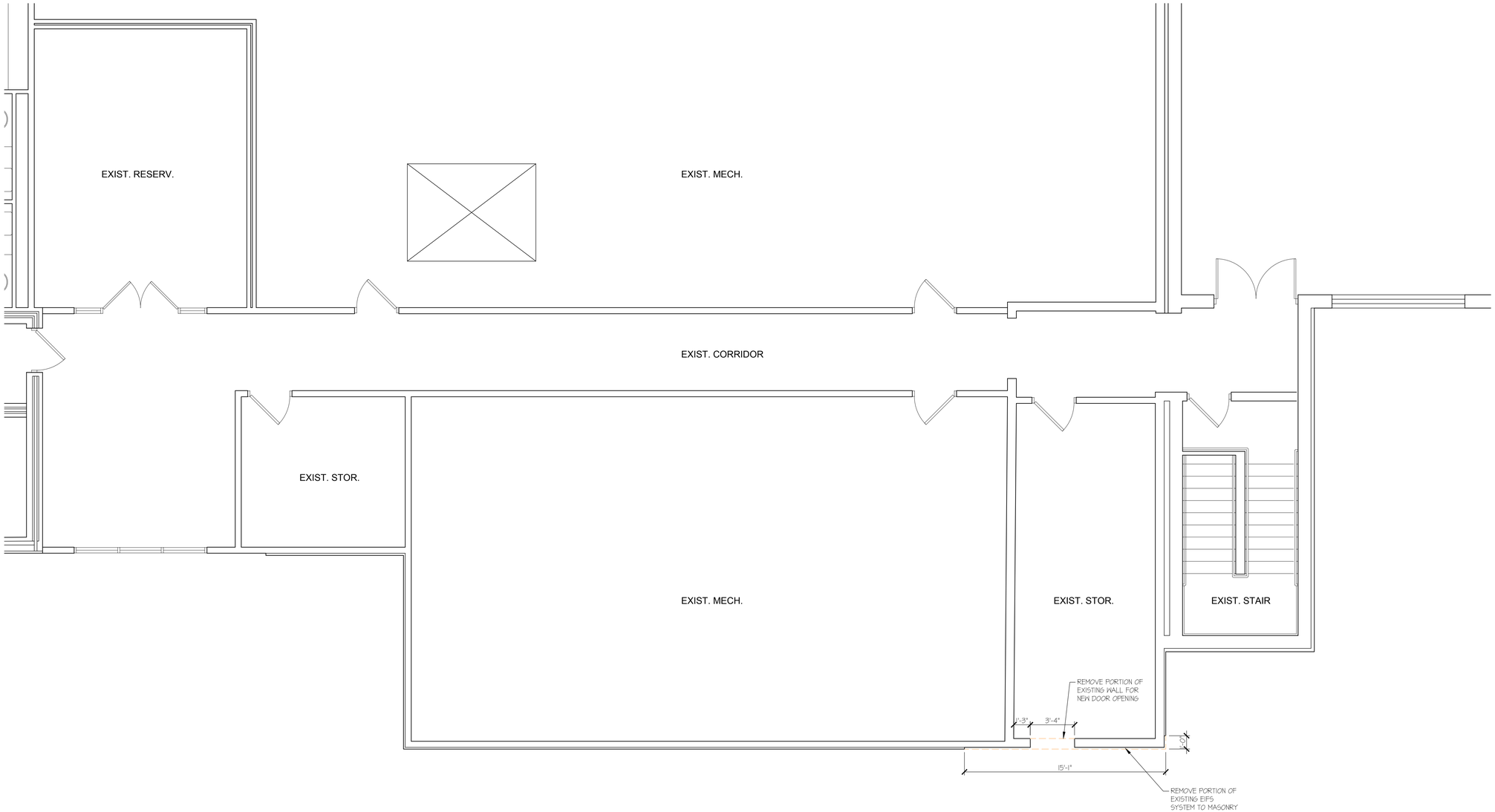

PARTIAL SECOND FLOOR DEMOLITION PLAN

FULL SCALE: 1/4" = 1'-0"

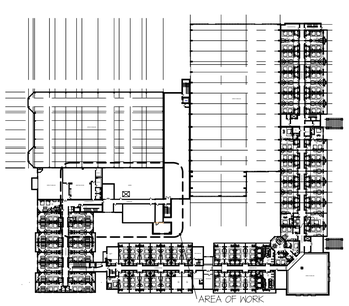

SECOND FLOOR PLAN

NOT TO SCALE

TSSF ARCHITECTS, INC.
ARCHITECTS INTERIORS PLANNERS
122 N. WASHINGTON AVENUE SAGINAW, MICHIGAN

BOILER ROOM ADDITION AND RENOVATIONS FOR:

ZEHNDER'S SPLASH VILLAGE

FRANKENMUTH, MICHIGAN

NO.	DATE

DRAWN BY **C.M.B.**

DATE **12/05/25**

APPROVED

SHEET NO.

D2.2

PROJECT NO.

2529

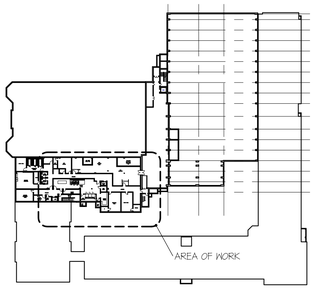

BASEMENT PLAN
NOT TO SCALE

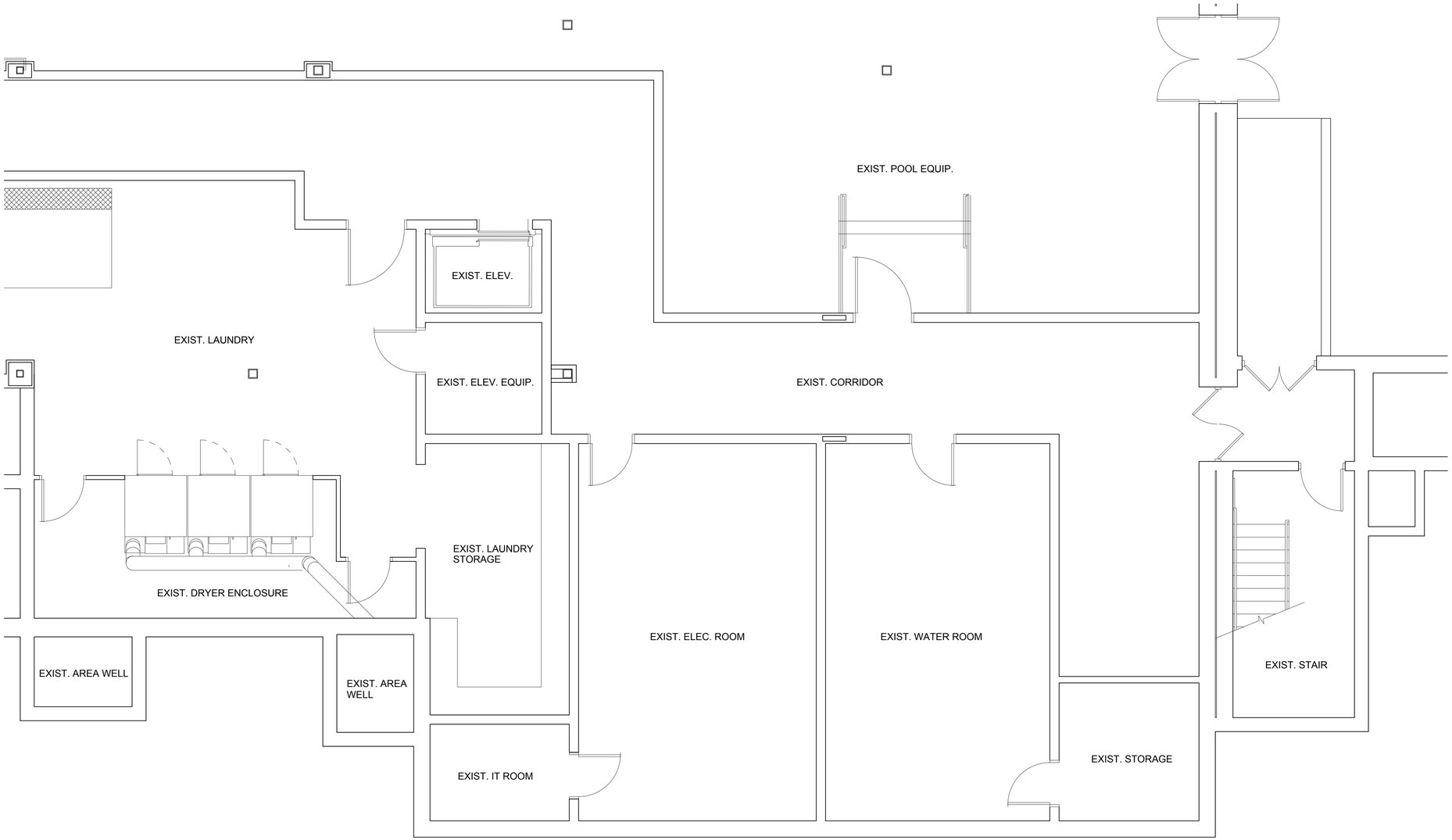

PARTIAL BASEMENT PLAN
SCALE: 1/4" = 1'-0"

TSSF ARCHITECTS, INC.
ARCHITECTS INTERIORS PLANNERS
122 N. WASHINGTON AVENUE SAGINAW, MICHIGAN

BOILER ROOM ADDITION AND RENOVATIONS FOR:
ZEHNDER'S SPLASH VILLAGE
FRANKENMUTH, MICHIGAN

NO.	DATE

DRAWN BY G.E.C.
DATE 12/05/25
APPROVED

SHEET NO.
A2.0

PROJECT NO.
2529

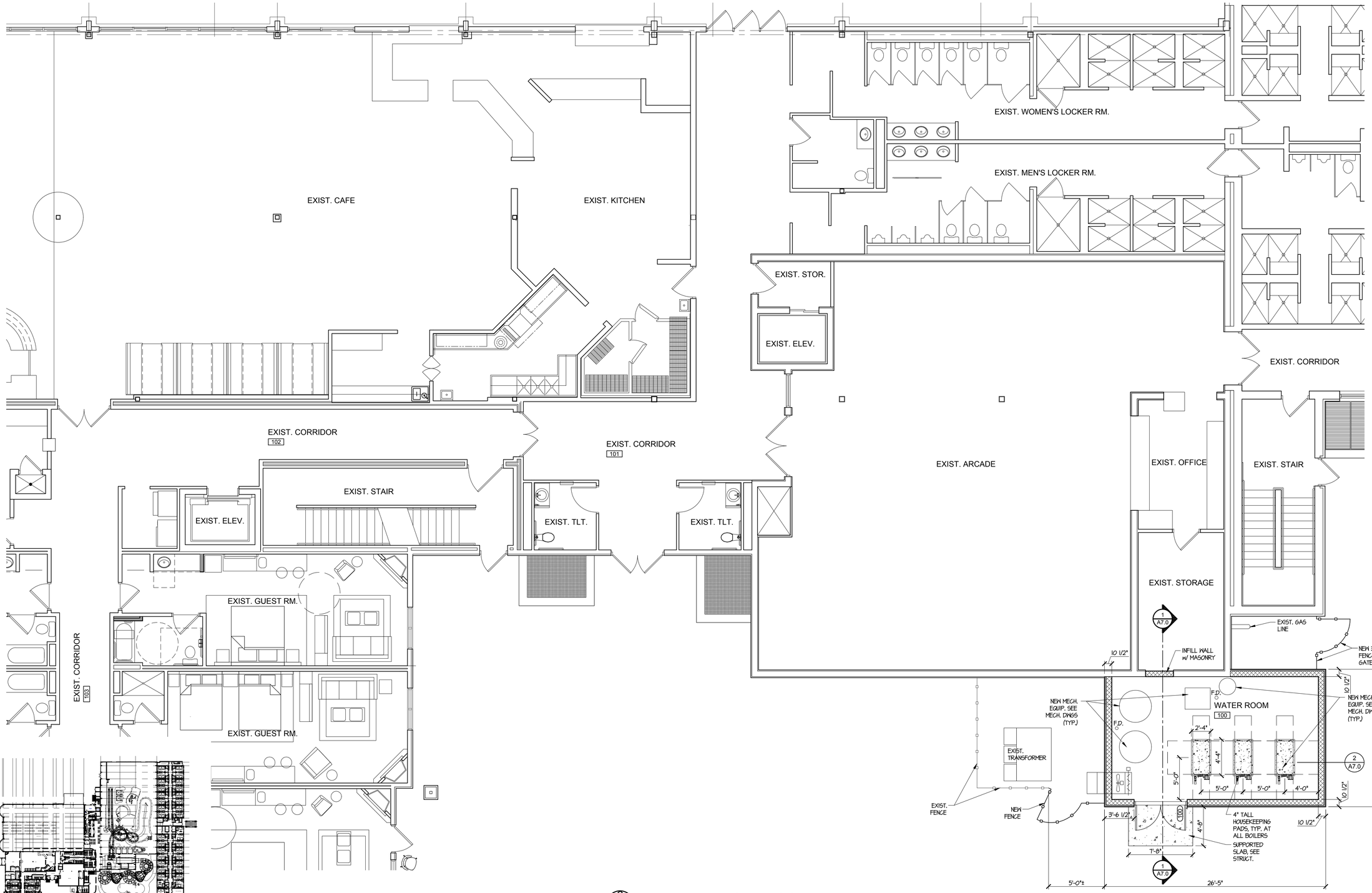

PARTIAL FIRST FLOOR PLAN

FULL SCALE: 3/16" = 1'-0"

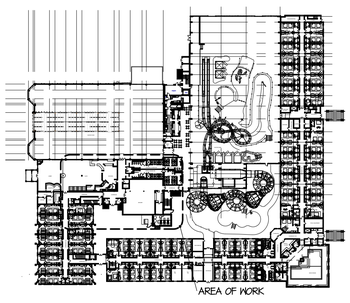

FIRST FLOOR PLAN

NOT TO SCALE

TSSF ARCHITECTS, INC.

ARCHITECTS INTERIORS PLANNERS

122 N. WASHINGTON AVENUE SAGINAW, MICHIGAN

BOILER ROOM ADDITION AND RENOVATIONS FOR:

ZEHNDER'S SPLASH VILLAGE

FRANKENMUTH, MICHIGAN

NO.	DATE

DRAWN BY G.E.C.

DATE 12/05/25

APPROVED

SHEET NO.

A2.1

PROJECT NO.

2529

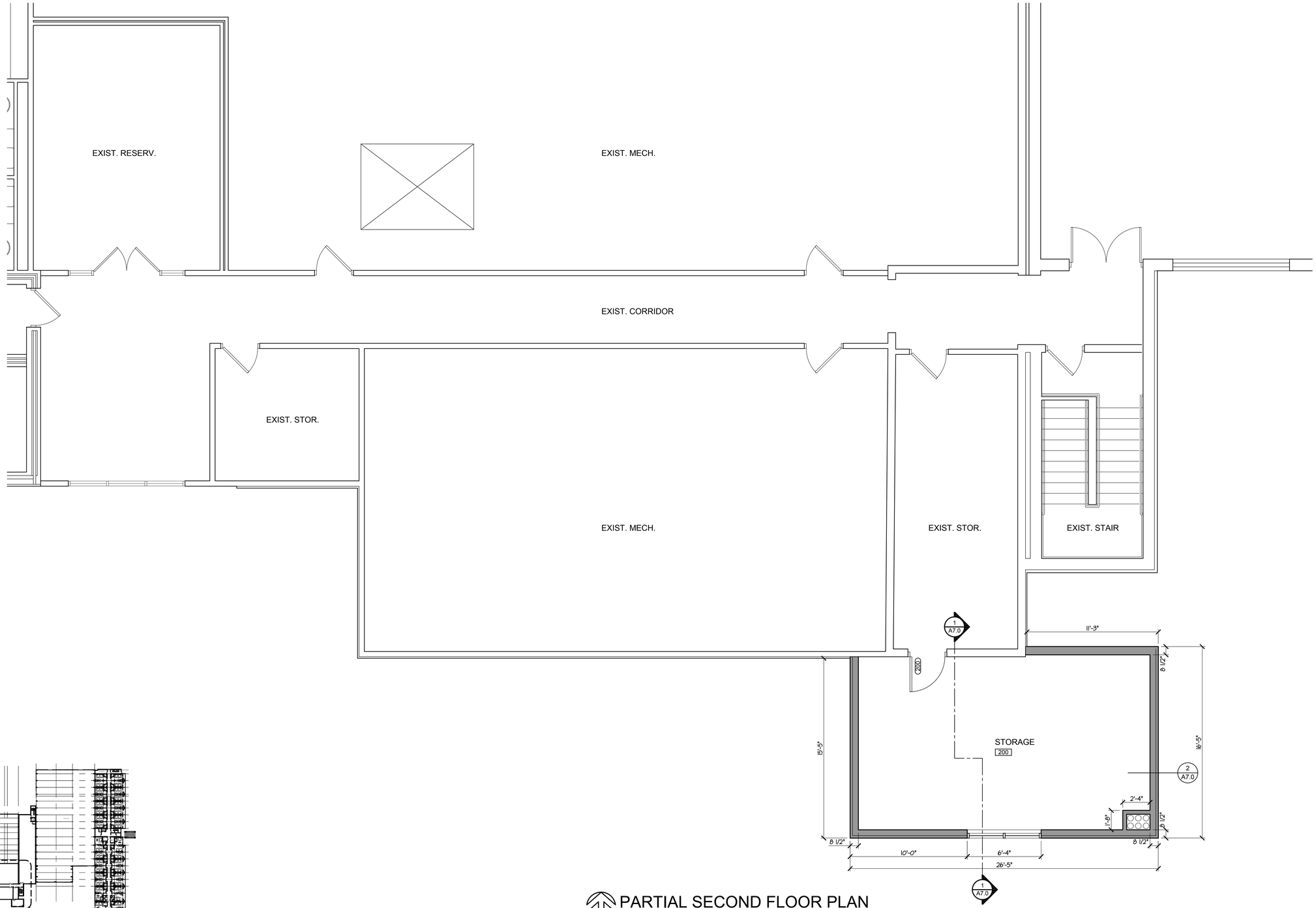

PARTIAL SECOND FLOOR PLAN
FULL SCALE: 1/4" = 1'-0"

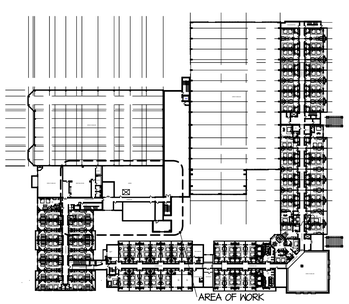

SECOND FLOOR PLAN
NOT TO SCALE

TSSF ARCHITECTS, INC.
ARCHITECTS INTERIORS PLANNERS
122 N. WASHINGTON AVENUE SAGINAW, MICHIGAN

BOILER ROOM ADDITION AND RENOVATIONS FOR:
ZEHNDER'S SPLASH VILLAGE
FRANKENMUTH, MICHIGAN

NO.	DATE

DRAWN BY G.E.C.
DATE 12/05/25
APPROVED

SHEET NO.
A2.2

PROJECT NO.
2529

FINISH SCHEDULE

ROOM NO.	ROOM NAME	FLOORS		BASE	WALLS								CEILING		REMARKS
					NORTH		EAST		SOUTH		WEST				
		MATERIAL	FINISH		MAT.	FIN.	MAT.	FIN.	MAT.	FIN.	MAT.	FIN.	TYPE	HEIGHT	
100	WATER ROOM	CONC	SEALED	V	EX/ CMU	PT	CMU	PT	CMU	PT	CMU	PT	GYP	B.O.S.	-
101	EX. CORRIDOR	EX	EX	EX	EX	EX	EX	EX	EX	EX	EX	EX	ACT	MATCH EXIST.	-
102	EX. CORRIDOR	EX	EX	EX	EX	EX	EX	EX	EX	EX	EX	EX	ACT	MATCH EXIST.	-
103	EX. CORRIDOR	EX	EX	EX	EX	EX	EX	EX	EX	EX	EX	EX	ACT	MATCH EXIST.	- 1
200	STORAGE ROOM	CONC	VCT	V	EX/ GYP	PT	GYP	PT	GYP	PT	GYP	PT	ACT	8'-0"	-

FINISH SCHEDULE KEY AND NOTES

GYP	GYPSUM BOARD
V	4" COVE VINYL BASE
VCT	VINYL COMPOSITE TILE
PT	PAINT
EXP	EXPOSED
CMU	CONCRETE MASONRY UNIT
S. CONC.	SEALED CONCRETE
B.O.S.	BOTTOM OF STRUCTURE
ACT	ACOUSTICAL CEILING TILE
EX	EXISTING TO REMAIN

DOOR SCHEDULE NOTES:

1 INSTALL NEW ACOUST. TILES, PAINT EX. GRID

DOOR SCHEDULE

DOOR NO.	TYPE	MAT.	SIZE			FRAME		DETAILS			CLASS RATING	HARDWARE/ REMARKS
			WIDTH	HT.	THICK	TYPE	MAT.	HEAD	JAMB	SILL		
100	A	HM	3'-0"	7'-0"	1 3/4"	I	HM	6/A7.0	1/A3.0	-	90	B1, E1, H1, K, M2, O, P, R2, W, X, Y (1)(2)(3)
200	A	HM	3'-0"	7'-0"	1 3/4"	I	HM	3/A3.0	2/A3.0	-	90	B1, E1, H1, M2 (2)

DOOR SCHEDULE NOTES:

(1) PAIR OF DOORS

(2) ACCESS CONTROL SYSTEM BY OWNER

(3) GALVANIZED DOOR AND FRAME.

ABBREVIATION KEY:

ALUM - ALUMINUM
HM - HOLLOW METAL
SCW - SOLID CORE WOOD
STL - STEEL
WD - WOOD

DOOR HARDWARE LEGEND

KEY	DESCRIPTION	MANUF./ FINISH	KEY	DESCRIPTION	MANUF./ FINISH
A	PASSAGE LOCKSET	-	J1	SPRING LOADED HINGE	IVES/ SATIN NICKEL
B1	OFFICE/ ENTRY LOCKSET	FURNISHED BY OWNER	J2	WALL STOP	ROCKWOOD/ SATIN NICKEL
B2	STOREROOM LOCKSET	SCHLAGE/ MATCH EXISTING	K	KICK PLATE	ROCKWOOD/ SATIN NICKEL
B3	CLASSROOM LOCKSET	-	L	LATCH GUARD PLATE	-
B4	PRIVACY LOCKSET - NO KEY	-	M1	CLOSER	LCN/ SATIN NICKEL
C1	PANIC DEVICE		M2	CLOSER WITH INTEGRAL STOP	LCN/ SATIN NICKEL
C2	PANIC ON LOCAL ALARM	-	N	LOUVERS	-
C3	DELAYED EGRESS PANIC DEVICE	-	O	COORDINATOR	IVES/ SATIN NICKEL
D1	PUSH/ PULL		P	ASTRAGAL	NATIONAL GUARD
D2	EXTERIOR PULL		R1	AUTO FLUSH BOLTS	-
D3	SOFT CLOSE BARN DOOR HDWE	-	R2	MANUAL FLUSH BOLTS	-
D4	BARN DOOR STYLE PULL	-	R3	MANUAL SURFACE BOLTS	-
E1	ELECTRIC STRIKE	DORMA KABRA, FURNISHED BY OWNER	R4	DEAD BOLT	-
E2	ELECTRIC LATCH	DORMA KABRA	S	HAZARDOUS SIGNAGE	-
E3	MAGNETIC LOCK	SCHLAGE M400 SERIES ON FIRE ALARM	T	AUTO DOOR BUTTON	-
E4	MAGNETIC HOLD-OPEN	-	U	THUMB-TURN LOCK W/ KEY	-
E5	-	-	V	VISION PANEL	-
E6	-	-	W	WEATHER STRIPPING	NATIONAL GUARD
E7	MANUAL ADA PUSH BUTTON	-	X	ADJUSTABLE SWEEP	NATIONAL GUARD
F	-	-	Y	THRESHOLD	NATIONAL GUARD, ADA
G	PADDLE LATCH OPERATION	-	Z	WOOD THRESHOLD, SEE ID DWGS.	-
H1	1 1/2 PAIR BUTT HINGES	IVES/ SATIN NICKEL	AA	-	-
H2	2 PAIR BUTT HINGES	IVES/ SATIN NICKEL	BB	BARN DOOR LOCK	-
H3	CONTINUOUS HINGE	IVES/ SATIN NICKEL	CC	STEP PLATE AND HANDLE	-
H4	T & B OFFSET PIVOTS	-	DD	PEEP HOLE	-
H5	DBL. ACTING HINGES	-	EE	LOW VOLTAGE ADA OPERATORS	-
I	SPRING LOADED HOLD OPEN	-	FF	SMOKE SEALS	-

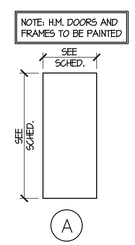

DOOR TYPES
SCALE: 1/4"= 1'-0"

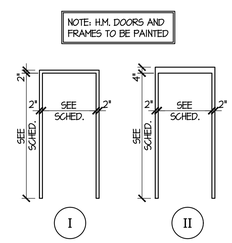

FRAME TYPES
SCALE: 1/4"= 1'-0"

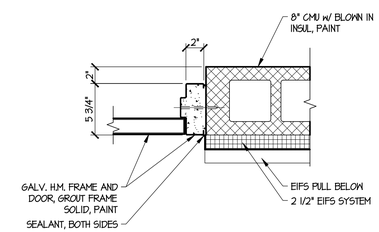

1 A3.0 JAMB DETAIL
SCALE: 1 1/2" = 1'-0"

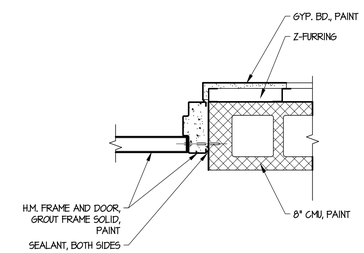

2 A3.0 JAMB DETAIL
SCALE: 1 1/2" = 1'-0"

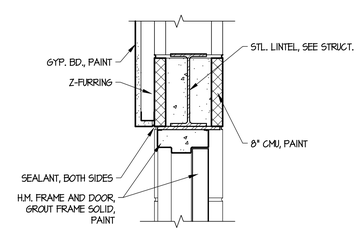

3 A3.0 HEAD DETAIL
SCALE: 1 1/2" = 1'-0"

TSSF ARCHITECTS, INC.
ARCHITECTS PLANNERS
122 N. WASHINGTON AVENUE SAGINAW, MICHIGAN

BOILER ROOM ADDITION AND RENOVATIONS FOR:
ZEHNDER'S SPLASH VILLAGE
FRANKENMUTH, MICHIGAN

NO.	DATE

DRAWN BY G.E.C.
DATE 12/05/25
APPROVED

SHEET NO.
A3.0

PROJECT NO.
2529

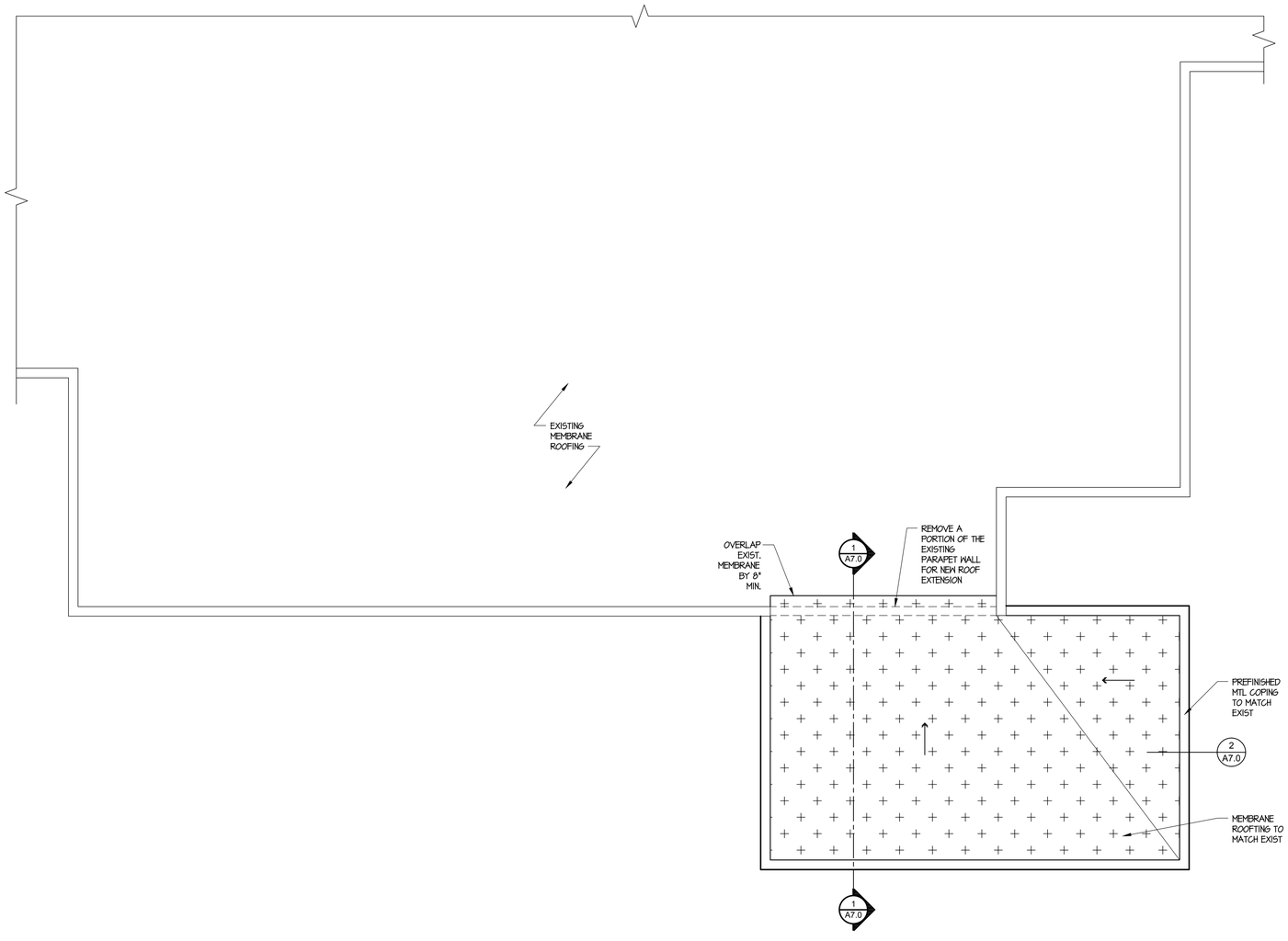

PARTIAL ROOF PLAN

SCALE: 1/4" = 1'-0"

TSSF ARCHITECTS, INC.
ARCHITECTS INTERIORS PLANNERS
122 N. WASHINGTON AVENUE SAGINAW, MICHIGAN

BOILER ROOM ADDITION AND RENOVATIONS FOR:

ZEHNDER'S SPLASH VILLAGE

FRANKENMUTH, MICHIGAN

NO.	DATE

DRAWN BY G.E.C.

DATE 12/05/25

APPROVED

SHEET NO.

A4.0

PROJECT NO.

2529

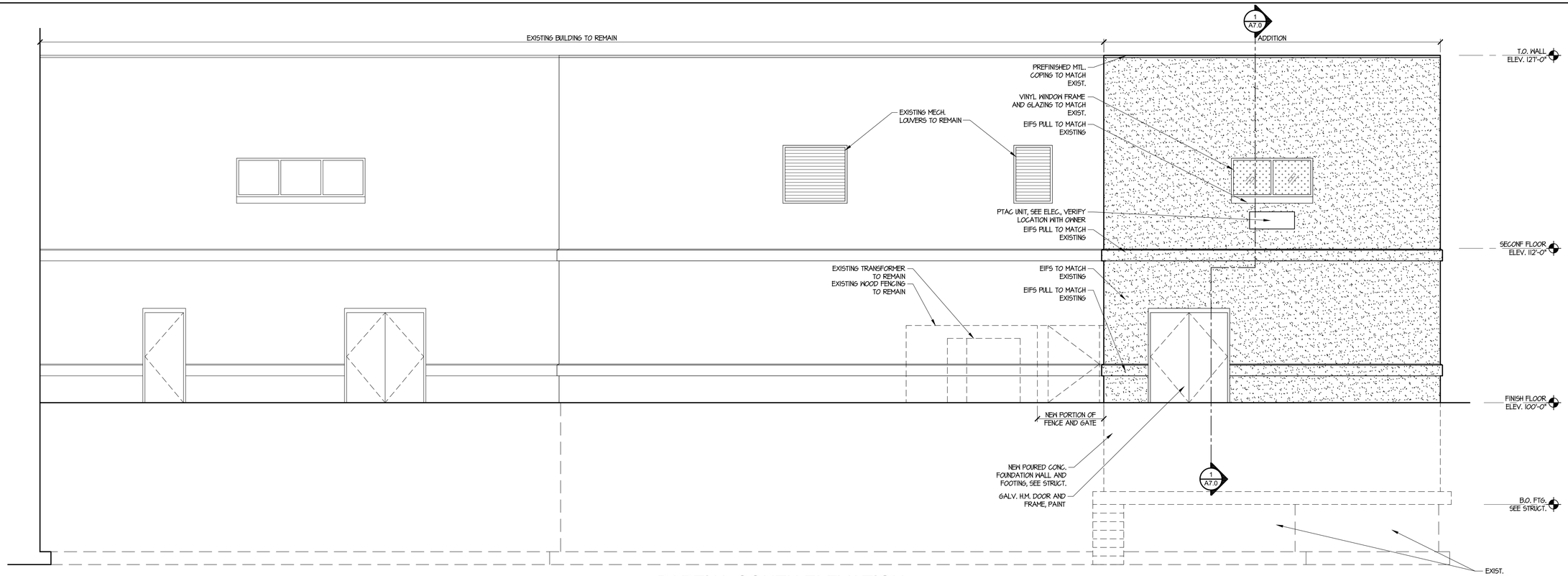

PARTIAL SOUTH ELEVATION

SCALE: 1/4" = 1'-0"

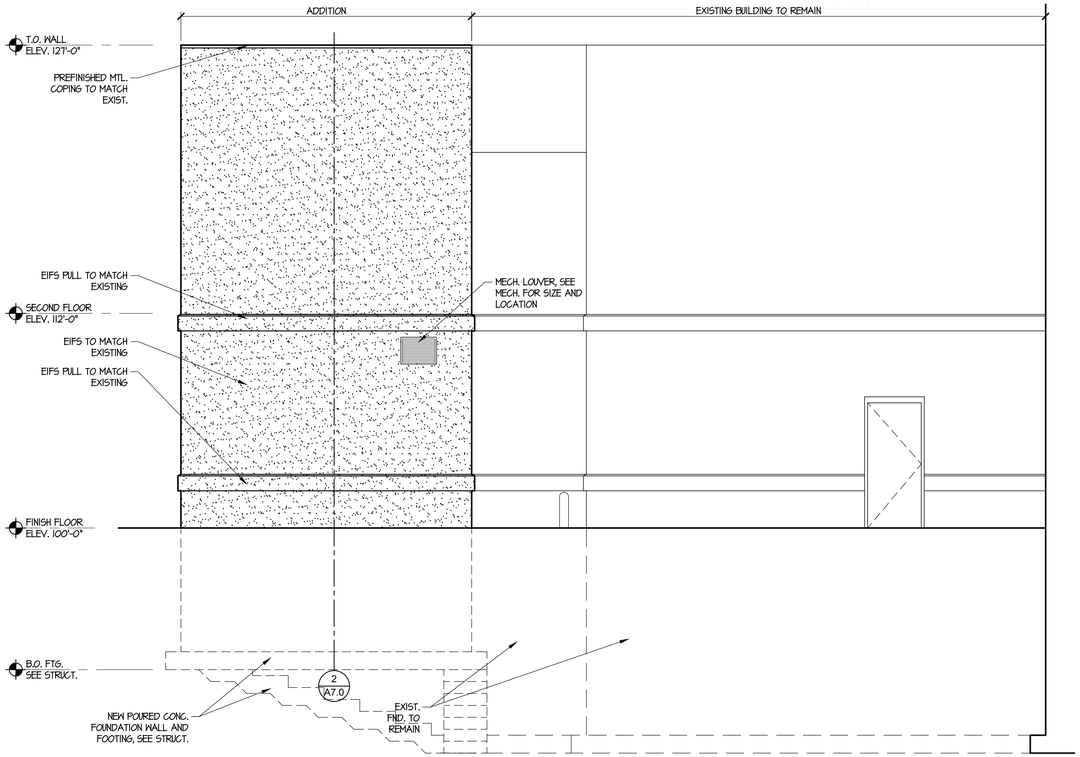

PARTIAL EAST ELEVATION

SCALE: 1/4" = 1'-0"

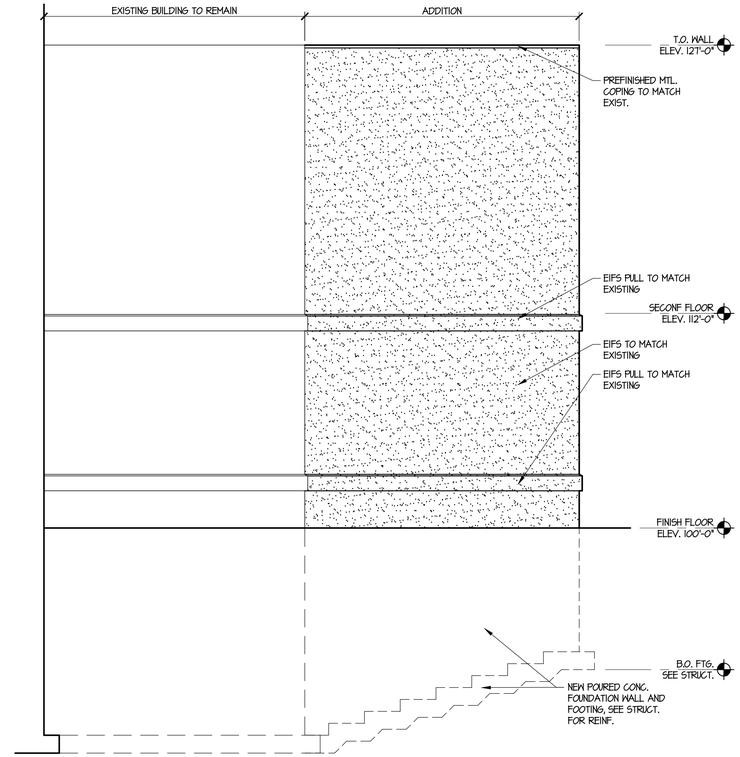

PARTIALWEST ELEVATION

SCALE: 1/4" = 1'-0"

TSSF ARCHITECTS, INC.
ARCHITECTS INTERIORS PLANNERS
122 N. WASHINGTON AVENUE SAGINAW, MICHIGAN

BOILER ROOM ADDITION AND RENOVATIONS FOR:

ZEHNDER'S SPLASH VILLAGE

FRANKENMUTH, MICHIGAN

NO.	DATE

DRAWN BY **G.E.C.**

DATE **12/05/25**

APPROVED

SHEET NO.

A5.0

PROJECT NO.

2529

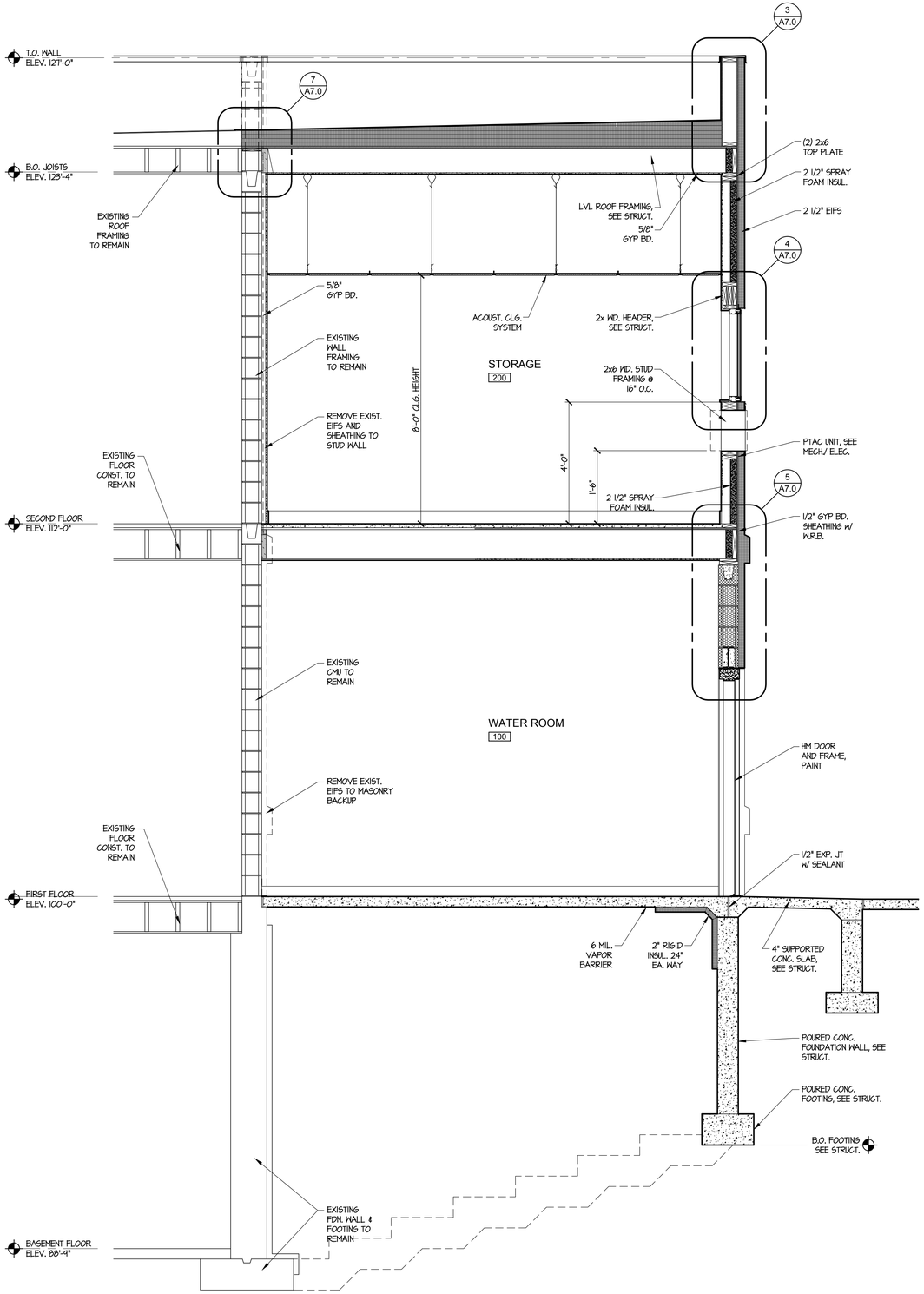

1 A7.0 WALL SECTION
SCALE: 1/2" = 1'-0"

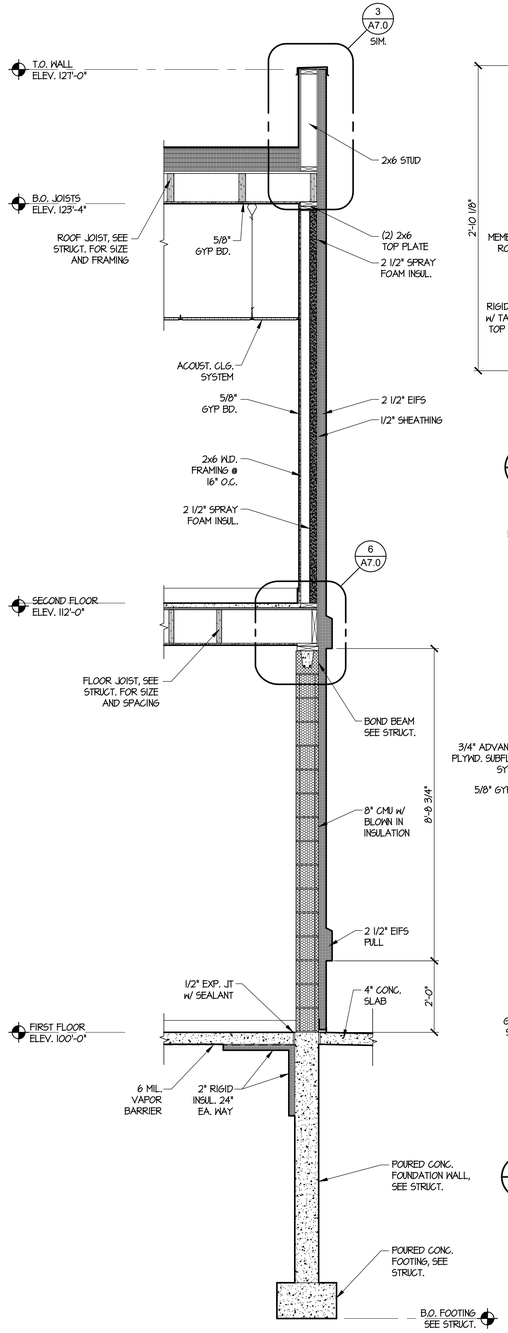

2 A7.0 WALL SECTION
SCALE: 1/2" = 1'-0"

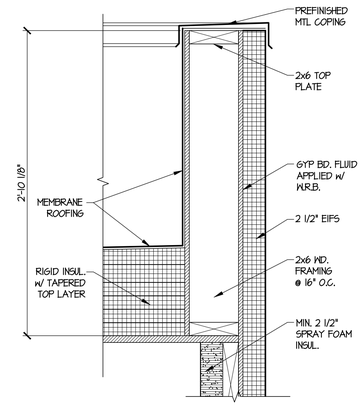

3 A7.0 PARAPET DETAIL
SCALE: 1 1/2" = 1'-0"

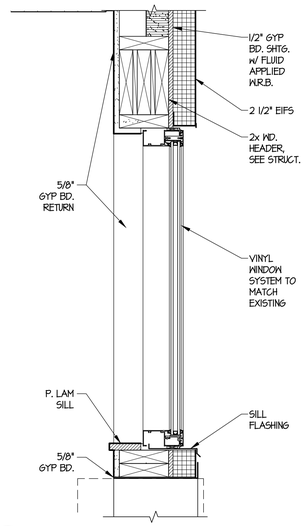

4 A7.0 WINDOW DETAIL
SCALE: 1 1/2" = 1'-0"

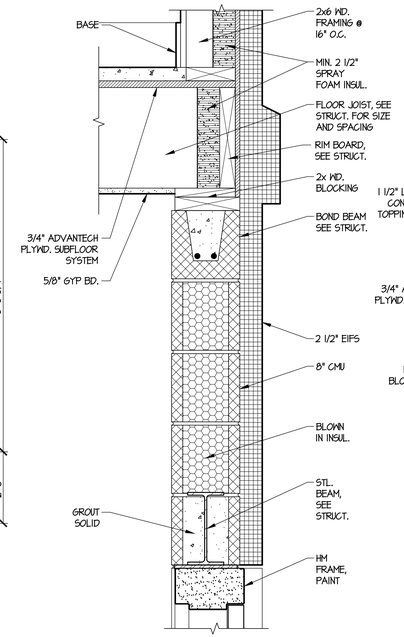

5 A7.0 WALL DETAIL
SCALE: 1 1/2" = 1'-0"

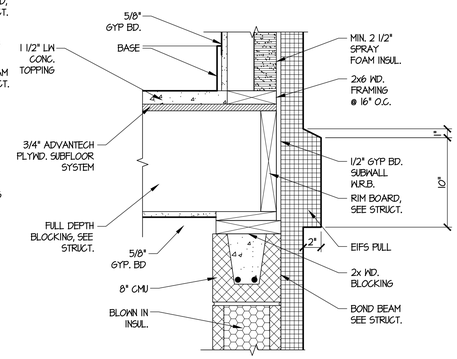

6 A7.0 WALL DETAIL
SCALE: 1 1/2" = 1'-0"

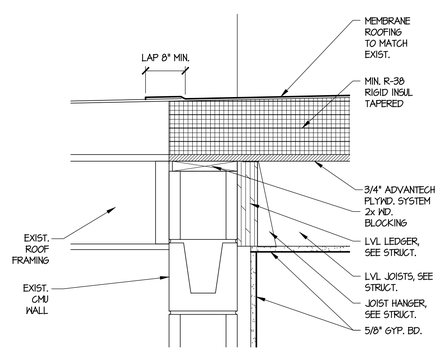

7 A7.0 ROOF DETAIL
SCALE: 1 1/2" = 1'-0"

TSSF ARCHITECTS, INC.
ARCHITECTS INTERIORS PLANNERS
122 N. WASHINGTON AVENUE SAGINAW, MICHIGAN

BOILER ROOM ADDITION AND RENOVATIONS FOR:
ZEHNDER'S SPLASH VILLAGE
FRANKENMUTH, MICHIGAN

NO.	DATE

DRAWN BY G.E.C.
DATE 12/05/25
APPROVED

SHEET NO.
A7.0

PROJECT NO.
2529

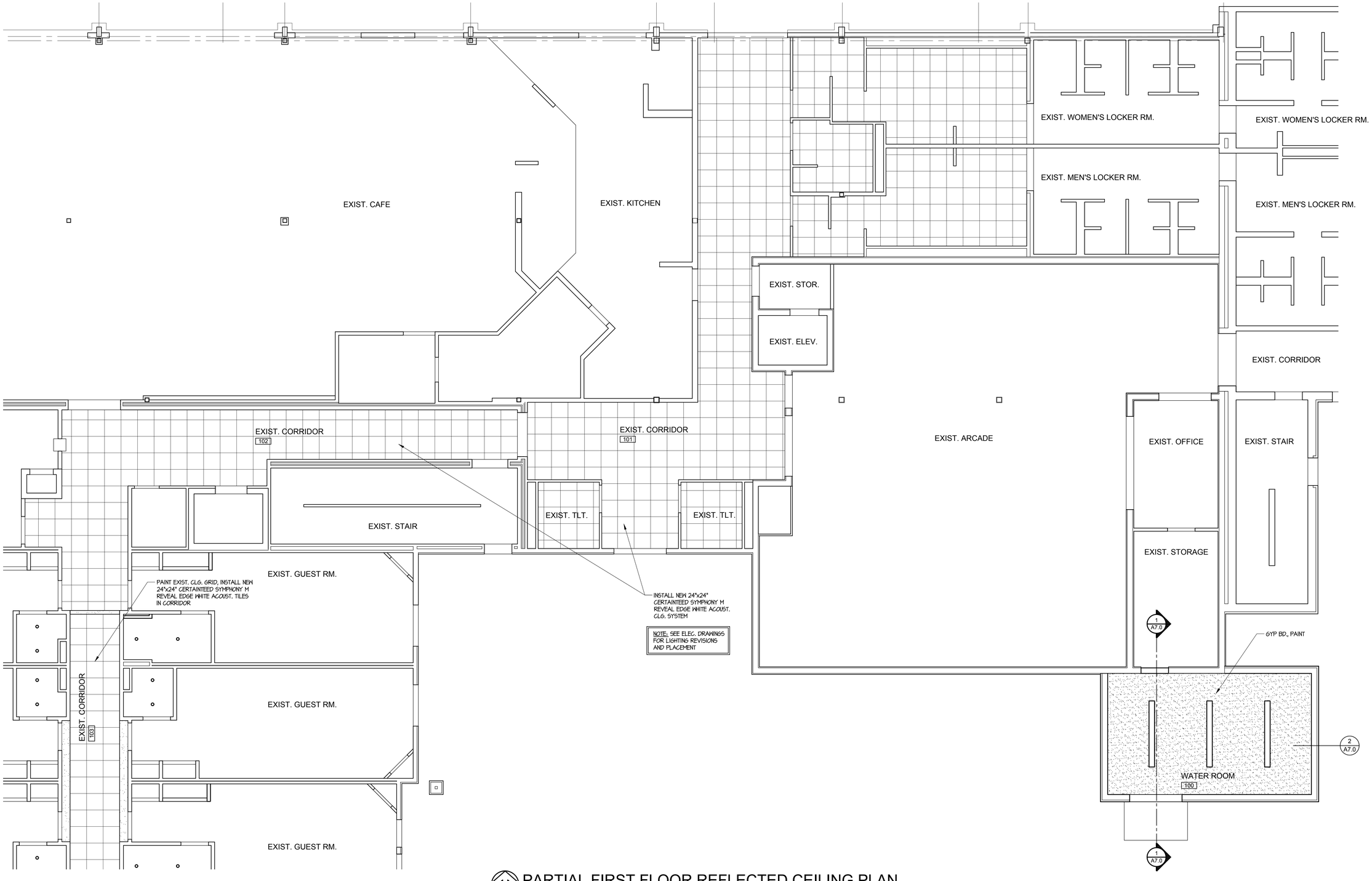

PARTIAL FIRST FLOOR REFLECTED CEILING PLAN

SCALE: 3/16" = 1'-0"

TSSF ARCHITECTS, INC.

ARCHITECTS INTERIORS PLANNERS

122 N. WASHINGTON AVENUE SAGINAW, MICHIGAN

BOILER ROOM ADDITION AND RENOVATIONS FOR:

ZEHNDER'S SPLASH VILLAGE

FRANKENMUTH, MICHIGAN

NO.	DATE

DRAWN BY G.E.C.

DATE 12/05/25

APPROVED

SHEET NO.

A9.1

PROJECT NO.

2529

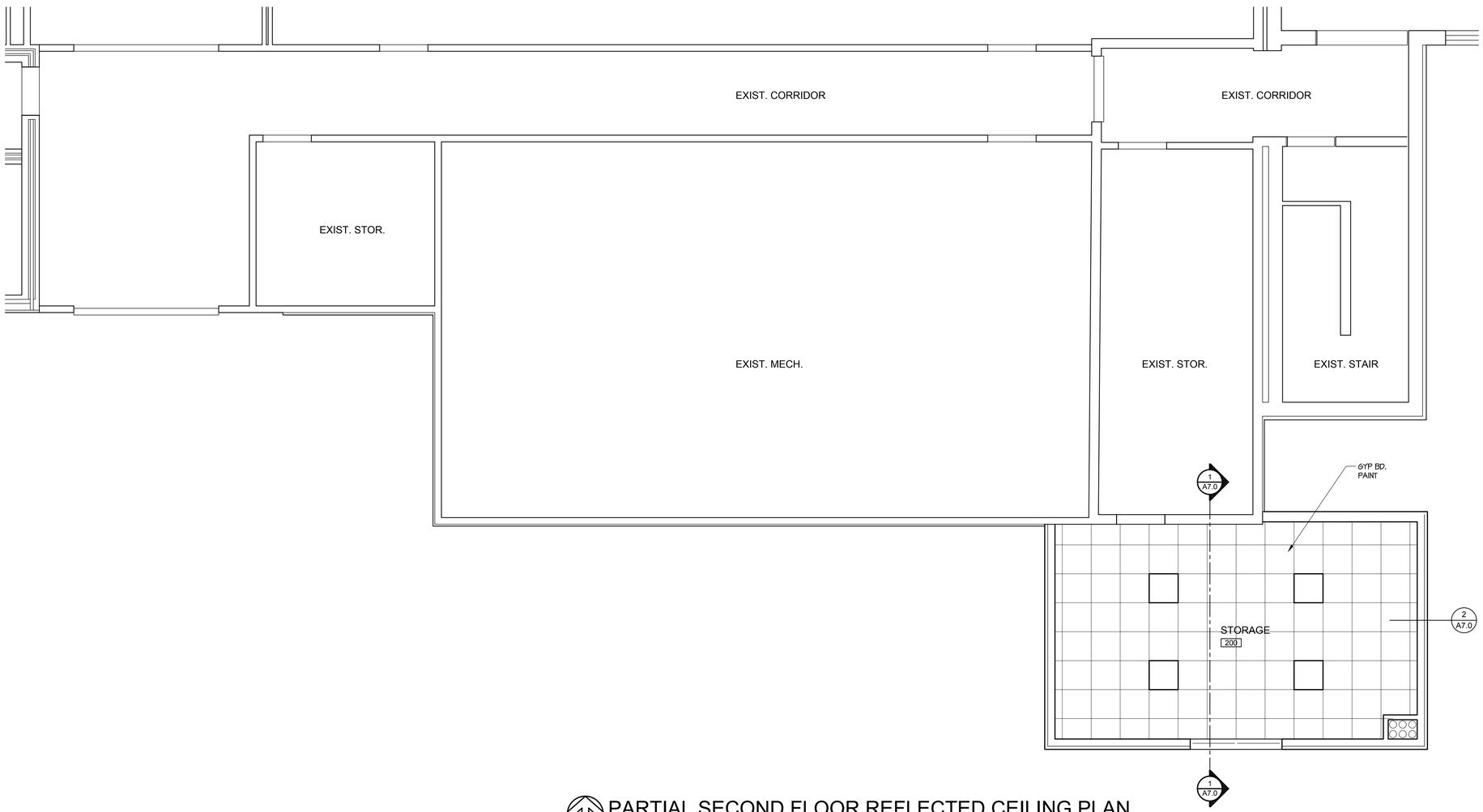

PARTIAL SECOND FLOOR REFLECTED CEILING PLAN
SCALE: 1/4" = 1'-0"

TSSF ARCHITECTS, INC.
ARCHITECTS INTERIORS PLANNERS
122 N. WASHINGTON AVENUE SAGINAW, MICHIGAN

BOILER ROOM ADDITION AND RENOVATIONS FOR:
ZEHNDER'S SPLASH VILLAGE
FRANKENMUTH, MICHIGAN

NO.	DATE

DRAWN BY G.E.C.
DATE 12/05/25
APPROVED

SHEET NO.
A9.2

PROJECT NO.
2529