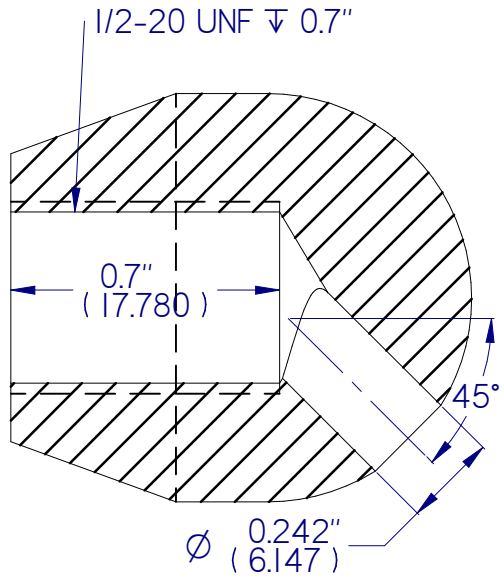

SECTION A-A

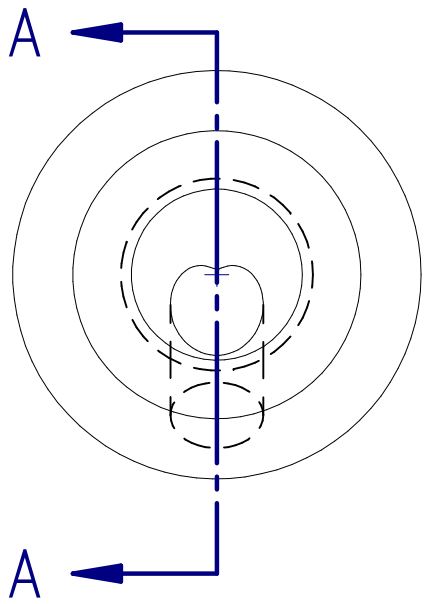

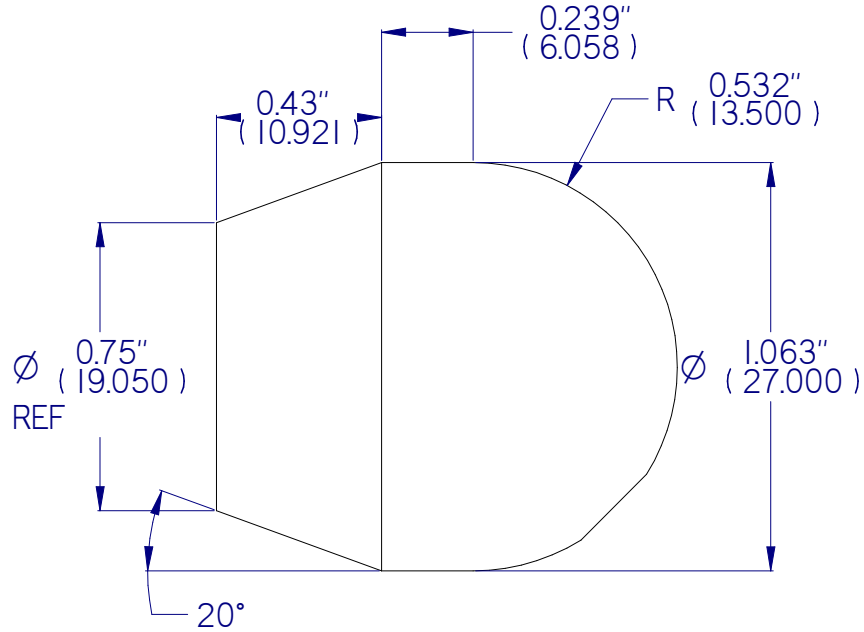

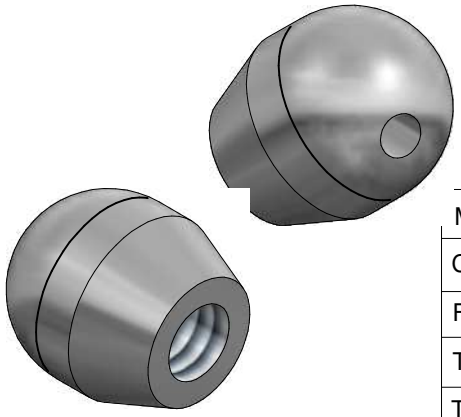

DIMENSIONS ARE IN INCH
UNLESS OTHERWISE SPECIFIED

MATERIAL	Aluminum, 7075-T6
CONDITION	
FINISH	
TOLERANCES	±0.004" ON LENGTHS, ±0.002" ON DIAMETERS, +0.002"/-0.000" REAMED HOLES, +0.004"/-0.000" DRILLED HOLES, ±0.5° ON ANGLES UNLESS NOTED OTHERWISE
TREATMENT	
PROCESS	

REV	DATE	BY	DESCRIPTION

DRAFT FILE CREATED: 4/27/2018
LAST SAVED 4/27/2018

DRAWN YAHN GRAY APPROVED RICK ALEXANDER

DWG NO.	DRAWING	REV.	SHEET
	Handle	E	QC