STABILIZED HELIUM NEON LASER SYSTEM
MODEL: 25-STP-912

Output Specifications	
Minimum CW Power Output (mW)	1.0
Center Wavelength in Vacuum (nm)	632.991420
Beam Diameter at $1/e^2$ (mm)	0.54
Beam Divergence (mrad)	1.50
Transverse Mode	> 99% TEM_{00}
Polarization	Linear > 1000:1
Warm-up Time, Frequency Lock (minutes)	< 10
Amplitude Noise, 30 Hz to 10 MHz (RMS)	0.1%
Frequency Tunability Range, Blue Side (MHz)	50 - 600
Amplitude Tunability Range, typical (mW)	0.60 – 1.40
Coherence Length:	
1 Hour (Meters)	> 300
8 Hours (Meters)	> 30
1 Month (Meters)	> 30
Amplitude Stability:	
1 Hour (%)	± 0.1
8 Hours (%)	± 0.1
1 Month (%)	± 0.2
Frequency Stability:	
1 Hour (MHz)	< ± 1
8 Hours (MHz)	± 1
1 Month (MHz)	± 10

Electrical Specifications	**Laser Head**	**Power Supply**
Start Voltage (kVDC)	<10	-
Operating Voltage (VDC)	1600 ± 100	80 to 260 VAC @ 47 – 63 Hz
Operating Current (mA)	4.0 ± 0.2	1.2/115VAC 0.6/230VAC

Single Frequency Adapter (SFA) Electrical Specifications	
Input Voltage (VDC)	12.0
Input Current (A)	2.0

Environmental Specifications	**Operating**	**Non-Operating**
Temperature (°C)	15 to +35	-20 to +80
Relative Humidity (%, non-condensing)	0 to 90	0 to 90

Regulatory Compliance	
Laser Safety	IEC 60825-1:2014
Electrical Safety	IEC 61010-1:2010 + A1
Certifying Body	TUV Rheinland
RoHS 3	EU 2015/863
Product Markings	cTUVus, CE, WEEE

MADE IN USA

+1 (760) 539-7169 215 Bingham Drive, San Marcos, CA 92069 contact@pacificlasertec.com

Laser Head

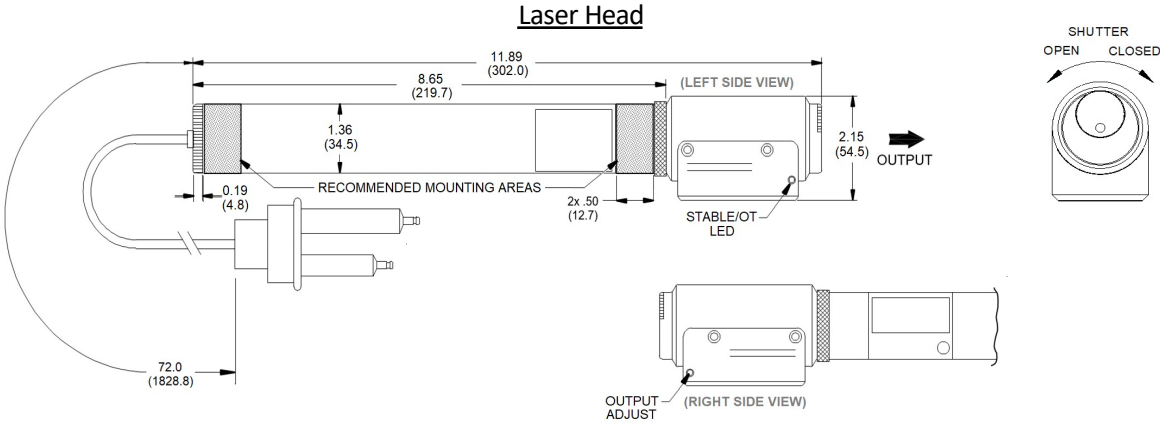

Power Supply

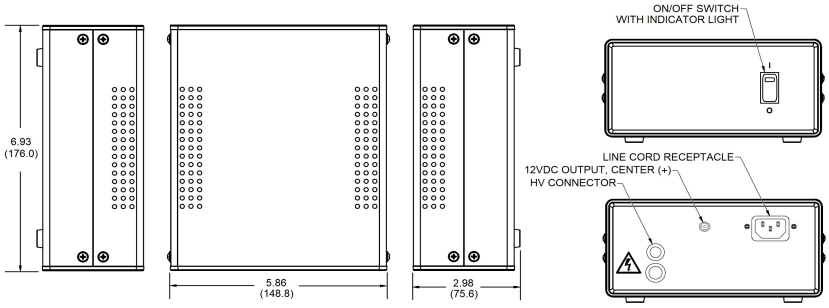

Please see Pacific Lasertec part number 05-LPL-851-040 for additional power supply specifications

LASER CLASSIFICATION		
US 21 CFR 1040.10	Compliant	Class IIIa
IEC 60825-1:2014	Compliant	Class 3R
US FDA Accession Number		9320815

EXPORT INFORMATION	**LASER**	**POWER SUPPLY**
ECCN	EAR99	EAR99
HTTS	9013.20.0000	8504.40.9510
Country of Origin	United States	United States

THESE PRODUCTS ARE SOLD IN ACCORDANCE WITH UNITED STATES EXPORT ADMINISTRATION REGULATIONS. DIVERSION CONTRARY TO U.S. LAWS IS PROHIBITED.

Information contained herein is for reference only and subject to change without notice.

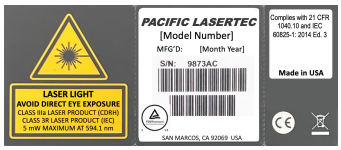

© Pacific Lasertec, LLC. All Rights Reserved