PONTE GIULIO

TECHNICAL HANDBOOK | INSTALLER'S GUIDE

Hints and Tips to Make the Bathroom Environment Secure

PONTE GIULIO

Comfort and Care

Throughout the world, society is seeing a gradual increase in the percentage of older people. The "baby boomer" generation is aging and the effect of this trend can be seen with the percentage of people over-65 years of age living in the United States.

The possibility of living in your own home, perhaps adapted to changing needs over the years, can help to maintain a good quality of life until the last days.

This approach would also have an immediate impact on the country's health care spending; being able to assist older people at home in collaboration with families or other more active older people who voluntarily offer help to the community could prove to be a practical and sustainable solution.

The simplest and cheapest intervention in any part of the house, and particularly in the bathroom, is the installation of a grab bar. This safety product allows anyone – young or older – to have a support close at hand. More than one can be installed and with different shapes and features depending on the area; the handles to be placed near the washbasin are different from those for the toilet or shower.

Have You Seen Our YouTube Channel?

Learn more about Ponte Giulio products with these informational videos on our YouTube channel!

Vinyl Coated Grab Bars

Bathroom on a Budget

5 Ways to Install a Rounded Grab Bar

HUG Removable Shower Seat

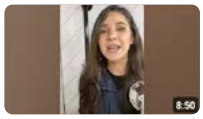

Ergonomic Hand Shower Holder

GRAB BARS CAN BE ADDED **ANYWHERE** IN A HOME

Ponte Giulio offers grab bars for every budget and design preference.

Choose from stainless-steel, vinyl coated or designer styles.

> *"The best grab bar is the one properly installed and available for use today."*

SOLO | PRESTIGIO PLUS | VINYL COATED | STAINLESS STEEL

PONTE GIULIO

Basic Grab Bar: **Installation** and **Tips**

1. Find the studs in the wall. Use a stud finder. Mark with a pencil where both sides of the studs are.
2. Install blocking if studs are not where the grab bar is needed.
3. Place painter's tape where the grab bar will be installed. Mark drill points on painter's tape on the wall. PRE-DRILL pilot holes – drill through the painter's tape. Stop when you hit the stud.
4. Install the first screw on one end of the grab bar. Put a screw about 90% of the way in when you hear and feel resistance stop.
5. Use a level to be sure the grab bar is straight.
6. Mark holes with a pencil on second side and pre-drill the pilot hole.
7. Remove painter's tape.
8. Install the first screw on the second side – all the way.
9. Tighten up the first screw on the 1st side.
10. Pre-drill 2 more pilot holes on both ends of the grab bar and install screws. These may need to be at an angle to reach the stud.
11. Install all screws and tighten. Do not overtighten – to avoid stripping the screws.
12. To achieve maximum load capacity – install 3 screws on each end of the grab bar.
13. Snap the flange covers of the mounting flange into place.

Tips

1. When installing into 16" on center studs, select 16", 32", and 48" grab bars because they easily install and reach the existing studs.
2. Wear safety glasses when drilling
3. Standard height for installing a horizontal straight grab bar is 34" to 36" from the floor. Install at a height that is most comfortable for homeowner – a tall person may need the grab bar installed higher while a short person may be more comfortable using a grab bar installer lower.
4. If installing in tile, use a Diamond Drill Bit and slow drill speed, so you are less likely to crack the tile.
   A hammer drill may damage the tile.
5. Apply poly-sealant / caulk if installed in a shower or other wet area.
6. Select screws for the wall material on each project. Stainless steel screws are recommended in the bathroom to avoid rust.
7. If assistance is needed with grab bar placement, contact an Occupational Therapist. If clients have been referred to an OT following a diagnosis or injury, call that OT for a recommendation and home evaluation.
8. ADA guidelines do NOT apply at private homes – install to best meet homeowners needs.
9. Grab bars are not just for older folks or those with a disability, anyone at any age can fall.
10. Grab bars may be installed in a horizontal or vertical direction.

PONTE GIULIO

Tools and Materials Needed

1. Drill
2. Phillips Head Drill Bit 1/8" – if using screws
3. Level
4. Tape Measure
5. Stud Finder
6. 2" wall screws (stainless steel) that are appropriate for your wall material.
7. Pencil or marker to use on Painter's tape
8. Painter's tape – to mark on
9. Poly-sealant or caulk if installed in wet area
10. Diamond drill bit, if installing into tile
11. Safety Glasses
12. Grab Bar

Problems You May Encounter

What if There are No Studs?

1. Studs or blocking provide the most secure installation and should be used if possible.
2. Mark where the studs are located – painter's tape works well.
3. Determine where to mount the grab bar and if the grab bar will be horizontal or vertical.
4. Determine a convenient height for the homeowner – higher or lower based on their needs.
5. Can blocking be added to the inside of the wall? **Note: If blocking can not be added, consider anchors that can be used.**
6. Can external blocking be added to the wall?
7. Review anchor systems that will work with the wall material and meet the load capacity requirements of the grab bar.
8. Possible anchors: Snap Toggles or WingIts
9. If using anchors, be sure they will support the load capacity of the grab bar.
10. Follow the directions on the anchor system.

PONTE GIULIO

SECOND PHOTO

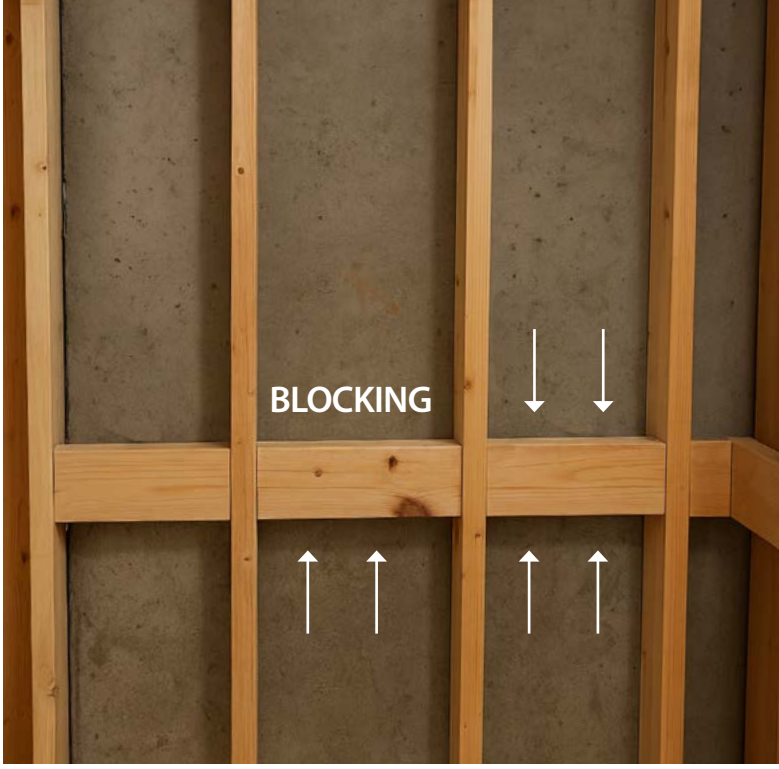

Blocking Basics

Installing bathroom safety products including grab bars and shower seats require a secure mounting point. Studs can be used for grab bars and some shower seats if the mounting points are where the studs are located.

To Make Installation Easier – Add BLOCKING Between Studs When Walls are Open.

1. Measure the opening, cut plywood, a 2 x 10 or 2 x 12 to fit the opening.
2. Mounting the blocking board FLUSH inside the framing studs
3. Screw the blocking board between the studs

TIP: Take photos of where the blocking has been placed and add measurements for future use.

TIP: Installing blocking provides a safe, secure mounting location.

TIP: Even if a homeowner is not planning to add grab bars or a shower seat currently – if a remodel is happening and the walls are open, save the homeowner lots of money by adding blocking when the walls are open.

Existing Bathroom – Blocking Options

1. Blocking can be added in an existing bathroom but it requires the removal of drywall.
2. Remove the drywall where the blocking needs to be added.
3. Add the blocking between the studs as described above.
4. Replace and repair the dry wall
5. Paint the area.
6. Install the safety product into the blocking

If the other side of the bathroom wall is a closet, it may be possible to remove the drywall from the closet and install the blocking directly behind the bathroom wall from the backside. The drywall in the closet can then be replaced and repaired.

External Blocking – When Wall Can Not be Opened

When there are no options for adding blocking inside a wall, adding external blocking may be a solution.

External blocking involves mounting a 2 x 10 or 2 x 12 directly on the bathroom wall, ensuring it is secured into the existing studs with screws. The board should have the ends and edges shaped and sanded before mounting to the wall. Once in place, paint the board to match the wall and after the paint dries, a safety product can be installed directly in the external blocking.

Shower Seats always need to have studs or blocking to ensure a safe and secure mounting. Shower seats cannot be installed using anchors.

Grab Bars can be installed into studs, blocking or with appropriate load capacity anchors. There are multiple anchor systems available.

PONTE GIULIO

Basic **Cleaning** Instructions

Product Care:

Each product may have different cleaning recommendations based on the materials used to manufacture the item. To check a specific product, consult the technical sheet located on our website at www.PonteGiulio.com for specific instructions.

Basic Cleaning Instructions:

1. Wipe the product using a soft, moist cloth soaked in liquid (dish) soap and warm water.
2. Non-abrasive cleaners like Formula 409 or Fantastic diluted with water may be used.
3. Do not use abrasive or grainy cleaners, abrasive detergents, strong acids, or chlorine bleach since they will not improve the cleaning of the product and may lead to finish, color, or product deterioration.
4. Rinse with clean water
5. Dry with a clean, soft cloth
6. Cleaning can be done as often as necessary. Items used daily may be wiped down after use.

Our vinyl coated products have anti-microbial protection embedded in the vinyl and will wipe clean with just warm water or non-abrasive cleaner that has been diluted in water.

PONTE GIULIO

What is the Ponte Giulio **Warranty?**

If a product arrives to you damaged, please take photos of both the product and the box, and email the photos to ORDERS@PonteGiulioUSA.com as soon as possible.

Our customer service team will supply information on getting a replacement product or part and how (or if) the damaged product should be returned. Always follow the specific installation instructions so all products are safely installed.

LIMITED WARRANTY

If a product fails due to a defect in material or workmanship during the time periods listed below for each product, Ponte Giulio USA Corp. ("Ponte Giulio") will replace or repair it free of charge.

Simply contact the distributor you originally purchased from or Ponte Giulio directly at 877-766-8301 for replacement information.

1. **Grab Bars:** (including folding grab bars), Bath Accessories, Shower Seats and Benches: **Lifetime Guarantee** (please refer below)
2. **Shower Curtain Rods: Lifetime Guarantee** (please refer below)
3. **Crescent Shower Rods:** 1 Year
4. **Vitreous China Sinks:** 2 Years
5. **Adjustable Mirrors:** 1 Year

Ponte Giulio Limited Warranty

EXCEPTIONS and RESTRICTIONS

This warranty does not cover products which have not been installed or used in accordance with the instructions concerning installation and use set forth in the owner's manual or installation instructions, and when the recommendations and warnings included are not observed.

This warranty does not cover products that have been modified or dismantled partially or totally; or have been used in a negligent fashion and as a consequence has suffered damages attributable to the consumer, individual, or hardware not authorized by Ponte Giulio.

This warranty does not cover products which have been abused, altered, damaged, misused, cut or worn. Making substitutions or modifying this product in any way will void your warranty.

This warranty does not cover the damages as a result of disaster such as fire or acts of God, including flooding, earthquake, or electric storms, etc.

Limitation of Liability

Other than the limited warranty stated above, to the extent permitted by law, Ponte Giulio disclaims all other implied or express warranties, including all warranties of merchantability and/or fitness for a particular purpose. This warranty is your sole remedy and Ponte Giulio shall not be liable for any damages (whether direct, indirect, incidental, special, consequential, exemplary, or otherwise, including lost revenues and lost profits) arising out of any theory of recovery, including statutory, contract or tort.

Notwithstanding the term of any limited or implied warranty, or in the event that any limited warranty fails of its essential purpose, in no event will Ponte Giulio's entire liability exceed the purchase price of this product. Some states and provinces do not allow the exclusion or limitation of incidental or consequential damages so the above limitations or exclusions may not apply to you. This limited warranty gives you specific legal rights, and you may also have other rights which vary from state to state and province to province.

Ponte Giulio assumes no liability for any personal injury or property damage caused by improper assembly, installation or use of this product.

Cleaning: Please use non-abrasive cleaners such as "Fantastic", "409" or just warm soapy water for cleaning. Cleaners with grit should be avoided.

PONTE GIULIO

How to **Measure** Grab Bars

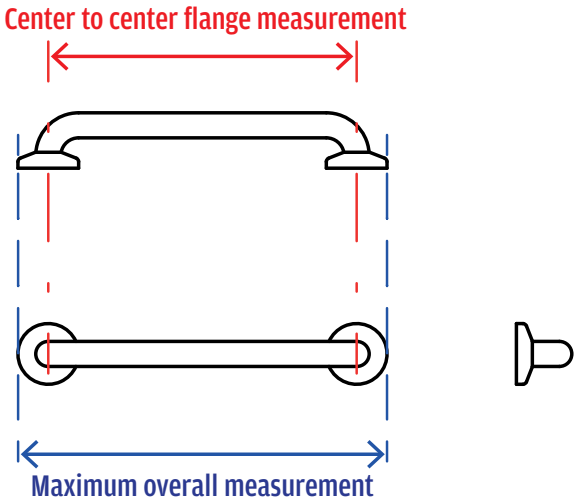

Grab bars are measured from **center flange** to **center flange.** This means a grab bar is often longer end-to-end than the length ordered. The grab bar style and flange placement may affect the overall length. If ordering for a tight space, consider the end-to-end length.

See Technical sheet for exact product measurements.

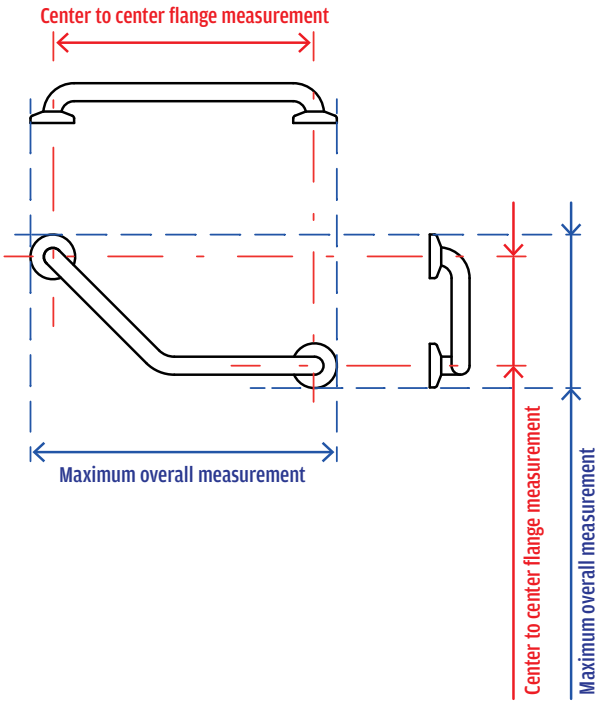

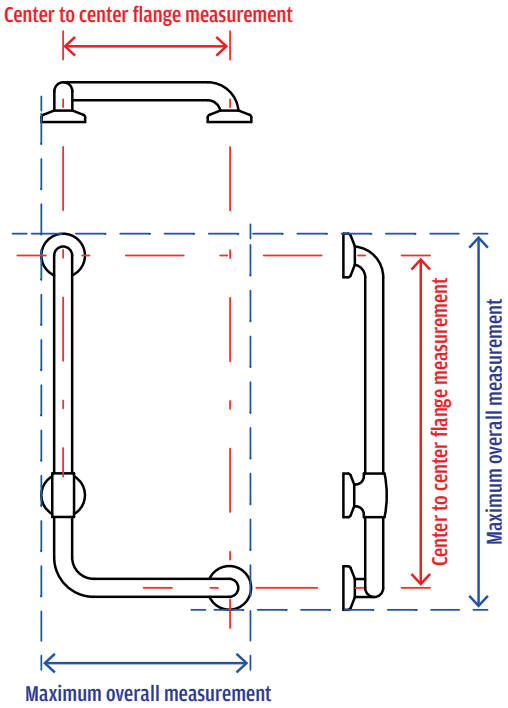

PONTE GIULIO

Where to Install a Grab Bar?

- Anywhere extra support and assistance is required.
- The bathroom is usually the first location for grab bar installation: by the toilet, vertically at the shower/bath entry point (most common fall location), and inside the shower.
- When installing by a toilet – mount the grab bars horizontally or vertically or both.

But that is just the beginning.

- In the bedroom or walk-in closet where someone might dress.
- In the bedroom, by the bed if someone needs help getting up.
- In the kitchen, by cabinets that might require a reach, or by the work area where food preparation takes place.
- If the home has a stairlift – mount a grab bar at the top and bottom of the stairs to help stand up from the chairlift.
- In the entryway to help walk up steps or the mudroom, where shoes may need to be removed.
- Finally, outside in the garage or in the outside door frames to assist with stepping into the house.

"We recommend Ponte Giulio vinyl coated grab bars that hold up well to the outdoor elements."

PONTE GIULIO

Understanding **Left** or **Right Orientation** for L-Shaped Grab Bars

Left hand orientation

Right hand orientation

When ordering the L-shaped grab bars, it is necessary to specify LEFT or RIGHT orientation. To determine which orientation is needed, hold up the thumb and forefinger on both hands, making an L and backward L. The LEFT hand shows what a LEFT orientation will look like and the RIGHT hand shows what a RIGHT orientation will look like.

When installing an L-shaped grab bar, the longest side is usually vertical.

However, the longer side may be installed horizontally. Install to meet the needs of the users.

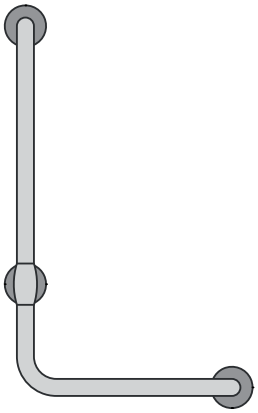

Left Orientation
Vertical Install

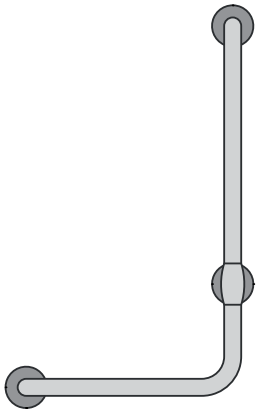

Right Orientation
Vertical Install

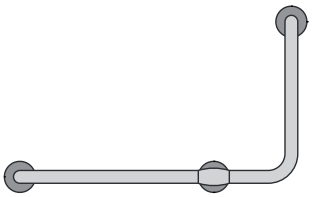

Left orientation installed with longest side horizontally

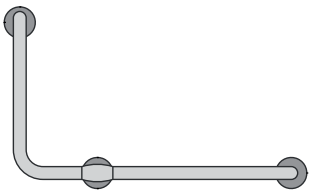

Right orientation installed with longest side horizontally

PONTE GIULIO

What Direction Should Grab Bars Be Installed?

The person using the grab bar may prefer installing their grab bar horizontally, vertically, or even at an angle.

Generally, Occupational Therapists recommend horizontal or vertical installation – since a grab bar at an angle may allow the user to slide down and fall. However, some homeowners may prefer an angled grab bar (see placement options on next page).

A vertical grab bar at the entry/exit point of the shower or bathtub will help as folks step into and out of the shower. This is the # 1 place people slip, trip, or fall in the bathroom. We recommend placing a grab bar at the entry/exit of every bathtub and shower.

A horizontal grab bar on the long wall of the shower or bathtub is good for balance while bathing. However, if studs are not in the location for installing a horizontal grab bar, consider a different length grab bar or installing the grab bar vertically into the stud.

Near a toilet, there are several options - horizontal, vertical, or L-shaped angle grab bars are often chosen. Some people may like the combination of both a horizontal and vertical grab bar within easy reach. Determine what is most comfortable for the homeowner and install to meet their needs.

If the homeowner is recovering from an illness, injury, or a recent diagnosis or is not sure what will work best for them, recommend they contact an Occupational Therapist for a home evaluation or appointment. Be sure they have photos of the bathroom for the OT to use as reference. Some installers find it advantageous to partner with a local OT, who can be called upon by the installer to do evaluations for clients.

GRAB BAR INSTALLATION OPTIONS FOR 16" ON CENTER STUDS

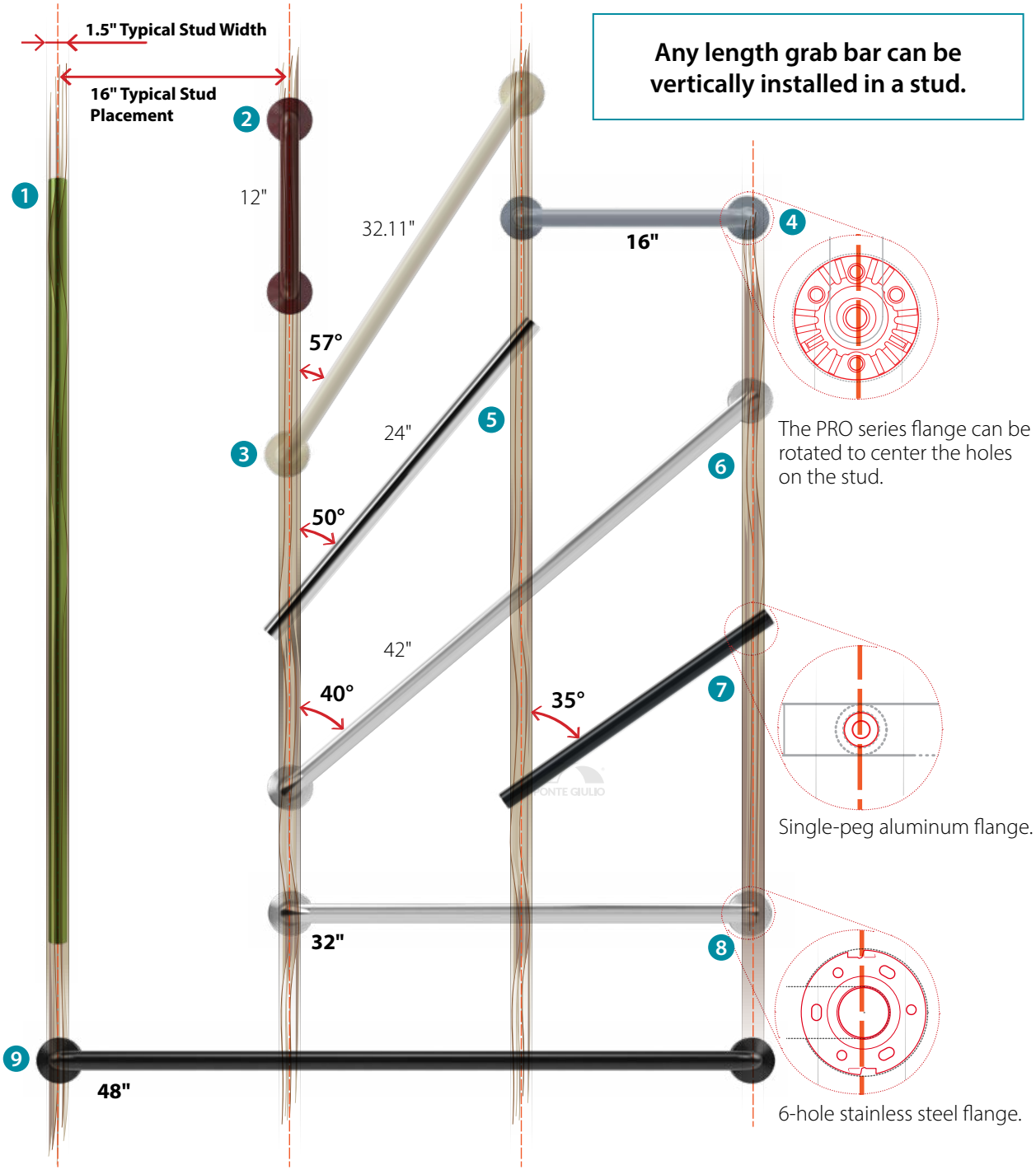

Samples for 16" on center studs Studs Shown Are 16" on center and 1.5" wide

1. G18UAS51, Prestigio Plus 48", vertical installation
2. G25JAS01, PRO series 12", vertical installation
3. G25JAS06, ProSeries 32", angle installation
4. **G25JAS02, ProSeries 16", horizontal installation**
5. G18UAS45, Prestigio Plus 24", angle installation
6. G57JAS08, Stainless steel 42", angle installation
7. G18UAS44, Prestigio Plus 18", angle installation
8. **G57JAS06, Stainless steel 32", horizontal installation**
9. **G25JAS09, ProSeries 48", horizontal installation**

PONTE GIULIO

Adding a Vertical Grab Bar to the Shower or Bathtub Entry

What Length Works Best?

As you stand in the shower or tub, hold your arm at a 90-degree angle – like you are shaking hands with someone. That's a comfortable height to hold on to your grab bar. If you have multiple height people in your home, select a **longer** grab bar that will put everyone's hand within easy reach of the grab bar.

Consider selecting a longer vertical grab bar than you think you need. **Why?**

A vertical grab bar can be useful to anyone who finds themselves on the floor for any reason. Whether your toddler has taken a tumble and you've kneeled down to assist them, or that pesky back injury has made standing from kneeling more challenging, or someone has fallen on the floor (hopefully unharmed), consider a 32" or 36" vertical grab bar to ensure that the bar is within reach to anyone for any reason. It will come in far more handy than you'd ever imagine!

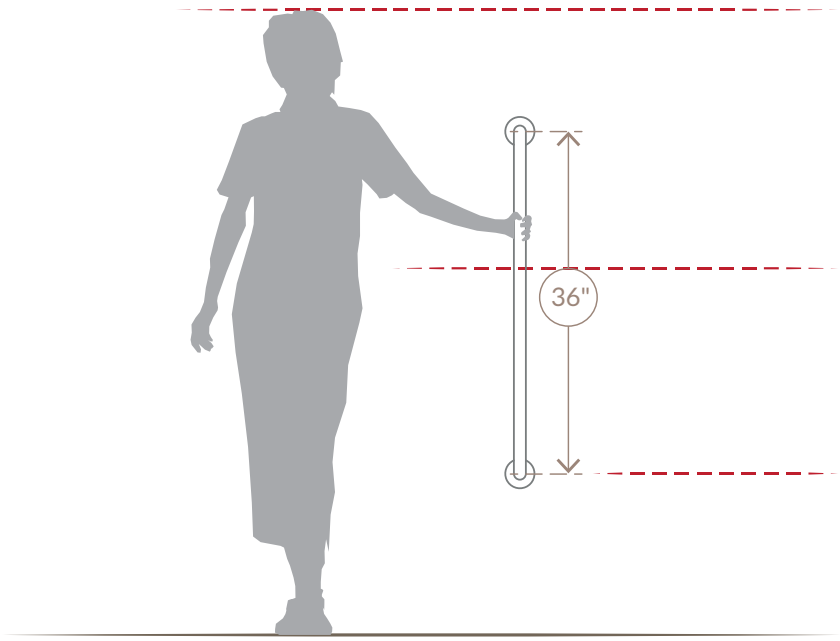

PONTE GIULIO

Grab Bars
Flange Configurations

Vinyl Coated

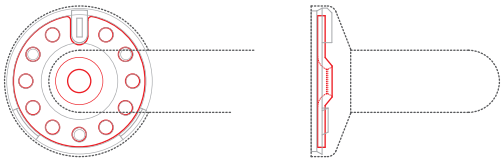

Flange 11 holes

Stainless steel - AISI 304, and Nylon flange.

- Flange held in place by a screw, so it can be rotated, if needed.
- Flange cover snap in place to cover mounting plate.
- Anti-microbial, warmer to touch, superior non-slip grip vinyl.

Pro Series

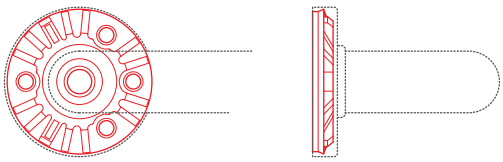

Flange 4 holes

Nylon Flange, fiberglass reinforced, Stainless steel

- Anti-microbial, warmer to touch, superior non-slip grip.
- Flange held in place by a screw, so it can be rotated, if needed.
- PRO Series is shipped without the flange attached but assembly is quick.
- Flange cover snaps in place to cover mounting flange.
- These are also vinyl coated grab bars.

PONTE GIULIO

Stainless Steel

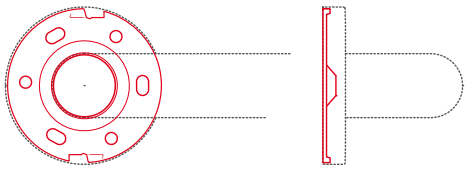

Flange - 6 holes, 3 round, 3 oval

Stainless Steel AISI 304

- Flange is welded to the grab bar.
- Flange cover snaps in place to cover mounting plate.
- If additional hole is needed, drill into flange but avoid flattening the divot.

Prestigio Plus

Single peg cylinder

Aluminum and Stainless steel

- Mount "bolt" into wall.
- Attach grab bar to "bolt" with a small Allen wrench (set key)

Solo

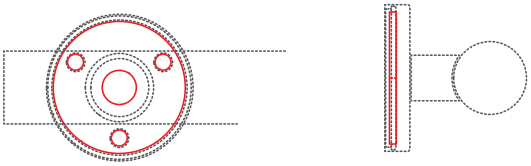

Flange 3 holes

Stainless steel - AISI 304

- Install the flange with "bolt" into the wall
- Snap the flange cover, to protect fixing flange
- Attach grab bar to the "bolt" with a small Allen wrench (set-key)

PONTE GIULIO

PRO Series
Vinyl Coated Grab Bar

WATCH THE VIDEO

Vinyl Coated
Grab Bars

Available in 11 popular color options including the BASICS: White, Black, Light Gray, Ivory, Biscuit and the VIBRANTS: Blue, Light Blue, Green, Seafoam Light Green, Red, and Yellow. These options provide colors for every project whether clients are looking to coordinate or contrast.

Vinyl coated is a great choice for installing outdoors. The vinyl holds up well to the elements.

- Anti-Microbial protection
- Warmer to the touch
- Superior non-slip grip
- Easy to clean
- Available in 11 colors
- 9 lengths 12", 16", 18", 24", 30", 32", 36", 42", 48".

PONTE GIULIO

Assembling the **PRO Series** Grab Bar

Assembling

To save on your shipping expenses, the PRO Series is shipped in a flatter box, and the flanges need to be attached before installation. It is quick and easy and should take only a minute or two.

In each box with a PRO Series grab bar you will receive:

1 – Grab Bar
2 – Black Mounting Flanges
2 – Flange covers that match the grab bar
2 – Screws to hold flange on grab bar
6 – Stainless steel screw for wood stud installation.

STEP 1 – Slide the flange cover onto the grab bar

STEP 2 – Place the flange and cover on the grab bar with flat side away from the grab bar

STEP 3 – Insert the screw in the flange and tighten with a size 8 Allen wrench

STEP 4 – You are ready to install the grab bar. Slide the flange cover over the flange and **???**.

PONTE GIULIO

PRO Series Product Knowledge

ADA COMPLIANT

ADA Compliant

The PRO Series grab bar exceeds the ADA requirements for commercial use. The 1¼" diameter is the more comfortable ADA size for both small and large hands. There is 1½" of open space between the grab bar and wall. Exceeds the 250-pound load capacity requirement.

500 pounds

330 pounds

Load Capacity

The load capacity for the 12", 16", 18", 24", 30" 32", and 36" length grab bars is 500 pounds.

The longer 42" and 48" lengths support 330 pounds.

The Vinyl Coating

The vinyl coating offers multiple benefits including permanent anti-microbial protection from fungi, bacteria, and microbes which is more hygienic.

The vinyl feels both warmer and softer than metal grab bars which is nice for people with neuropathy nerve damage in their hands. Finally, the vinyl coating provides a superior non-slip grip like sneakers on a gym floor, so when hands are dry or wet the user will be able to hold on!

PRO Series Product Knowledge

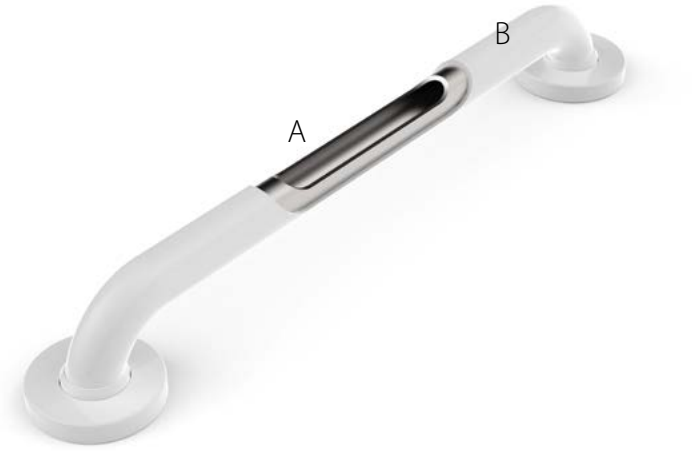

PRO Series: A Superior Grab Bar

It starts with the galvanized zinc-plated steel pipe that is 2 mm thick for durability and strength **(A)**. The anti-microbial vinyl coating is 3 mm thick **(B)** and reflects the warmth from the user's hand so it always feels warmer than a metal grab bar.

This grab bar holds up to the rigors of use for years and comes with the Ponte Giulio lifetime warranty.

A Grab Bar as a Towel Bar

Ponte Giulio has many grab bar options that can easily double as towel bars. They will add safety to the bathroom in case someone falls and grabs the towel bar for support. A grab bar properly installed will support up to 500 pounds. Sadly, a towel bar will just pull off the wall if someone were to grab it while falling.

Grab bars that are 12" or 16" are perfect for hand towels near a sink. For bath towels, a 24", 30" or 32" grab bar works very well. Having a grab bar perform double duty as a towel bar will add safety to every bathroom – safety hiding in plain sight.

PONTE GIULIO

How do Vinyl Coated Grab Bars Provide Anti-Microbial Protection?

BioCote® Silver Ion Technology is a proven, permanent protection against bacteria and fungi.

The vinyl coating on Ponte Giulio PRO Series and Vinyl Coated products are anti-microbial due to the BioCote® Silver Ion technology in the vinyl that reduces microbes, bacteria and fungi (see list at bottom of page)up to 99.9% making our products much more hygienic.

The vinyl is easy to clean, just wipe with warm water using a soft cloth and the grab bars are clean. In addition, the vinyl coating provides a superior non-slip grip that is like sneakers on a gym floor.

The vinyl coating also is softer and warmer to the touch. Vinyl Coated are SUPERIOR safety products.

BioCote® is a leading provider of anti-microbial / anti-bacterial technology to manufacturers around the world. BioCote® technology integrates anti-microbial protection into any surface or products, reducing microbes by up to 99.9%, making them much more hygienic and defending the surface against degradation, odors and staining.

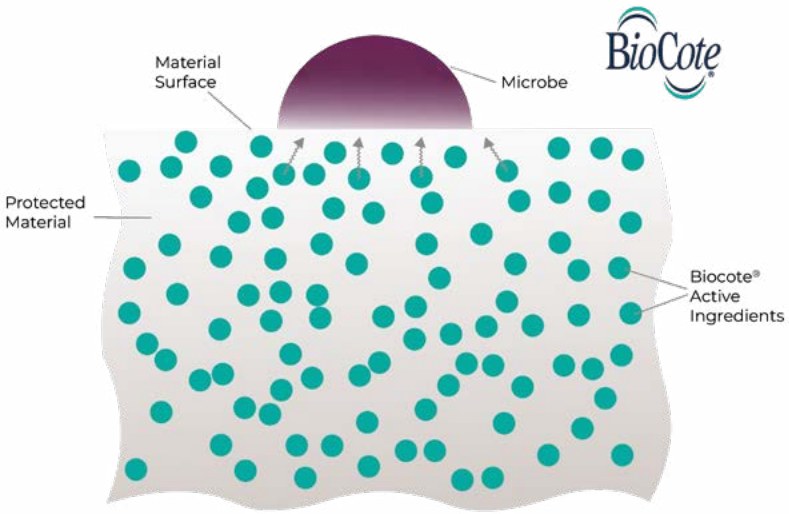

Protect against:

- **Escherichia coli (E. coli)**
- **Streptococcus**
- **MRSA and MRSE**
- **Legionella**
- **Shigella**
- **Salmonella**
- **Klebsiella**
- **Listeria**
- **Aspergillus brasiliensis and Aspergillus niger (fungi)**
- **H1N1 Virus**

Microbes cannot survive on the vinyl surface
Improved hygiene between cleanings

PONTE GIULIO

How to Lock Stainless Steel Flange Covers?

Stainless Steel grab bars are an economical choice that will not rust in wet environments and can be installed anywhere.

Installing

STEP 1 – Determine placement into stud or blocking and mark location of holes.

STEP 2 – Pre-drill holes and install stainless steel screws into studs.

STEP 3 – Slide flange cover in place, turning ***clockwise*** to lock in place.

How to Lock Stainless Steel Flange Covers?

The attached flange covers are on the grab bars. After installing the grab bar, the flange cover will lock in place, covering the mounting plate and stainless-steel screws.

1. Flange cover attaches with a ***clockwise*** turn to lock it in place. A counter-clockwise turn will snap the cover on but will NOT lock which can cause the cover to pop off.
2. There is a small tab at the edge of the flange that needs to be up a little – the tab guides the divot on the flange cover into place. Do not flatten or file the tab.
3. Do not allow caulk beyond the edge of the flange. Excess caulk will prevent the flange cover from locking in place.

PONTE GIULIO

Stainless Steel Product Knowledge

ADA COMPLIANT

ADA Compliant

The STAINLESS STEEL grab bar exceeds the ADA requirements for commercial use. The 1¼" diameter is the more comfortable ADA size for both small and large hands. There is 1½" of open space between the grab bar an wall. Exceeds the 250-pound load capacity requirement.

450 pounds

Load Capacity

The load capacity for the 12", 16", 18", 24", 30" 32", 36", 42" and 48" length grab bars is 450 pounds.

Material

Stainless steel is an iron alloy which provides resistance to corrosion especially when used in damp environments or with fresh water. Ponte Giulio uses stainless steel that will not rust, is durable, tough and strong and less likely to ding or burr.

- AISI 304 Stainless Steel
- 1.2mm thick / 18 gauge
- 1¼" diameter
- No exposed screws or mounting plate
- Available in three finishes:
  - NI – Satin/Brushed
  - N2 – Polished
  - DM – Matte Black

PONTE GIULIO

Prestigio PLUS and **Integra** Grab Bars Product Knowledge

How to install the Prestigio PLUS Peg Mount

- This flangeless design has a cylindrical peg mount that uses an Allen Wrench set key to lock in place.
- Mounting pegs are about 2" from the end of the grab bar. The end-to-end length is about 4" longer than the order length because grab bars are measured center flange to center flange.
- Available in multiple colors:
  – NI – Satin
  – N2 – Polished
  – W2 – White
  – DM – Matte Black
- End caps and mounting pegs are chrome for all **Prestigio PLUS** grab bars
- **INTEGRA** grab bars are similar, but all parts of grab bar are one color.

1. Install bolt into a stud with a stainless steel screw.
2. If no stud is available, a "snap toggle can be used as an anchor. Just be sure the toggle screw sits flush with the edge of the bolt so it does not hit when the grab bar is attached.
3. Once both bolts are attached to the wall, slide the grab bar on the bolts and secure with a small Allen wrench used as a set key.

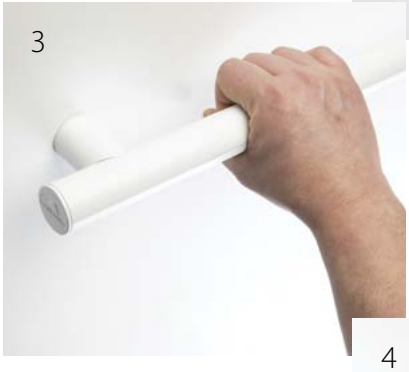

PONTE GIULIO

Prestigio PLUS Grab Bars Product Knowledge

ADA COMPLIANT

ADA Compliant

Prestigio PLUS are ADA compliant with 1¼" diameter and load capacity that exceed ADA guidelines.

450 pounds

265 pounds

Load Capacity

- 450-pound load capacity on 12", 16", 18", 24", 30" and 32" lengths.
- 265-pound load capacity on 36", 42", 48", and 65"
- 65" length should only be installed vertically.

Material

This sleek, designer style is material that has been powder coated in a variety of color options. Stainless steel will not rust, is durable, tough and strong and less likely to ding or burr. The end cap and peg mount are aluminum and chrome.

Colors

Available in multiple colors:

N1 – Satin
N2 – Polished Bright
W2 – Warm White
DM – Matte Black.

End caps and mounting pegs are chrome on all colors.

PONTE GIULIO

SOLO Grab Bar Product Knowledge

The contemporary SOLO grab bar is a decorative option with:

- a traditional round mounting flange
- AISI 304 stainless steel
- Available in 16" and 20"
- 27" length has a built in hand shower holder

Installing:

1. SOLO grab bars have a multi-hole flange for attaching to the wall with a cylinder.
2. Once you have identified where to install the handle, use anchors appropriate for the type of wall, then attach the flange. Determine placement location to install into a stud or blocking or use anchors. Use stainless steel screws and attach to wall.
3. Put the flange cover over the mounting plate.
4. To complete the installation, insert the grab bar onto the flange stud, securing by tightening the screw with an Allen wrench.

PONTE GIULIO

SOLO Grab Bar Product Knowledge

Material

Ponte Giulio uses **stainless steel** that will not rust, is durable, tough and strong and less likely to ding or burr.

- AISI 304 stainless steel
- 1¼" diameter
- ABS end caps

Special Feature

There is a hand shower head holder on one end of the G18UQL05 and G18UQR05 grab bars.

Structure

- Made entirely of AISI 304 stainless steel to guarantee durability with ABS end caps.
- The grab bars of the Solo shower line are fitted with a 21/2" diameter flange system.
- Grab bars have a 330-pound load capacity.
- Each has a stainless steel AISI 304 flange – 3 holes – with a Derlin disc for better contact with the wall and a stainless steel AISI 304 flange cover.

PONTE GIULIO

Folding Grab Bars: Little Details Make a Big Difference

Vinyl Coated, G41

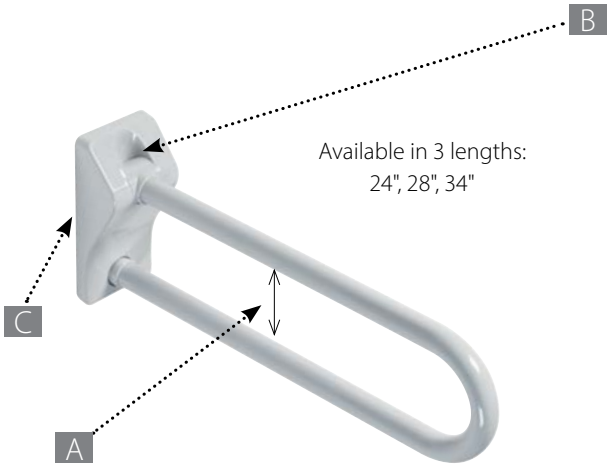

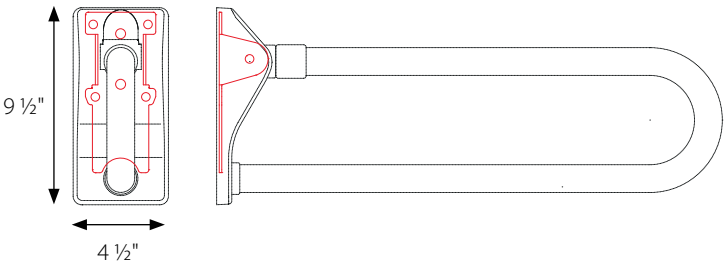

A – Less than 4" of open space between the top and bottom bar, so a child cannot get head stuck.

B – No finger pinch points. Smart design

C – Superior tension system prevents bar from falling. Bar will stop without someone moving it.

- Flange cover measures 9¼" tall and 4½" wide and covers all screws and mounting hardware.

HUG, Folding + Removable

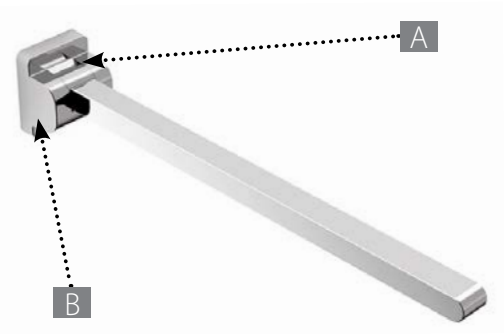

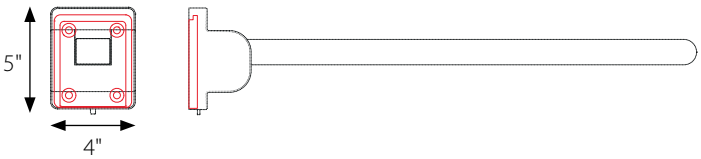

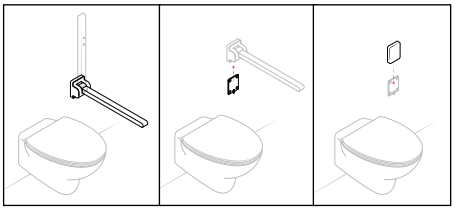

A – No finger pinch points. Smart design

B – Superior tension system prevents bar from falling.

Bar will stop without someone moving it.

- Flange is 5" tall and 4" wide.
- Grab bar can be removed and mounting plate covered.
- Available in 3 lengths: 24", 28", 34"

PONTE GIULIO

Folding Grab Bars: Little Details Make a Big Difference

Stainless Steel

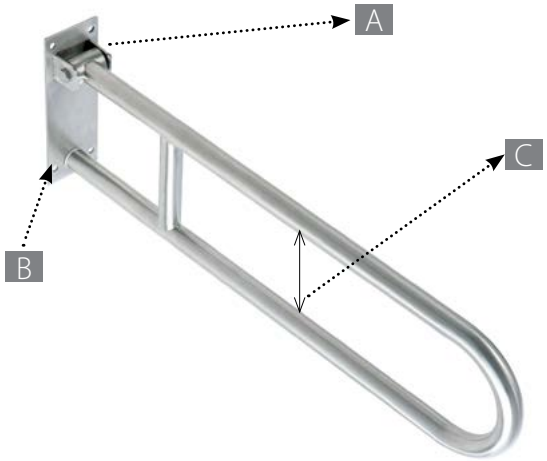

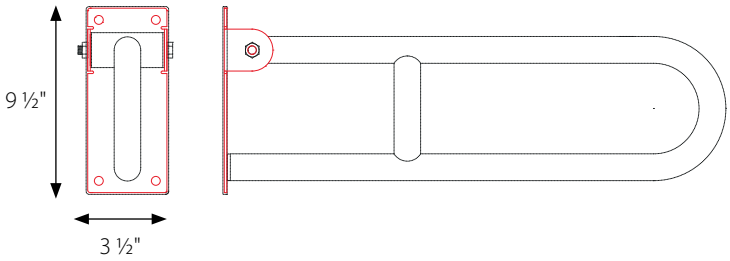

A – Superior tension system prevents bar from falling. Bar will stop without someone moving it.

B – Mounting plate is 9 ½" tall and 3 ½" wide

C – Less than 5" of open space between top and bottom bar.

- Available in 2 lengths: 24", 32".

Anti-Microbial, G25JCS49

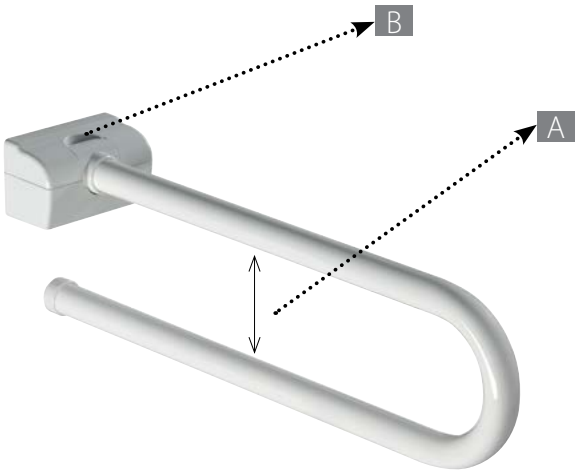

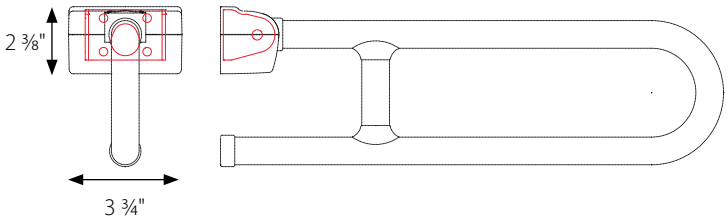

A – 5 ⅙" of open space between top and bottom bar.

B – Superior tension system prevents bar from falling. Bar will stop without someone moving it.

- Available in multiple colors.
- Vinyl coating is anti-microbial.
- Grab bar is 33 ½" long.
- Mounting plate is 3 ¾" wide and 2 ⅜" tall.
- Mounting plate cover is 5 ¼" wide.

PONTE GIULIO

Installing **Folding Grab Bars**

Installing U-Shaped Folding Grab Bars (G41, G25, Stainless Steel)

NOTES:

1. Folding grab bars should be installed into studs or blocking to ensure a secure installation.
2. Wall anchors that meet or exceed the load capacity of the Folding Grab Bar may be used if studs and blocking are not available. Be sure to determine whether the wall material will support the pressure of the Folding Grab Bar before using anchors. If possible, one vertical side of the Folding Grab Bar should be in studs and anchors could be used on the other side if blocking is not present.
3. External block can be installed for a safer installation.
4. Review the size of the fixing plate – some are much larger than expected.
5. Determine the best location for the homeowner using the Folding Grab Bar. Some people may want the unit installed lower so they can push down on the grab bar to get up, and others may want it installed higher.
6. Review the stud placement area to establish an installation plan.
7. Follow installation instructions for the specific grab bar purchased.

PONTE GIULIO

Installing **Folding Grab Bars**

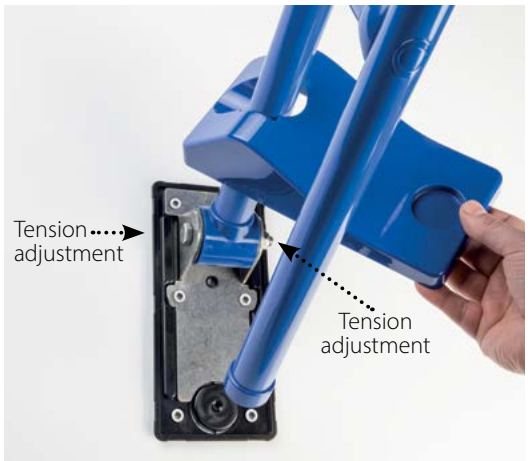

STEP 1 – Determine placement and mark the holes for pre-drilling. Be sure it is level.

STEP 2 – Slide the flange cover off

STEP 3 – Line up mounting flange, mark where screws will go. Use level to be sure unit is straight. Install into studs or blocking.

STEP 4 – Pre-drill holes.

STEP 5 – Line up flange and install screws into studs. Tighten.

STEP 6 – Check tension on folding bar. Adjust as needed.

STEP 7 – Put flange cover over flange and snap into place.

PONTE GIULIO

Installing the **HUG** Folding and Removable Grab Bar

WATCH THE VIDEO

HUG Removable Shower Seat

Installing the HUG Removable Grab Bar

NOTES:

1. Folding grab bars should be installed into studs or blocking to ensure a secure installation.
2. If the wall does not provide sufficient load-bearing strength, you should install the grab bars in a different location or add internal or external blocking.
3. Removable folding grab bars offer the advantage that they can be easily removed and installed as required without the use of special tools. They can be moved between different bathrooms or between different homes.
4. If using anchors, the anchors must meet or exceed the load capacity of the folding grab bars itself.
5. It is useful to check the dimensions of the anchor plate of folding grab bars prior to installation.
6. HUG grab bars come in 3 lengths: 24", 28", 33".
7. Optional Toilet Paper Holders, extra flanges, flange covers, and Arm Rests are available.

PONTE GIULIO

Installing the **HUG** Folding and Removable Grab Bar

STEP 1 – Determine placement and mark the holes for pre-drilling. Be sure it is level.

STEP 2 – Line up flange and install screws into studs. Tighten.

STEP 3 – Slide grab bar over flange.

STEP 4 – Lock grab bar in place.

To remove:

STEP 1 – Unlock grab bar.

STEP 2 – Slide grab bar off flange.

STEP 3 – Cover flange with optional flange cover.

PONTE GIULIO

Safety on Short Steps with the **Door Frame Grab Bar**

This Door Frame Grab Bar mounts directly into the door frame for a solid, secure installation.

Use this type of grab bar when there are several steps:

1.

- Available in either **LEFT** or **RIGHT** side installations, it is 28" long, white stainless steel.

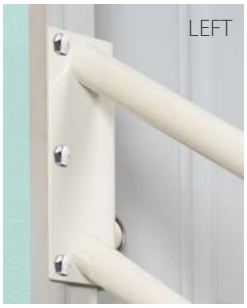

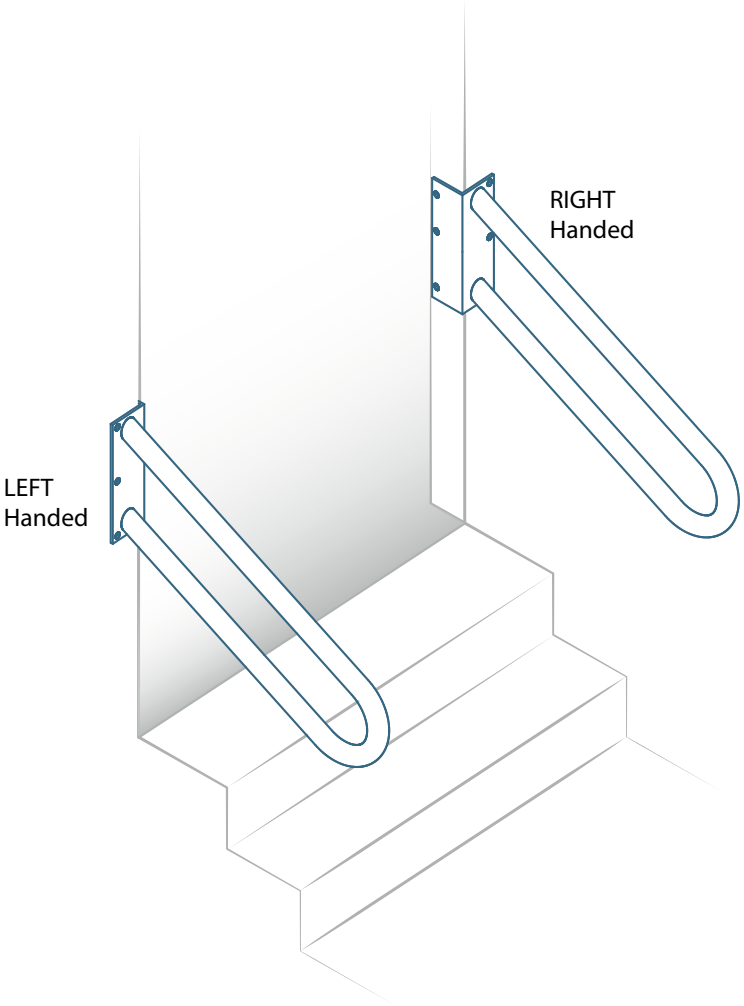

PONTE GIULIO

Shower Seats

1. We offer the greatest selection of seats - no other manufacturer in the world comes close to offering the different styles, shapes and colors that we design and manufacture including seats for both commercial and residential use.
2. Our quality seats, meet and exceed ADA guidelines, stand up to the rigors of non-stop commercial use yet appeal to residential bathroom clients.
3. Every seat is designed for functionality and safety. Our tension system prevents seats from falling and the hinge systems have no finger-pinch points. The superior materials used in these seats, frames and mounting flanges add to their strength and durability. We never stop improving our products.

PONTE GIULIO

Advantages of Seats and Benches

The Advantages of a Folding Shower Seat

- A Folding Shower Seat is mounted to the wall – at any height that works best for your client. That means if the homeowner is very tall, you can install the seat higher than the normal chair seat height of 17" to 19" – perhaps a more comfortable height is 21" – with a wall mount seat it is easily done.
- Ponte Giulio Folding Shower Seats also come with our tension hinge system, which prevents the seat from just slamming down. The tension hinge will hold the seat in place anytime pressure to move it is removed. The tension hinge can also be adjusted throughout the life of the shower seat – a ¼ turn will tighten or loosen the hinge to be the perfect amount of resistance for your client.
- Being able to sit while showering is more comfortable when someone is recovering from surgery, illness, or injury. Older adults often like the option of sitting while showering to help prevent a fall.

The Advantages of a Folding Shower Seat with Legs

- When the seat is not being used, the seat and legs fold up and out of the way. When the seat is lifted, the legs are tucked in next to the seat for compact storage.
- Legs offer additional load capacity. This means they will support additional weight. Having legs that help support a folding shower seat will offer heavy individuals a sense of security and confidence.
- Legs are adjustable between 17" and 19" – the most common heights of a chair. To help determine the best height for installing the shower seat, ask the person who will be using it to sit in their favorite, comfortable chair, and measure from the floor to the seat and install accordingly.

Where to Install a Folding Shower Seat

- Shower seats should be installed into studs or blocking to be sure they are safe and secure.
- Shower seats should be installed so the person sitting on the seat can easily reach the water controls while they are seated.
- Having a hand shower holder is convenient for someone who likes to use a shower seat so they can move the water where they need it.

PONTE GIULIO

Shower Seats and Benches

Bella, Wood

G56UHS13, N1

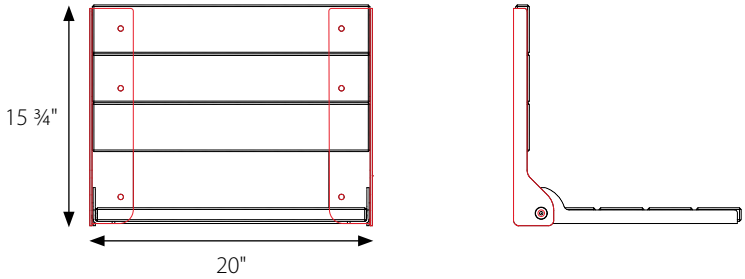

A – Strong and durable stainless steel frame, brushed finish.

B – Wood slats are 1" thick and made of finished African Okoume.

C – Frame has no finger pinch-points for safety.

- Mounting points are 16" apart.
- Supports 600 pounds.
- Install into studs or blocking.

Bella, HPL

G56UHS12, N1

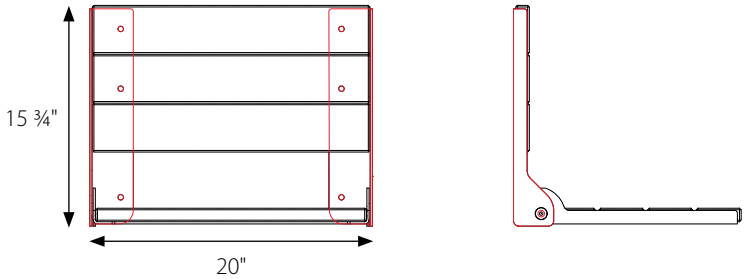

A – Strong and durable stainless steel frame, brushed finish.

B – Wood slats are 1" thick and made of finished African Okoume.

C – Frame has no finger pinch-points for safety.

- Mounting points are 16" apart.
- Supports 450 pounds.
- Install into studs or blocking.

PONTE GIULIO

Shower Seats and Benches

Freedom, Wood

G57UHS13

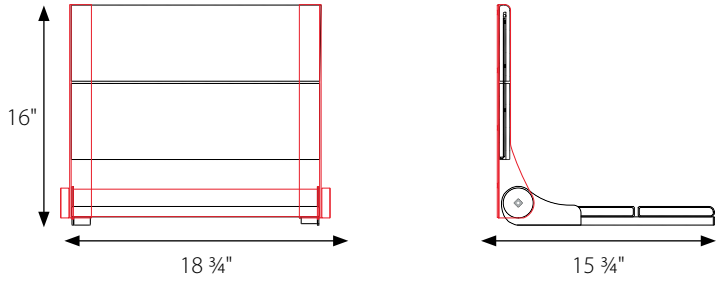

A – Strong and durable stainless steel frame.

B – Wood slats are made of Teak wood.

C – Frame has no finger pinch-points for safety.

- Mounting points are 16" apart.
- Supports 330 pounds.

HUG

G12JDSO5

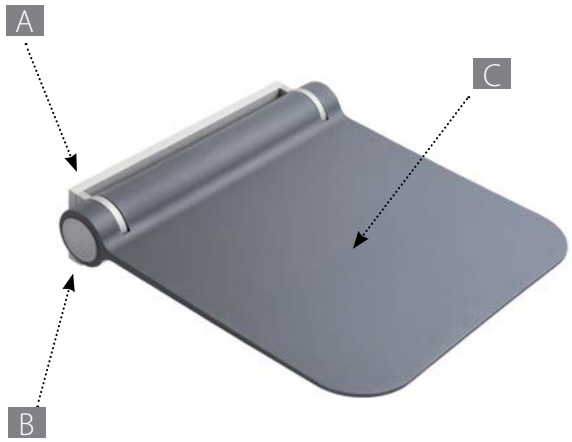

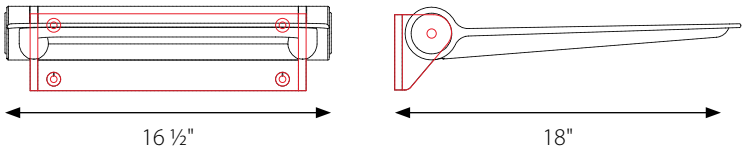

A – Stainless steel frame and mounting flange, 14" wide.

B – Tension system guarantees that seat stays firmly in any position.

C – Comfortable polyurethane seat –16 ½" wide, 18" deep.

- Mounting points are 11 ¾" apart.
- Supports 450 pounds.
- Choose this style if your wall has blocking.

PONTE GIULIO

Shower Seats

HUG

G12JDSO8 • Removable

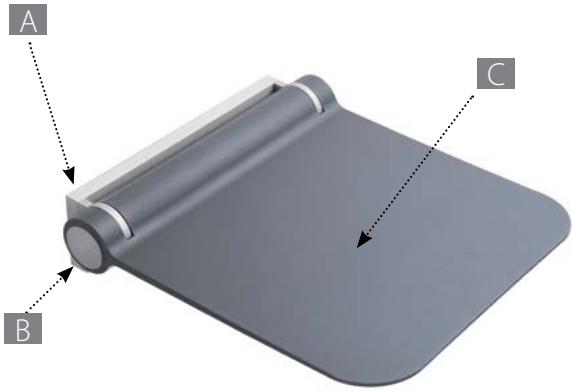

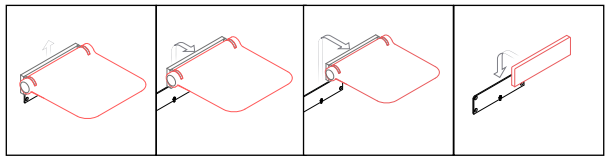

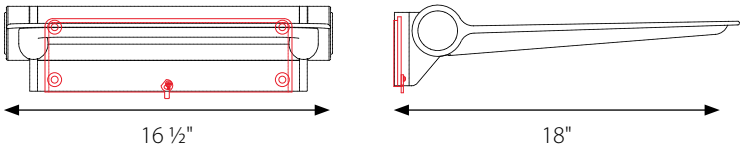

A – Stainless steel frame and mounting flange, 12 ½" wide.

B – Tension system guarantees that seat stay firmly in any position.

C – Comfortable polyurethane seat – 16 ½" wide, 18" deep.

- Choose this style if you want to move seat between multiple bathrooms or only use for a short time.
- Mounting points are 11 ⅝" apart.
- Install into blocking.

G12JDS10 • Extended Flange

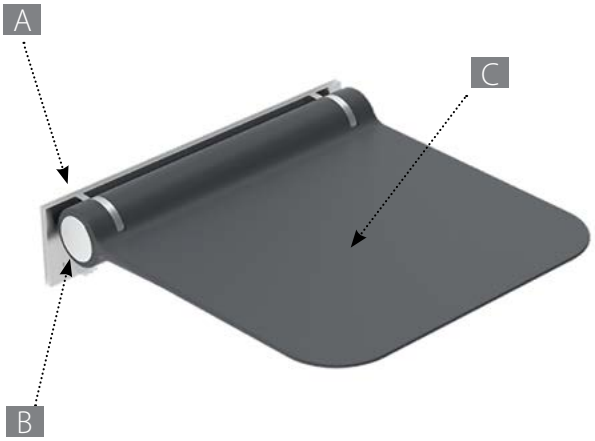

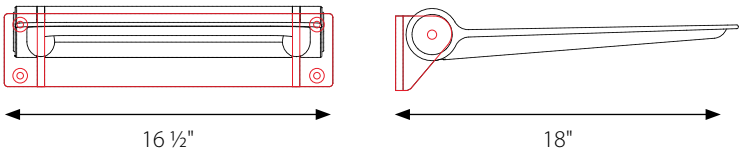

A – Stainless steel frame and mounting flange, 17 ¾" wide.

B – Tension system prevents seat from falling unexpectedly.

C – Comfortable polyurethane seat – 16 ½" wide, 18" deep.

- Supports 450 pounds.
- Mounting points are 16" apart.
- Choose this style if you are mounting into 16" on center studs.

PONTE GIULIO

Shower Seats

HPL

G25JDS21

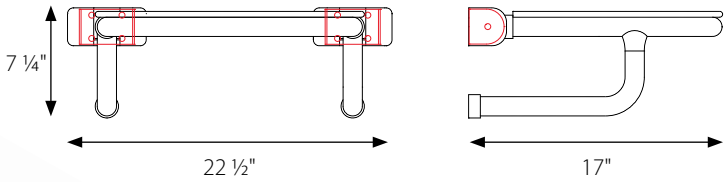

A – HPL seat – white color – with speckles.

B – Two support arms to provide greater load bearing capacity .

C – Mounting points are 17" apart – ideal for mounting into existing wall studs.

• Supports 330 pounds.

ABS Folding Seat

G27JDS43

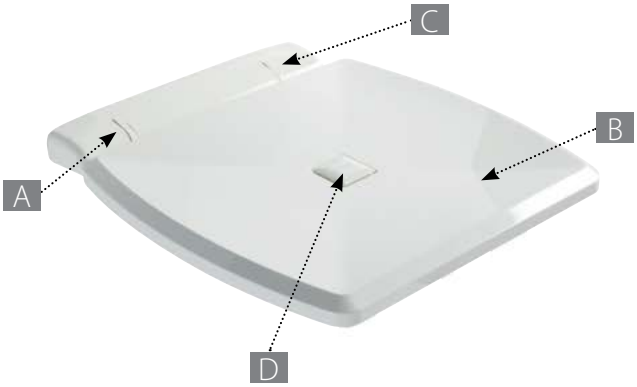

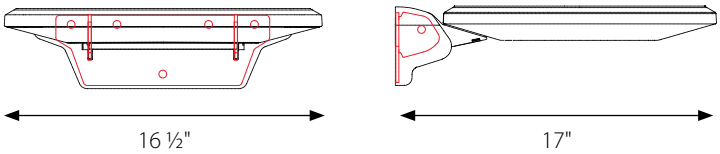

A – Hide tension system guarantee that seat stay firmly in any position.

B – ABS seat top with stainless steel core .

C – Stainless steel mounting flange at 9 ½".

D – Removable central cap for seat draining.

• Mounting points are 93½" so must be installed into blocking.

• Supports 450 pounds.

• Multiple color options.

PONTE GIULIO

Shower Seats and Benches

ADA

G02JDL29

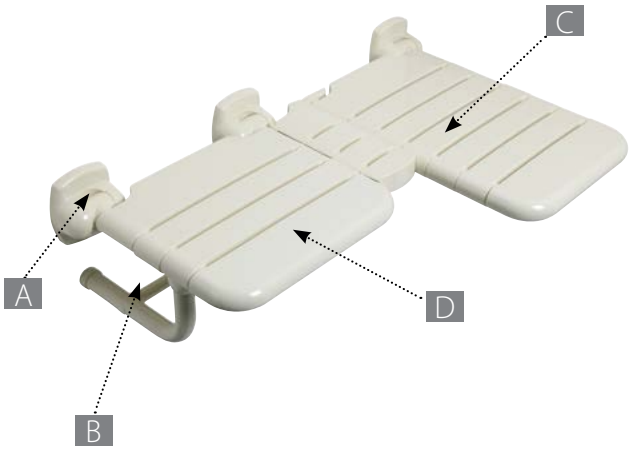

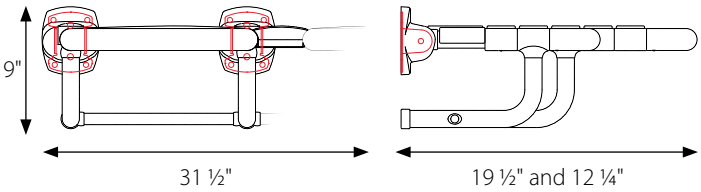

A – Stainless steel concealed mounting plates (3).

B – Equipped with support arms to provide greater load bearing capacity.

C – Nylon seat – very comfortable and provides anti-microbial protection.

D – ADA rated.

- Supports 450 pounds.
- Select left or right orientation.
- Install into blocking

Economic Folding S eat

G56UHS02

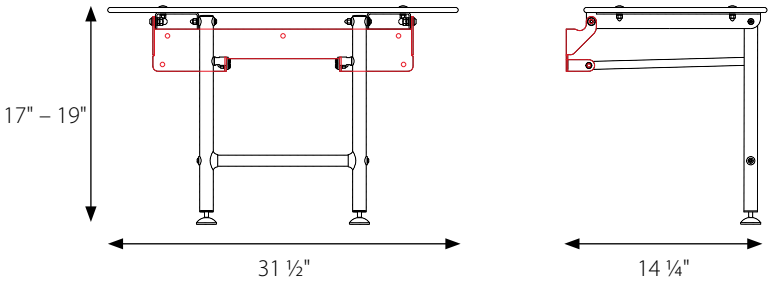

A – Seat is HPL with white speckles.
B – Tension system prevents seat from falling.
C – Stainless steel legs and frame for strength and durability, support of 75% of the load. Install in studs or blocking, a reinforced wall is not necessary.
D – Hinges have no finger-pinch points.
E – Legs adjust between 17" to 19"

- Exceeds ADA guidelines with 600-pound load capacity.
- Available in multiple sizes.
- Supports 600 pounds.
- Lifetime warranty and easy to install.

PONTE GIULIO

Shower Seats and Benches

Liberty, Teak

G57UHR31

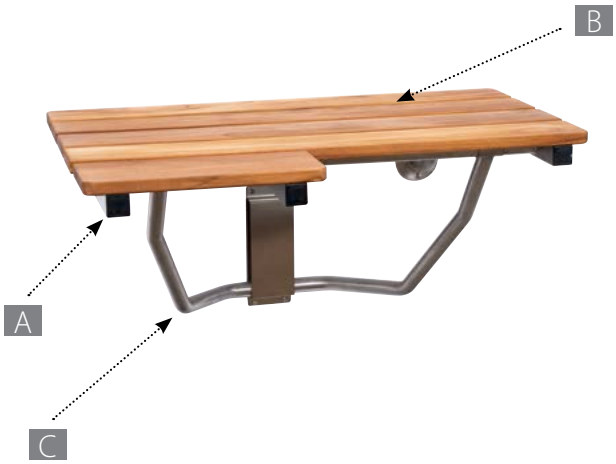

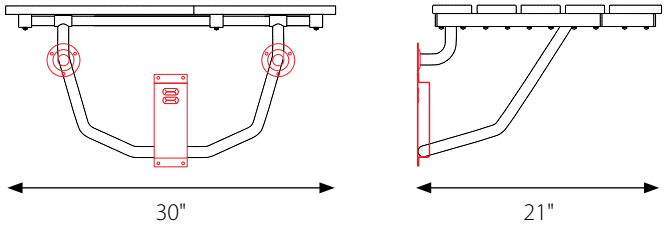

A – Strong and durable stainless steel frame.

B – Wood slats are made of teak wood.

C – Frame has no finger pinch-points for safety.

- Mounting points are 19 ½" apart.
- Supports 330 pounds.
- Available in right or left orientation and bench style.
- Install into blocking.

Folding Bathtub Bench, Nylon

G02JDS13 – 27" wide
G02JDS19 – 32" wide

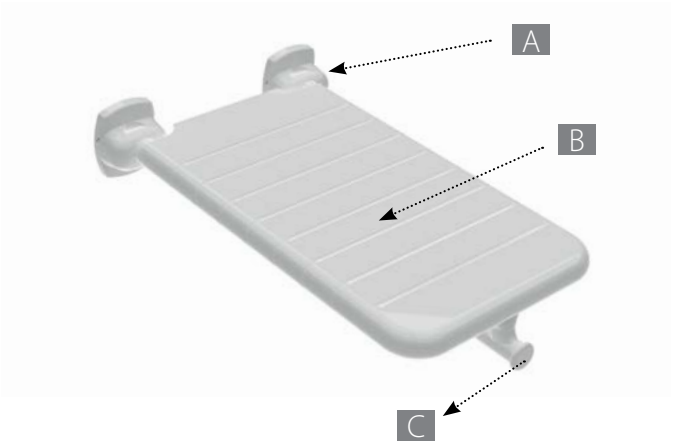

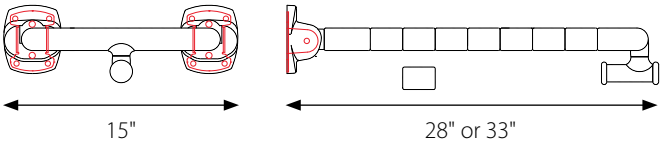

A – Stainless steel frame and flanges.

B – Anti-microbial nylon seat.

C – Front support foot, rests on the open side of the bathtub.

- Supports 450 pounds.
- Mount to wall and other side rests on the side of the bathtub.

Shower Seats and Benches

Folding Bathtub Bench, HPL

G25JDS18 – 27" wide
G25JDS19 – 32" wide

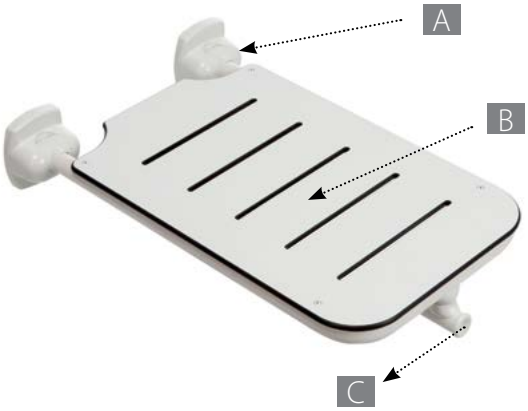

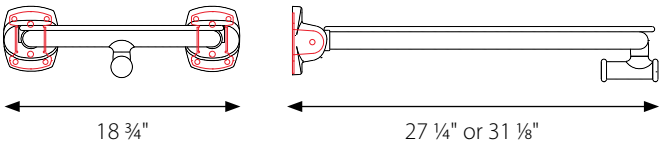

A – Stainless steel frame and flanges.

B – Seat made of HPL.

C – Front support foot, rests on the open side of the bathtub.

- Supports 450 pounds.
- Mount to wall and other side rests on the side of the bathtub.

PONTE GIULIO

Teak Shower Seat Care Instructions

CLEANING INSTRUCTIONS

Materials Needed

- Soft bristle brush or sponge
- Mild dish soap
- Warm water
- Bucket
- White vinegar
- Cloth or towel

Cleaning Steps

1. Use warm water to rinse off any loose dirt or debris from the teak shower seat.
2. In a bucket, mix a solution of mild dish soap and warm water. If you prefer, you can add a cup of white vinegar for extra cleaning power.
3. Dip a soft bristle brush or sponge into the cleaning solution. Apply it generously to the teak seat and gently scrub the surface of the teak. Always go with the grain of the wood to avoid scratching. Pay special attention to corners, crevices, and sides of teak slats.
4. After scrubbing, rinse the teak seat thoroughly with warm water to remove all soap residue. Then using a clean cloth or towel, dry the teak shower seat completely. This helps prevent water spots and keeps the wood from absorbing excess moisture.
5. Allow the teak seat to air dry completely before placing it back in the shower.

Regular Maintenance Tips

1. Towel dry the seat to remove water droplets and allow seat to air dry thoroughly.
2. Clean your teak shower seat regularly. Apply teak oil as needed usually every 2 to 4 months based on use.
3. If mildew should occur, you may use bleach to clean it. Using a dilution of 1/4 cup of bleach to 4 cups of water, scrub seat with a sponge, the solution should not sit on the seat for more than a few minutes. Rinse teak seat with clean water and dry with a towel.

TEAK OIL

Oil Maintenance

*Follow manufacturers recommendations**

Applying Teak Oil:

- After cleaning thoroughly pour a small amount of teak oil onto a soft cloth or wide bristle brush.
- Apply the oil evenly, following the grain of the wood, covering all surfaces, including edges and undersides.

Let It Absorb:

- Allow the teak oil to penetrate the wood for about 15-30 minutes.
- If the wood looks dry, apply a second coat.

Wipe Off Excess

- After the oil has absorbed, wipe off any excess with a clean cloth to avoid a sticky finish.

Drying Time:

- Allow the teak seat to dry completely before using it again, typically a few hours to overnight.
- Wipe up any oil spills or splashes, as they become more difficult to remove after it cures.

Why Use Teak Oil in Addition to Cleaning?

Teak wood is naturally water-resistant and durable, making it perfect for shower seats. Regular maintenance with teak oil will enhance its beauty and longevity. It is important to regularly clean and oil your seat to maintain color and appearance. Teak oil is made from natural ingredients like linseed and Tung oil and is generally considered non-toxic, making it safe for use around humans. When applied to teak wood, it penetrates the surface to enhance the wood's color and grain while providing protection against moisture and decay, all without emitting harmful chemicals. Although direct contact with the oil is not harmful, it's advisable to wash your hands after application to avoid any potential irritation, especially for those with sensitive skin.

PONTE GIULIO

Accessible Sinks

1. Ponte Giulio sinks are designed in Italy for functionality and style.
2. Manufactured of porcelain, acrylic stone (a generic name for Corian or LG Hi-Macs material) or mineral composite, all Ponte Giulio sinks are built to last.
3. Sinks provide accessibility with wall-mounting, elbow rest areas and ergonomic towel bars and hand pulls for any ADA or residential space.
4. Many sinks offer a concave front for seated users.

PONTE GIULIO

Accessible Sinks

Concave

These sinks with a concave front provide accessibility with wall-mounting, elbow rest area are more comfortable for seated users.

Sink Materials

Porcelain sinks are resistant to heat, scratches, impacts and chemical agents.

Acrylic Stone is the generic name for Corian or LG-HiMacs.

Mineral Composite is a synthetic material obtained by mixing a mineral, in granules of different sizes, with a polyester resin.

PONTE GIULIO

Installing a Wall Mounted Sink

1. Carefully remove the sink from packaging and locate the mounting holes at the back of the sink. Measure the distance between the mounting holes.
2. Locate the sink center on the wall where the sink will be installed. Measure and mark the mounting hole locations on the wall at the appropriate finished height.
   - ADA guidelines for **public buildings** recommend a maximum height of 34" with knee clearance of 27".
   - For a **residential** installation, finished height should be determined by the comfortable use placement for the homeowner. Install higher for a tall person or lower for a short person. Knee clearance should be sufficient so knees do not touch the bottom of sink or any pipes.

3. **Wall Preparation:** Remove the drywall behind the sink to allow for the installation of 2x 010 blocking between all the studs where the sink will be installed. Secure the blocking to the studs so it will hold the weight of the sink. Mounting holes at the back of the sink and any support brackets should go into studs or blocking.

4. Re-install the drywall and patch as needed. Paint the wall.
5. Install the faucet and drain assembly to the sink.
6. Apply silicone sealant across the back of the sink, then using bolts and washers that are appropriate for the wall material, secure the sink through the drywall into the blocking or studs.
7. Caulk the sink using silicone caulk between the sink and the wall. Apply the silicone sealant after any necessary painting because silicone won't accept paint.
8. Install two L-brackets under the sink and secure to the blocking or studs.
9. Make the final supply line and drain connections. Check for leaks.

PONTE GIULIO

Installing a Wall Mounted Sink

STEP 1

- Unpack and measure mounting holes on back of sink.

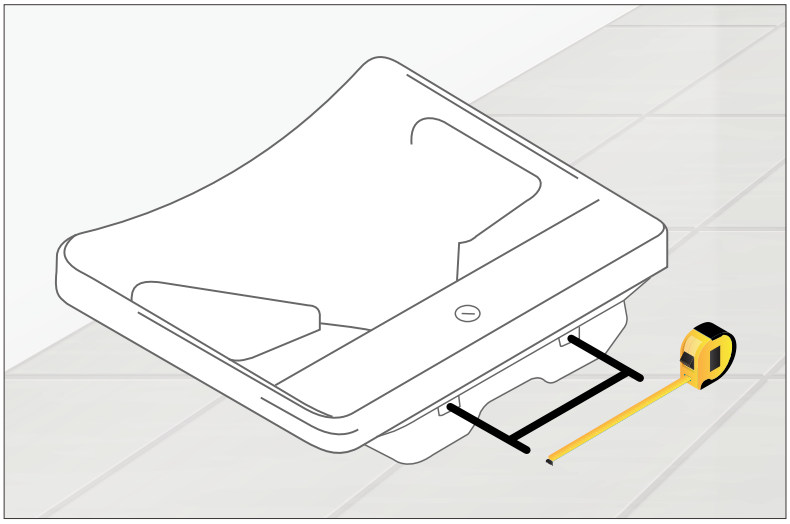

STEP 2

- Locate the sink center on wall. Measure and mark where the mounting holes will be and be sure sink is at correct height for homeowner.

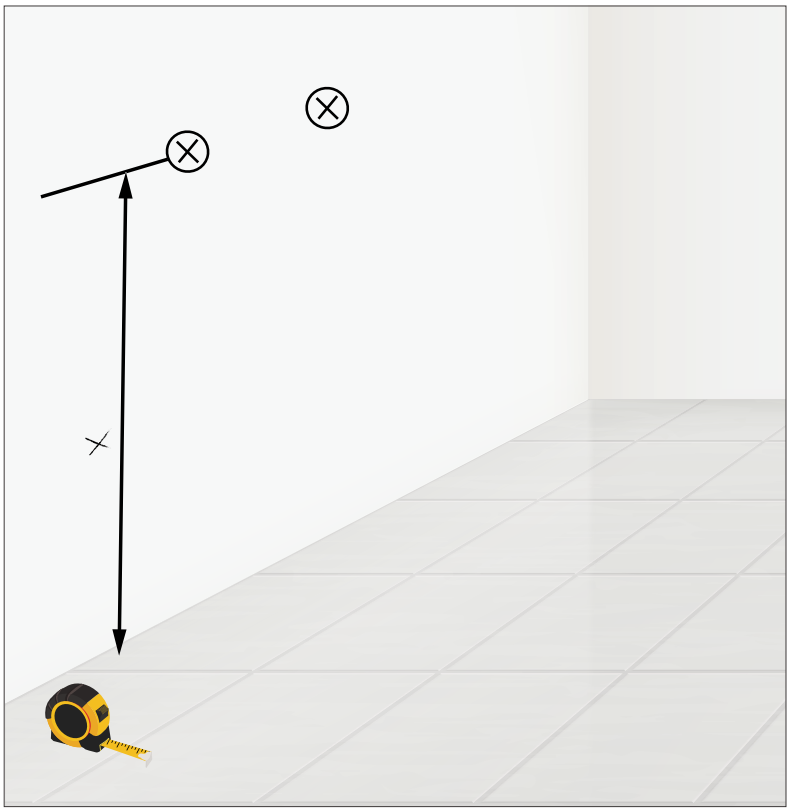

PONTE GIULIO

Installing a Wall Mounted Sink

STEP 3 – Wall Preparation

- Behind the drywall there will be STUDS, 1 ¾" wide and 16" apart.
- Do not remove an oversized section of drywall. Only remove what is needed for sink.

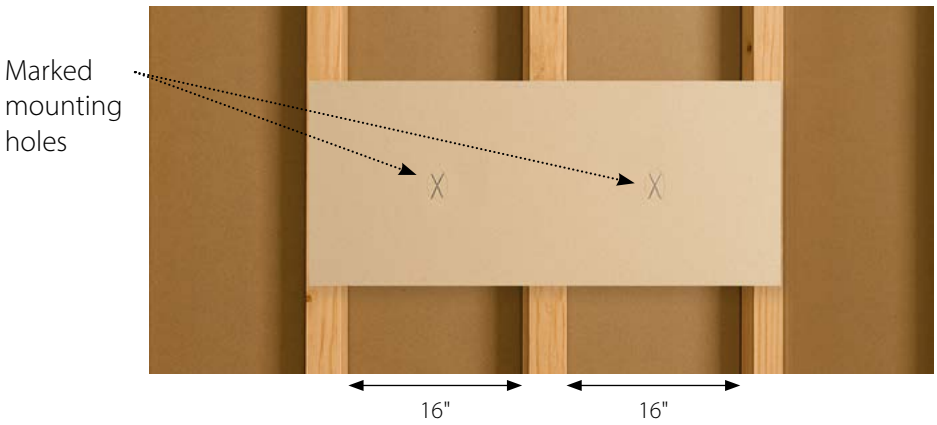

- Add blocking between studs and secure.
- Blocking is suggested. Use 2x12, 2x10 or 2x8.

STEP 4 – Replace Drywall

- Replace the drywall that was removed.
- Patch the wall.
- Paint the wall.

PONTE GIULIO

Install Faucet and Drain in Sink

STEP 5

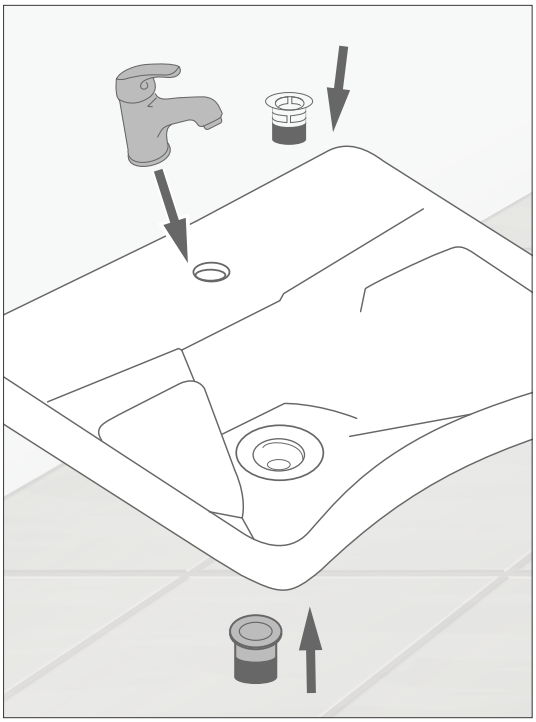

STEP 6

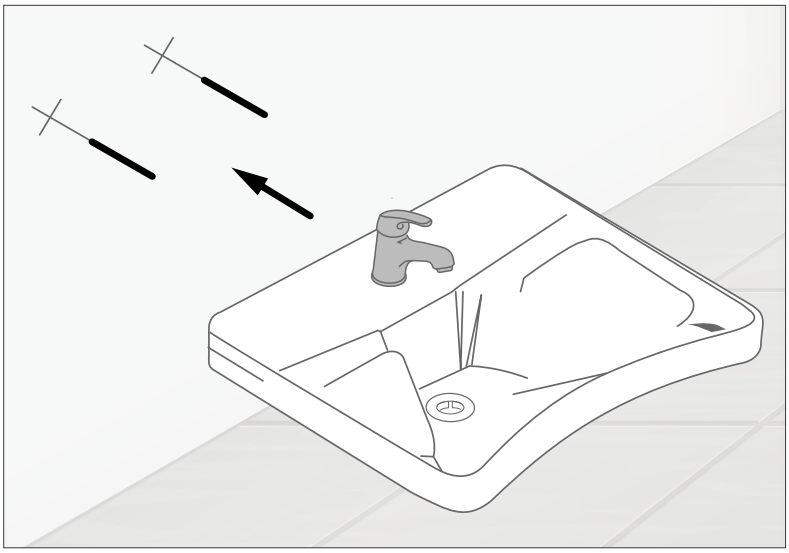

• Mark wall, drill wall, use the fasteners and attach sink to wall.

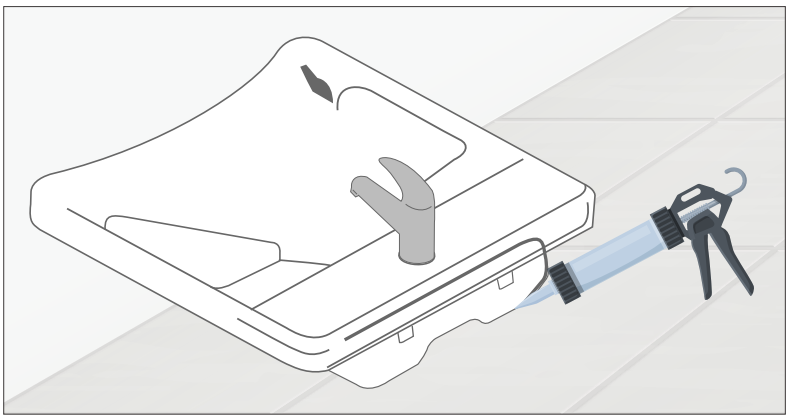

• Add silicone caulk just prior to mounting

PONTE GIULIO

Installing a Wall Mounted Sink

STEP 7

- Under the sink, attach fasteners to the wall and secure the sink.
- Apply silicone caulk to sink where it meets the wall to prevent water from getting behind sink.

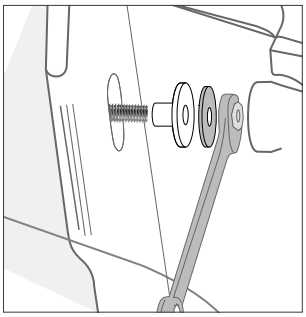

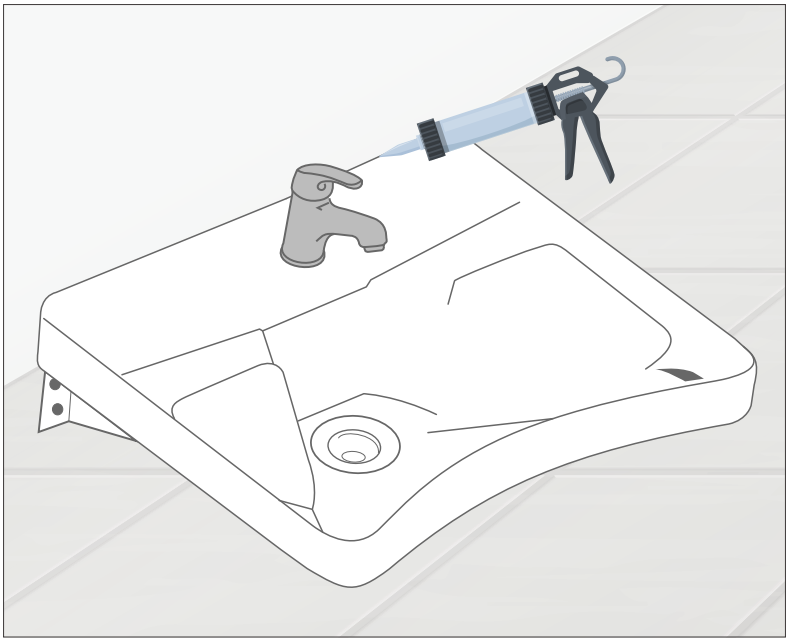

STEP 8

- Install two (2) L-Brackets under sink into blocking or studs.

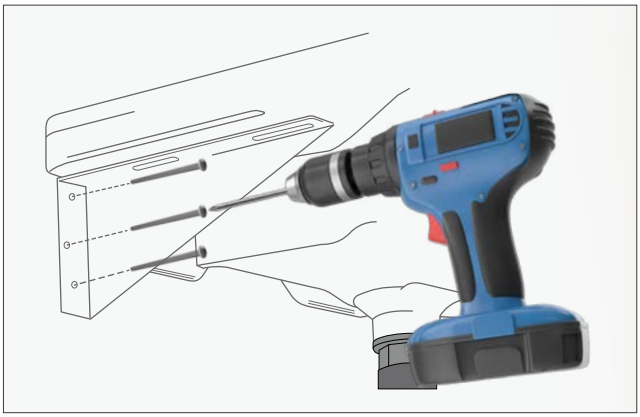

PONTE GIULIO

Installing a Wall Mounted Sink

STEP 9

- Connect supply line and drain.
- Check for leaks

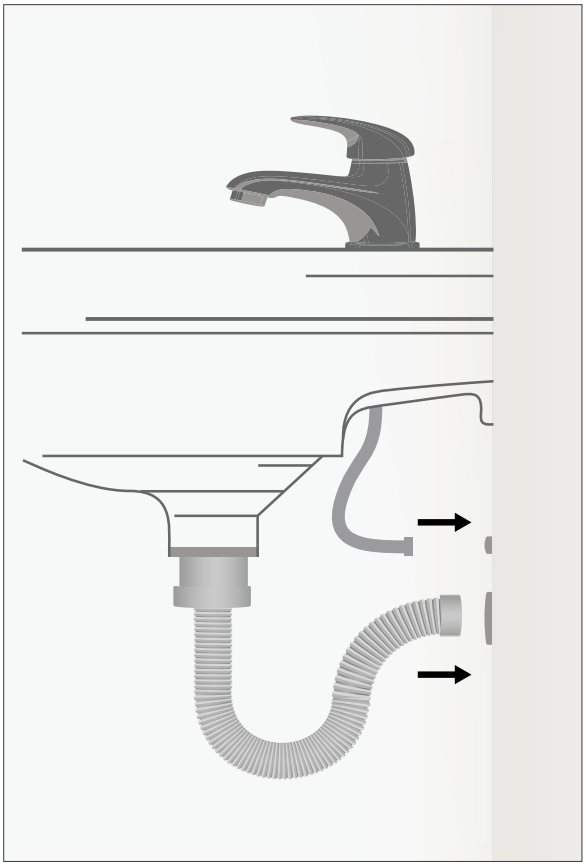

PONTE GIULIO

Shower Curtain Rods

- Our Shower curtain rods are available in both nylon coated and stainless steel.
- Custom sizes can be ordered from Italy to meet your specific shape and size requirements.

PONTE GIULIO

How to Order **Custom Shower Curtain Rods**

U-Shaped, L-Shaped and Straight Shower Curtain Rods in both Nylon and Stainless Steel are available in standard and CUSTOM sizes to fit your specific projects. Price is figured per inch and can be manufactured to fit your space exactly.

- Rods may also be cut to fit smaller spaces.
- Call for a project price quote today.
- Allow 8 to 12 weeks delivery from our manufacturing facility in Italy.

When you call, please provide measurements for length and width as well as the length of ceiling support you will need (distance between rod and ceiling).

Straight

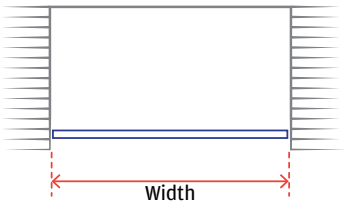

L-Shape

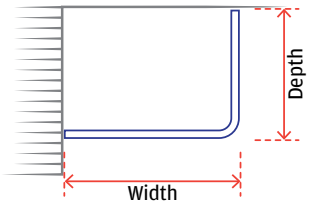

U-Shape

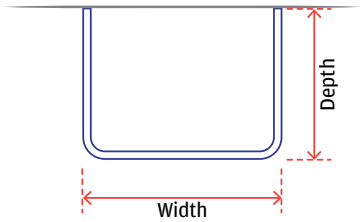

Height for Support Rods – used with L-shaped and U-shaped rods

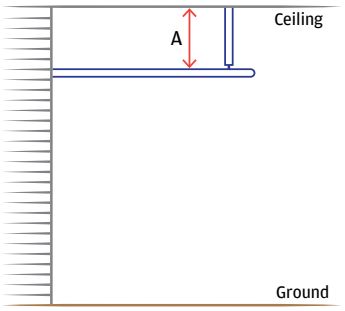

PONTE GIULIO

How to Contact the Ponte Giulio USA Office?

Ponte Giulio USA, Inc.
W241 S4021 Rockwood Circle
Waukesha, WI 53189

If you have additional questions, contact the Ponte Giulio USA team at **877-766-8301** or email **usa@pontegiuliousa.com**

Technical sheets for our products are available from our website at **www.PonteGiulio.com**

To view a technical sheet:

- Click on the magnifying glass in the upper right corner of the home page
- Enter the part number
- Scroll down to the product image and dimensions and on the right side of the image
- Select EXTENDED TECHNICAL SHEET.

The technical sheet will provide specific product dimensions. Many also show the mounting plate to assist with installations.
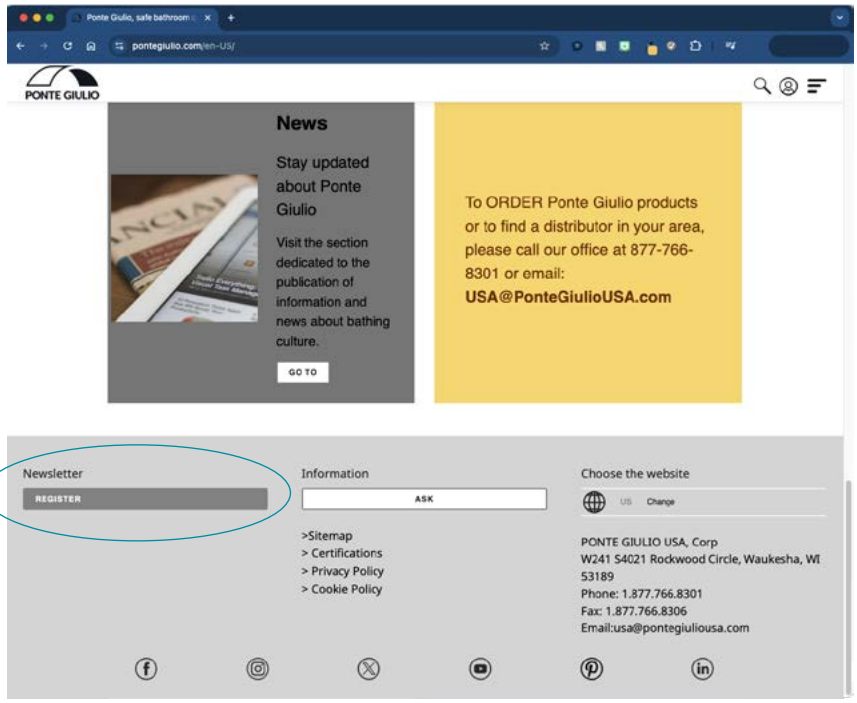
For best results when visiting our website, **register** on the home page for our newsletter. It will provide access to additional information.