2016 Precedent Illustrated Parts List

Gasoline Vehicle with Subaru EX40 Engine
Electric Vehicle with ERIC Charging System

Manual Number 105334601
Edition Code 0515C0616B

USING THE ILLUSTRATED PARTS LIST

⚠ WARNING

- **This manual is to be used only for identification and ordering of service parts. Be sure to read and use the maintenance and service manual before attempting any vehicle repairs.**

This manual covers all 2016 Club Car Precedent vehicles.

The manual is divided into sections. Note that there are two or three flags on the outside edge of each page. The first flag contains the section number of which that page is a part. The other flag (or flags) contains the letter D, E, or G, signifying that the page pertains to diesel, electric, or gasoline vehicles.

Use the Table of Contents to find the sections and pages that contain the parts and assemblies you seek. The Table of Contents lists section numbers, and under them, the individual page titles and numbers to be found in that section. The index can be used to find specific parts and assemblies. The index is divided into numerical and alphabetical listings with the page numbers in italic text.

There is a two-page spread for each individual page title in the Table of Contents. On the left-hand page is an illustration showing the parts in their relative positions; the parts are each tagged with an item number in a balloon. The right-hand page is the parts list page, and gives the page title at the top, then the item numbers (corresponding to the numbers on the illustration), part descriptions, and quantity of parts used. Some item numbers have more than one part number because several configurations of a component are represented together on one spread.

Note that a part description may be indented. This indention corresponds to a parts assembly level indicated by the numbers 1, 2, 3, and 4 at the top left corner of the parts description area of the parts list page. A part that is indented to *level 2* is a component of the *level 1* part (assembly) that it is listed under. A *level 3* part is a component of the *level 2* part that it is listed under, and a *level 4* part is a component of the *level 3* part preceding it. In each case, the part quantity given for a level 2, 3, or 4 part *is the quantity used per next higher level assembly of which it is a component.* A part that is not indented is a *level 1* part. This means that the quantity given is the quantity used per the portion of the vehicle illustrated on that particular spread.

P. O. Box 204658
Augusta, Georgia 30917-4658 USA
Telephone 706-863-3000
Service Parts Fax 706-855-7413
www.clubcar.com

HOW TO ORDER PARTS

Replacement parts and accessories can be obtained from our network of authorized dealers and distributors. You can obtain the name and phone number of your closest authorized Club Car dealer or distributor by visiting our web site at www.clubcardealer.com, by calling our toll-free Service Parts and Technical Assistance hotline at (800) 872-2246 or (706) 863-3000, extension 3887, or by scanning this Quick Response (QR) code to be taken to the Club Car dealer locator. **Refer to Figure 1.** Download a QR code reader such as RedLaser or Barcode Scanner to your cell phone or tablet.

Figure 1 Dealer Locator QR Code

CUSTOMER SATISFACTION SURVEY

Let your voice be heard!

Please take time to participate in the Technical Publications satisfaction survey. Obtaining feedback from our customers is important to the department's continuous improvement process. The online survey takes less than five minutes and responses will help the department to examine current performance as well as identify areas for future improvement.

Our top priority is to provide timely, accurate, and user friendly manuals.

The online satisfaction survey can be found at: http://bit.ly/1w9uFMh

Figure 2 Survey QR Code

NOTE: *This illustrated parts list represents the most current information at the time of publication. Club Car, LLC is continually working to further improve its vehicles and other products. These improvements may affect the parts used to service the vehicle. Any modification and/or significant change in specifications will be forwarded to all Club Car and Carryall distributors/dealers and will, when applicable, appear in future editions of this illustrated parts list.*

Club Car, LLC reserves the right to change specifications and designs at any time without notice and without the obligation of making changes to units previously sold.

Copyright © 2015 Club Car, LLC
Club Car, *Precedent,* and *Surlyn*
are registered trademarks of Club Car, LLC
This manual effective July 7, 2015.

CONTENTS

SECTION 1 – BODY AND TRIM

Frame 1-3
Front Bumper 1-5
Front Body 1-7
Underbody Covers (Vehicle Without Canopy) 1-9
Dash 1-11
Floor Mat, Retainers, and Front Underbody 1-13
Kick Plate – Subaru EX40 Gas Vehicle 1-15
Kick Plate – Electric Vehicle 1-17
Seat Bottom with Hip Restraints 1-19
Backrest and Structural Accessory Module (SAM) 1-21
Rear Body 1-23
Club and Ball Cleaner Kit 1-25
Sand Bottle Kits 1-27
Sand Bucket Kits 1-29
Canopy – White 1-31
Canopy – Beige 1-33
Canopy – Black 1-35
Canopy Struts 1-37
Visage Canopy Struts and Console 1-39
Four-Passenger Monsoon Canopy 1-41
Four-Passenger Monsoon Canopy Struts 1-43
Rear Seat – Precedent Villager 4 1-45
Rear Footrest Assembly, Precedent Villager 4 1-47
Four Passenger Conversion Kit, Monsoon – Beige 1-49
Four Passenger Conversion Kit, Monsoon – White 1-51
Four Passenger Conversion Kit, Monsoon – Gray 1-53

SECTION 2 – WHEELS AND TIRES

Wheels and Tires, i2 and Signature 2-3
Wheels and Tires – i2L and i2L2 2-5

SECTION 3 – DECALS

Decals – Subaru EX40 Gas Vehicle, Page 1 of 3 3-3
Decals – Subaru EX40 Gas Vehicle, Page 2 of 3 3-5
Decals – Subaru EX40 Gas Vehicle, Page 3 of 3 3-7
Decals – Electric Vehicle, Page 1 of 2 3-9
Decals – Electric Vehicle, Page 2 of 2 3-11

CONTENTS

Decal – Precedent Villager 4 3-13

SECTION 4 – LIGHTS, CONTROLS AND INDICATORS

Headlights Only – Precedent 4-3
Headlights Only (CE) – Precedent 4-5
Headlights, Horn and Taillights – Precedent 4-7
Headlights, Horn and Taillights (CE) – Precedent 4-9
Instrument Panel – Electric Vehicle with ERIC Charger 4-11
Instrument Panel – Kaw. FE350 Gas Vehicle 4-13
Instrument Panel – Subaru EX40 Gas Vehicle 4-15
DC Converter (Standard) – Electric Vehicle 4-17
DC Converter (CE) – Electric Vehicle 4-19

SECTION 5 – BRAKES AND PEDAL GROUP ASSEMBLIES

Rear Brakes, Self-Adjusting – Electric Vehicles 5-3
Rear Brakes, Self-Adjusting – Gasoline Vehicles 5-5
Brake Cables and Equalizer Bracket 5-7
Pedal Group with Sensor – Gasoline Vehicle 5-9
Pedal Group w/o Sensor, Gasoline Vehicle 5-11
Pedal Group w/o MCOR – Electric Vehicle 5-13
Pedal Group with MCOR – Electric Vehicle 5-15

SECTION 6 – STEERING, FRONT AND REAR SUSPENSION

Steering Wheel, Comfort Grip 6-3
Steering Wheel 6-5
Steering Column 6-7
Steering Gear Assembly 6-9
Front Suspension, Upper 6-11
Front Suspension, Lower 6-13
Rear Suspension, Gasoline Vehicle 6-15
Rear Suspension, Electric Vehicle 6-17
Rear Suspension, Precedent Villager 4 6-19

SECTION 7 – ELECTRICAL SYSTEM – SUBARU EX40

Accelerator Pedal Assembly w/Sensor – EFI 7-3
Wiring, Fuses and ECU – EFI with Side-Post Battery 7-5
Wiring, Fuses and ECU – EFI with Top-Post Battery 7-7
STARTER/GENERATOR (MODEL 114-05-4001), PEDAL-START – EFI 7-9

Starter/Generator Mounting, EX40 – To Early-2016 Model Year 7-11
Starter/Generator Mounting, EX40 – From Early-2016 Model Year 7-13
Side-Post Battery, Solenoid, Voltage Regulator – EFI 7-15
Kit, Battery Terminal Adapter (Side-Post to Top-Post) – EFI 7-17
Top-Post Battery, Solenoid, Voltage Regulator – EFI 7-19
Operation and Maintenance Switch 7-21
Forward/Reverse Shifter Switches – EFI 7-23

SECTION 8 – ENGINE – SUBARU EX40

Tune-Up Parts – Subaru EX40 8-3
Engine and Engine Mounting, Precedent – To Early-2016 Model Year 8-5
Engine and Engine Mounting, Precedent – From Early-2016 Model Year 8-7
Fan and Shroud – EX40 8-9
Air Deflector – EX40 8-11
Ignition Components and Flywheel – EX40 8-13
Sensors – EX40 8-15
Cylinder Head – EX40 8-17
Valvetrain and Timing Chain – EX40 8-19
Crankcase – EX40 8-21
Crankshaft and Piston – EX40 8-23

SECTION 9 – FUEL SYSTEM, EFI – SUBARU EX40

Fuel System w/o Sending Unit – EFI 9-3
Fuel System with Sending Unit – EFI 9-5
Fuel Tank Kits – EFI 9-7
Carbon Canister – EFI 9-9
Throttle Body and ECU – EFI 9-11
Throttle Body Mounting – EFI 9-13
Governor and Accelerator Cables – EFI 9-15
Air Filter System and Intake Hose – EFI 9-17

SECTION 10 – EXHAUST SYSTEM, GOLF – SUBARU EX40

Exhaust System, Golf – Subaru EX40 10-3

SECTION 11 – DRIVE BELT AND CLUTCHES – SUBARU EX40

Drive Belt – Pedal-Start Vehicles with EFI 11-3
Drive Clutch – Pedal-Start Vehicles with EFI 11-5
Driven Clutch – All Gasoline Vehicles with EFI 11-7

CONTENTS

SECTION 12 – TRANSAXLE, FUJI ED65 (FOR SUBARU EX40)

Forward/Reverse Shifter Assembly – EFI 12-3
Shifter Cable – CA100, XRT800, Precedent 12-5
Shift Lever and Bracket – Pedal-Start Engines 12-7
Governor Arm and Brackets – Precedent 12-9
Transaxle (ED65), Open – Page 1 of 3 12-11
Transaxle (ED65), Limited Slip and Open – Page 2 of 3 12-13
Transaxle (ED65), Open – Page 3 of 3 12-15
Hub, Rear 12-17

SECTION 13 – ELECTRICAL SYSTEM – EXCEL WITH HIGH FREQUENCY CHARGERS

Motor Controller Output Regulator (MCOR) 13-3
Wiring and Fuses 13-5
Forward/Reverse Switch and Tow/Run Switch 13-7
Batteries and Battery Bucket, PD+ 8-Volt 13-9
Batteries and Battery Bucket, PD+ 8-Volt, CE 13-11
Single Point Watering System, 8V 13-13
Hand Pump and Deionizer (Battery-Powered Quality Light) 13-15
Controller and Solenoid 13-17
Ferrite Beads, CE 13-19

SECTION 14 – ELECTRIC MOTOR

Motor (Model EJ8-4001A) – Electric Vehicle 14-3

SECTION 15 – TRANSAXLE – ELECTRIC VEHICLES

Transaxle – Electric Vehicles 15-3

SECTION 16 – BATTERY CHARGERS – HIGH-FREQUENCY

Battery Charger, High-Frequency – U.S./Canada 16-3
Battery Charger, High-Freq., 2.74 m DC Cord – Global 16-5
Battery Charger, High-Freq., 3.66 m DC Cord – Global 16-7
Battery Charger, High-Freq., 6.1 m DC Cord – Global 16-9
Cords – Battery Charger, High-Frequency 16-11
Battery Charger, High-Frequency – Onboard 16-13
Battery Charger, High-Frequency – Onboard (for Rear-Facing-Seat) 16-15

CONTENTS

SECTION 17 – MAINTENANCE AND SERVICE TOOLS

Maintenance and Service Tools 17-3
Maintenance and Service Tools, Continued 17-5
Maintenance and Service Tools, Continued 17-7

SECTION i – INDEX

BODY AND TRIM

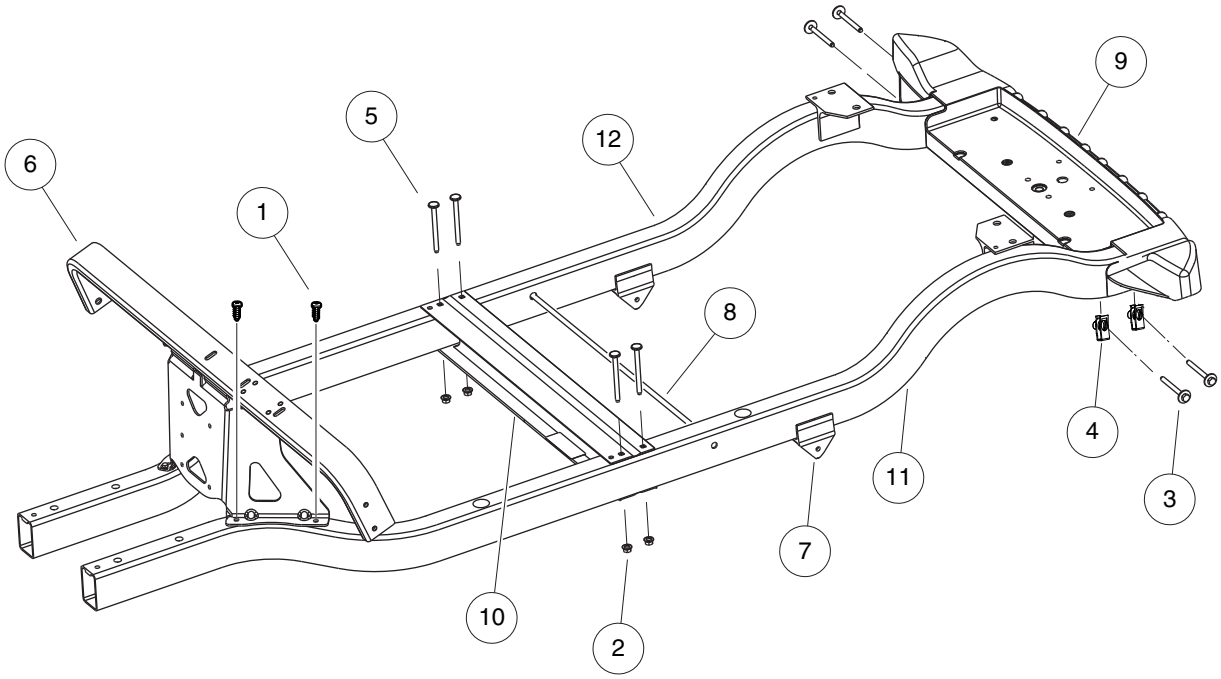

000436-009

ITEM	PART NO.	DESCRIPTION	QTY
		1 2 3 4	
1	102292101	Screw-5/16 X 1.5 Tek	4
2	102298401	Nut,m8,all Metal Lock	4
3	102298580	M8-1.25 X 80 Sems	4
4	102298601	J-clip - M8 X 1.25	4
5	102298995	Bolt, Wafer Head, M8-1.25x95	4
6	102505701	Assembly, Dash Support	1
7	102507801	Hanger, Spring	2
8	103638901	Rod, .5 Od X 26.26	1
9	103926601	Crossmember, rear	1
10	103975901	I Beam, Cross Car	1
11	103990501	Weldment, Frame, Prec, Lh	1
12	103990601	Weldment, Frame, Prec, Rh	1

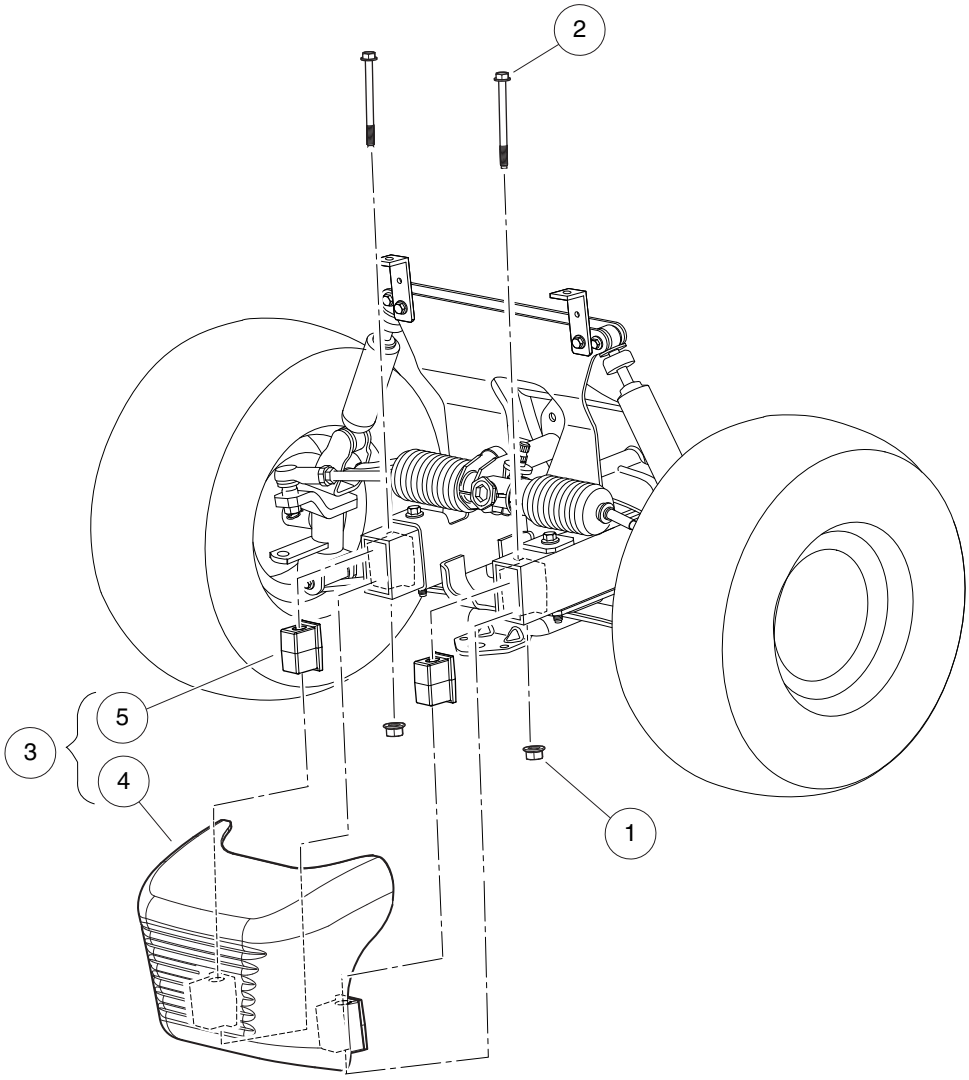

000437-003

FRONT BUMPER

ITEM	PART NO.	DESCRIPTION	QTY
		1 2 3 4	
1	102298401	Nut,m8,all Metal Lock	2
2	102534201	Bolt - Fl Hd, M8 X 95	2
3	103330601	Asm, Bumper, Front, Precedent (includes items 4 and 5)	1
4	N/A	Bumper, Front, Precedent	1
5	103325001	Plug, Shock, Precedent Bumper	2

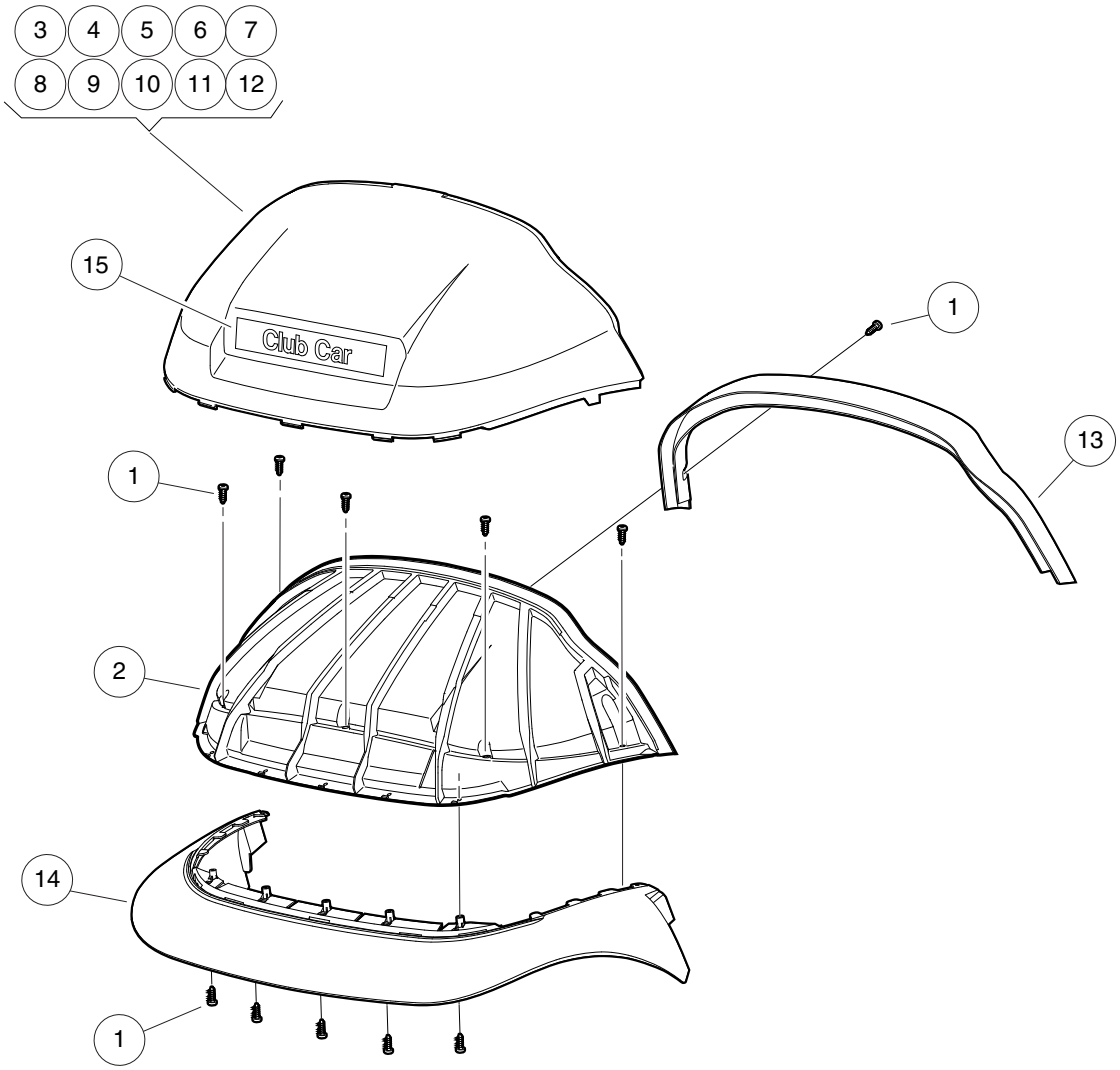

000434-005

ITEM	PART NO.	DESCRIPTION	QTY
		1 2 3 4	
1	102296020	Screw, Torx Pan Hd Pt, M6 X 20	14
2	102501501	Brow	1
3	102502401	Panel, Beauty Front, White	1
4	102502402	Panel, Beauty Front, Beige	1
5	102502404	Panel, Beauty Front, Gray	1
6	102502405	Panel, Beauty Front, Red	1
7	102502406	Panel, Beauty Front, Burgundy	1
8	102502407	Panel, Beauty Front, Green	1
9	102502408	Panel, Beauty Front, Blue	1
10	102502409	Panel, Beauty Front, Black	1
11	102502411	Panel, Beauty, Front, Cayenne	1
12	102502413	Panel-beauty Front, Atlantic	1
13	102502501	Brow Cap	1
14	102534404	Fascia, Blk	1
15	103816601	Nameplate -cc	1

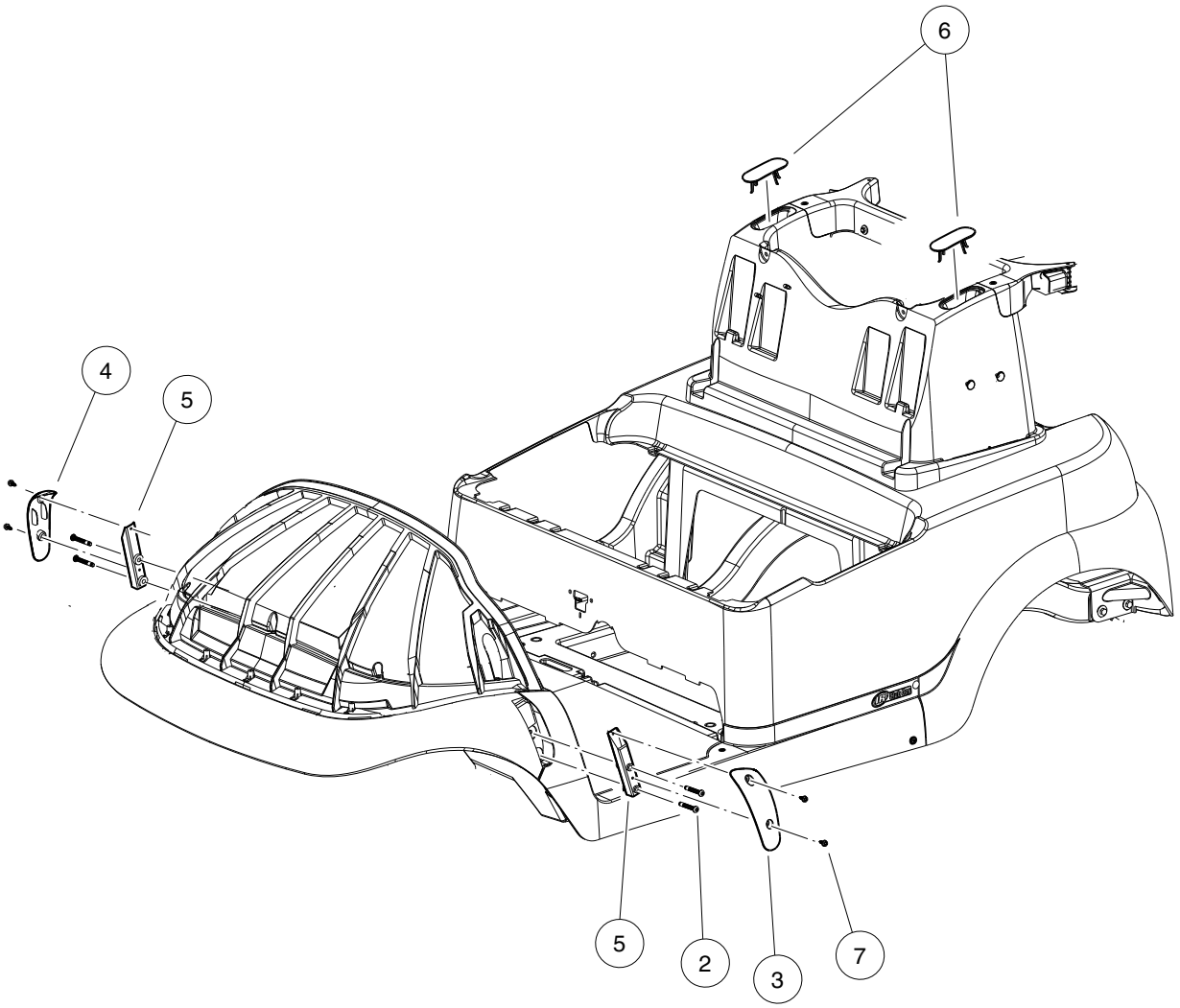

000730-003

UNDERBODY COVERS (VEHICLE WITHOUT CANOPY)

ITEM	PART NO.	DESCRIPTION	QTY
		1 2 3 4	
1	102543902	Kit, Underbody Cover, Black (includes items 2 through 7)	1
2	102299065	M8-1.25 X 65 Tx Bttn Hd Bolt	4
3	102400202	Cover, Lh Non-canopy, Blk	1
4	102400302	Cover, Rh Non-canopy, Blk	1
5	N/A	Support, Strut Cover	2
6	N/A	SAM Cap	2
7	102544201	Screw, M6 Hex	4

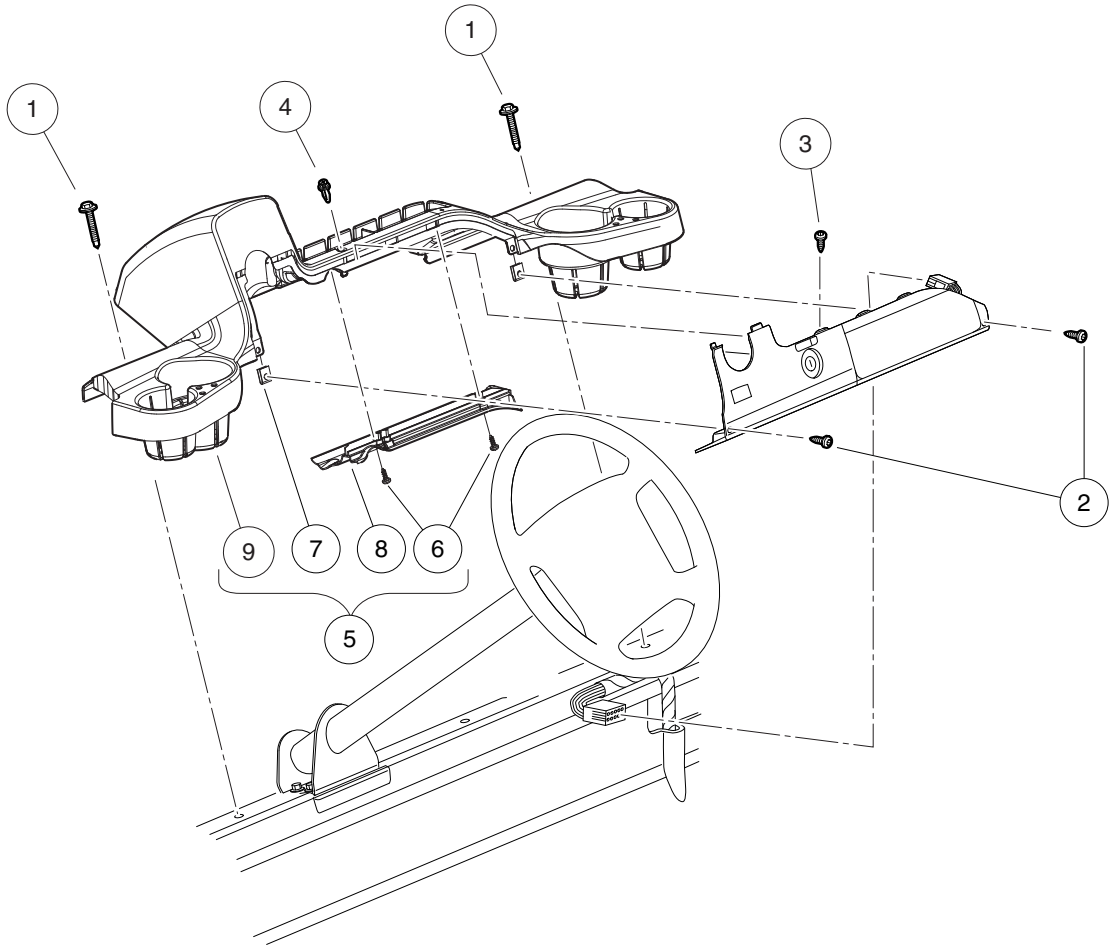

000438-003

ITEM	PART NO.	DESCRIPTION	QTY
		1 2 3 4	
1	102292356	Screw-1/4-20x56 Hwh Self Drill	2
2	102296819	Screw-M6 x 19	2
3	102557201	Screw, #6-20 Type Abx1.oo Pan	1
4	102915601	Plastic Rivet - Tuflock	1
5	103402701	Dash Assembly, Prec (includes items 6 through 9)	1
6	N/A	Screw-torx Pan Hd Pt,m6 X 16	2
7	102297001	U-nut, 1/4" Type Ab	2
8	N/A	Drain Channel - Dash	1
9	N/A	Dash, Prec	1

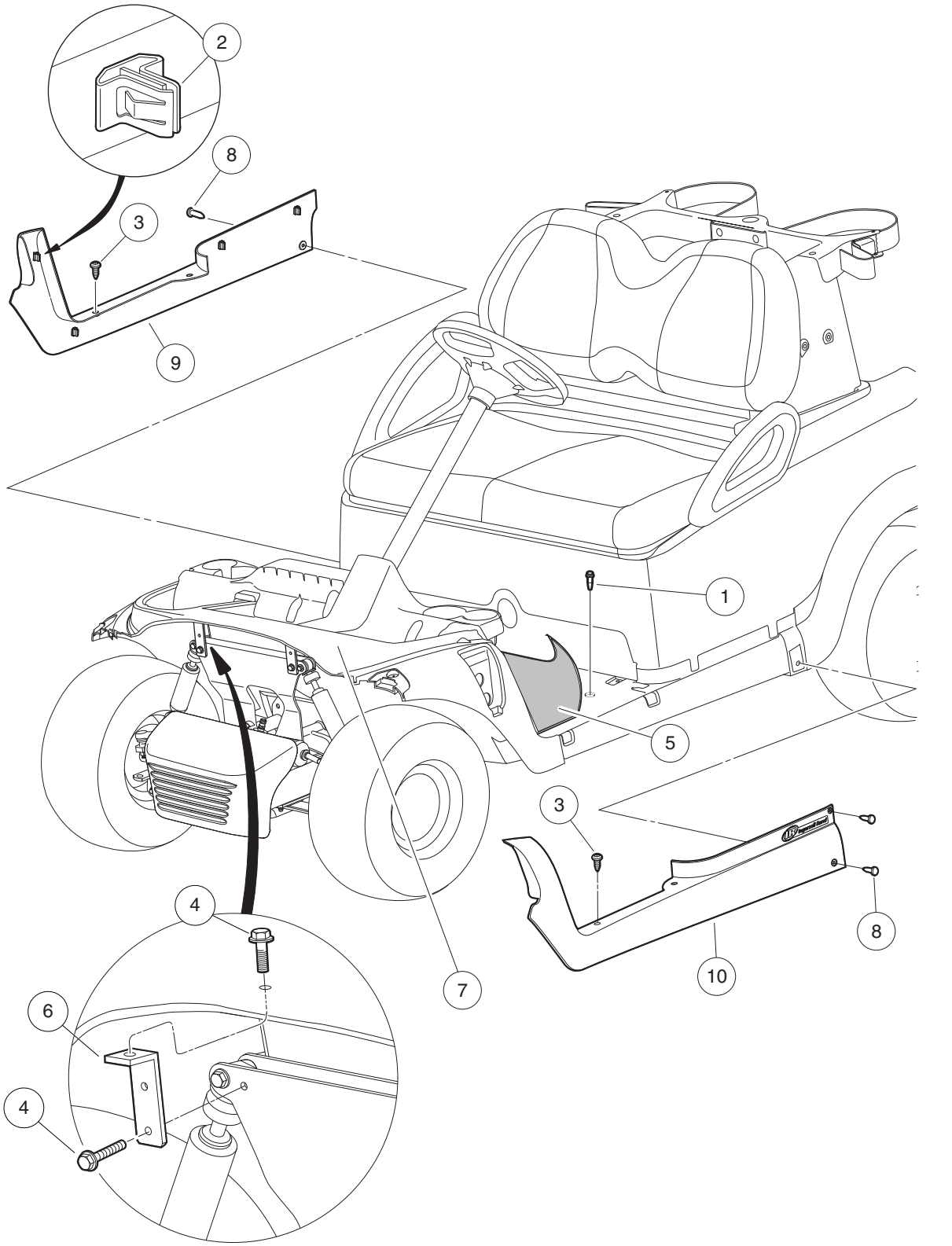

000497-007

FLOOR MAT, RETAINERS, AND FRONT UNDERBODY

ITEM	PART NO.	DESCRIPTION	QTY
		1 2 3 4	
1	102292356	Screw-1/4-20x56 Hwh Self Drill	3
2	102292701	Clip-body-trim	8
3	102298020	Screw, K80x20, Torx Pn Hd Pt	4
4	102298716	M8-1.25x16 Taptite	4
5	102504802	Floormat, Precedent	1
6	102521901	Bracket-clamshell	2
7	103635201	Underbody, Front, One Piece	1
8	105291501	Rivet, Plastic Tuflok, 8mm	4
9	105314001	Floormat Ret Asm, Prec, Rh Blk	1
10	105314101	Floormat Ret Asm, Prec, Lh Blk	1

Note: Item 7 is a special order item available upon request.

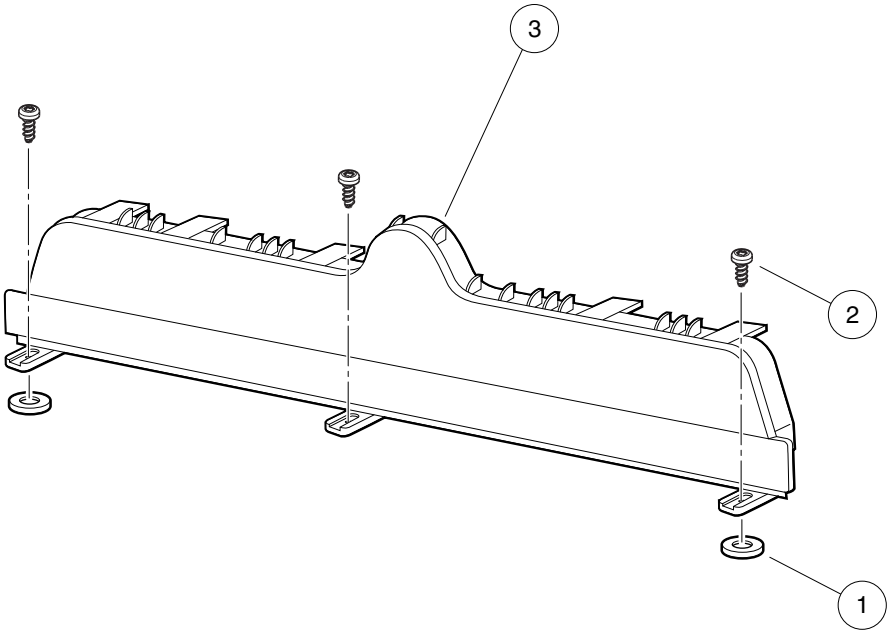

001059-001

KICK PLATE – SUBARU EX40 GAS VEHICLE

ITEM	PART NO.	DESCRIPTION	QTY
		1 2 3 4	
1	1012571	Washer, 5/16 Extra Thick Flat	2
2	102298020	Screw, K80x20, Torx Pn Hd Pt	3
3	105005402	Plate, Kick, Black, Gas EFI	1

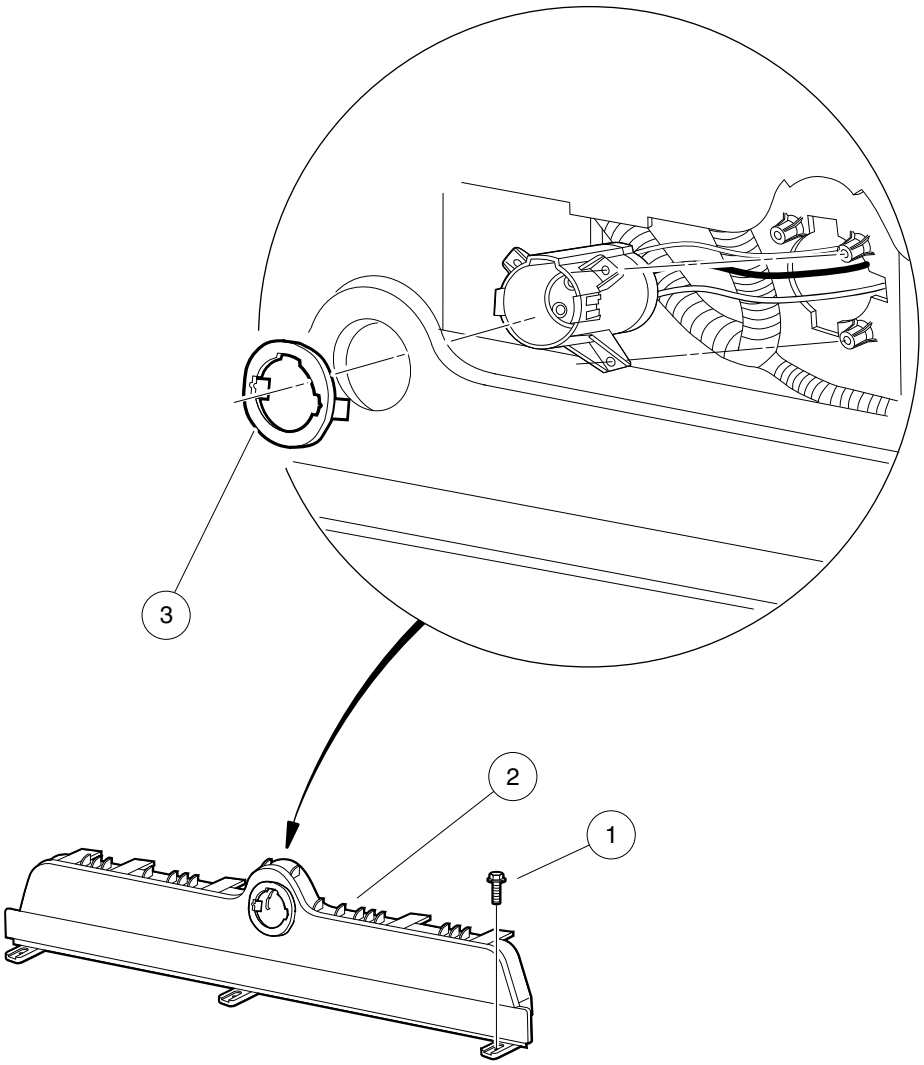

000500-003

KICK PLATE – ELECTRIC VEHICLE

ITEM	PART NO.	DESCRIPTION	QTY
		1 2 3 4	
1	102298030	Screw, K80x30, Torx Pn Hd Pt	3
2	102508202	Plate - Electric Kick Blk	1
3	102516901	Socket Trim	1

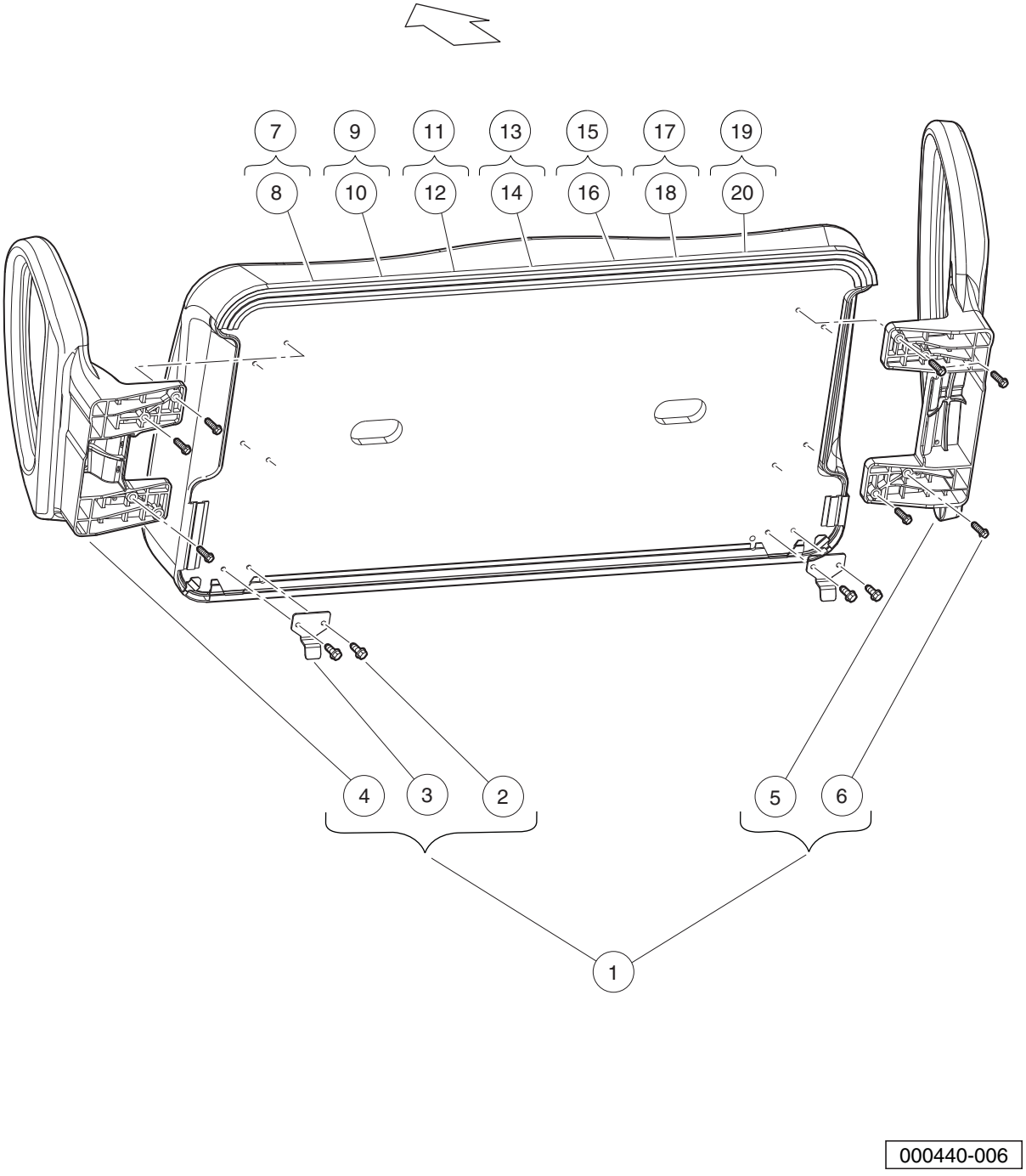
7
9
11
13
15
17
19
8
10
12
14
16
18
20
4
3
2
5
6
1
000440-006

SEAT BOTTOM WITH HIP RESTRAINTS

ITEM	PART NO.	DESCRIPTION	QTY
		1 2 3 4	
1	103833901	Kit, Prec, Seat Botm (includes items 2 through 6)	1
2	101954301	Screw, 1/4-20 X 0.75 Hex-Head Cap	4
3	103832901	Hinge, Seat Bottom	2
4	103833601	Hip Restraint, Drv	1
5	103833701	Hip Restraint, Pas	1
6	103833801	1/4-20 X 1.5 Hex Flg Patch	8
7	104023421	Service, Asm, Beige, Seat Btm (includes item 8)	1
8	101998501	Gasket, Seat	1
9	104023422	Service, Asm, White, Seat Btm (includes item 10)	1
10	101998501	Gasket, Seat	1
11	104023424	Service, Asm, Gray, Seat Btm (includes item 12)	1
12	101998501	Gasket, Seat	1
13	104023425	Service, Asm, Black, Seat Btm (includes item 14)	1
14	101998501	Gasket, Seat	1
15	105223321	Sp,asm,prem Seat Botm,lt Beige (includes item 16)	1
16	101998501	Gasket, Seat	1
17	105223322	Sp,asm,prem Seat Botm,camello (includes item 18)	1
18	101998501	Gasket, Seat	1
19	105223323	Sp,asm,prem Seat Botm,off Wht (includes item 20)	1
20	101998501	Gasket, Seat	1

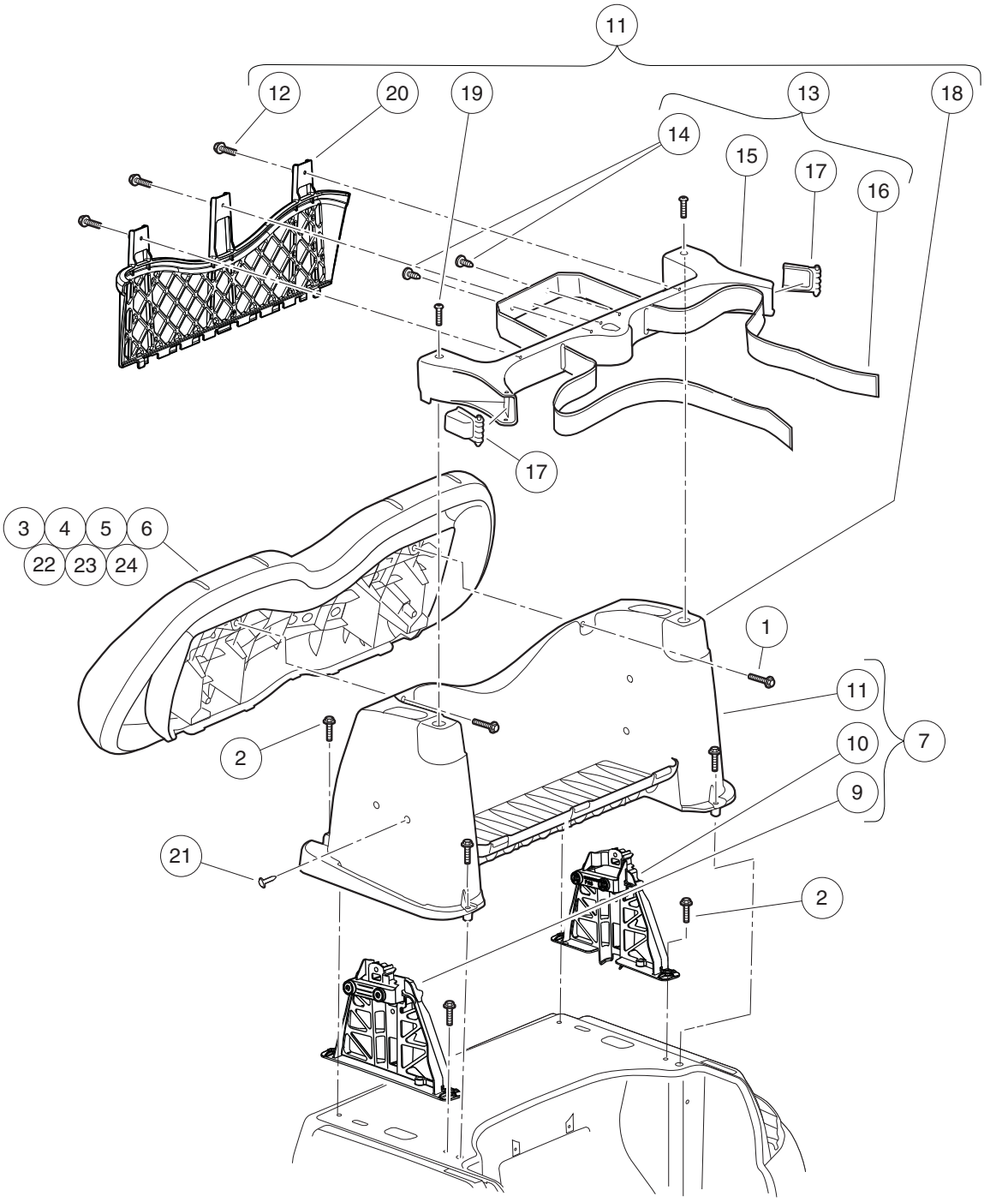
11
12
20
19
13
18
14
15
17
16
17
3
4
5
6
22
23
24
1
11
7
10
9
2
21
2
000435-010

BACKREST AND STRUCTURAL ACCESSORY MODULE (SAM)

ITEM	PART NO.	DESCRIPTION	QTY
		1 2 3 4	
1	102296530	Screw - M6 X 1.0 X 30 Sems	2
2	102298240	Bolt, Flange Head, M8-1.25 X 40	6
3	103853121	Service, Beige, Seatback Asm	1
4	103853122	Service, White, Seatback Asm	1
5	103853124	Service, Gray, Seatback Asm	1
6	103853125	Service, Black, Seatback Asm	1
7	103952901	Kit, Sam Assembly (includes items 8 through 11)	1
8	102297230	Screw, M6, Torx, Interlock Thread	4
9	103929301	Support- Canopy, Drv	1
10	103929302	Support- Canopy, Pass	1
11	N/A	Asm, Prec, Sam (includes items 12 through 20)	1
12	102297230	Screw, M6, Torx, Interlock Thread	3
13	102504001	Asm-bag Hoop (includes items 14 through 17)	1
14	1010434	Barrel - Plastic	2
15	102504201	Hoop-bag	1
16	102504301	Strap, Bag	1
17	102517001	Buckle-bag Strap	2
18	N/A	Structural Accessory Module	1
19	103327601	Screw, 5/16, Torx, Bosscrew	2
20	103699401	Panel, Sam, Prec	1
21	103978801	Barrel-push 6mm	4
22	105223421	Sp,asm,prem Seat Back,lt Beige	1
23	105223422	Sp,asm,prem Seat Back,camello	1
24	105223423	Sp,asm,prem Seat Back,off Wht	1

Note: Screws (item 8) not shown. These are four new screws to replace those used to attach accessory mounting brackets to SAM (item 18).

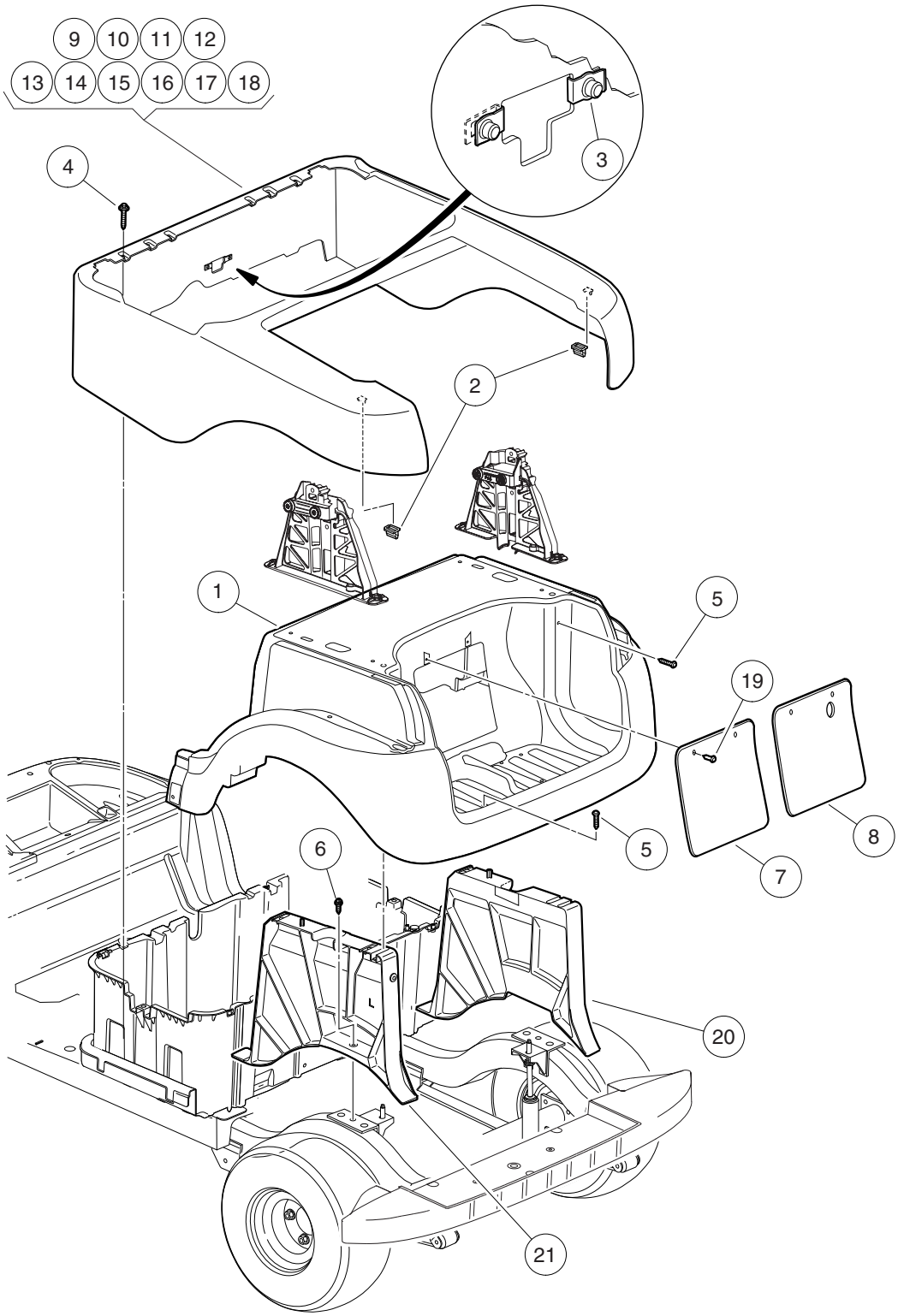

000436-011

ITEM	PART NO.	DESCRIPTION	QTY
		1 2 3 4	
1	102279104	Underbody - Rear, Blk	1
2	102292701	Clip-body-trim	2
3	102296601	U-Nut, M6-1.0, Prevailing Torque	2
4	102297230	Screw, M6, Torx, Interlock Thread	4
5	102298030	Screw, K80x30, Torx Pn Hd Pt	4
6	102298716	M8-1.25x16 Taptite	2
7	102501402	Panel, Access, Black	1
8	102501403	Panel, Access, Black, with Punched Hole	1
9	102502301	Panel, Beauty, Rear, White	1
10	102502302	Panel, Beauty, Rear, Beige	1
11	102502304	Panel, Beauty, Rear, Gray	1
12	102502305	Panel, Beauty, Rear, Red	1
13	102502306	Panel, Beauty, Rear, Burgundy	1
14	102502307	Panel, Beauty, Rear, Green	1
15	102502308	Panel, Beauty, Rear, Blue	1
16	102502309	Panel, Beauty, Rear, Black	1
17	102502311	Panel-beauty Rear, Cayenne	1
18	102502313	Panel-beauty Rear, Atlantic	1
19	102967901	Rivet, Removable, Tuflok 1/4"	2
20	103812901	Asm, Rear Underbody Supp, Rh	1
21	103813001	Asm, Rear Underbody Supp, Lh	1

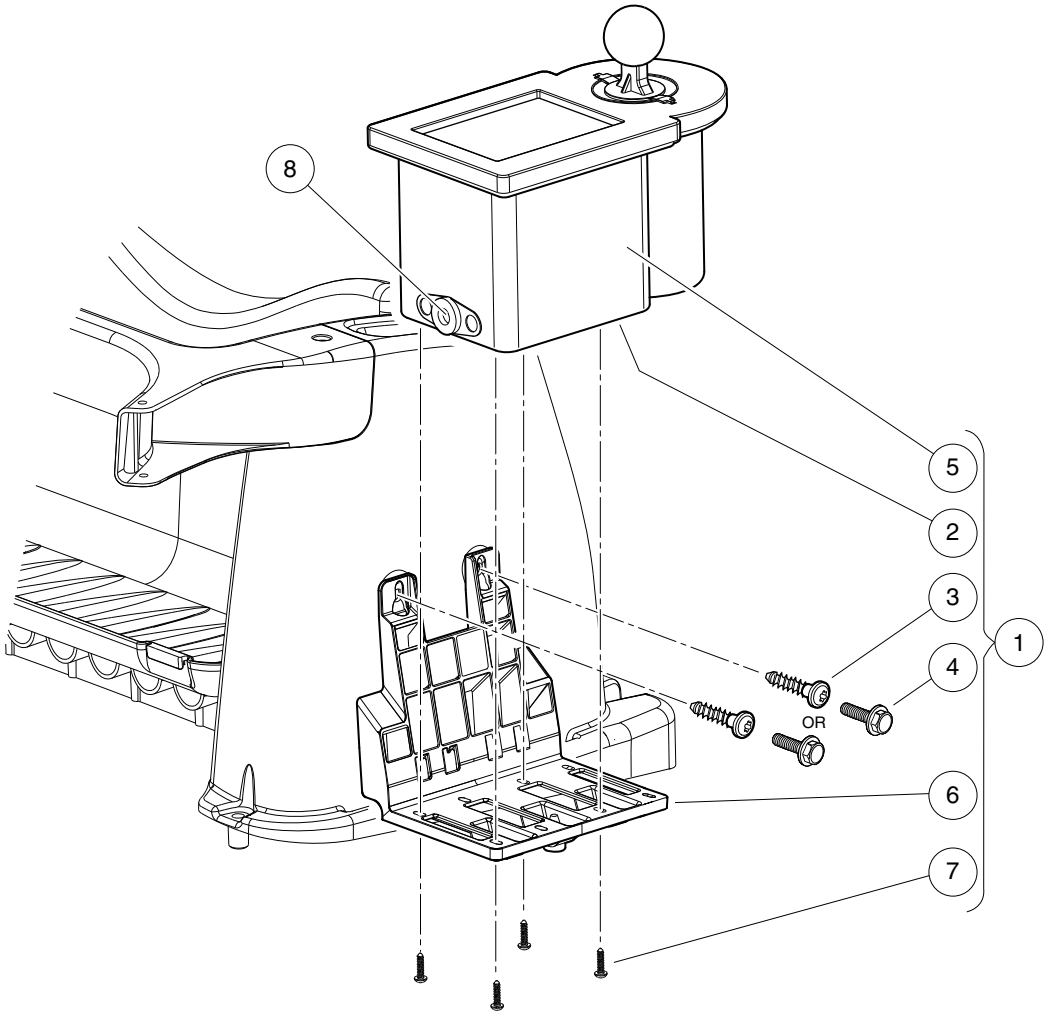

001046-001

CLUB AND BALL CLEANER KIT

ITEM	PART NO.	DESCRIPTION	QTY
		1 2 3 4	
1	102538803	Ball Washer Instl, Prec, Field (includes items 2 through 7)	1
2	1010436	Bumper, Rubber	1
3	102297230	Screw, M6, Torx, Interlock Thread	2
4	102541401	Bolt-m6x1.0x20 Hex Flhd Blk-l	2
5	103662801	Washer, Ball, Black	1
6	103994101	Bracket, Prec Ball Washer	1
7	1620	Screw, #10-16 X 0.75 Pan-Head Tap	4
8	AM1231201	Drain Plug, Club Clean	1

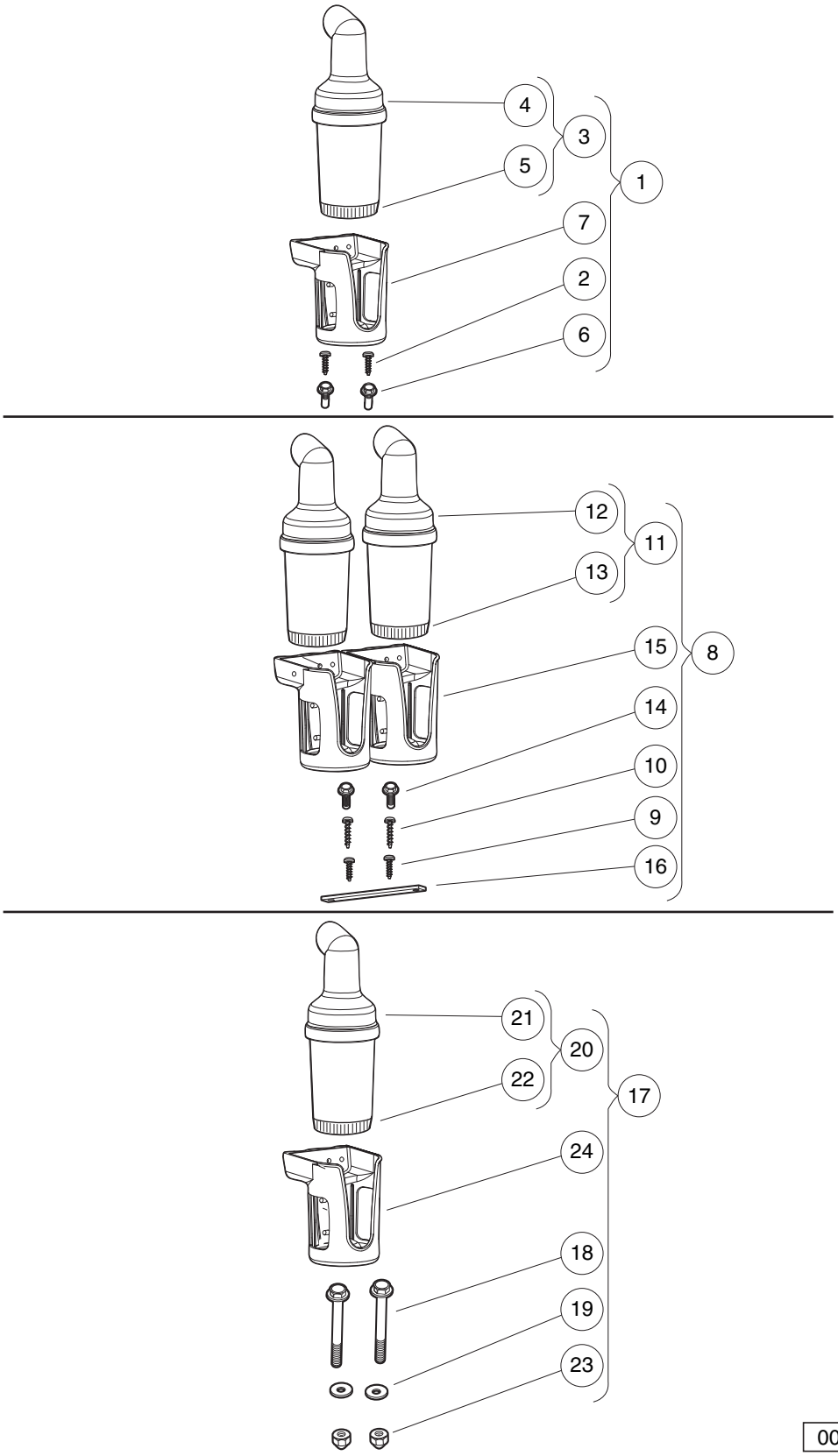
4
3
5
1
7
2
6
12
11
13
15
8
14
10
9
16
21
20
22
17
24
18
19
23
001048-001

SAND BOTTLE KITS

ITEM	PART NO.	DESCRIPTION	QTY
		1 2 3 4	
1	103451901	Kit, Sand Bottle, Sam, Single (includes items 2 through 7)	1
2	102297230	Screw, M6, Torx, Interlock Thread	2
3	102478201	Asm, Sand Bottle, Bottom-Fill, Curve/Grip Neck (includes items 4 and 5)	1
4	N/A	Sand Bottle, Bottom-Fill, Curve/Grip Neck	1
5	102478101	Cap, Sand Bottle, Bottom-Fill	1
6	102541425	Bolt, M6x1.0x25, Hex Flhd, Blk-l	2
7	103451301	Basket, Sand Bottle	1
8	103451902	Kit, Sand Bottle, Sam, Dual (includes items 9 through 16)	1
9	102296020	Screw, Torx Pan Hd Pt, M6 X 20	2
10	102297230	Screw, M6, Torx, Interlock Thread	2
11	102478201	Asm, Sand Bottle, Bottom-Fill, Curve/Grip Neck (includes items 12 and 13)	2
12	N/A	Sand Bottle, Bottom-Fill, Curve/Grip Neck	1
13	102478101	Cap, Sand Bottle, Bottom-Fill	1
14	102541425	Bolt, M6x1.0x25, Hex Flhd, Blk-l	2
15	103451301	Basket, Sand Bottle	2
16	103451401	Link, Dual Basket	1
17	103451903	Kit, Sand Bottle, Strut, Prec (includes items 18 through 24)	1
18	102296150	Bolt - M6x1.0x50 Hex Flng Hd	2
19	102296301	Washer, M6x18x1.6 Flat	2
20	102478201	Asm, Sand Bottle, Bottom-Fill, Curve/Grip Neck (includes items 21 and 22)	1
21	N/A	Sand Bottle, Bottom-Fill, Curve/Grip Neck	1
22	102478101	Cap, Sand Bottle, Bottom-Fill	1
23	102582401	Cap Nut M6, Sp	2
24	103451301	Basket, Sand Bottle	1

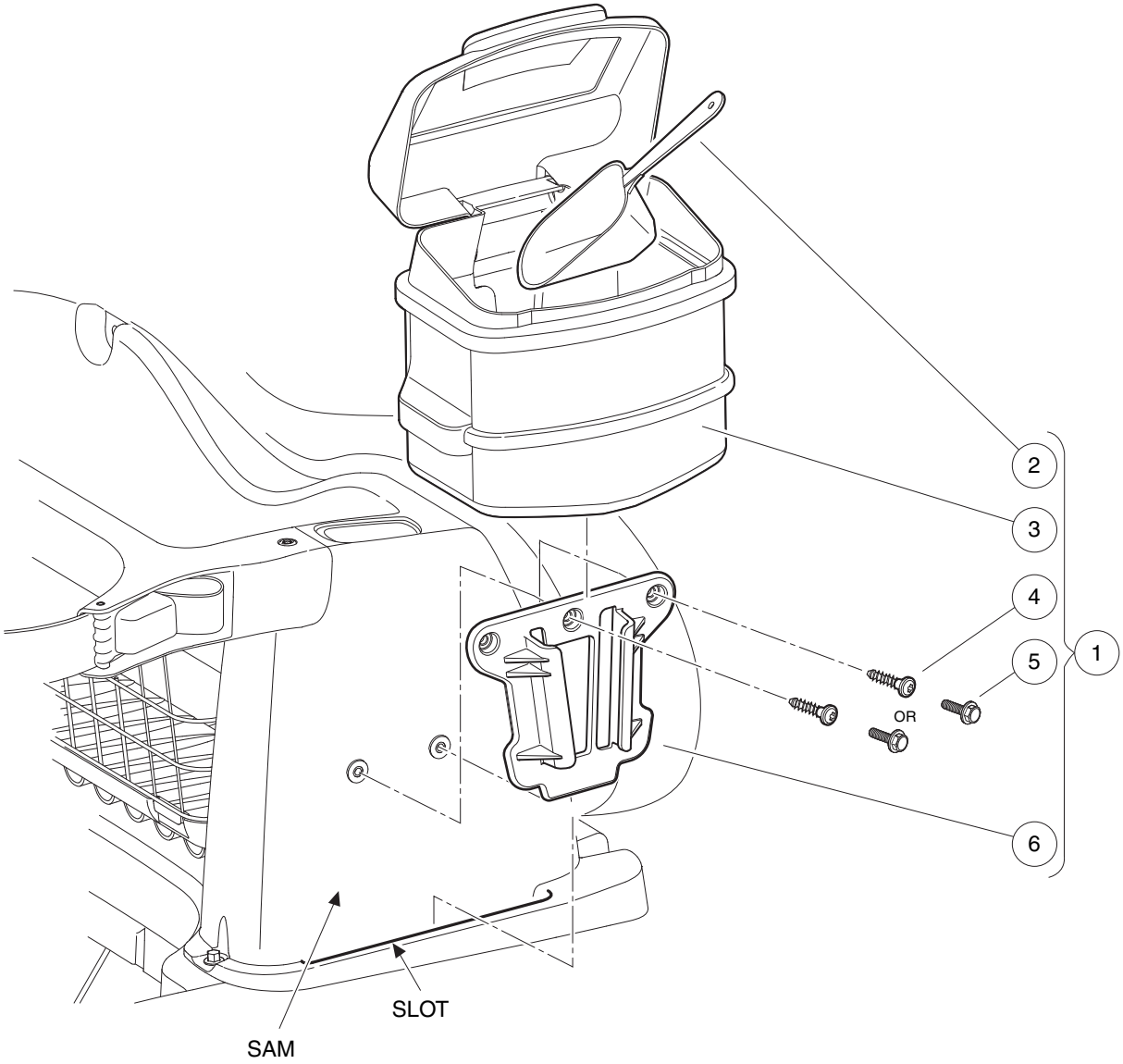

001047-001

SAND BUCKET KITS

ITEM	PART NO.	DESCRIPTION	QTY
		1 2 3 4	
1	102536103	Sand Bucket Instl, Prec, Field (includes items 2 through 6)	1
2	1017041	Scoop, Plastic Sand	1
3	101985201	Bucket Assy, Sand	1
4	102297230	Screw, M6, Torx, Interlock Thread	2
5	102541401	Bolt-m6x1.0x20 Hex Flhd Blk-l	2
6	103886801	Accessory Bracket, Prec	1

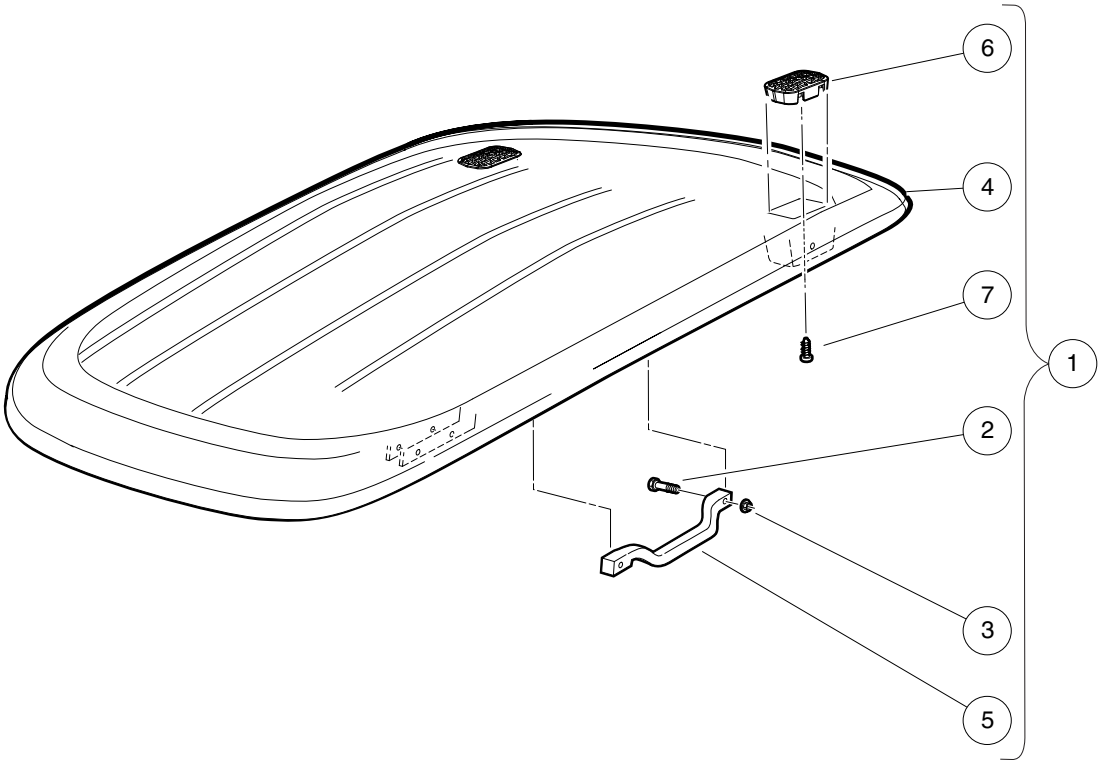

000439-009

CANOPY – WHITE

ITEM	PART NO.	DESCRIPTION	QTY
		1 2 3 4	
1	104008001	Asm, Canopy W/handles, White (includes items 2 through 7)	1
2	102296140	Bolt, Flanged Head, M6x1.0x40	4
3	102296401	Nut, M6x1.0, Flange, Metal Lock	4
4	102508901	Canopy-white	1
5	102511601	Handle, Canopy (White)	2
6	103205101	Cover, Drain, Canopy, Precedent	2
7	103210101	Screw, #8 X.75, Torx, Tapping	2

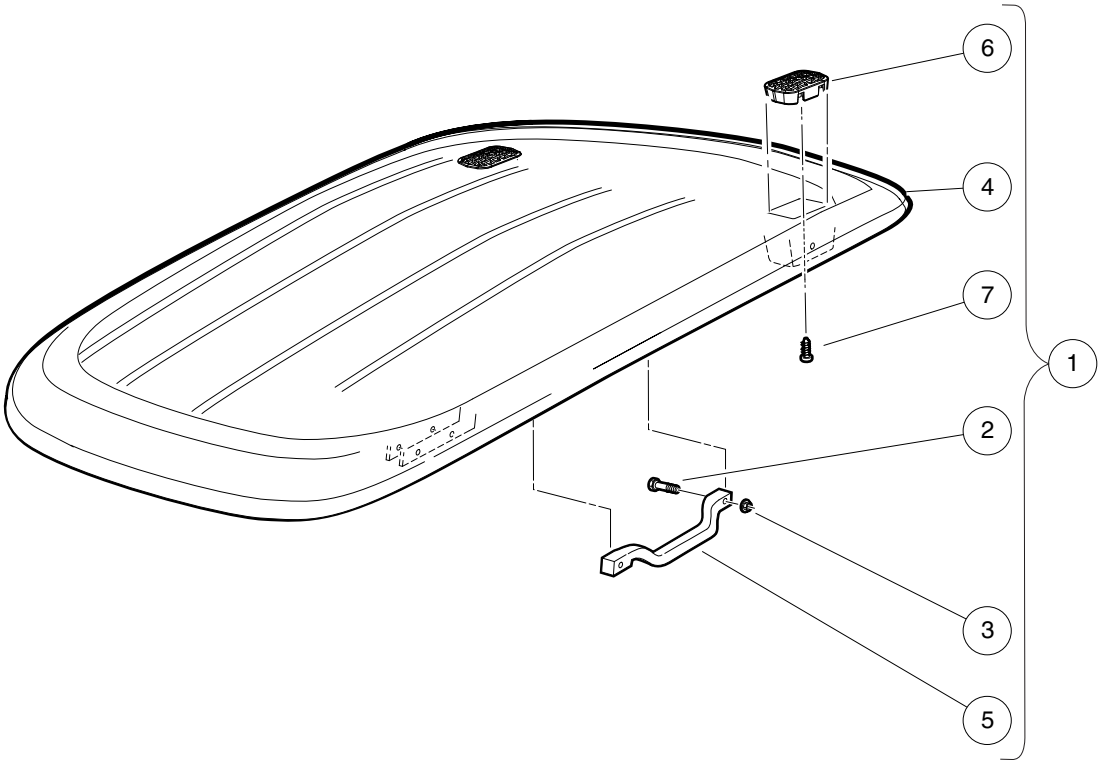

000439-009

CANOPY – BEIGE

ITEM	PART NO.	DESCRIPTION	QTY
		1 2 3 4	
1	104008002	Asm, Canopy W/handles, Beige (includes items 2 through 7)	1
2	102296140	Bolt, Flanged Head, M6x1.0x40	4
3	102296401	Nut, M6x1.0, Flange, Metal Lock	4
4	102508902	Canopy-beige	1
5	102511602	Handle, Canopy (Beige)	2
6	103205101	Cover, Drain, Canopy, Precedent	2
7	103210101	Screw, #8 X.75, Torx, Tapping	2

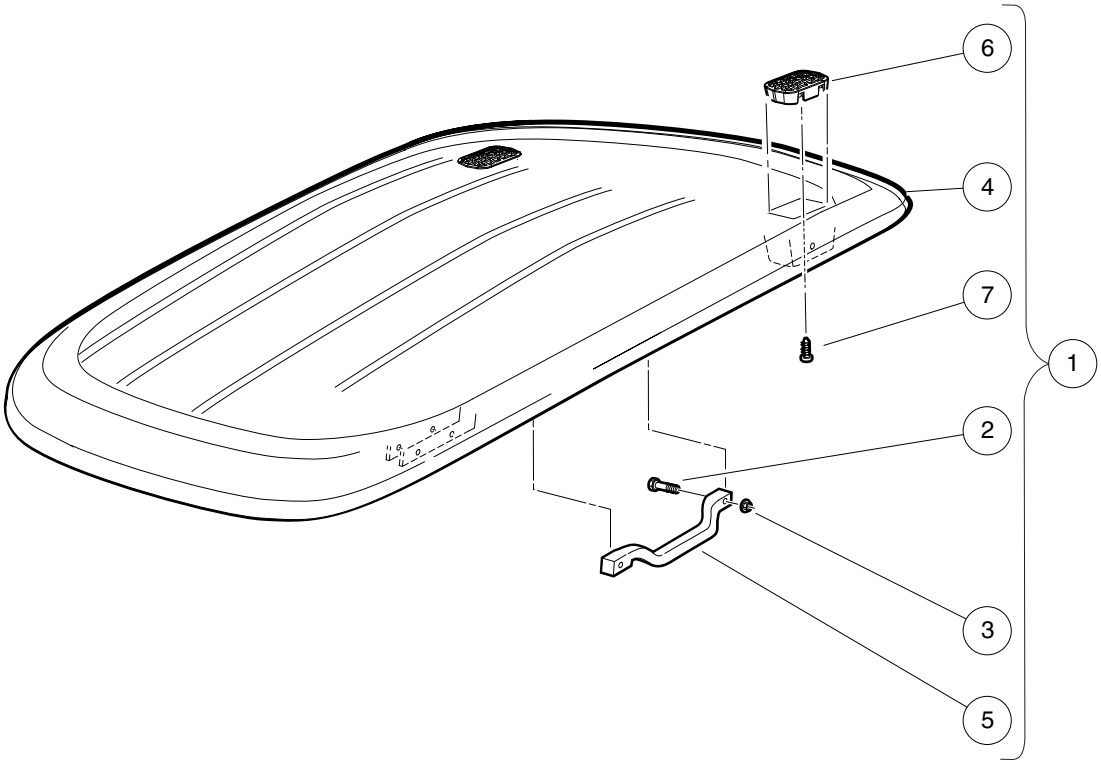

000439-009

CANOPY – BLACK

ITEM	PART NO.	DESCRIPTION	QTY
		1 2 3 4	
1	104008003	Asm, Canopy W/handles, Black (includes items 2 through 7)	1
2	102296140	Bolt, Flanged Head, M6x1.0x40	4
3	102296401	Nut, M6x1.0, Flange, Metal Lock	4
4	102508903	Canopy-black	1
5	102511603	Handle-canopy (black)	2
6	103205101	Cover, Drain, Canopy, Precedent	2
7	103210101	Screw, #8 X.75, Torx, Tapping	2

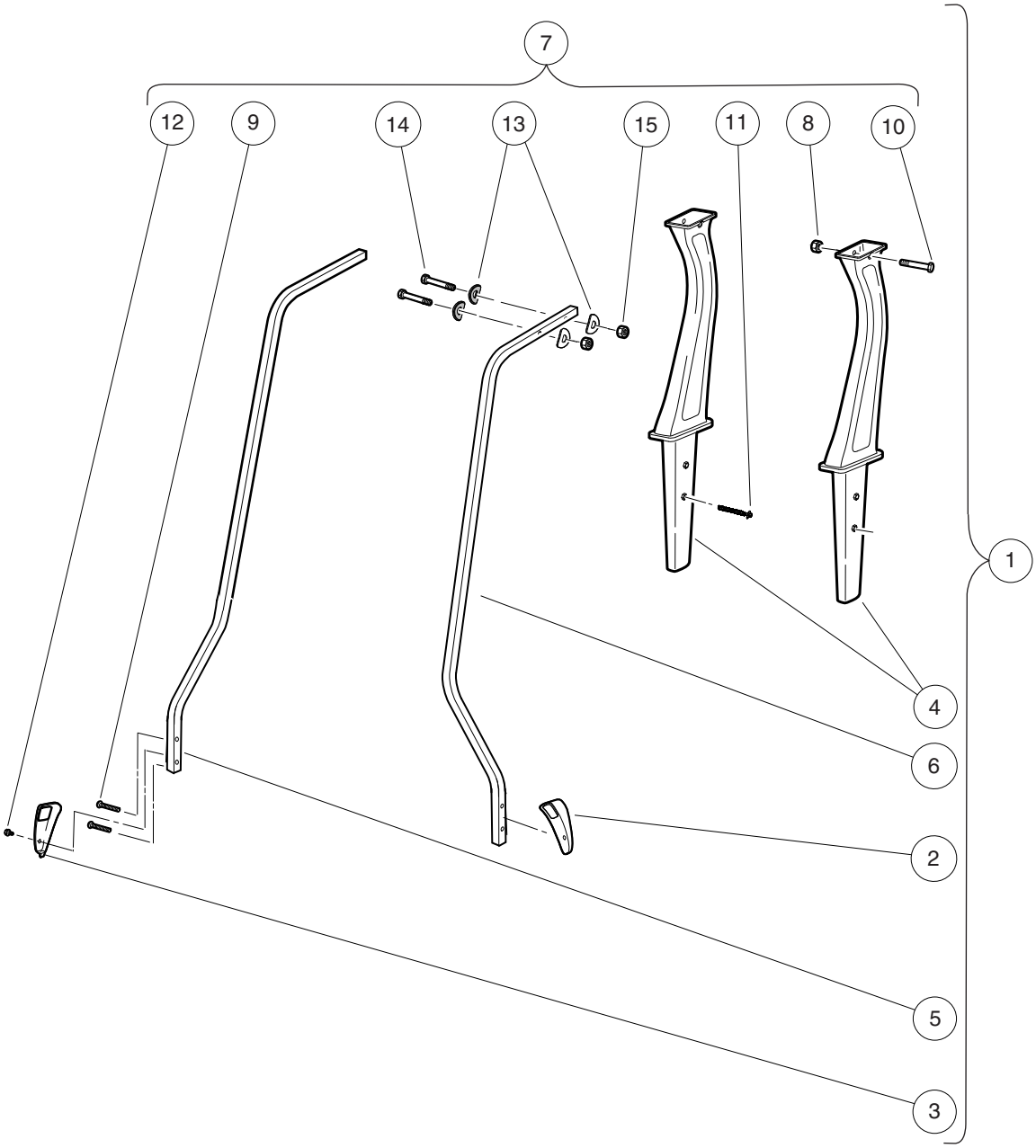

000439-010

CANOPY STRUTS

ITEM	PART NO.	DESCRIPTION	QTY
		1 2 3 4	
1	104008901	Kit, Sp, Struts, Prec, Std (includes items 2 through 7)	1
2	102400002	Cover, Lh Canopy Support, Blk	1
3	102400102	Cover, Rh Canopy Support, Blk	1
4	102513501	Asm-rear Canopy Support	2
5	103750001	Strut, Canopy Front Rh-prec	1
6	103750101	Strut, Canopy Front Lh-prec	1
7	104008501	Kit, Hardware, Canopy, Std (includes items 8 through 15)	1
8	102298401	Nut,m8,all Metal Lock	2
9	102299065	M8-1.25 X 65 Tx Bttn Hd Bolt	4
10	102299360	Screw, M8-1.25 X 60, Sems, Tx	2
11	102299601	Screw, Pt, K80x70 Hex Flg Hd	2
12	102544201	Screw, M6 Hex	2
13	103196001	Washer, Conical Spring, Canopy	8
14	103199301	Bolt - M6 X 1 X 45 Hh Grey	4
15	103200301	Nut, M6 x 1.00	4

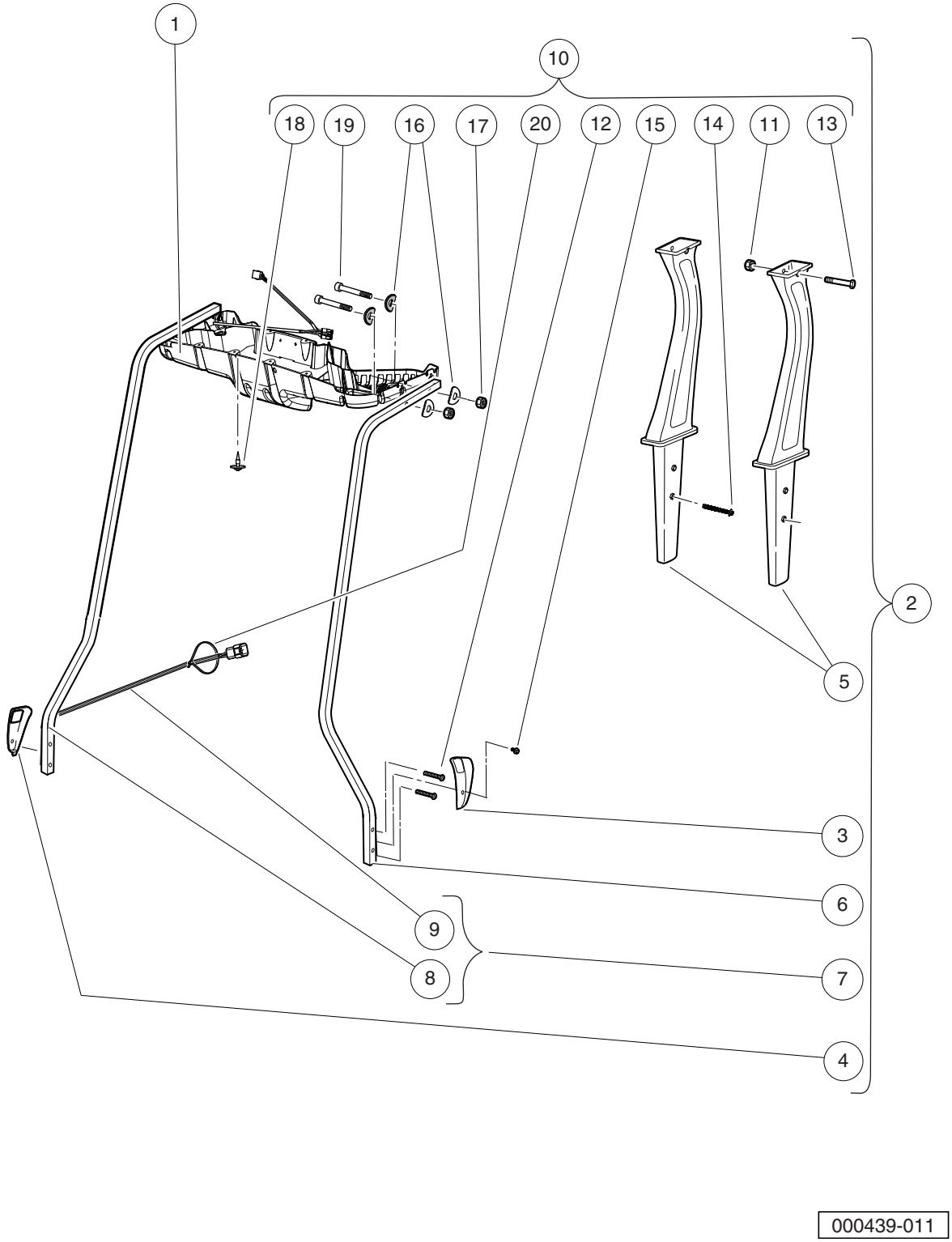
1
10
18
19
16
17
20
12
15
14
11
13
2
5
3
6
9
8
7
4
000439-011

VISAGE CANOPY STRUTS AND CONSOLE

ITEM	PART NO.	DESCRIPTION	QTY
		1 2 3 4	
1	103725601	Support, Guardian Canopy Mt	1
2	104008902	Kit, Sp, Struts, Prec, Vis (includes items 3 through 10)	1
3	102400002	Cover, Lh Canopy Support, Blk	1
4	102400102	Cover, Rh Canopy Support, Blk	1
5	102513501	Asm-rear Canopy Support	2
6	103750101	Strut, Canopy Front Lh-prec	1
7	103775201	Asm, Frnt Strut, Prec, Ps, V2 (includes items 8 and 9)	1
8	103750001	Strut, Canopy Front Rh-prec	1
9	103775601	Harness, Canopy Mount, V2	1
10	104008502	Kit, Hardware, Canopy, Vis (includes items 11 through 20)	1
11	102298401	Nut,m8,all Metal Lock	2
12	102299065	M8-1.25 X 65 Tx Bttn Hd Bolt	4
13	102299360	Screw, M8-1.25 X 60, Sems, Tx	2
14	102299601	Screw, Pt, K80x70 Hex Flg Hd	2
15	102544201	Screw, M6 Hex	2
16	103196001	Washer, Conical Spring, Canopy	4
17	103200301	Nut, M6 x 1.00	4
18	103774801	Screw, Pt, Washer Head, 4x16	6
19	103881201	Socket Head Cap Screw, M6 X 50mm, Magni-Coated	4
20	8990	Tie Wrap, 8" Nylon	1

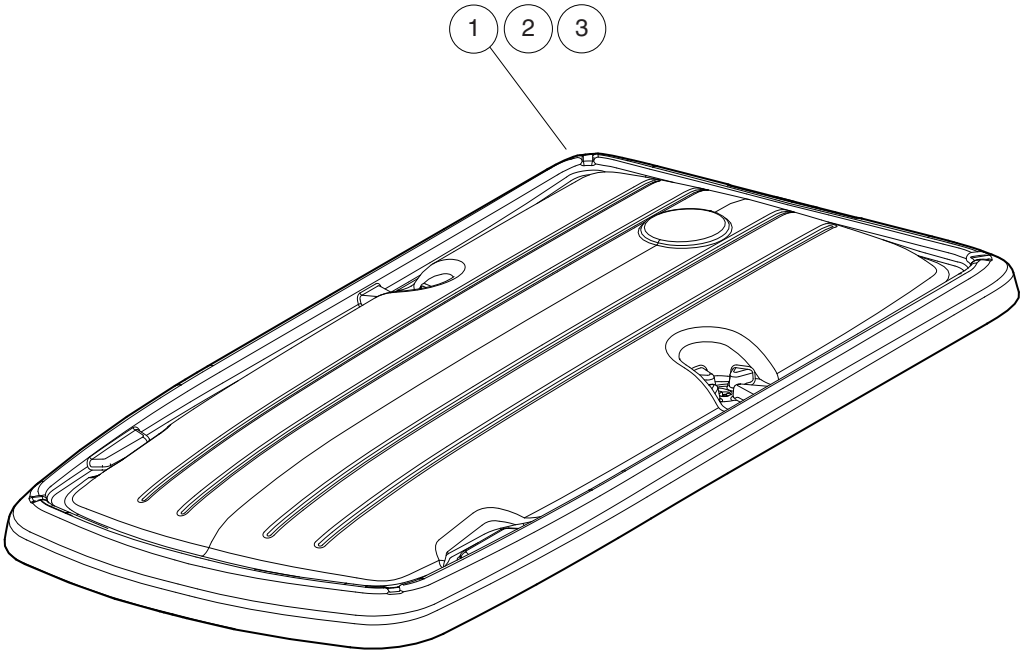

000439-012

FOUR-PASSENGER MONSOON CANOPY

ITEM	PART NO.	DESCRIPTION	QTY
		1 2 3 4	
1	103286201	Asm, Canopy 4p Monsoon Xl, Wht	1
2	103286202	Asm, Canopy 4p Monsoon Xl, Bge	1
3	103286203	Asm, Canopy 4p Monsoon Xl, Blk	1

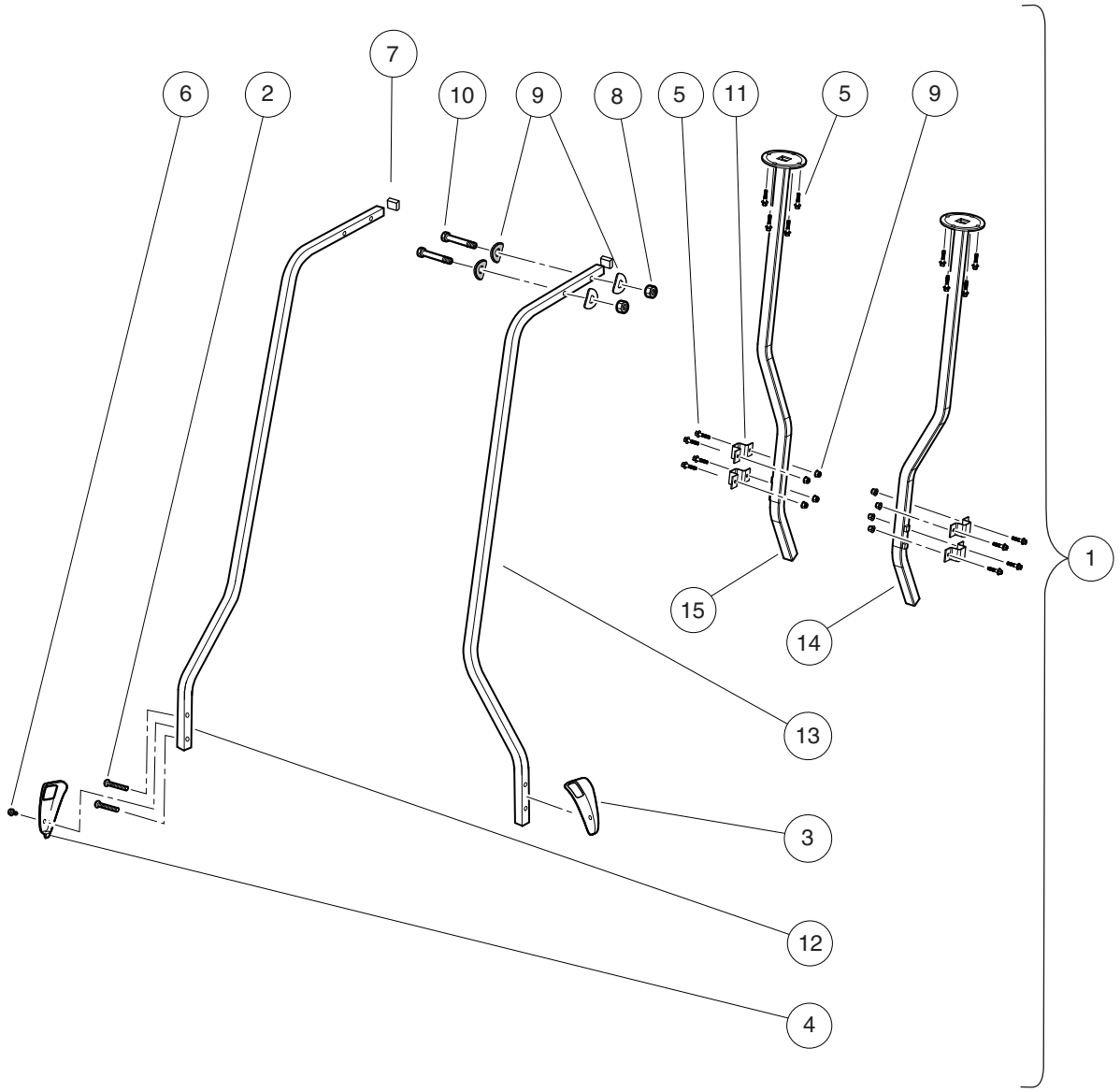

000439-013

FOUR-PASSENGER MONSOON CANOPY STRUTS

ITEM	PART NO.	DESCRIPTION	QTY
		1 2 3 4	
1	103725701	Kit- Canopy 4 Pass Strut (includes items 2 through 15)	1
2	102299065	M8-1.25 X 65 Tx Bttn Hd Bolt	4
3	102400002	Cover, Lh Canopy Support, Blk	1
4	102400102	Cover, Rh Canopy Support, Blk	1
5	102541425	Bolt, M6x1.0x25, Hex Flhd, Blk-l	16
6	102544201	Screw, M6 Hex	2
7	102581201	Plug, Square - 25.4 mm	2
8	102621501	Nut, Flange, M6 X 1.0, Nylon	12
9	103196001	Washer, Conical Spring, Canopy	8
10	103199301	Bolt - M6 X 1 X 45 Hh Grey	4
11	103653201	Bracket- Hat, Strut	4
12	103750001	Strut, Canopy Front Rh-prec	1
13	103750101	Strut, Canopy Front Lh-prec	1
14	103816401	Weldment- Drain Strut, Drv	1
15	103816402	Weldment- Drain Strut, Pas	1

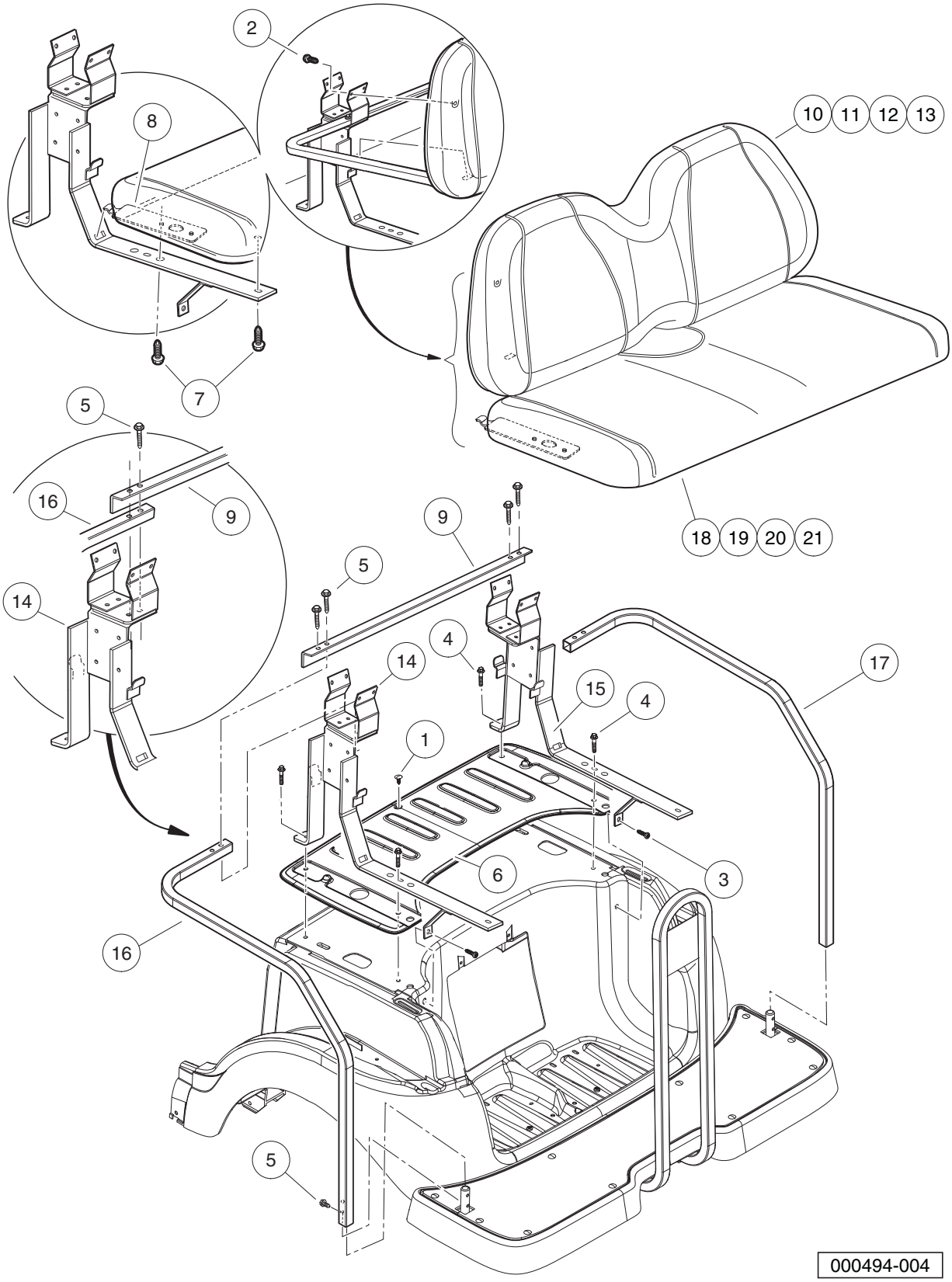
2
8
10
11
12
13
7
5
16
9
9
18
19
20
21
5
14
4
14
17
15
4
1
6
3
16
5
000494-004

REAR SEAT – PRECEDENT VILLAGER 4

ITEM	PART NO.	DESCRIPTION	QTY
		1 2 3 4	
1	1010434	Barrel - Plastic	10
2	102296530	Screw - M6 X 1.0 X 30 Sems	4
3	102298030	Screw, K80x30, Torx Pn Hd Pt	2
4	102298240	Bolt, Flange Head, M8-1.25 X 40	1
5	102298745	M8-1.25x45 Taptite	10
6	102531502	Cover- 4 Pass W/canopy	1
7	102541425	Bolt, M6x1.0x25, Hex Flhd, Blk-I	4
8	102573101	Bracket, 4-pass Lower Seat	2
9	103653001	Angle, Strut, Tie	1
10	103853121	Service, Beige, Seatback Asm	1
11	103853122	Service, White, Seatback Asm	1
12	103853124	Service, Gray, Seatback Asm	1
13	103853125	Service, Black, Seatback Asm	1
14	103866801	Weldment, Sprt, 4pass, Drv	1
15	103866802	Weldment, Sprt, 4pass, Pasrv	1
16	103866901	Restraint-lh 4pass Hip	1
17	103866902	Restraint-rh 4pass Hip	1
18	105101221	Service, Beige, 4pass Rear Btm	1
19	105101222	Service, White, 4pass Rear Btm	1
20	105101224	Service, Gray, 4pass Rear Btm	1
21	105101225	Service, Black, 4pass Rear Btm	1

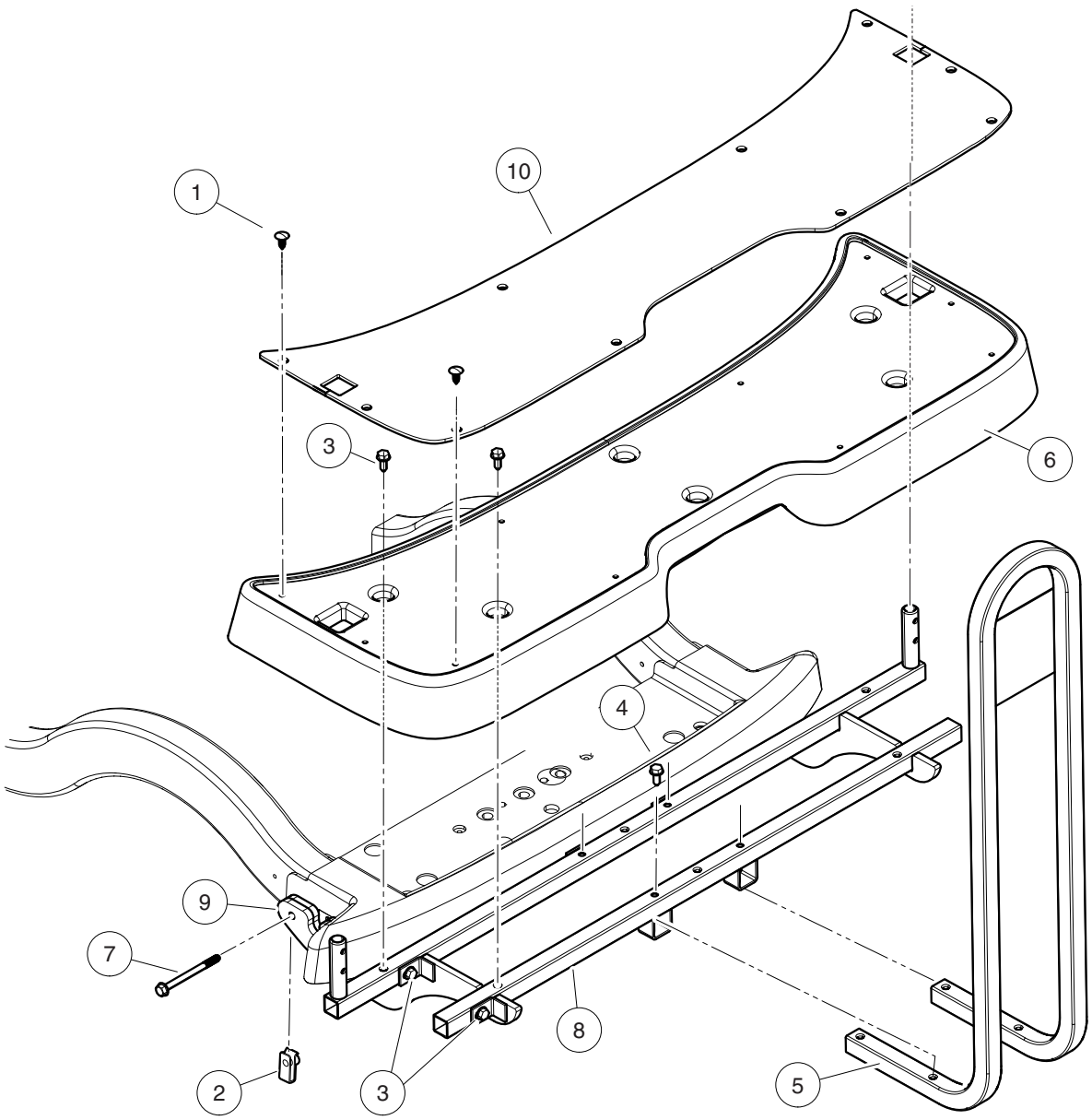

000493-004

REAR FOOTREST ASSEMBLY, PRECEDENT VILLAGER 4

ITEM	PART NO.	DESCRIPTION	QTY
		1 2 3 4	
1	1010434	Barrel - Plastic	10
2	102298601	J-clip - M8 X 1.25	4
3	102298720	Screw, M8-1.25x20, Taptite	8
4	102298745	M8-1.25x45 Taptite	4
5	102531001	Handrail Weldment, Rear Seat	1
6	102531402	Footdeck, 4-Passenger, Black	1
7	102534201	Bolt - Fl Hd, M8 X 95	4
8	102584701	Weld, 4-pass Footdeck-a	1
9	102584801	Weld, 4-pass Footdeck-b	1
10	103922401	Floormat, 4-pass, Rear	1

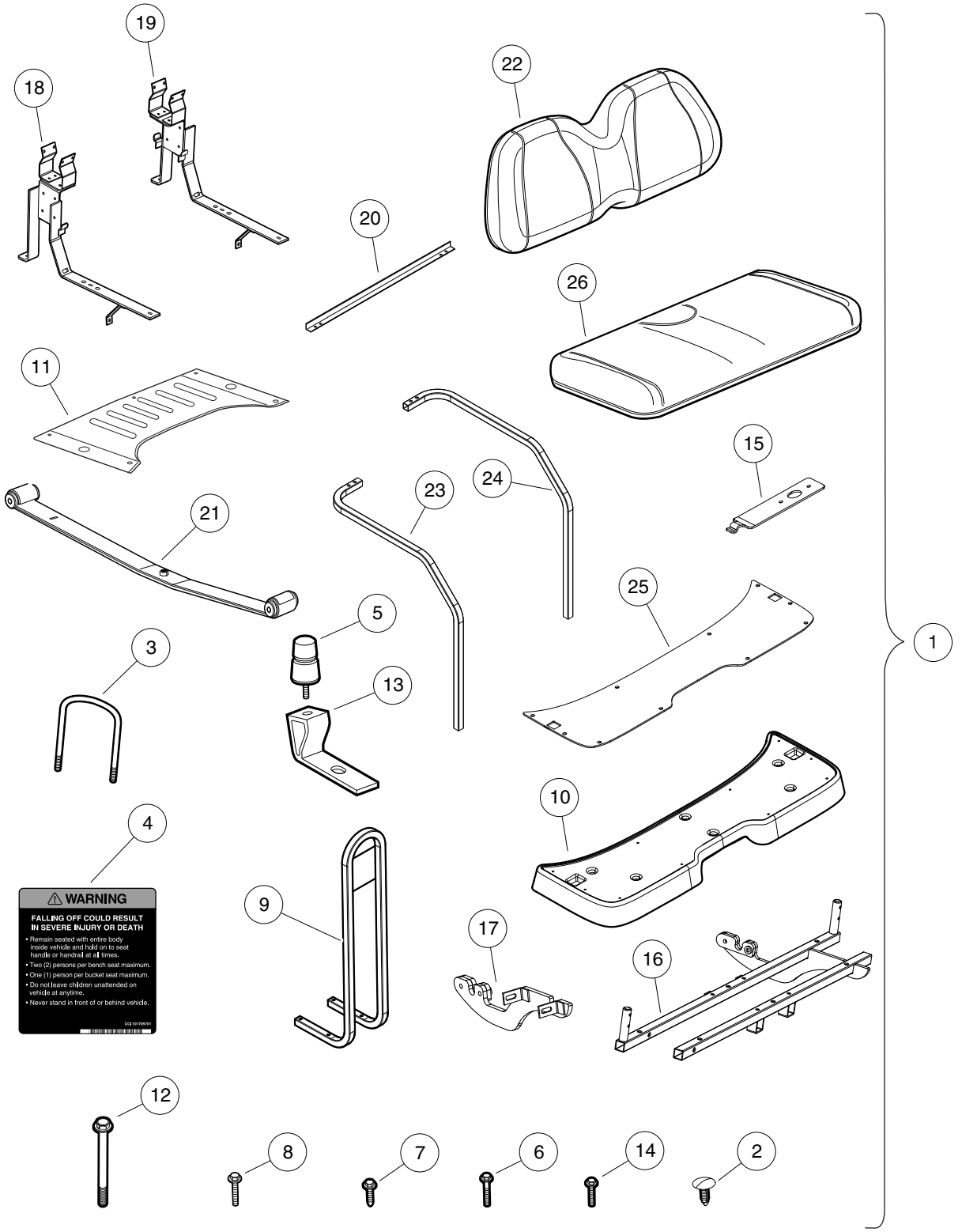
19
18
22
20
26
11
15
24
23
21
25
5
3
13
1
10
4
9
17
16
12
8
7
6
14
2
WARNING
FALLING OFF COULD RESULT IN SEVERE INJURY OR DEATH
• Remain seated with entire body inside vehicle and hold on to seat handle or handrail at all times.
• Two (2) persons per bench seat maximum.
• One (1) person per bucket seat maximum.
• Do not leave children unattended on vehicle at anytime.
• Never stand in front of or behind vehicle.

000505-008

FOUR PASSENGER CONVERSION KIT, MONSOON – BEIGE

ITEM	PART NO.	DESCRIPTION	QTY
		1 2 3 4	
1	102570905	Kit-4pass, Monsoon Xl, Beige (includes items 2 through 26)	1
2	1010434	Barrel - Plastic	11
3	1014902	U-Bolt	2
4	101705701	Decal, Warning	1
5	1017235	Bumper, Jounce	2
6	102296530	Screw - M6 X 1.0 X 30 Sems	4
7	102298720	Screw, M8-1.25x20, Taptite	12
8	102298745	M8-1.25x45 Taptite	8
9	102531001	Handrail Weldment, Rear Seat	1
10	102531402	Footdeck, 4-Passenger, Black	1
11	102531502	Cover- 4 Pass W/canopy	1
12	102534201	Bolt - Fl Hd, M8 X 95	4
13	102534801	Jounce Bumper Bracket	2
14	102541425	Bolt, M6x1.0x25, Hex Flhd, Blk-l	6
15	102573101	Bracket, 4-pass Lower Seat	2
16	102584701	Weld, 4-pass Footdeck-a	1
17	102584801	Weld, 4-pass Footdeck-b	1
18	103624601	Weldment, Spt, 4pass, Drv	1
19	103624602	Weldment, Spt, 4pass, Pas	1
20	103653001	Angle, Strut, Tie	1
21	103742303	Asm, Rear Leaf Spring, Prec, 4-Passenger	2
22	103853121	Service, Beige, Seatback Asm	1
23	103866901	Restraint-lh 4pass Hip	1
24	103866902	Restraint-rh 4pass Hip	1
25	103922401	Floormat, 4-pass, Rear	1
26	105101221	Service, Beige, 4pass Rear Btm	1

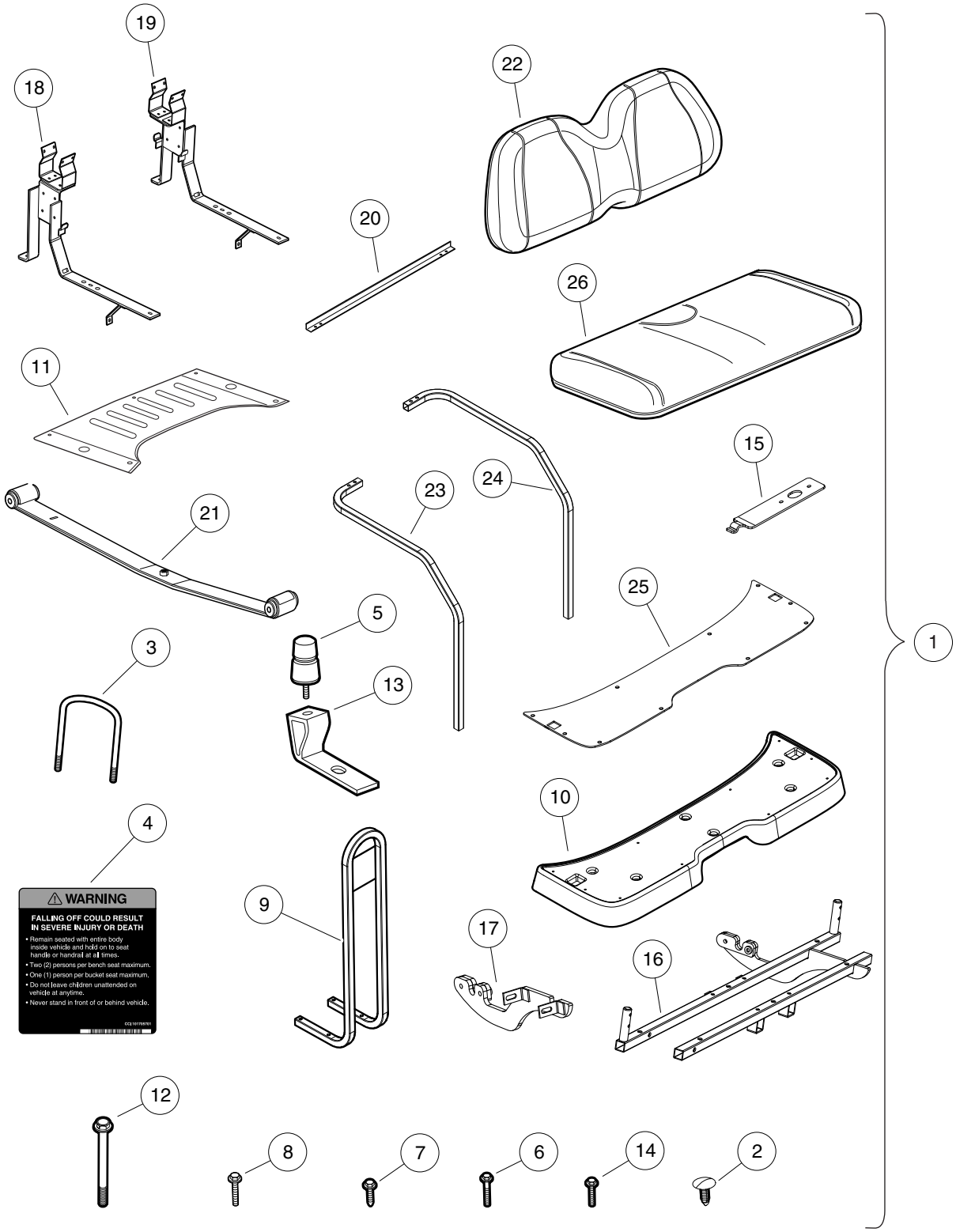
19
18
22
20
26
11
15
24
23
21
25
5
3
13
1
10
4
9
17
16
12
8
7
6
14
2
WARNING
FALLING OFF COULD RESULT IN SEVERE INJURY OR DEATH
• Remain seated with entire body inside vehicle and hold on to seat handle or handrail at all times.
• Two (2) persons per bench seat maximum.
• One (1) person per bucket seat maximum.
• Do not leave children unattended on vehicle at anytime.
• Never stand in front of or behind vehicle.

000505-008

FOUR PASSENGER CONVERSION KIT, MONSOON – WHITE

ITEM	PART NO.	DESCRIPTION	QTY
		1 2 3 4	
1	102570906	Kit-4pass, Monsoon Xl, White (includes items 2 through 26)	1
2	1010434	Barrel - Plastic	11
3	1014902	U-Bolt	2
4	101705701	Decal, Warning	1
5	1017235	Bumper, Jounce	2
6	102296530	Screw - M6 X 1.0 X 30 Sems	4
7	102298720	Screw, M8-1.25x20, Taptite	12
8	102298745	M8-1.25x45 Taptite	8
9	102531001	Handrail Weldment, Rear Seat	1
10	102531402	Footdeck, 4-Passenger, Black	1
11	102531502	Cover- 4 Pass W/canopy	1
12	102534201	Bolt - Fl Hd, M8 X 95	4
13	102534801	Jounce Bumper Bracket	2
14	102541425	Bolt, M6x1.0x25, Hex Flhd, Blk-l	6
15	102573101	Bracket, 4-pass Lower Seat	2
16	102584701	Weld, 4-pass Footdeck-a	1
17	102584801	Weld, 4-pass Footdeck-b	1
18	103624601	Weldment, Spt, 4pass, Drv	1
19	103624602	Weldment, Spt, 4pass, Pas	1
20	103653001	Angle, Strut, Tie	1
21	103742303	Asm, Rear Leaf Spring, Prec, 4-Passenger	2
22	103853122	Service, White, Seatback Asm	1
23	103866901	Restraint-lh 4pass Hip	1
24	103866902	Restraint-rh 4pass Hip	1
25	103922401	Floormat, 4-pass, Rear	1
26	105101222	Service, White, 4pass Rear Btm	1

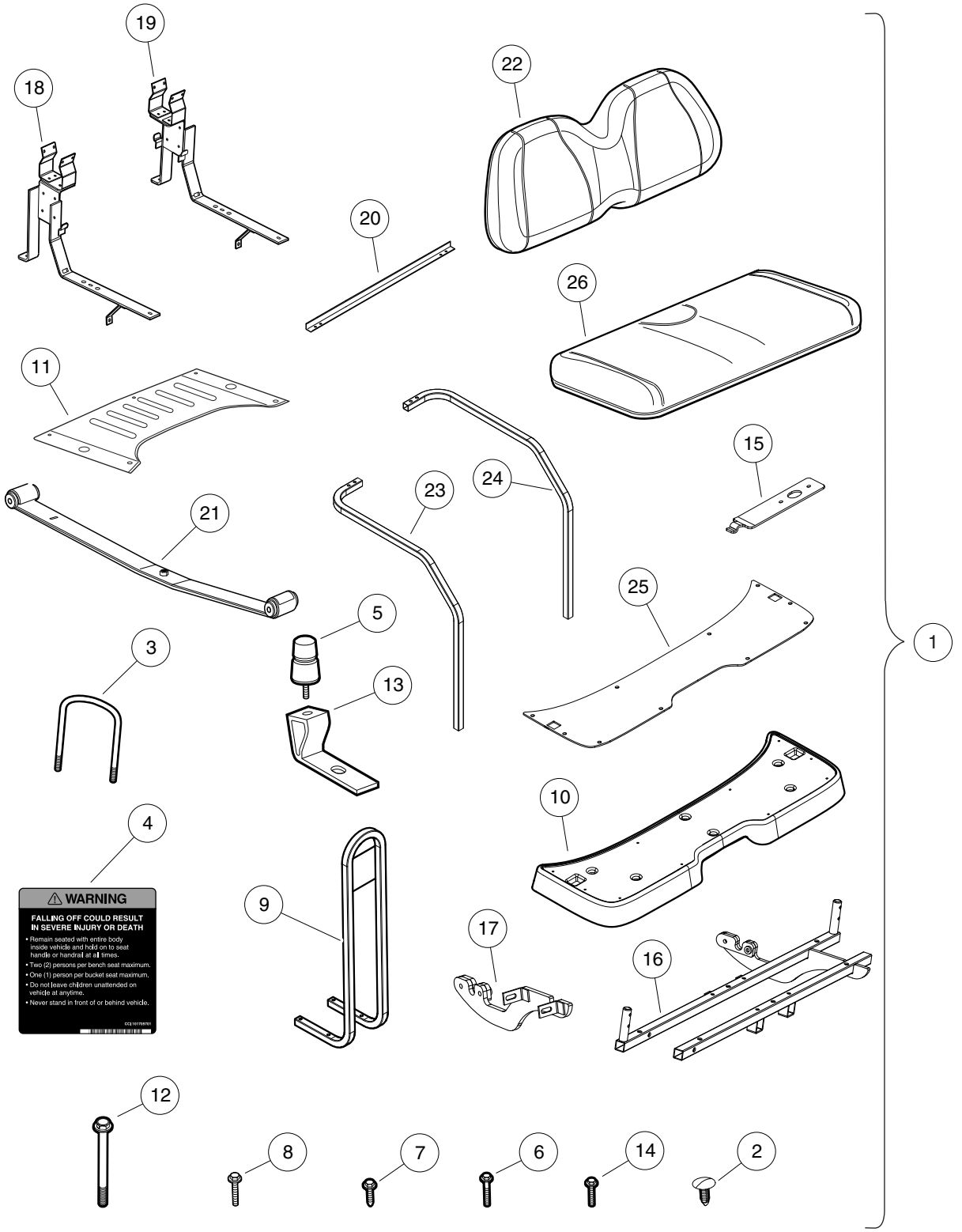
19
18
22
20
26
11
15
24
23
21
25
5
3
13
1
10
4
9
17
16
12
8
7
6
14
2
WARNING
FALLING OFF COULD RESULT IN SEVERE INJURY OR DEATH
• Remain seated with entire body inside vehicle and hold on to seat handle or handrail at all times.
• Two (2) persons per bench seat maximum.
• One (1) person per bucket seat maximum.
• Do not leave children unattended on vehicle at anytime.
• Never stand in front of or behind vehicle.

000505-008

FOUR PASSENGER CONVERSION KIT, MONSOON – GRAY

ITEM	PART NO.	DESCRIPTION	QTY
		1 2 3 4	
1	102570907	Kit-4pass, Monsoon Xl, Gray (includes items 2 through 26)	1
2	1010434	Barrel - Plastic	11
3	1014902	U-Bolt	2
4	101705701	Decal, Warning	1
5	1017235	Bumper, Jounce	2
6	102296530	Screw - M6 X 1.0 X 30 Sems	4
7	102298720	Screw, M8-1.25x20, Taptite	12
8	102298745	M8-1.25x45 Taptite	8
9	102531001	Handrail Weldment, Rear Seat	1
10	102531402	Footdeck, 4-Passenger, Black	1
11	102531502	Cover- 4 Pass W/canopy	1
12	102534201	Bolt - Fl Hd, M8 X 95	4
13	102534801	Jounce Bumper Bracket	2
14	102541425	Bolt, M6x1.0x25, Hex Flhd, Blk-l	6
15	102573101	Bracket, 4-pass Lower Seat	2
16	102584701	Weld, 4-pass Footdeck-a	1
17	102584801	Weld, 4-pass Footdeck-b	1
18	103624601	Weldment, Spt, 4pass, Drv	1
19	103624602	Weldment, Spt, 4pass, Pas	1
20	103653001	Angle, Strut, Tie	1
21	103742303	Asm, Rear Leaf Spring, Prec, 4-Passenger	2
22	103853124	Service, Gray, Seatback Asm	1
23	103866901	Restraint-lh 4pass Hip	1
24	103866902	Restraint-rh 4pass Hip	1
25	103922401	Floormat, 4-pass, Rear	1
26	105101224	Service, Gray, 4pass Rear Btm	1

1

G

E

WHEELS AND TIRES

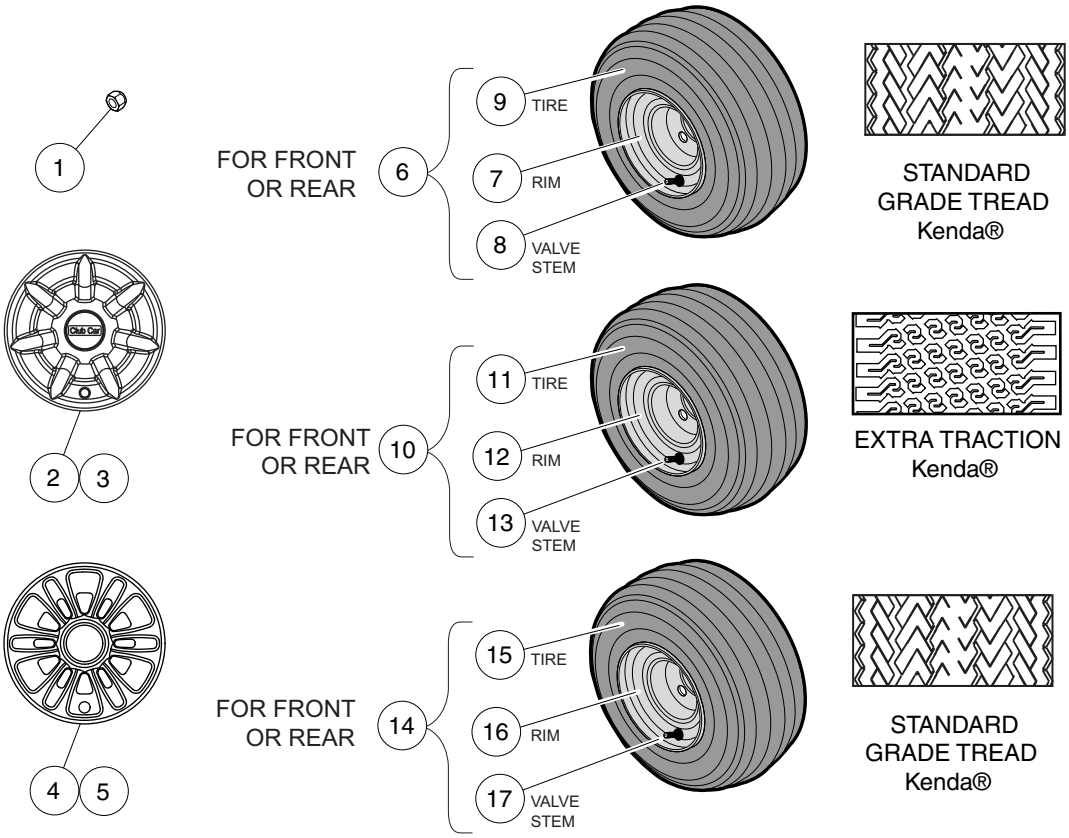
1
2
3
4
5
FOR FRONT OR REAR
6
9
TIRE
7
RIM
8
VALVE STEM
STANDARD GRADE TREAD Kenda®
FOR FRONT OR REAR
10
11
TIRE
12
RIM
13
VALVE STEM
EXTRA TRACTION Kenda®
FOR FRONT OR REAR
14
15
TIRE
16
RIM
17
VALVE STEM
STANDARD GRADE TREAD Kenda®

000474-010

WHEELS AND TIRES, I2 AND SIGNATURE

ITEM	PART NO.	DESCRIPTION	QTY
		1 2 3 4	
1	1010984	.500-20 Unf Lug Nut	16
2	102559901	Hub Cap Kit, Prec (includes item 3)	1
3	103694501	Hub Cap, 7 Prong	4
4	102559902	Kit, Wheel Cover, 12 Spk (includes item 5)	1
5	105142401	Wheel Cover, 12 Spk, 8", Slvr	4
6	103951001	Assembly, Silver Wheel Kenda, Hn1 4ply (includes items 7 through 9)	4
7	103459104	Wheel Rim, 8"x7", Silver, Std	1
8	7310	Valve Stem, Black Plastic	1
9	AM10682	Unmounted Prem Tire 18x8.50x8	1
10	103951002	Assembly, Silver Wheel Kenda, X/t 6ply (includes items 11 through 13)	4
11	102569302	Tire, Kenda, 18x8.5-8, 6-ply Xtr	1
12	103459104	Wheel Rim, 8"x7", Silver, Std	1
13	7310	Valve Stem, Black Plastic	1
14	103951007	Assembly, Silver Wheel Kenda, Radial (includes items 15 through 17)	4
15	102569311	Tire, Kenda, 18x8.5 R8, 4-ply	1
16	103459104	Wheel Rim, 8"x7", Silver, Std	1
17	7310	Valve Stem, Black Plastic	1

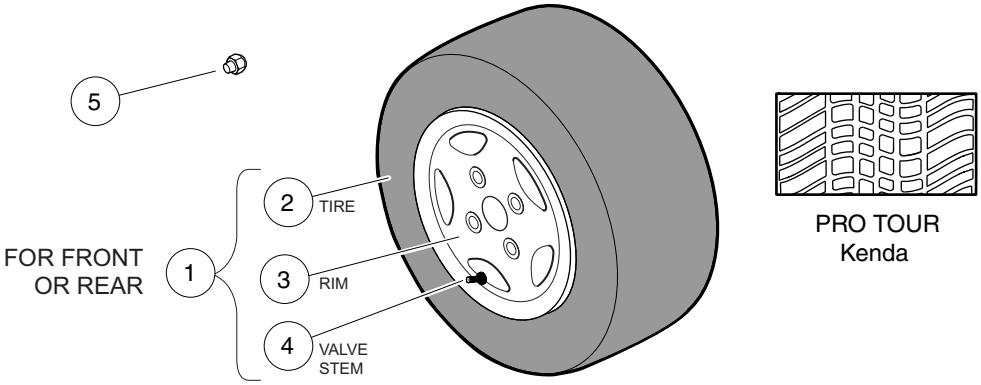
5
2
TIRE
FOR FRONT
OR REAR
1
3
RIM
4
VALVE
STEM
PRO TOUR
Kenda

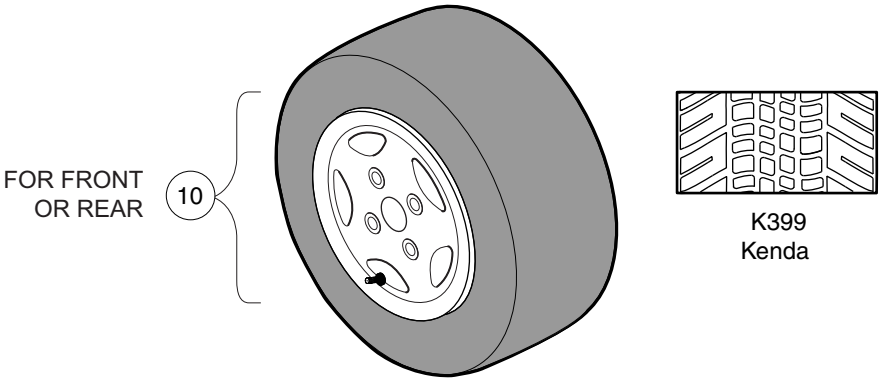
FOR FRONT
OR REAR
10
K399
Kenda

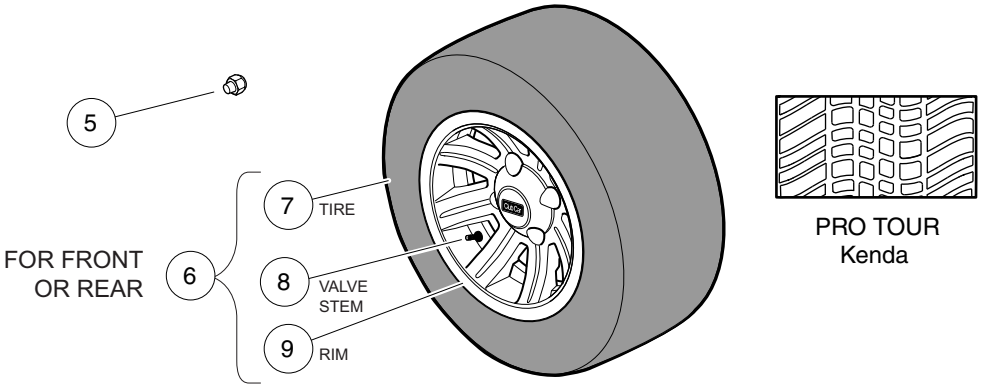
5
7
TIRE
FOR FRONT
OR REAR
6
8
VALVE
STEM
9
RIM
PRO TOUR
Kenda

000475-006

WHEELS AND TIRES – I2L AND I2L2

ITEM	PART NO.	DESCRIPTION	QTY
		1 2 3 4	
1	102540601	Tire and Wheel, 10" Aluminum, Pro Tour Tire (includes items 2 through 4)	4
2	102556701	Tire, Pro Tour, 205-50 X 10	1
3	102556801	Wheel, Aluminum, Champion	1
4	7310	Valve Stem, Black Plastic	1
5	102540701	Lug Nut, 1/2" Closed End	16
6	103935001	Tire and Wheel, 10", 8 Spoke, Alum. (includes items 7 through 9)	4
7	102556701	Tire, Pro Tour, 205-50 X 10	1
8	103832401	Valve Stem With Cap, Chrome	1
9	103934901	Wheel, Aluminum 10x6, 8 Spoke	1
10	AM1263401	Tire and Wheel, 10" Alum., Kenda K399 205/50 Tire	4

2

G

E

DECALS

IMPORTANT NOTICE

This vehicle does not conform to ANSI Z130.1 - "Standard for Golf Cars - Safety and Performance Requirements" because it is capable of speeds in excess of 15 miles per hour. Exercise caution.

CCI 102555901

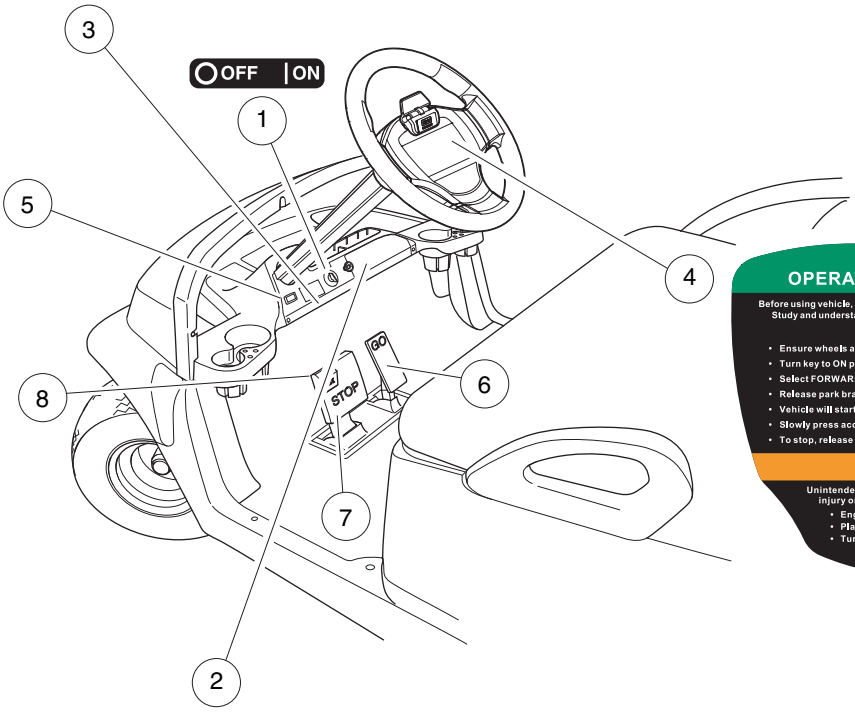

OPERATING INSTRUCTIONS

Before using vehicle, read owner's manual and vehicle safety warnings. Study and understand controls.

TO OPERATE

- Ensure wheels are turned in desired direction and path is clear.
- Turn key to ON position.
- Select FORWARD or REVERSE only when stopped.
- Release park brake fully.
- Vehicle will start moving when accelerator pedal is pressed.
- Slowly press accelerator pedal to increase speed.
- To stop, release accelerator pedal and press brake pedal.

WARNING

Unintended vehicle movement may cause severe injury or death. Before leaving vehicle:

- Engage park brake to lock wheels.
- Place vehicle in NEUTRAL.
- Turn key to OFF and remove key.

103783002

⚠ WARNING

ROLLOVER OR FALLING OFF MAY CAUSE SERIOUS INJURY OR DEATH.

- Before using vehicle, read operating instructions.
- Do not start vehicle until all occupants are seated.
- Keep entire body inside vehicle while moving.
- Drive slowly in turns and straight up and down slopes.
- Use brakes to reduce speed when coasting downhill.
- Never operate under the influence of alcohol or drugs.
- For use by authorized persons in designated areas only.
- Remain seated while moving.
- Operate from driver side only.
- Never operate on public roads.
- Hold on to seat handle while moving.
- Two (2) persons per seat maximum.
- Never stand in front of or behind vehicle.
- Do not leave children unattended on vehicle.

CCI 102519301

2546

DECALS – SUBARU EX40 GAS VEHICLE, PAGE 1 OF 3

ITEM	PART NO.	DESCRIPTION	QTY
		1 2 3 4	
1	101825101	Decal, Off/On	1
2	102519301	Decal, Warning, Rollover	1
3	102555901	Decal, Private Speed, Prec	1
4	103783002	Decal, Op Instr, Gas Ps	1

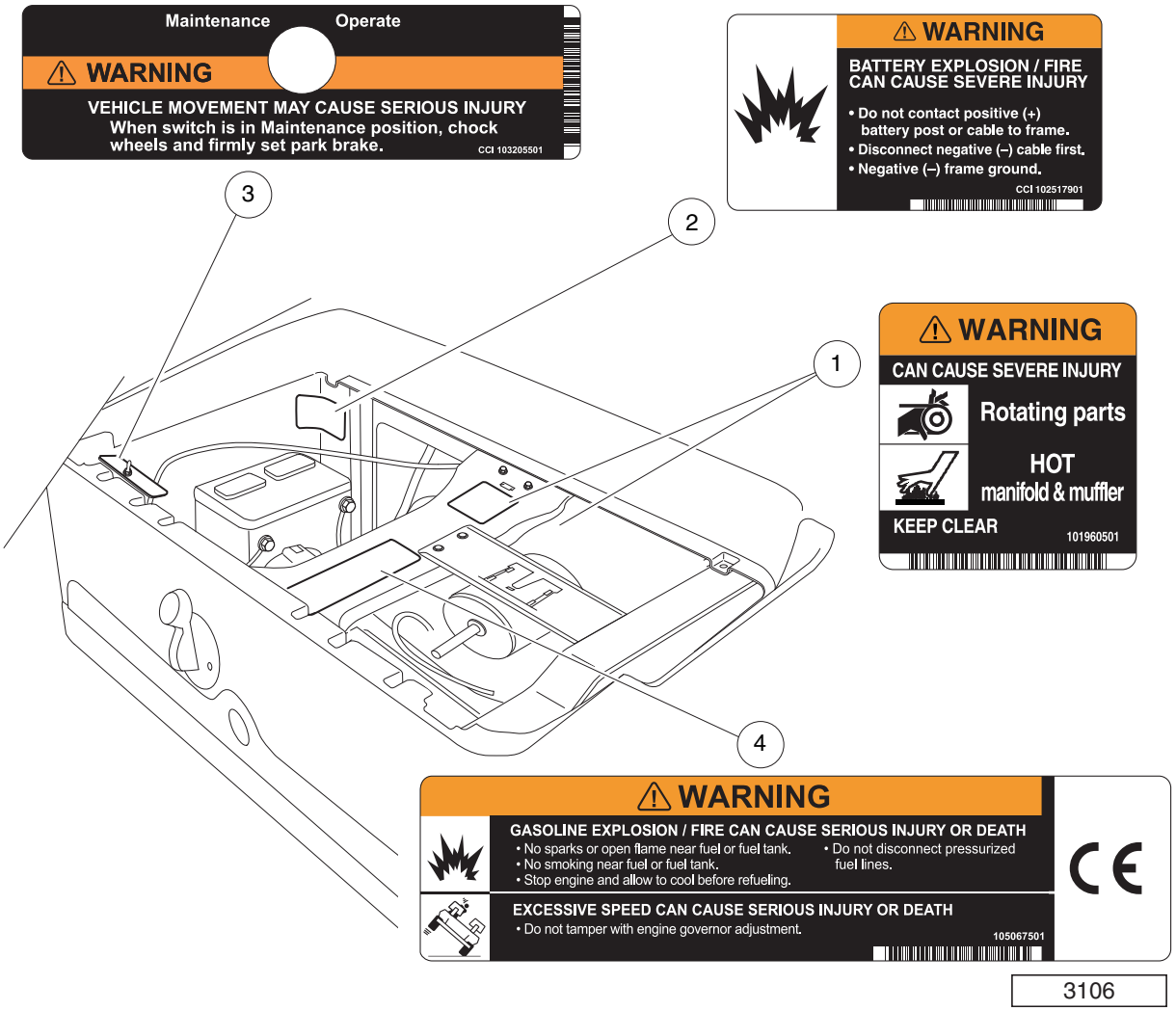
Maintenance
Operate
WARNING
VEHICLE MOVEMENT MAY CAUSE SERIOUS INJURY
When switch is in Maintenance position, chock wheels and firmly set park brake.
CCI 103205501
WARNING
BATTERY EXPLOSION / FIRE CAN CAUSE SEVERE INJURY
• Do not contact positive (+) battery post or cable to frame.
• Disconnect negative (–) cable first.
• Negative (–) frame ground.
CCI 102517901
WARNING
CAN CAUSE SEVERE INJURY
Rotating parts
HOT
manifold & muffler
KEEP CLEAR
101960501
WARNING
GASOLINE EXPLOSION / FIRE CAN CAUSE SERIOUS INJURY OR DEATH
• No sparks or open flame near fuel or fuel tank.
• No smoking near fuel or fuel tank.
• Stop engine and allow to cool before refueling.
• Do not disconnect pressurized fuel lines.
EXCESSIVE SPEED CAN CAUSE SERIOUS INJURY OR DEATH
• Do not tamper with engine governor adjustment.
105067501
CE
1
2
3
4

3106

DECALS – SUBARU EX40 GAS VEHICLE, PAGE 2 OF 3

ITEM	PART NO.	DESCRIPTION	QTY
		1 2 3 4	
1	101960501	Decal, Rotating Parts/Hot Manifold	2
2	102517901	Decal, Warning - Frame Ground	1
3	103205501	Decal, Run/Service Switch	1
4	105067501	Decal, Warn - Gas/gov Prec	1
		Note: Item 1 is located on bucket brace and starter/generator.	

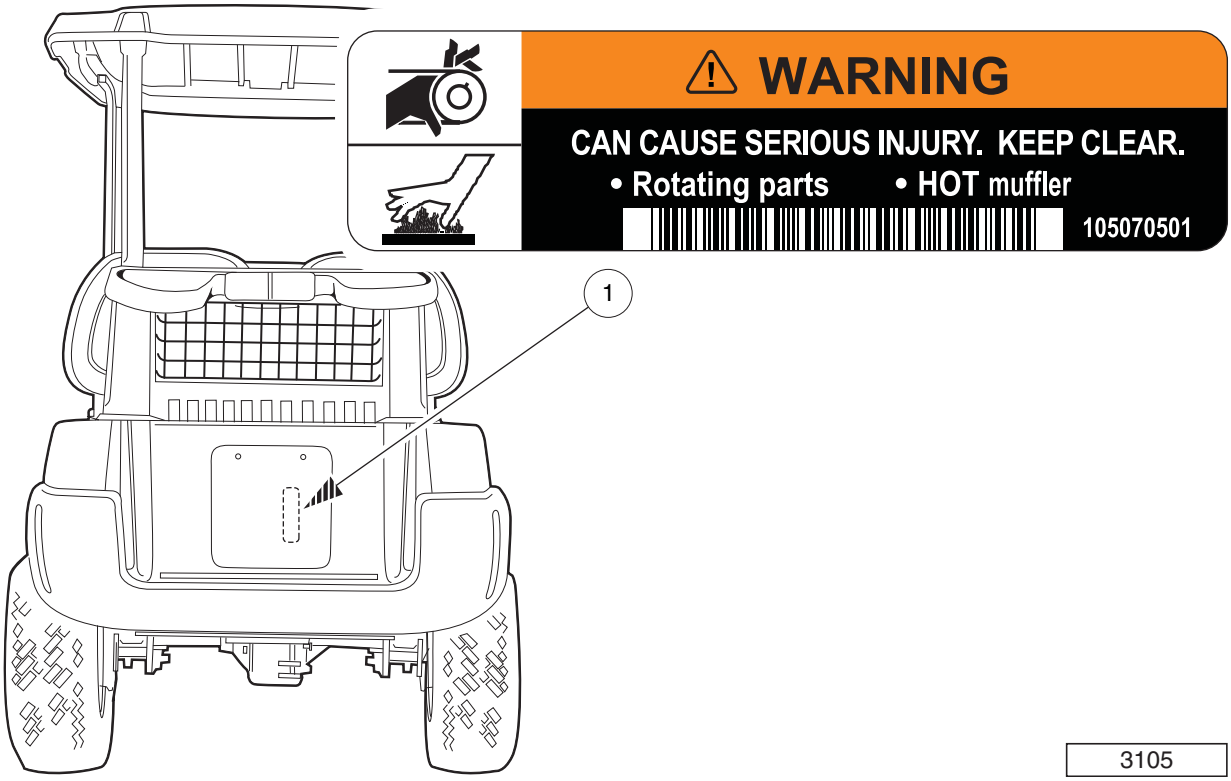
WARNING
CAN CAUSE SERIOUS INJURY. KEEP CLEAR.
• Rotating parts
• HOT muffler
105070501
1
3105

DECALS – SUBARU EX40 GAS VEHICLE, PAGE 3 OF 3

ITEM	PART NO.	DESCRIPTION	QTY
1	105070501	1 2 3 4 Decal, Gas, Rotating Parts/Hot Muffler, Precedent	1

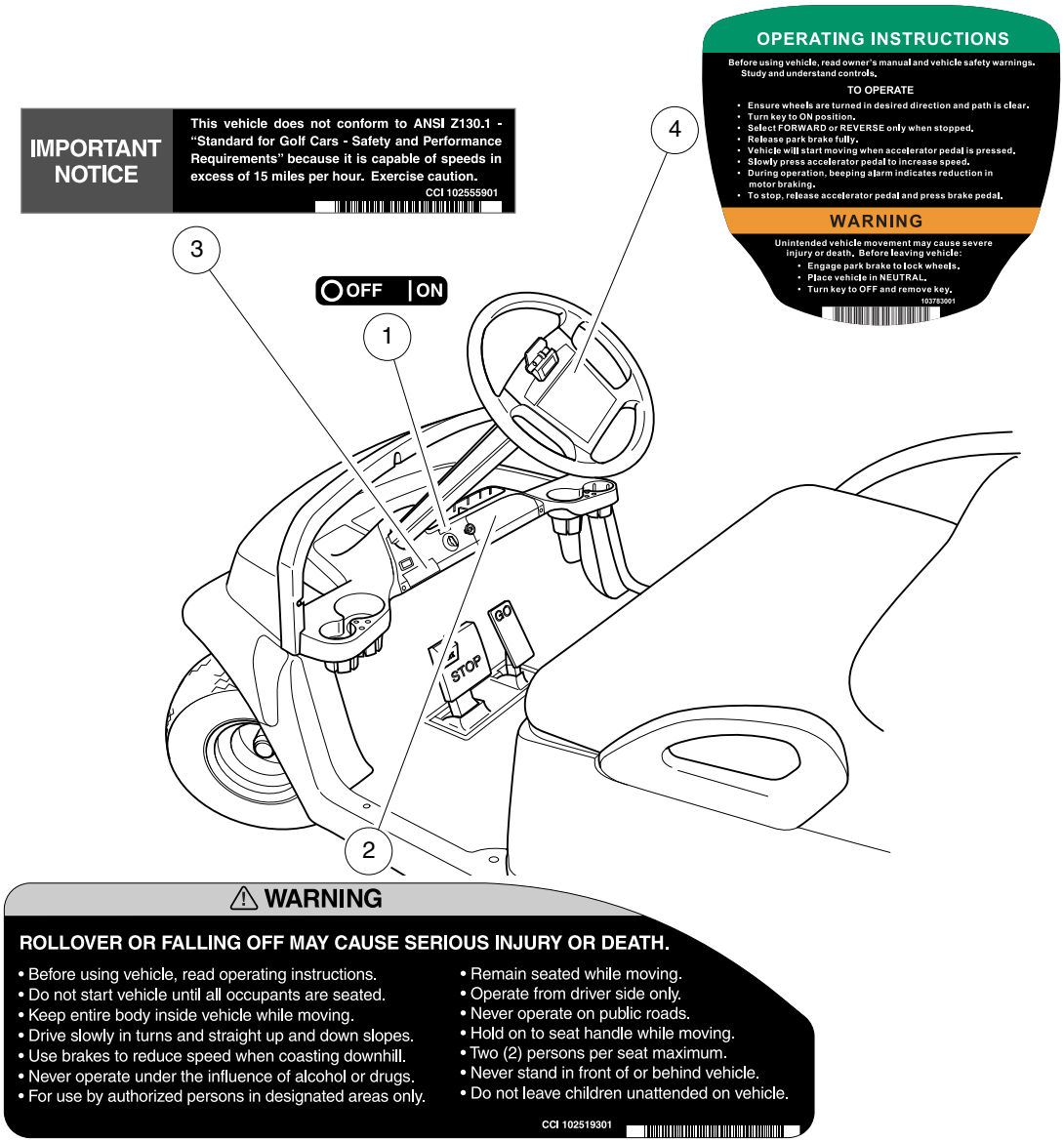

⚠ WARNING

ROLLOVER OR FALLING OFF MAY CAUSE SERIOUS INJURY OR DEATH.

- Before using vehicle, read operating instructions.
- Do not start vehicle until all occupants are seated.
- Keep entire body inside vehicle while moving.
- Drive slowly in turns and straight up and down slopes.
- Use brakes to reduce speed when coasting downhill.
- Never operate under the influence of alcohol or drugs.
- For use by authorized persons in designated areas only.
- Remain seated while moving.
- Operate from driver side only.
- Never operate on public roads.
- Hold on to seat handle while moving.
- Two (2) persons per seat maximum.
- Never stand in front of or behind vehicle.
- Do not leave children unattended on vehicle.

CCI 102519301

000441-010

DECALS – ELECTRIC VEHICLE, PAGE 1 OF 2

ITEM	PART NO.	DESCRIPTION	QTY
		1 2 3 4	
1	101825101	Decal, Off/On	1
2	102519301	Decal, Warning, Rollover	1
3	102555901	Decal, Private Speed, Prec	1
4	103783001	Decal, Op Instr, Ele	1

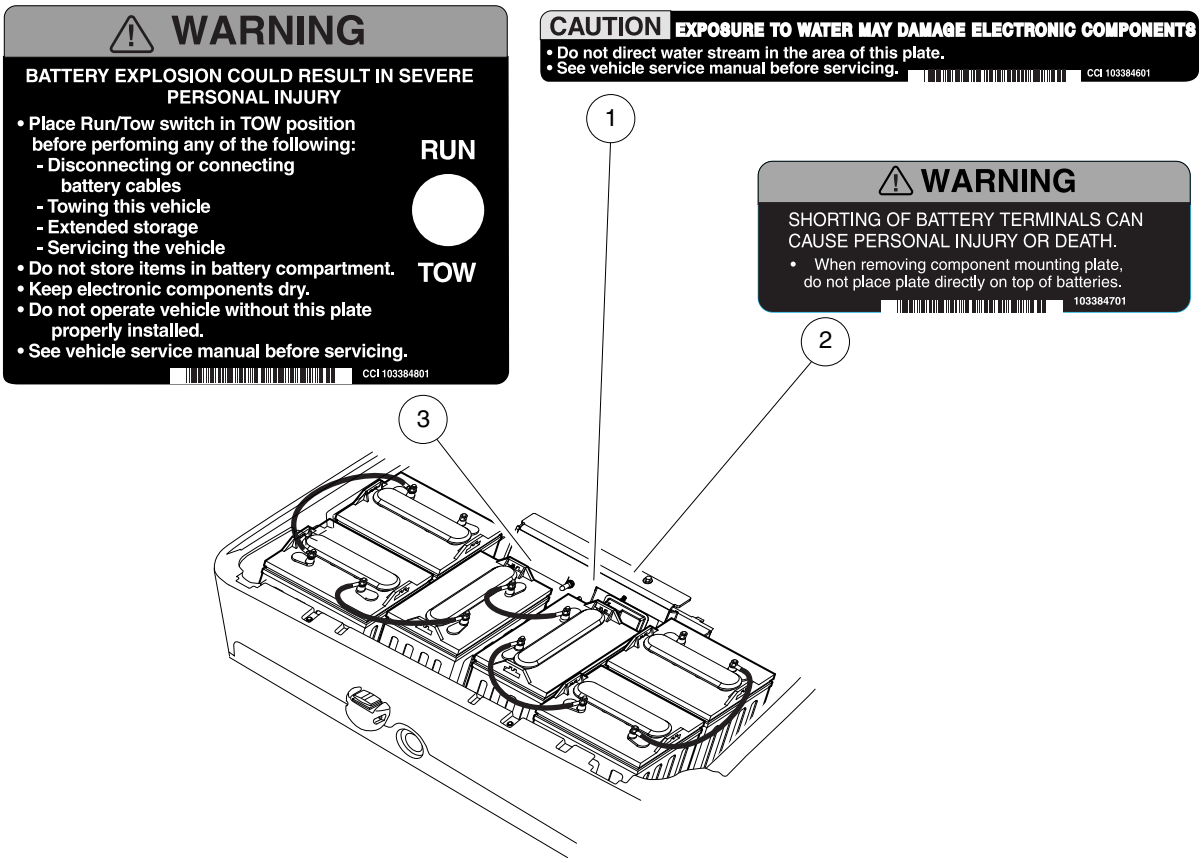
WARNING
BATTERY EXPLOSION COULD RESULT IN SEVERE PERSONAL INJURY
• Place Run/Tow switch in TOW position before perfoming any of the following:
- Disconnecting or connecting battery cables
- Towing this vehicle
- Extended storage
- Servicing the vehicle
• Do not store items in battery compartment.
• Keep electronic components dry.
• Do not operate vehicle without this plate properly installed.
• See vehicle service manual before servicing.
CCI 103384801
RUN
TOW
CAUTION
EXPOSURE TO WATER MAY DAMAGE ELECTRONIC COMPONENTS
• Do not direct water stream in the area of this plate.
• See vehicle service manual before servicing.
CCI 103384601
WARNING
SHORTING OF BATTERY TERMINALS CAN CAUSE PERSONAL INJURY OR DEATH.
• When removing component mounting plate, do not place plate directly on top of batteries.
103384701
1
2
3

000441-011

DECALS – ELECTRIC VEHICLE, PAGE 2 OF 2

ITEM	PART NO.	DESCRIPTION	QTY
		1 2 3 4	
1	103384601	Decal-water Exposure	1
2	103384701	Decal-warning, Short	1
3	103384801	Decal-warning, Run Tow	1

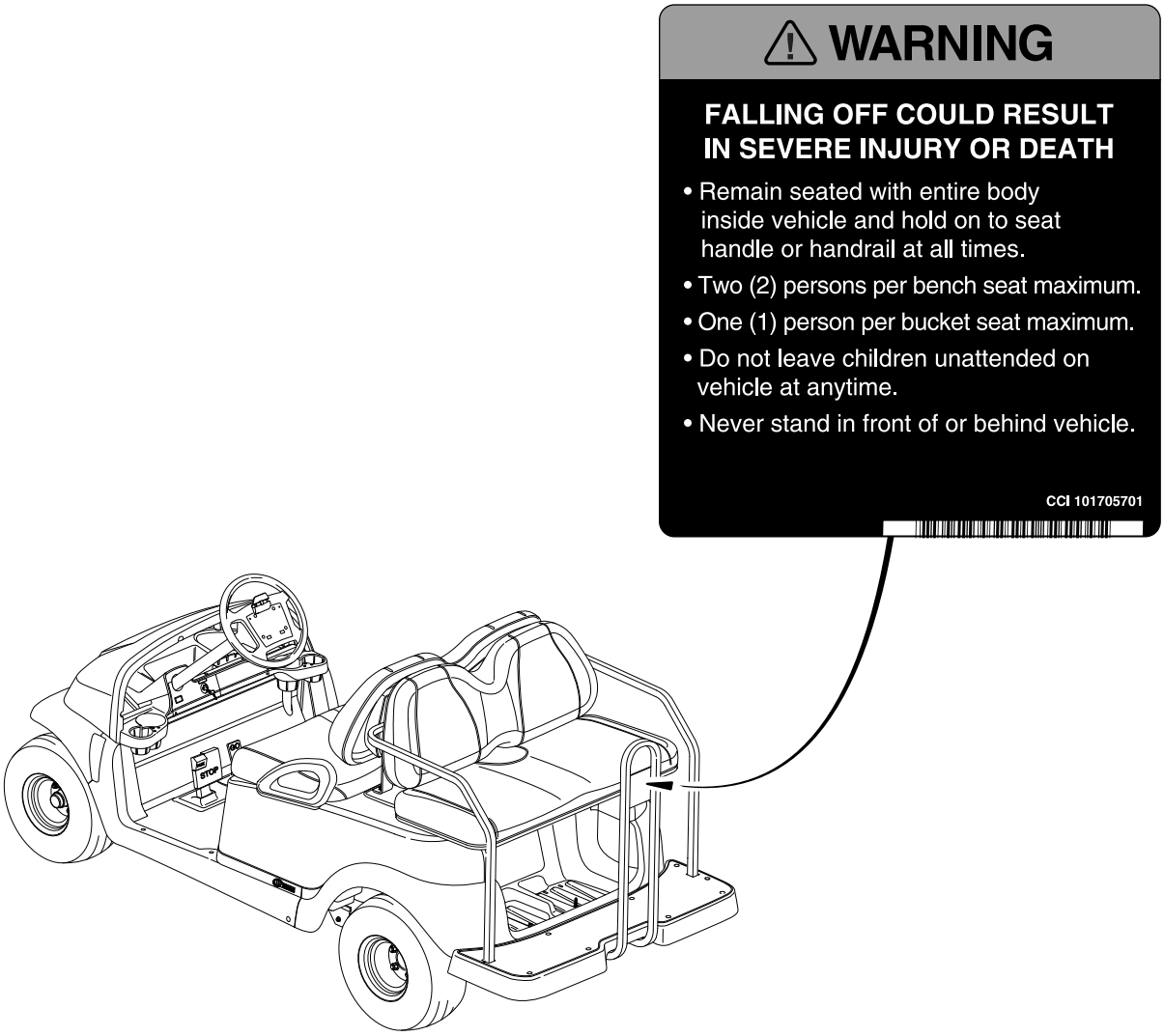
WARNING
FALLING OFF COULD RESULT IN SEVERE INJURY OR DEATH
• Remain seated with entire body inside vehicle and hold on to seat handle or handrail at all times.
• Two (2) persons per bench seat maximum.
• One (1) person per bucket seat maximum.
• Do not leave children unattended on vehicle at anytime.
• Never stand in front of or behind vehicle.
CCI 101705701
STOP

000495-001

DECAL – PRECEDENT VILLAGER 4

ITEM	PART NO.	DESCRIPTION	QTY
1	101705701	1 2 3 4 Decal, Warning	4

3

G

E

LIGHTS, CONTROLS AND INDICATORS

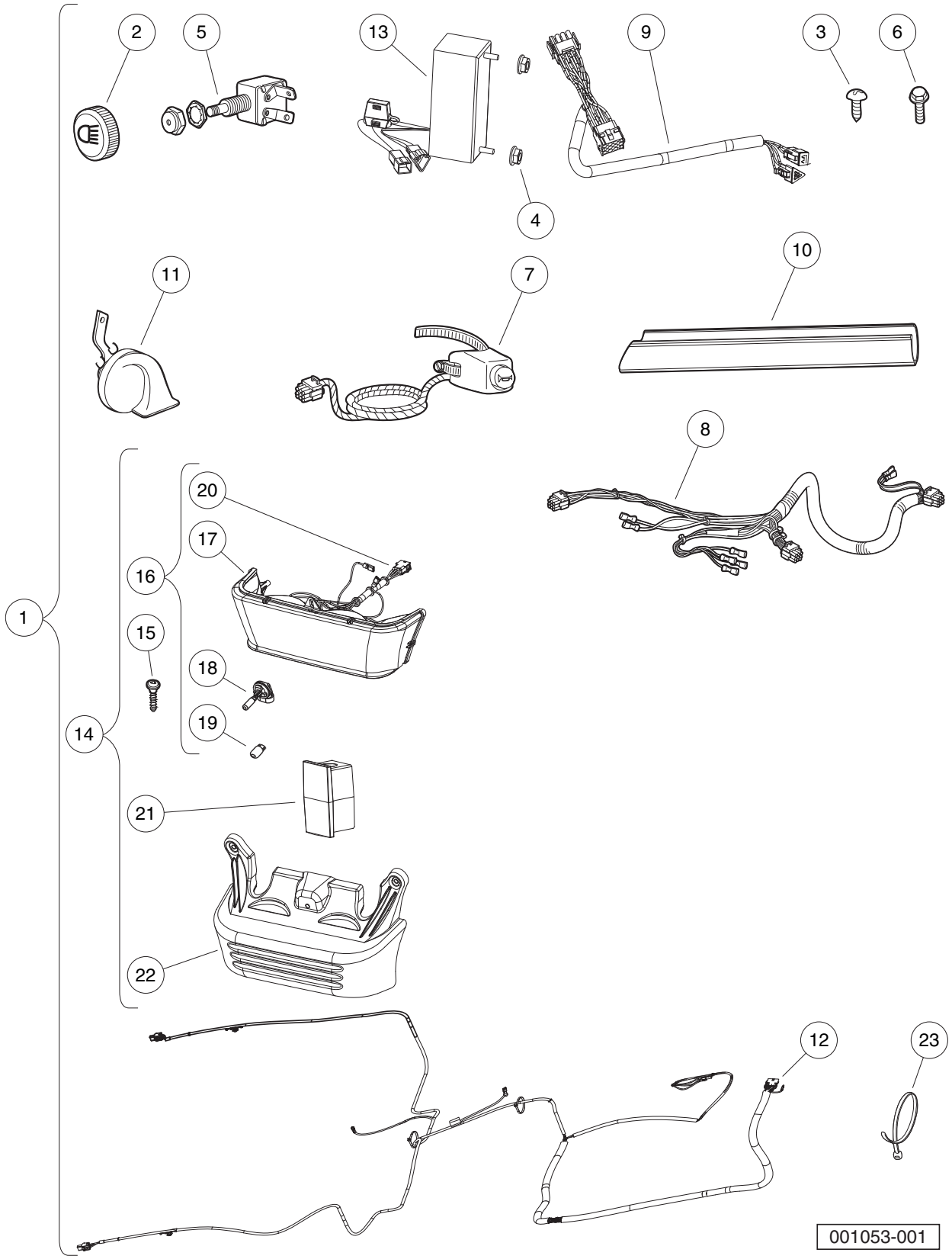
1
2
3
4
5
6
7
8
9
10
11
12
13
14
15
16
17
18
19
20
21
22
23
001053-001

HEADLIGHTS ONLY – PRECEDENT

ITEM	PART NO.	DESCRIPTION	QTY
		1 2 3 4	
1	105142601	Kit, Hdlts Only, Prec, Hfc (includes items 2 through 23)	1
2	1013857	Knob, Light Switch	1
3	1016849	Screw, #4-24 X 0.33, Pan-Head, Machine	2
4	101835601	Locknut, 1/4-20 Hex Whiz	2
5	102051901	Switch, Light	1
6	102298720	Screw, M8-1.25x20, Taptite	1
7	102517601	Subasm, Horn Button Harness	1
8	102527801	Ip Lighting Harness, Elec	1
9	102528101	Dc-dc Convert Harness, Prec	1
10	102529201	Wire Cover, Steering Column	1
11	102535401	Horn	1
12	103375901	Prec Light Harn Restyle	1
13	103700302	Converter, Dc/dc, Isoltd, Prec	1
14	103933902	Kit, Bumper W/light (includes items 15 through 22)	1
15	102296020	Screw, Torx Pan Hd Pt, M6 X 20	3
16	102544301	Headlight Asm, Prec (includes items 17 through 20)	1
17	102528701	Headlight, Lens/reflector	1
18	102535101	Bulb, Headlight, 37.5 W	2
19	102535201	Front Turn Signal Bulb	2
20	102535301	Headlight, Harness, Prec	1
21	103325001	Plug, Shock, Precedent Bumper	2
22	103923601	Bumper, Prec Fleet, W/light	1
23	8990	Tie Wrap, 8" Nylon	4

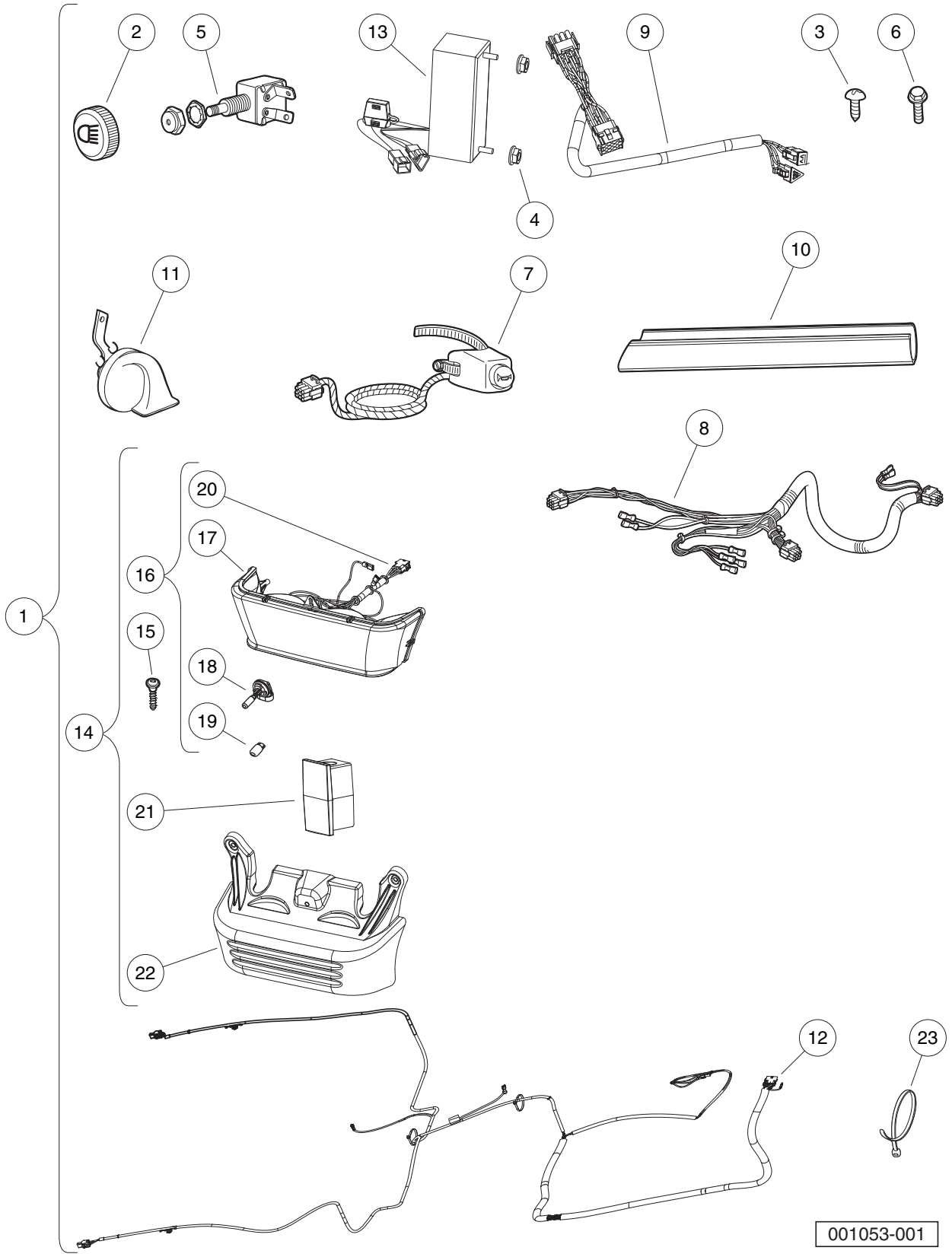
1
2
3
4
5
6
7
8
9
10
11
12
13
14
15
16
17
18
19
20
21
22
23
001053-001

HEADLIGHTS ONLY (CE) – PRECEDENT

ITEM	PART NO.	DESCRIPTION	QTY
		1 2 3 4	
1	105142602	Kit, Hdlts Only, Prec, Hfc, Ce (includes items 2 through 23)	1
2	1013857	Knob, Light Switch	1
3	1016849	Screw, #4-24 X 0.33, Pan-Head, Machine	2
4	101835601	Locknut, 1/4-20 Hex Whiz	2
5	102051901	Switch, Light	1
6	102298720	Screw, M8-1.25x20, Taptite	1
7	102517601	Subasm, Horn Button Harness	1
8	102527801	Ip Lighting Harness, Elec	1
9	102528101	Dc-dc Convert Harness, Prec	1
10	102529201	Wire Cover, Steering Column	1
11	102535401	Horn	1
12	103375901	Prec Light Harn Restyle	1
13	103802402	Converter, Dc/dc, Ce, Prec	1
14	103933902	Kit, Bumper W/light (includes items 15 through 22)	1
15	102296020	Screw, Torx Pan Hd Pt, M6 X 20	3
16	102544301	Headlight Asm, Prec (includes items 17 through 20)	1
17	102528701	Headlight, Lens/reflector	1
18	102535101	Bulb, Headlight, 37.5 W	2
19	102535201	Front Turn Signal Bulb	2
20	102535301	Headlight, Harness, Prec	1
21	103325001	Plug, Shock, Precedent Bumper	2
22	103923601	Bumper, Prec Fleet, W/light	1
23	8990	Tie Wrap, 8" Nylon	4

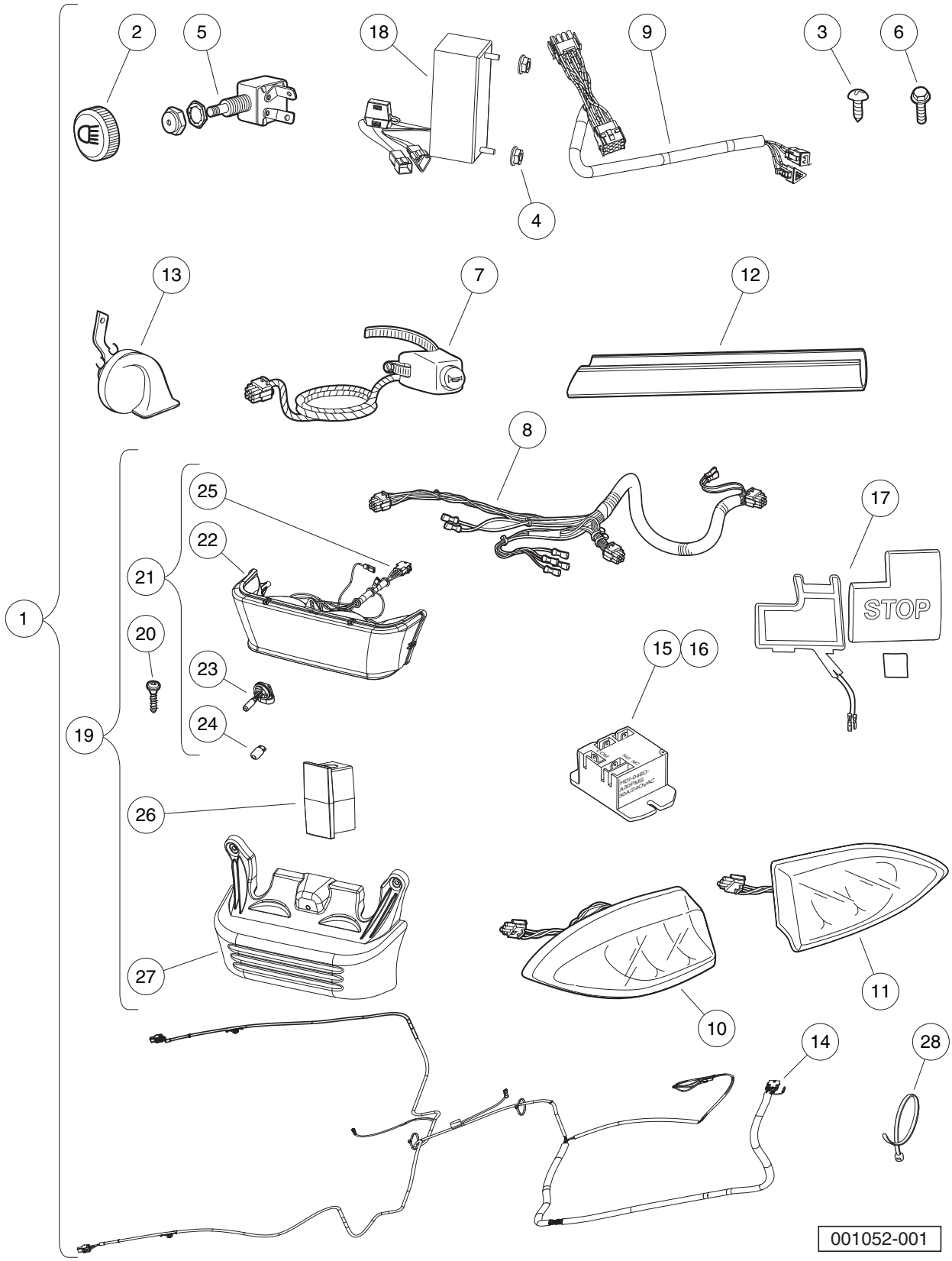
1
2
3
4
5
6
7
8
9
10
11
12
13
14
15
16
17
18
19
20
21
22
23
24
25
26
27
28
STOP
001052-001

HEADLIGHTS, HORN AND TAILLIGHTS – PRECEDENT

ITEM	PART NO.	DESCRIPTION	QTY
		1 2 3 4	
1	105142501	Kit, Std Lights, Prec, Hfc (includes items 2 through 28)	1
2	1013857	Knob, Light Switch	1
3	1016849	Screw, #4-24 X 0.33, Pan-Head, Machine	2
4	101835601	Locknut, 1/4-20 Hex Whiz	2
5	102051901	Switch, Light	1
6	102298720	Screw, M8-1.25x20, Taptite	1
7	102517601	Subasm, Horn Button Harness	1
8	102527801	Ip Lighting Harness, Elec	1
9	102528101	Dc-dc Convert Harness, Prec	1
10	102528901	Taillight Asm, Lh, Prec	1
11	102529001	Taillight Asm, Rh, Prec	1
12	102529201	Wire Cover, Steering Column	1
13	102535401	Horn	1
14	103375901	Prec Light Harn Restyle	1
15	103414901	Kit, Relay, 48v 30a W/instr (includes item 16)	1
16	103397901	Relay, Spst No, 48v 30a, Pmt	1
17	103597101	Kit, Brake Light Switch	1
18	103700302	Converter, Dc/dc, Isoltd, Prec	1
19	103933902	Kit, Bumper W/light (includes items 20 through 27)	1
20	102296020	Screw, Torx Pan Hd Pt, M6 X 20	3
21	102544301	Headlight Asm, Prec (includes items 22 through 25)	1
22	102528701	Headlight, Lens/reflector	1
23	102535101	Bulb, Headlight, 37.5 W	2
24	102535201	Front Turn Signal Bulb	2
25	102535301	Headlight, Harness, Prec	1
26	103325001	Plug, Shock, Precedent Bumper	2
27	103923601	Bumper, Prec Fleet, W/light	1
28	8990	Tie Wrap, 8" Nylon	4

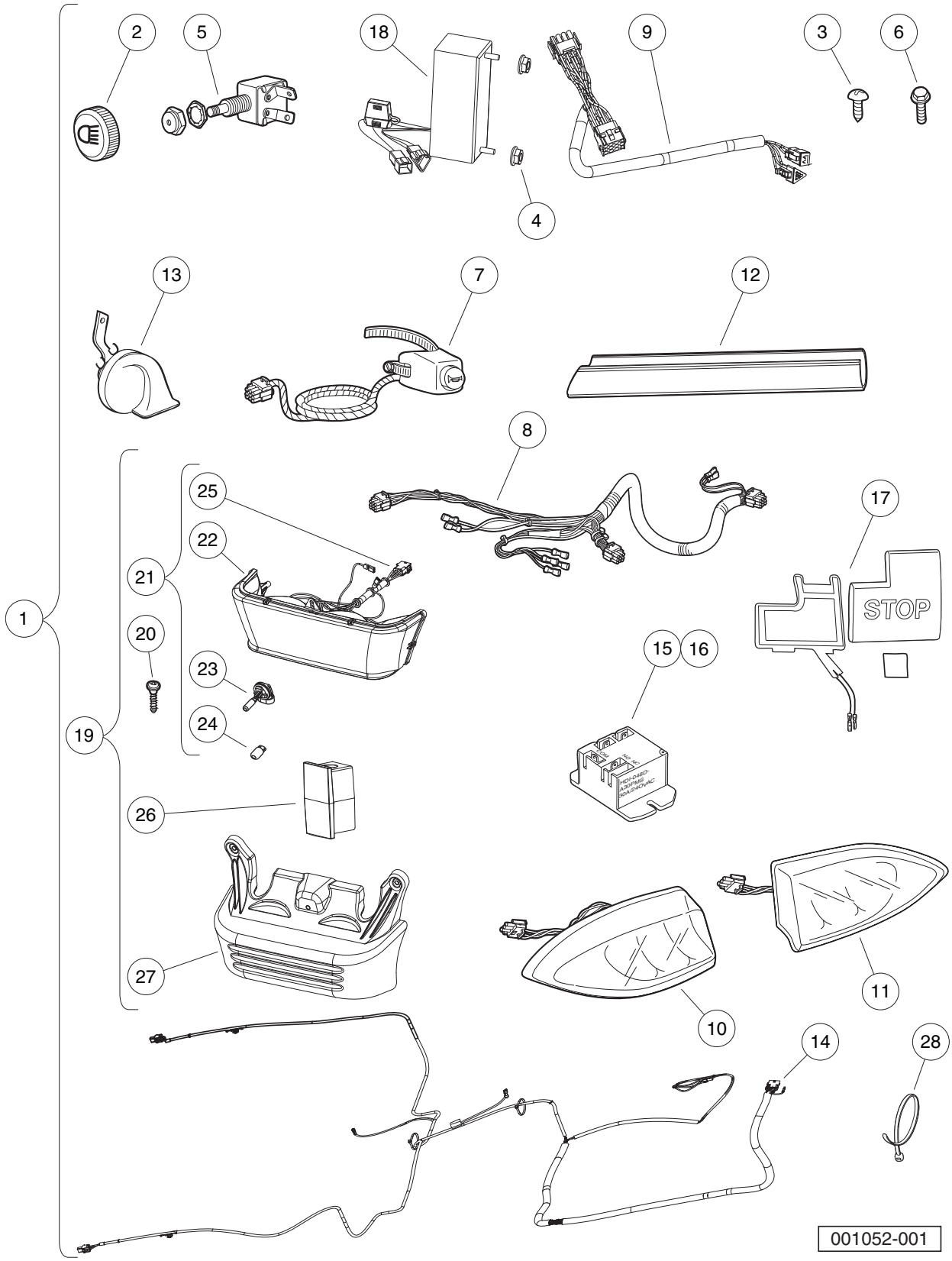
1
2
3
4
5
6
7
8
9
10
11
12
13
14
15
16
17
18
19
20
21
22
23
24
25
26
27
28
STOP
001052-001

HEADLIGHTS, HORN AND TAILLIGHTS (CE) – PRECEDENT

ITEM	PART NO.	DESCRIPTION	QTY
		1 2 3 4	
1	105142502	Kit, Std Lights, Prec, Hfc, Ce (includes items 2 through 28)	1
2	1013857	Knob, Light Switch	1
3	1016849	Screw, #4-24 X 0.33, Pan-Head, Machine	2
4	101835601	Locknut, 1/4-20 Hex Whiz	2
5	102051901	Switch, Light	1
6	102298720	Screw, M8-1.25x20, Taptite	1
7	102517601	Subasm, Horn Button Harness	1
8	102527801	Ip Lighting Harness, Elec	1
9	102528101	Dc-dc Convert Harness, Prec	1
10	102528901	Taillight Asm, Lh, Prec	1
11	102529001	Taillight Asm, Rh, Prec	1
12	102529201	Wire Cover, Steering Column	1
13	102535401	Horn	1
14	103375901	Prec Light Harn Restyle	1
15	103414901	Kit, Relay, 48v 30a W/instr (includes item 16)	1
16	103397901	Relay, Spst No, 48v 30a, Pmt	1
17	103597101	Kit, Brake Light Switch	1
18	103802402	Converter, Dc/dc, Ce, Prec	1
19	103933902	Kit, Bumper W/light (includes items 20 through 27)	1
20	102296020	Screw, Torx Pan Hd Pt, M6 X 20	3
21	102544301	Headlight Asm, Prec (includes items 22 through 25)	1
22	102528701	Headlight, Lens/reflector	1
23	102535101	Bulb, Headlight, 37.5 W	2
24	102535201	Front Turn Signal Bulb	2
25	102535301	Headlight, Harness, Prec	1
26	103325001	Plug, Shock, Precedent Bumper	2
27	103923601	Bumper, Prec Fleet, W/light	1
28	8990	Tie Wrap, 8" Nylon	4

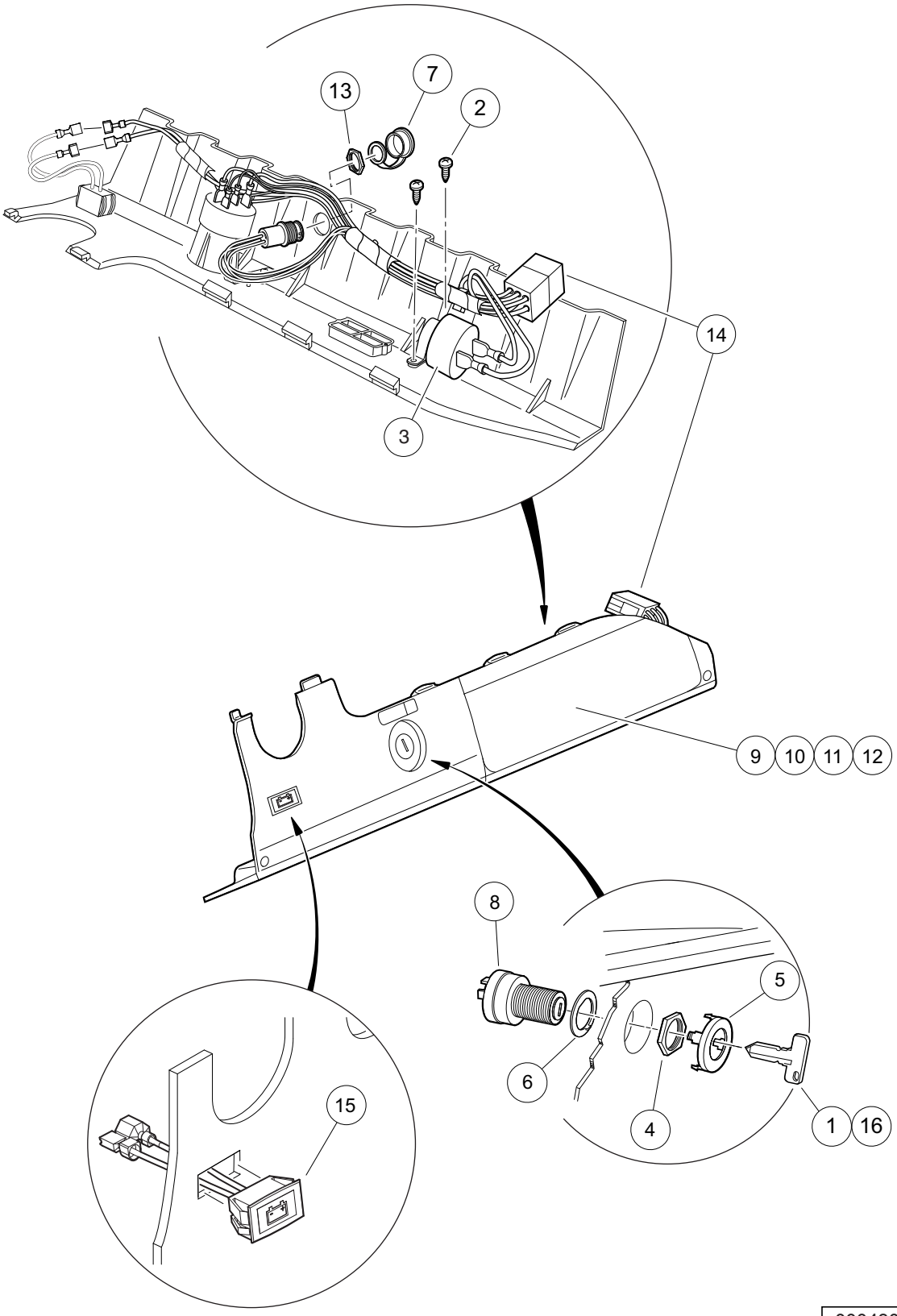

000490-004

INSTRUMENT PANEL – ELECTRIC VEHICLE WITH ERIC CHARGER

ITEM	PART NO.	DESCRIPTION	QTY
		1 2 3 4	
1	1012505	Keys (set of 2)	1
2	1016849	Screw, #4-24 X 0.33, Pan-Head, Machine	2
3	1016851	Buzzer, Reverse (9-48 VDC)	1
4	101830701	Nut, Key Switch	1
5	101834502	Cap, Black Key Switch	1
6	101851101	Washer, Key Switch	1
7	102196901	Dust Cap	1
8	102508601	Key Switch, Electric	1
9	102522901	Instrument Panel (standard)	1
10	102536601	Instrument Panel (with Hole for Headlight Switch)	1
11	102536603	Instrument Panel (with Hole for Battery Condition Indicator)	1
12	102536605	Instrument Panel (with Hole for Headlight Switch and Battery Condition Indicator)	1
13	102572401	Nut, Diagnostic Port, Prec	1
14	103991501	Harness, Wire, Instrument Panel, Prec w/Hi-Freq	1
15	105152301	Indicator, Charger, Dash, Cap	1
16	AM10079	Bulk Std Keys (50) *	1

* Note: Must order in multiples of 50.

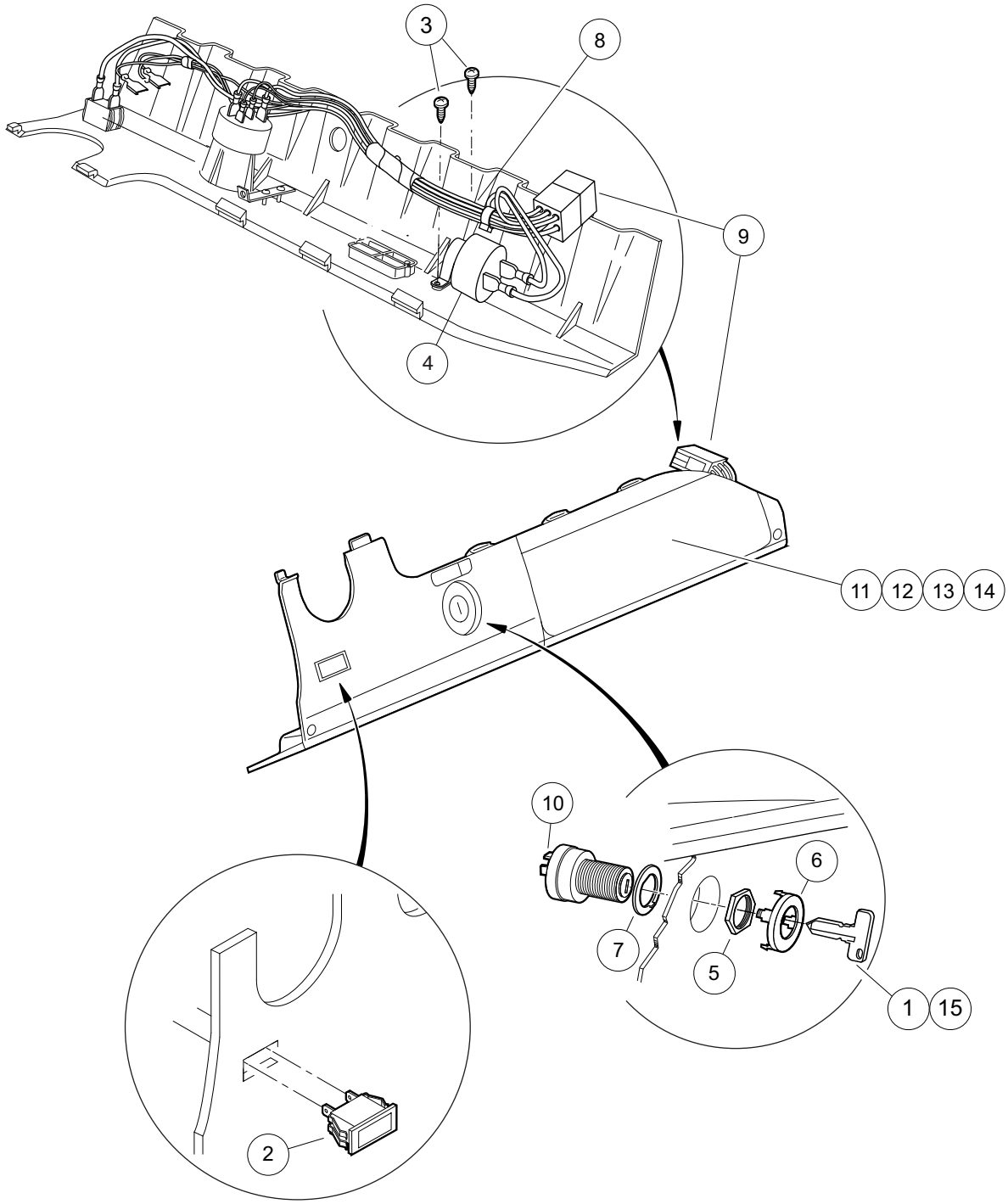

000490-003

INSTRUMENT PANEL – KAW. FE350 GAS VEHICLE

ITEM	PART NO.	DESCRIPTION	QTY
		1 2 3 4	
1	1012505	Keys (set of 2)	1
2	1016630	Light, Oil	1
3	1016849	Screw, #4-24 X 0.33, Pan-Head, Machine	2
4	1016851	Buzzer, Reverse (9-48 VDC)	1
5	101830701	Nut, Key Switch	1
6	101834502	Cap, Black Key Switch	1
7	101851101	Washer, Key Switch	1
8	102515001	Ip Control Harness, Gas (includes item 9)	1
9	N/A	Connector, Plug 9-pin	1
10	102515101	Key Switch, Gas, Prec	1
11	102522901	Instrument Panel (standard)	1
12	102536601	Instrument Panel (with Hole for Headlight Switch)	1
13	102536602	Instrument Panel (with Hole for Fuel Gauge)	1
14	102536604	Instrument Panel (with Hole for Headlight Switch and Fuel Gauge)	1
15	AM10079	Bulk Std Keys (50) *	1

* Note: Must order in multiples of 50.

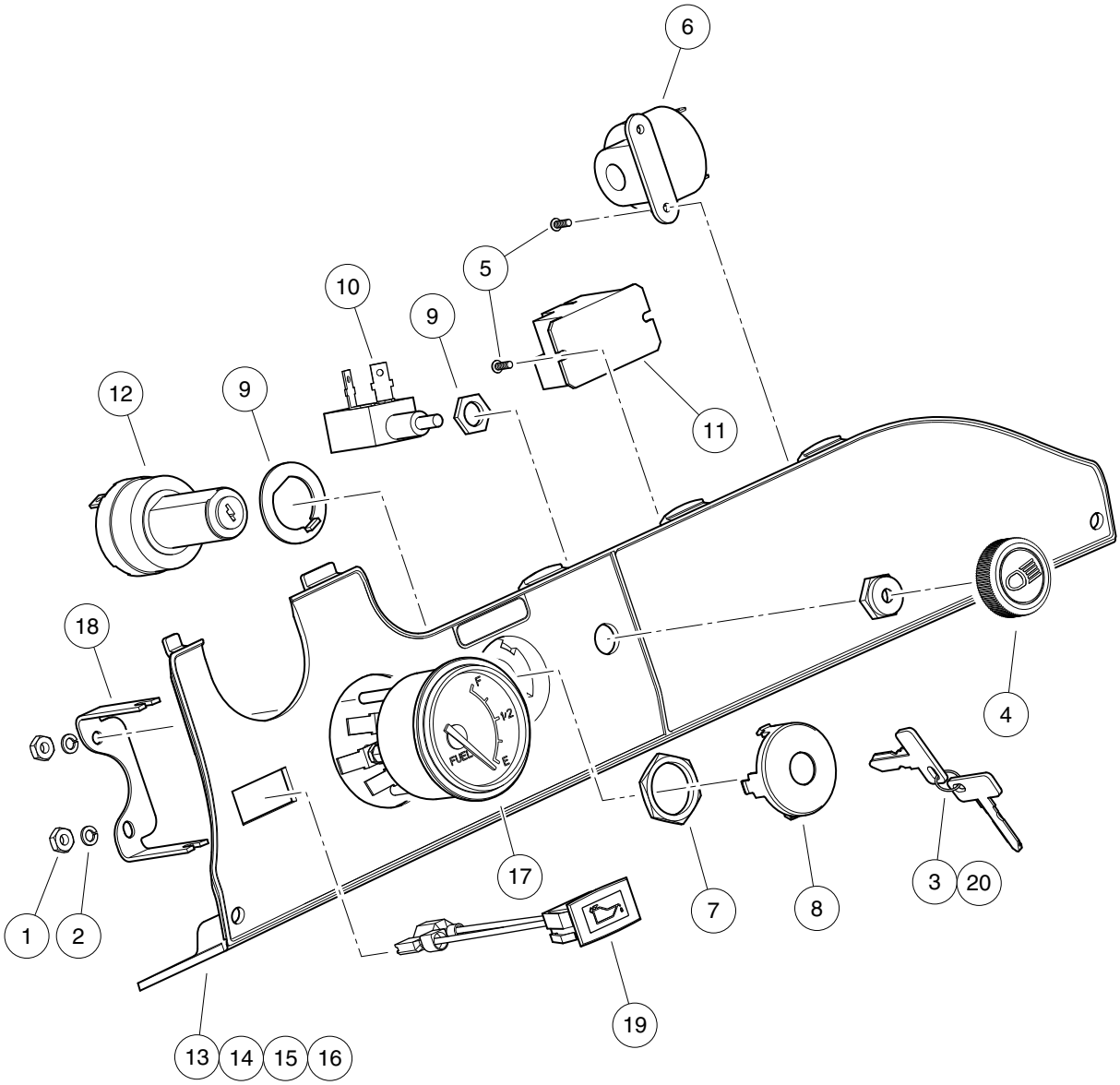

000986-001

INSTRUMENT PANEL – SUBARU EX40 GAS VEHICLE

ITEM	PART NO.	DESCRIPTION	QTY
		1 2 3 4	
1	1011571	Nut, #8-32 Hex	2
2	1011610	Lockwasher, #8 Split SS	2
3	1012505	Keys (set of 2)	1
4	1013857	Knob, Light Switch	1
5	1016849	Screw, #4-24 X 0.33, Pan-Head, Machine	4
6	1016851	Buzzer, Reverse (9-48 VDC)	1
7	101830701	Nut, Key Switch	1
8	101834502	Cap, Black Key Switch	1
9	101851101	Washer, Key Switch	1
10	102051901	Switch, Light	1
11	102199001	Relay, 12-Volt	1
12	102515101	Key Switch, Gas, Prec	1
13	102522901	Instrument Panel (standard)	1
14	102536601	Instrument Panel (with Hole for Headlight Switch)	1
15	102536602	Instrument Panel (with Hole for Fuel Gauge)	1
16	102536604	Instrument Panel (with Hole for Headlight Switch and Fuel Gauge)	1
17	103924301	Fuel Gauge, Prime	1
18	103924401	Bracket, Fuel Gauge, Prime	1
19	105037101	Light, Oil (LED)	1
20	AM10079	Bulk Std Keys (50) *	1

* Note: Must order in multiples of 50.

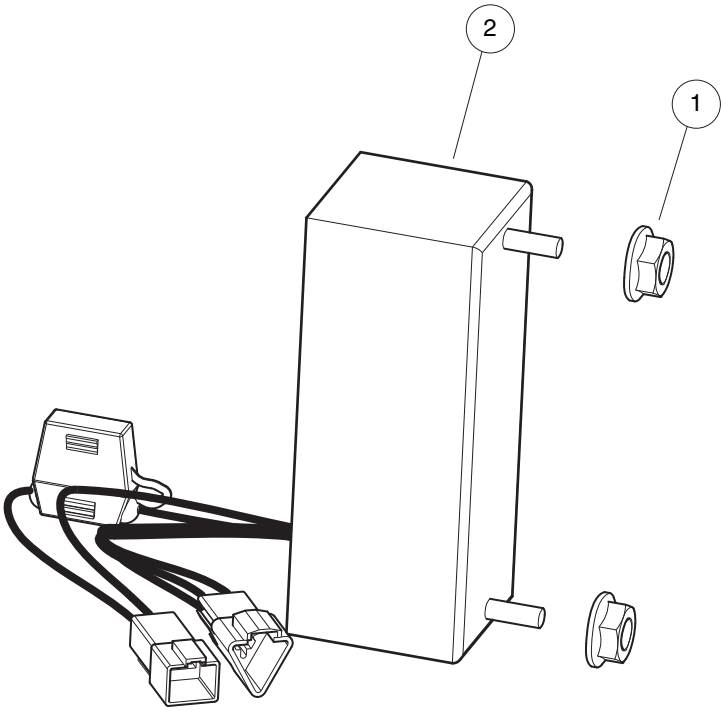

001054-001

DC CONVERTER (STANDARD) – ELECTRIC VEHICLE

ITEM	PART NO.	DESCRIPTION	QTY
		1 2 3 4	
1	101835601	Locknut, 1/4-20 Hex Whiz	2
2	103700302	Converter, Dc/dc, Isoltd, Prec	1

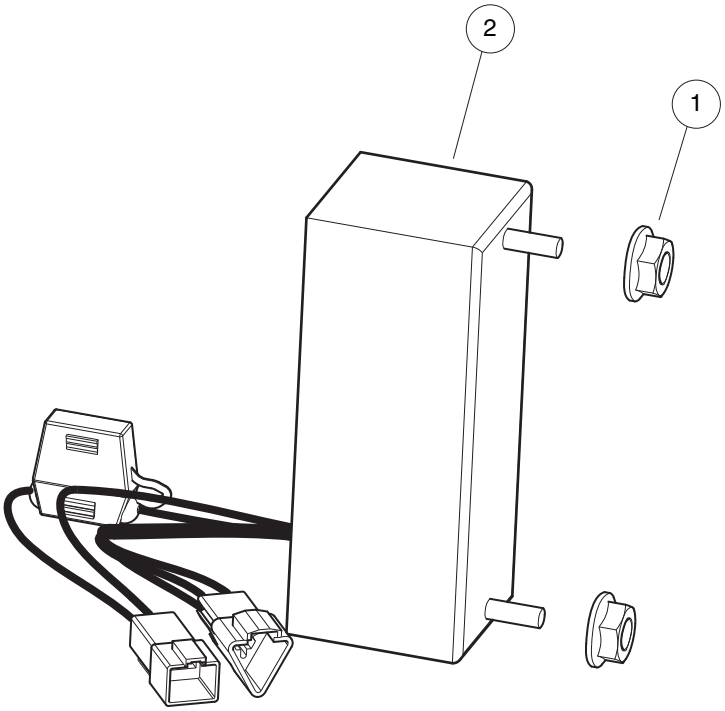

001054-001

DC CONVERTER (CE) – ELECTRIC VEHICLE

ITEM	PART NO.	DESCRIPTION	QTY
		1 2 3 4	
1	101835601	Locknut, 1/4-20 Hex Whiz	2
2	103802402	Converter, Dc/dc, Ce, Prec	1

4

G

E

BRAKES AND PEDAL GROUP ASSEMBLIES

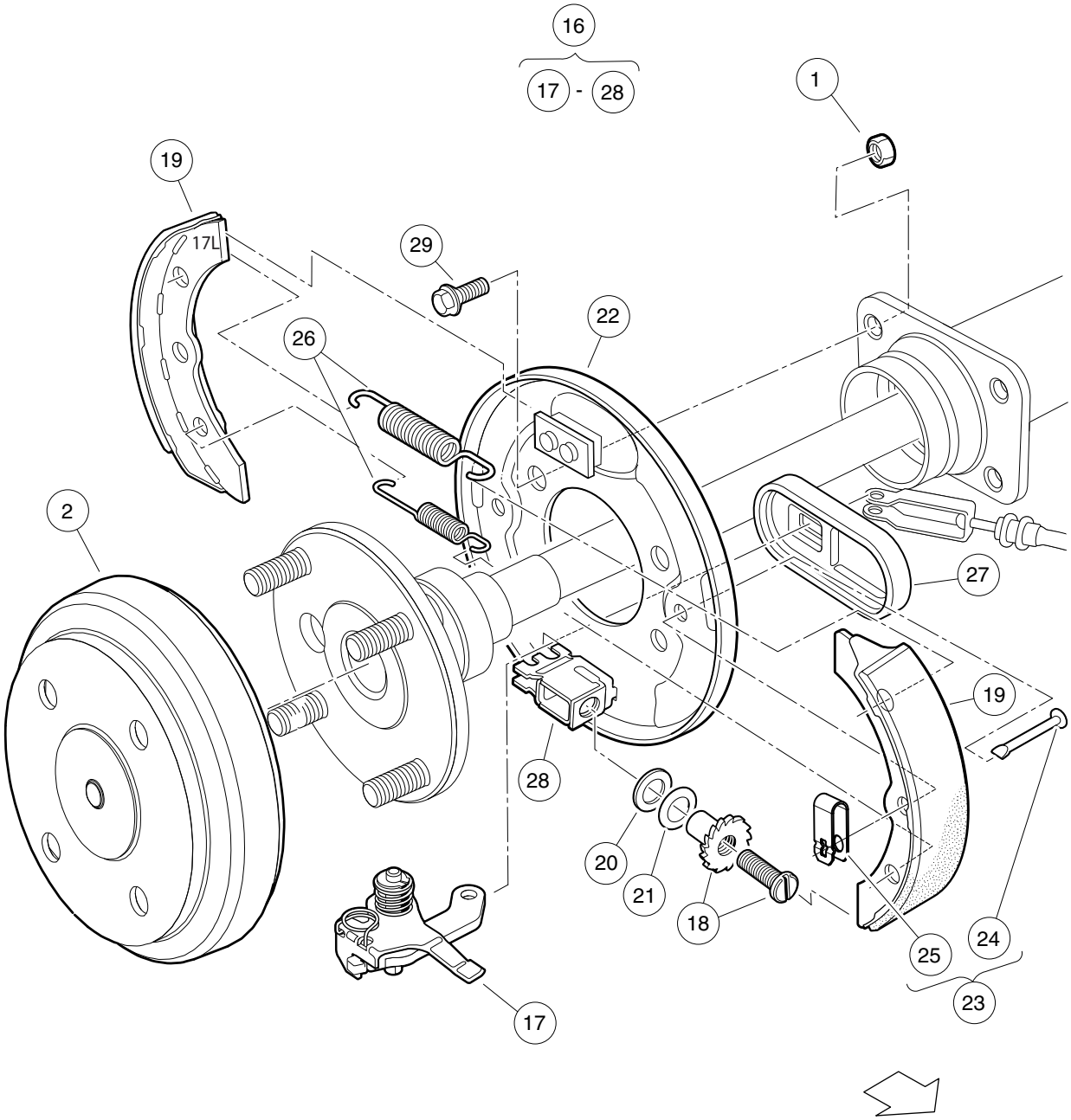

000186-006

REAR BRAKES, SELF-ADJUSTING – ELECTRIC VEHICLES

ITEM	PART NO.	DESCRIPTION	QTY
		1 2 3 4	
1	1013924	Nut, 5/16-24, Hex Head Cone	8
2	101791101	Drum without Center Hole, Brake	2
3	103380201	Asm, Brake Cluster, Mech, Drvr (includes items 4 through 15)	1
4	101815502	Lever Assembly, Self-Adjusting Brake, Left	1
5	101816502	Adjusting Mechanism, Self-Adjusting Brake, Left	1
6	101823201	Package, Brake Shoe, Self-Adjusting	1
7	101823801	Plate, Washer, Brake, Self-Adjusting	1
8	101823901	Washer, Brake, Self-Adjusting	1
9	103483102	Back Plate, Lh	1
10	103483201	Kit, Shoe Retainer (includes items 11 and 12)	1
11	N/A	Pin	2
12	N/A	Spring, Shoe, Clamp	2
13	103483401	Package Brake Spring Self Adj	1
14	103483601	Cover, Dust	1
15	103483701	Brake Block	1
16	103380202	Asm, Brake Cluster, Mech, Pass (includes items 17 through 28)	1
17	101815501	Lever Assembly, Self-Adjusting Brake, Right (Passenger)	1
18	101816501	Adj Mechanism, S.A. Brakes, Right (Passenger)	1
19	101823201	Package, Brake Shoe, Self-Adjusting	1
20	101823801	Plate, Washer, Brake, Self-Adjusting	1
21	101823901	Washer, Brake, Self-Adjusting	1
22	103483101	Back Plate, Rh	1
23	103483201	Kit, Shoe Retainer (includes items 24 and 25)	1
24	N/A	Pin	2
25	N/A	Spring, Shoe, Clamp	2
26	103483401	Package Brake Spring Self Adj	1
27	103483601	Cover, Dust	1
28	103483701	Brake Block	1
29	47542195001	Bolt, Brake Cluster Mnt	8

Note: Driver-side brake cluster not shown. Components have a similar appearance to passenger-side brake cluster components.

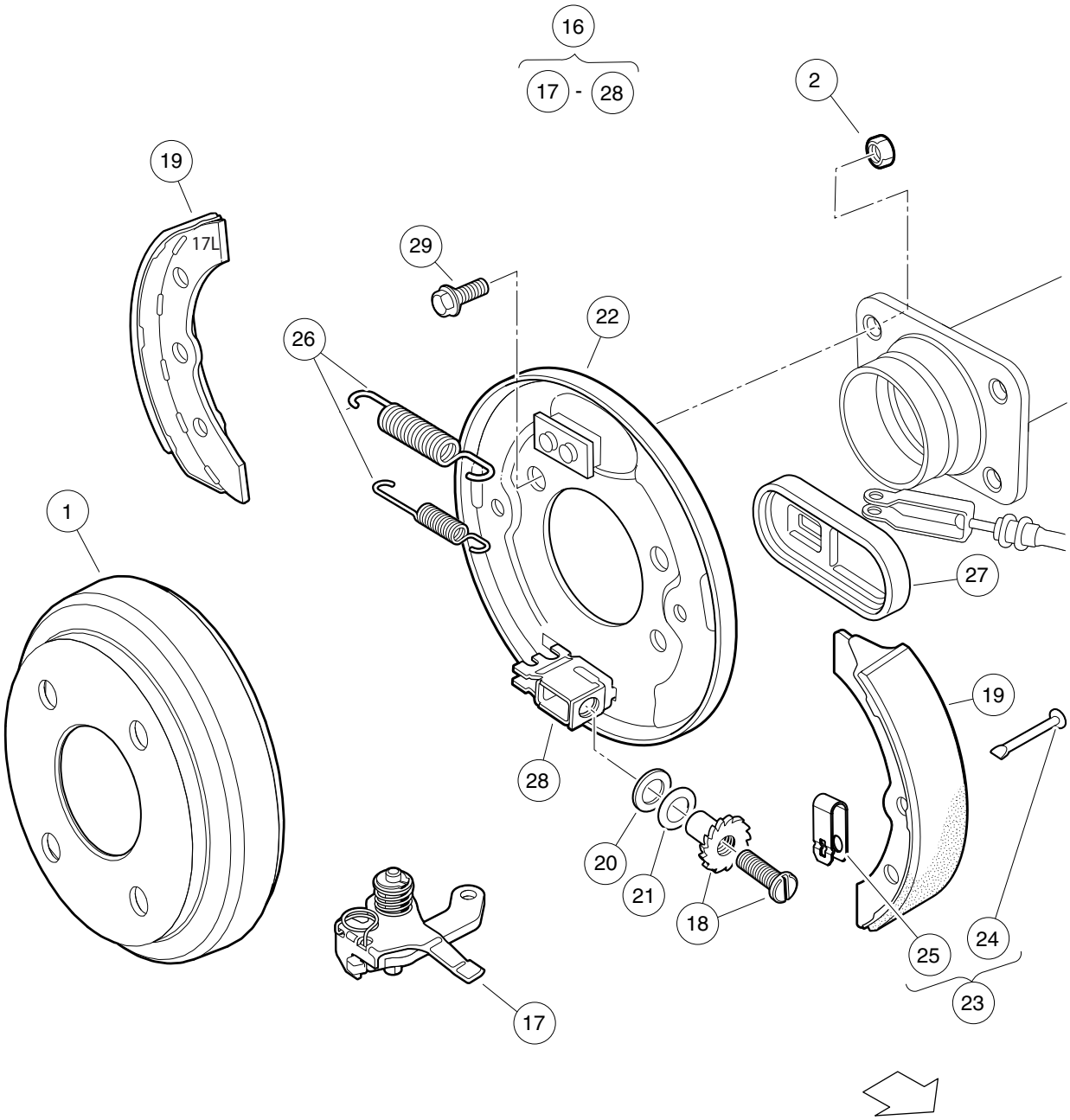

000186-007

REAR BRAKES, SELF-ADJUSTING – GASOLINE VEHICLES

ITEM	PART NO.	DESCRIPTION	QTY
		1 2 3 4	
1	1011137	Drum, Brake	2
2	1013924	Nut, 5/16-24, Hex Head Cone	8
3	103380201	Asm, Brake Cluster, Mech, Drvr (includes items 4 through 15)	1
4	101815502	Lever Assembly, Self-Adjusting Brake, Left	1
5	101816502	Adjusting Mechanism, Self-Adjusting Brake, Left	1
6	101823201	Package, Brake Shoe, Self-Adjusting	1
7	101823801	Plate, Washer, Brake, Self-Adjusting	1
8	101823901	Washer, Brake, Self-Adjusting	1
9	103483102	Back Plate, Lh	1
10	103483201	Kit, Shoe Retainer (includes items 11 and 12)	1
11	N/A	Pin	2
12	N/A	Spring, Shoe, Clamp	2
13	103483401	Package Brake Spring Self Adj	1
14	103483601	Cover, Dust	1
15	103483701	Brake Block	1
16	103380202	Asm, Brake Cluster, Mech, Pass (includes items 17 through 28)	1
17	101815501	Lever Assembly, Self-Adjusting Brake, Right (Passenger)	1
18	101816501	Adj Mechanism, S.A. Brakes, Right (Passenger)	1
19	101823201	Package, Brake Shoe, Self-Adjusting	1
20	101823801	Plate, Washer, Brake, Self-Adjusting	1
21	101823901	Washer, Brake, Self-Adjusting	1
22	103483101	Back Plate, Rh	1
23	103483201	Kit, Shoe Retainer (includes items 24 and 25)	1
24	N/A	Pin	2
25	N/A	Spring, Shoe, Clamp	2
26	103483401	Package Brake Spring Self Adj	1
27	103483601	Cover, Dust	1
28	103483701	Brake Block	1
29	47542195001	Bolt, Brake Cluster Mnt	8

Note: Driver-side brake cluster not shown. Components have a similar appearance to passenger-side brake cluster components.

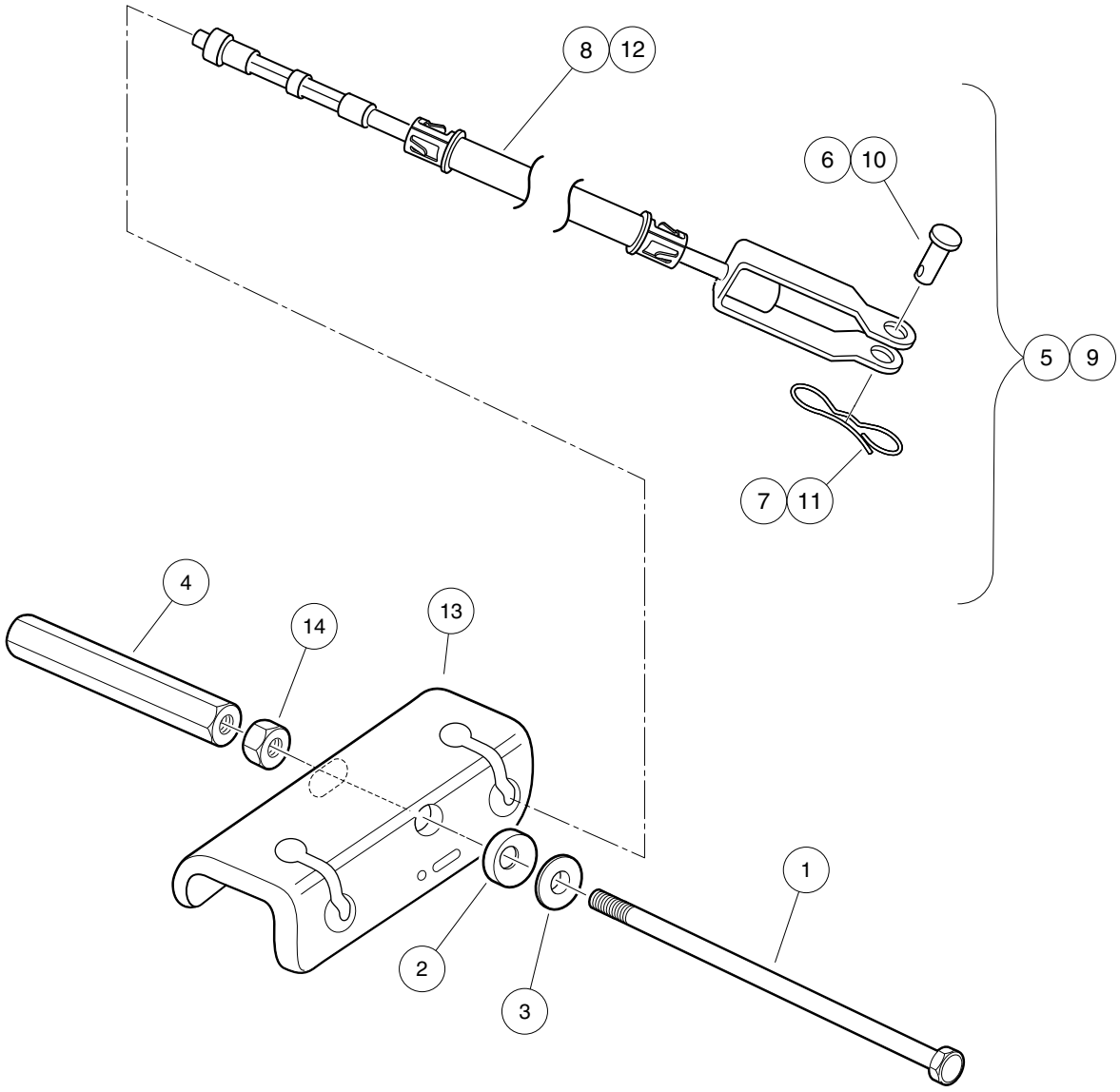

000467-006

BRAKE CABLES AND EQUALIZER BRACKET

ITEM	PART NO.	DESCRIPTION	QTY
		1 2 3 4	
1	102297901	Bolt, 5/16-18 X 7.375, Hex	1
2	102551901	Washer, 5/16, Self Comp, Cup	1
3	102552001	Washer, 5/16, Self Comp, Cone	1
4	102594301	Nut, 5/16-18, Hex Adjusting -l	1
5	103528701	Kit, Brake Cable, Prec, Rh (includes items 6 through 8)	1
6	1010829	Pin, Clevis, 5/16 X 3/4	1
7	102292801	Pin, Bow Tie Locking - .072	1
8	N/A	Cable, Brake, Prec, Right	1
9	103528702	Kit, Brake Cable, Prec, Lh (includes items 10 through 12)	1
10	1010829	Pin, Clevis, 5/16 X 3/4	1
11	102292801	Pin, Bow Tie Locking - .072	1
12	N/A	Cable, Brake, Prec, Left	1
13	103535001	Bracket, Equalizer, Prec Awd	1
14	1242	Nut, 5/16-18 Hex	1

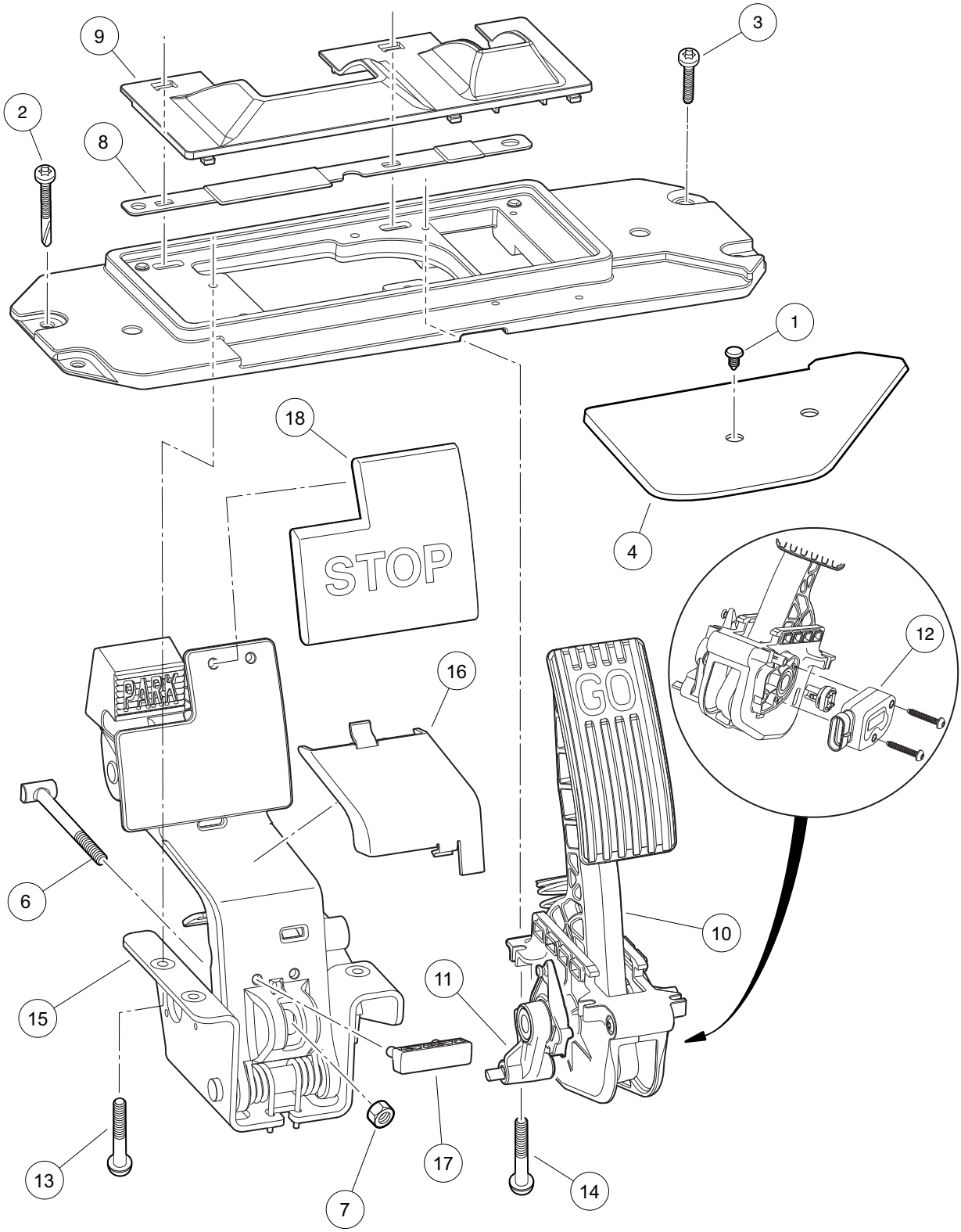

000487-015

PEDAL GROUP WITH SENSOR – GASOLINE VEHICLE

ITEM	PART NO.	DESCRIPTION	QTY
		1 2 3 4	
1	1010434	Barrel - Plastic	1
2	102292201	Screw-1/4-20x2.20 Tx Pn Hd Sd	2
3	102298030	Screw, K80x30, Torx Pn Hd Pt	2
4	102500801	Plate - Floor Cover	1
5	103974815	Asm, Pedal Set, Anodized, Service, Gas Vehicle (includes items 6 through 15)	1
6	102559401	Rod, Brake	1
7	102559701	Nut, Brake Rod	1
8	102594801	Shield, Debris Aux	1
9	102594901	Shield, Debris Primary	1
10	102595502	Asm, Accel. Pedal/Throttle, Anodized, Gas Vehicle (includes items 11 and 12)	1
11	103777601	Asm, Park Brake Release, Anodized	1
12	N/A	Throttle Sensor	1
13	102595901	Screw, M6x1.0x17 Ph, Taptite	4
14	102596001	Screw, M5x0.8x18 Ph, Taptite	4
15	103974901	Asm, Brake Pedal, Anodized (includes items 16 through 18)	1
16	102595201	Cover, Brake	1
17	102595301	Upstop, Brake	1
18	102595401	Pad, Brake	1

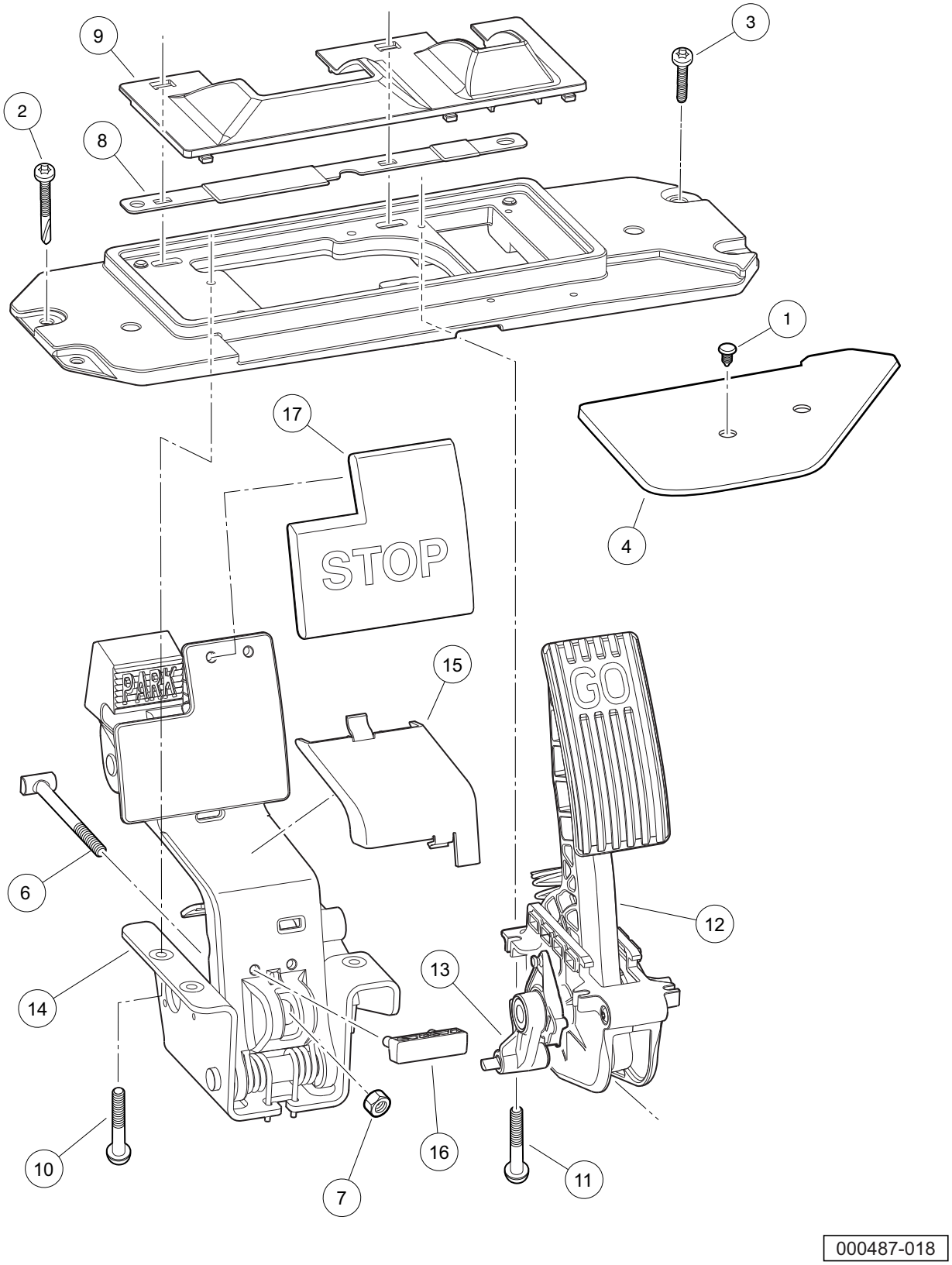
9
3
2
8
1
17
STOP
4
PARK
15
GO
6
12
13
14
16
10
7
11
000487-018

PEDAL GROUP W/O SENSOR, GASOLINE VEHICLE

ITEM	PART NO.	DESCRIPTION	QTY
		1 2 3 4	
1	1010434	Barrel - Plastic	1
2	102292201	Screw-1/4-20x2.20 Tx Pn Hd Sd	2
3	102298030	Screw, K80x30, Torx Pn Hd Pt	2
4	102500801	Plate - Floor Cover	1
5	103974821	Asm, Pedal, Anodized, Field Service, Gas or Elec (includes items 6 through 14)	1
6	102559401	Rod, Brake	1
7	102559701	Nut, Brake Rod	1
8	102594801	Shield, Debris Aux	1
9	102594901	Shield, Debris Primary	1
10	102595901	Screw, M6x1.0x17 Ph, Taptite	4
11	102596001	Screw, M5x0.8x18 Ph, Taptite	4
12	102596301	Pedal, Accelerator, Anodized, Gas or Elec (includes item 13)	1
13	103777601	Asm, Park Brake Release, Anodized	1
14	103974901	Asm, Brake Pedal, Anodized (includes items 15 through 17)	1
15	102595201	Cover, Brake	1
16	102595301	Upstop, Brake	1
17	102595401	Pad, Brake	1

Note: Pedal Assembly (item 5) has no sensor and is common to both gas and electric vehicles.

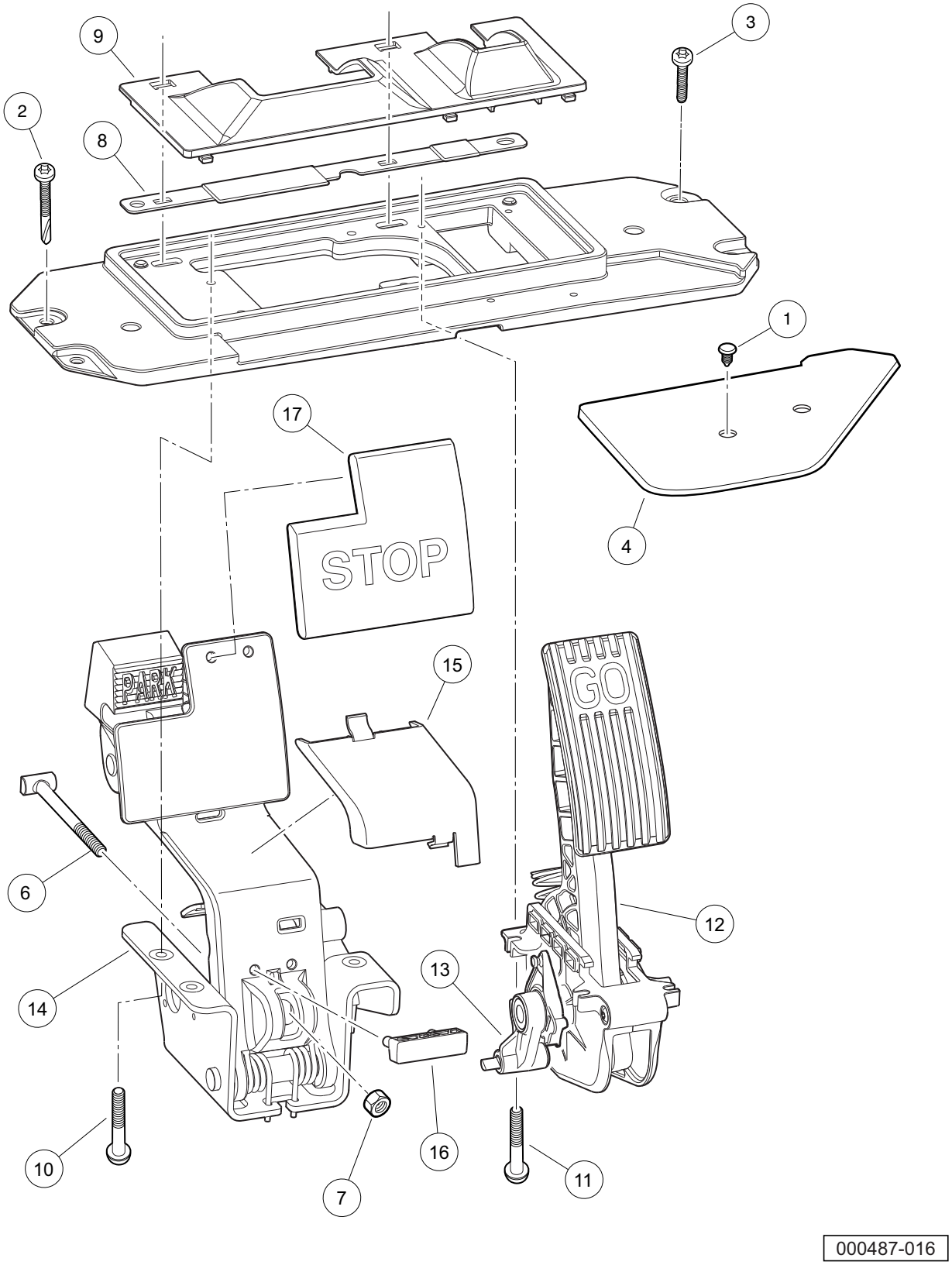
9
3
2
8
1
17
STOP
4
PARK
15
GO
6
12
13
14
16
10
7
11
000487-016

PEDAL GROUP W/O MCOR – ELECTRIC VEHICLE

ITEM	PART NO.	DESCRIPTION	QTY
		1 2 3 4	
1	1010434	Barrel - Plastic	1
2	102292201	Screw-1/4-20x2.20 Tx Pn Hd Sd	2
3	102298030	Screw, K80x30, Torx Pn Hd Pt	2
4	102500801	Plate - Floor Cover	1
5	103974821	Asm, Pedal, Anodized, Field Service, Gas or Elec (includes items 6 through 14)	1
6	102559401	Rod, Brake	1
7	102559701	Nut, Brake Rod	1
8	102594801	Shield, Debris Aux	1
9	102594901	Shield, Debris Primary	1
10	102595901	Screw, M6x1.0x17 Ph, Taptite	4
11	102596001	Screw, M5x0.8x18 Ph, Taptite	4
12	102596301	Pedal, Accelerator, Anodized, Gas or Elec (includes item 13)	1
13	103777601	Asm, Park Brake Release, Anodized	1
14	103974901	Asm, Brake Pedal, Anodized (includes items 15 through 17)	1
15	102595201	Cover, Brake	1
16	102595301	Upstop, Brake	1
17	102595401	Pad, Brake	1

Note: Pedal Assembly (item 5) has no MCOR and is common to both gas and electric vehicles.

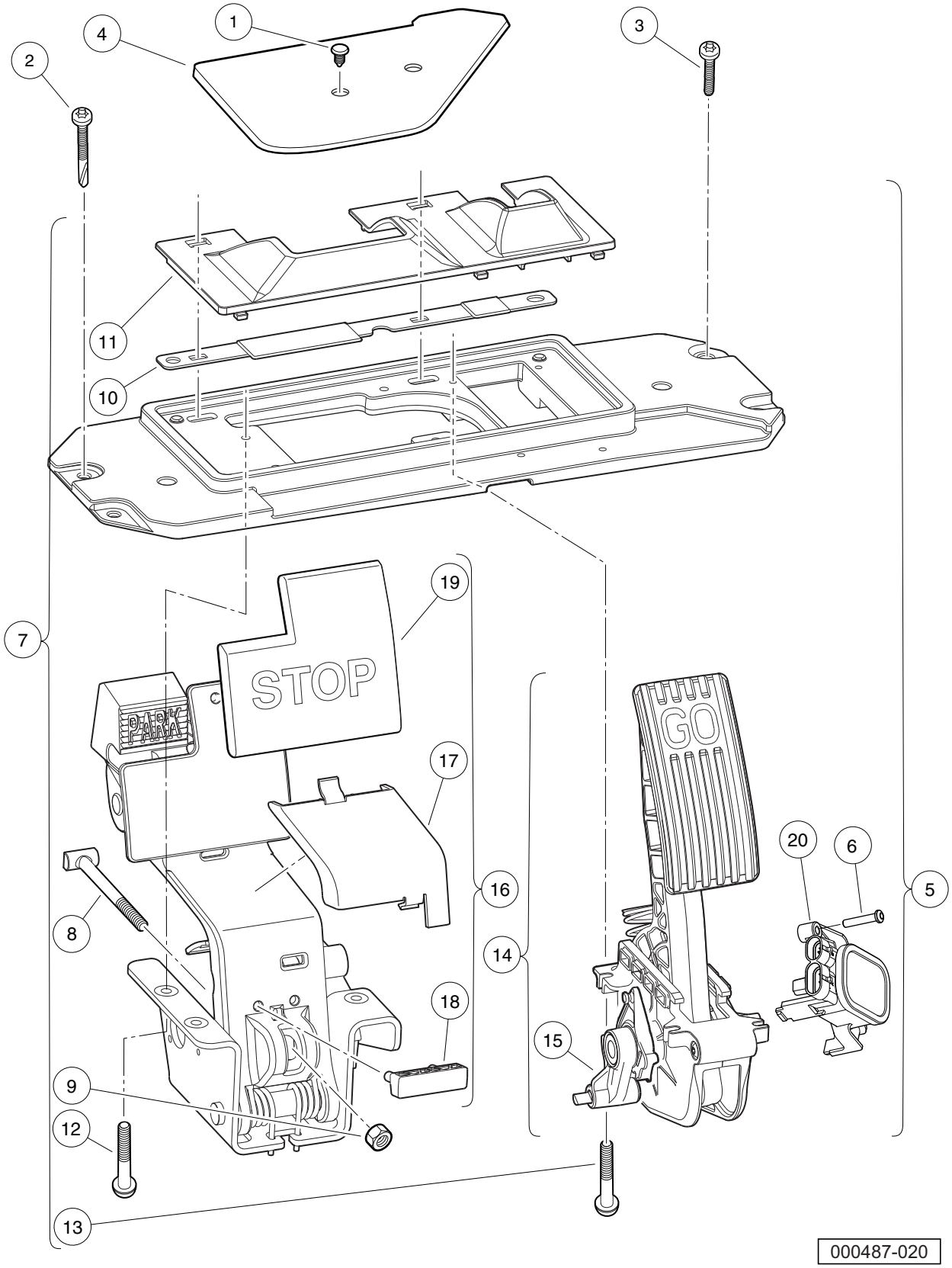
1
2
3
4
5
6
7
8
9
10
11
12
13
14
15
16
17
18
19
20
STOP
PARK
GO
000487-020

PEDAL GROUP WITH MCOR – ELECTRIC VEHICLE

ITEM	PART NO.	DESCRIPTION	QTY
		1 2 3 4	
1	1010434	Barrel - Plastic	1
2	102292201	Screw-1/4-20x2.20 Tx Pn Hd Sd	2
3	102298030	Screw, K80x30, Torx Pn Hd Pt	2
4	102500801	Plate - Floor Cover	1
5	103874111	Asm, Pedal Set, Anodized, w/MCOR, Service (includes items 6 through 20)	1
6	103943401	Screw, Pan, #10 X 1.00 Hi-lo	1
7	103975011	Asm, Pedal Set, Anodized, Service, Elec Vehicle (includes items 8 through 16)	1
8	102559401	Rod, Brake	1
9	102559701	Nut, Brake Rod	1
10	102594801	Shield, Debris Aux	1
11	102594901	Shield, Debris Primary	1
12	102595901	Screw, M6x1.0x17 Ph, Taptite	4
13	102596001	Screw, M5x0.8x18 Ph, Taptite	4
14	102596301	Pedal, Accelerator, Anodized, Gas or Elec (includes item 15)	1
15	103777601	Asm, Park Brake Release, Anodized	1
16	103974901	Asm, Brake Pedal, Anodized (includes items 17 through 19)	1
17	102595201	Cover, Brake	1
18	102595301	Upstop, Brake	1
19	102595401	Pad, Brake	1
20	105116301	MCOR4, Type 16 Switch	1

Note: See the Electrical System Section for more MCOR information.

5

G

E

STEERING, FRONT AND REAR SUSPENSION

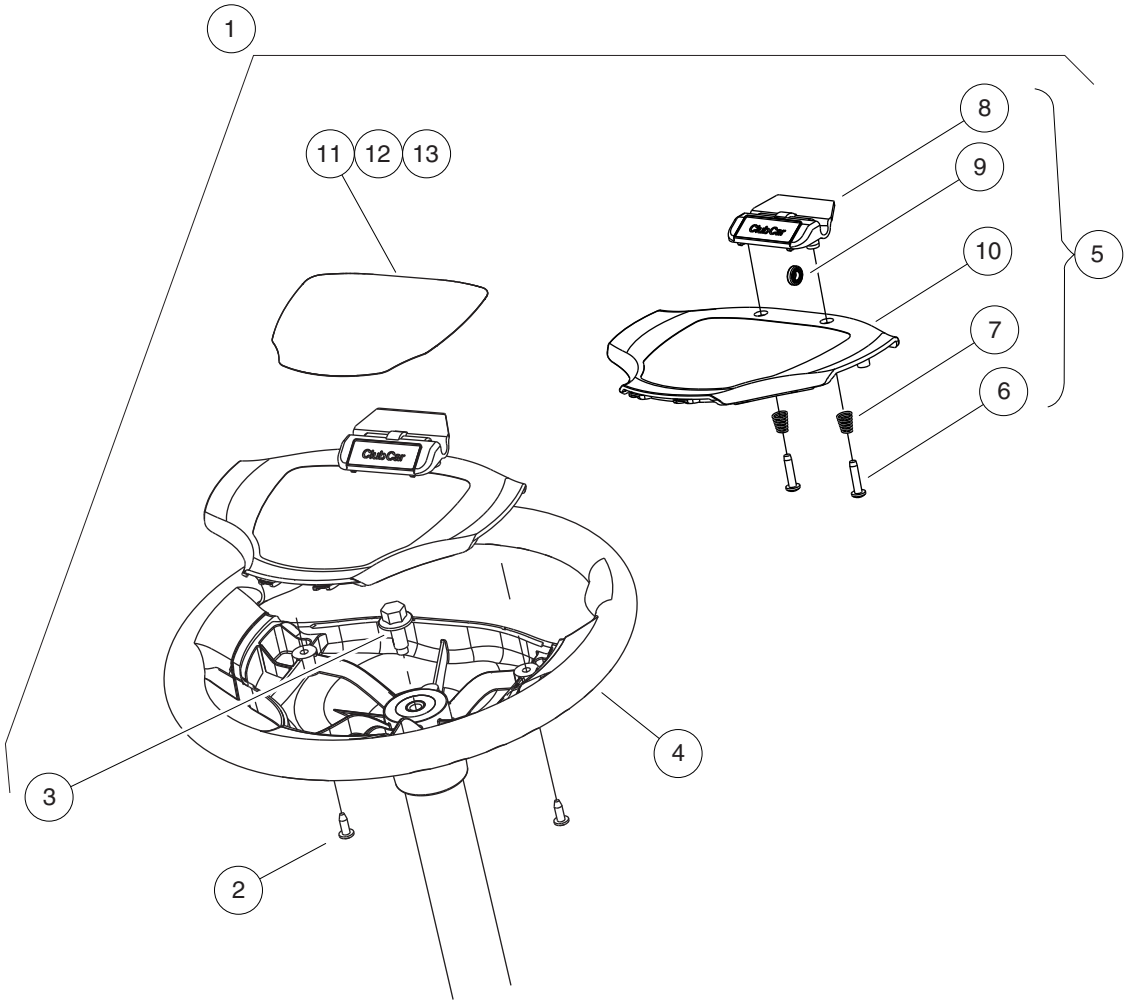

000470-002

STEERING WHEEL, COMFORT GRIP

ITEM	PART NO.	DESCRIPTION	QTY
		1 2 3 4	
1	103796701	Kit, Hex, Steering Wheel (includes items 2 through 13)	1
2	101850301	Screw, #12-16 X 0.50 Washer-Head Hi-Lo	2
3	102290120	Bolt, M10 X 20 Hex Washer Hd	1
4	103724503	Steering Wheel, Soft Grip, Hex	1
5	103724901	Asm, Scorecard, Clip (includes items 6 through 10)	1
6	1012565	Screw, #12 Phillips Round Head	2
7	1012566	Tapered Compression Spring	2
8	1016154	Clip, Scorecard	1
9	1016214	Pencil Grip	1
10	103724601	Cover, Steering Wheel, Clip	1
11	103783001	Decal, Op Instr, Ele	1
12	103783002	Decal, Op Instr, Gas Ps	1
13	103783003	Decal, Op Instr, Gas Ks	1

Note: Decal Item 13 is not used for Precedent vehicles.

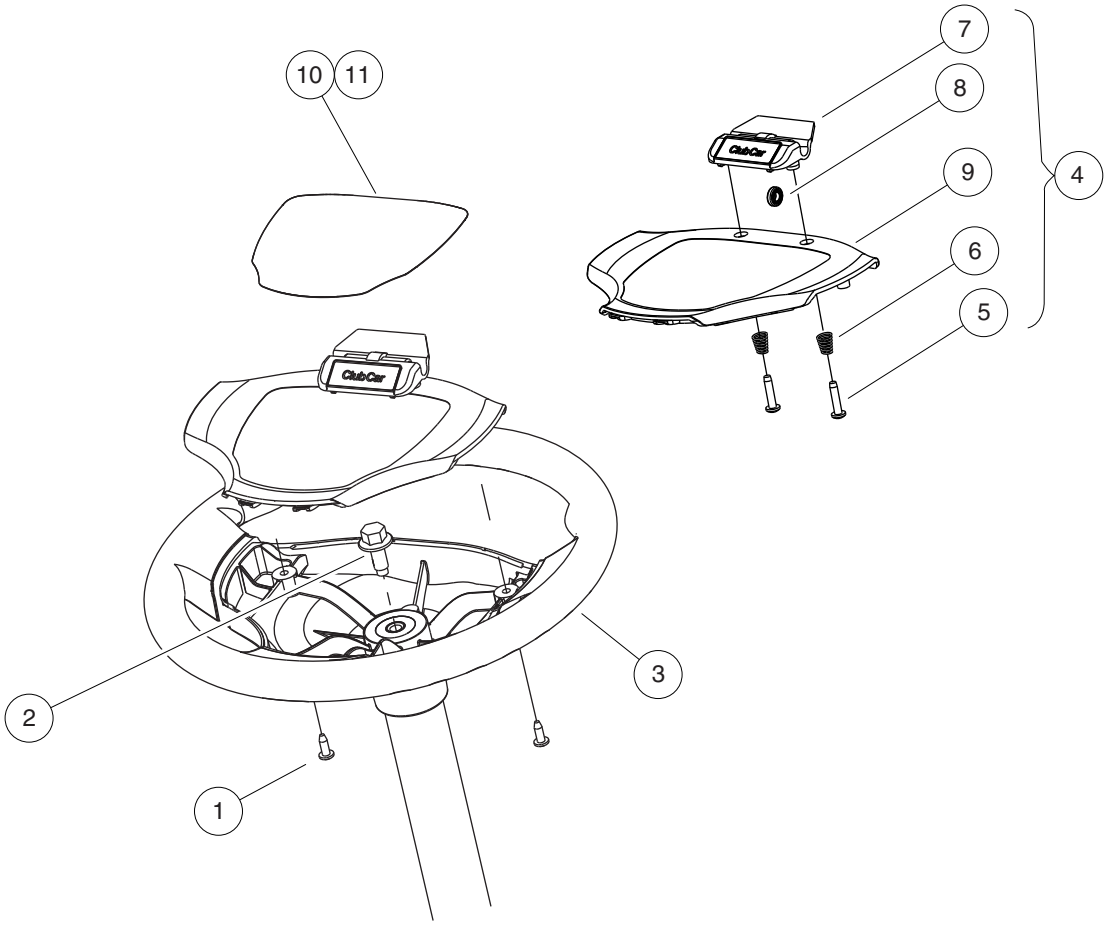

000470-005

STEERING WHEEL

ITEM	PART NO.	DESCRIPTION	QTY
		1 2 3 4	
1	101850301	Screw, #12-16 X 0.50 Washer-Head Hi-Lo	2
2	102290120	Bolt, M10 X 20 Hex Washer Hd	1
3	103724501	Steering Wheel, Hex	1
4	103724901	Asm, Scorecard, Clip (includes items 5 through 9)	1
5	1012565	Screw, #12 Phillips Round Head	2
6	1012566	Tapered Compression Spring	2
7	1016154	Clip, Scorecard	1
8	1016214	Pencil Grip	1
9	103724601	Cover, Steering Wheel, Clip	1
10	103783001	Decal, Op Instr, Ele	1
11	103783002	Decal, Op Instr, Gas Ps	1

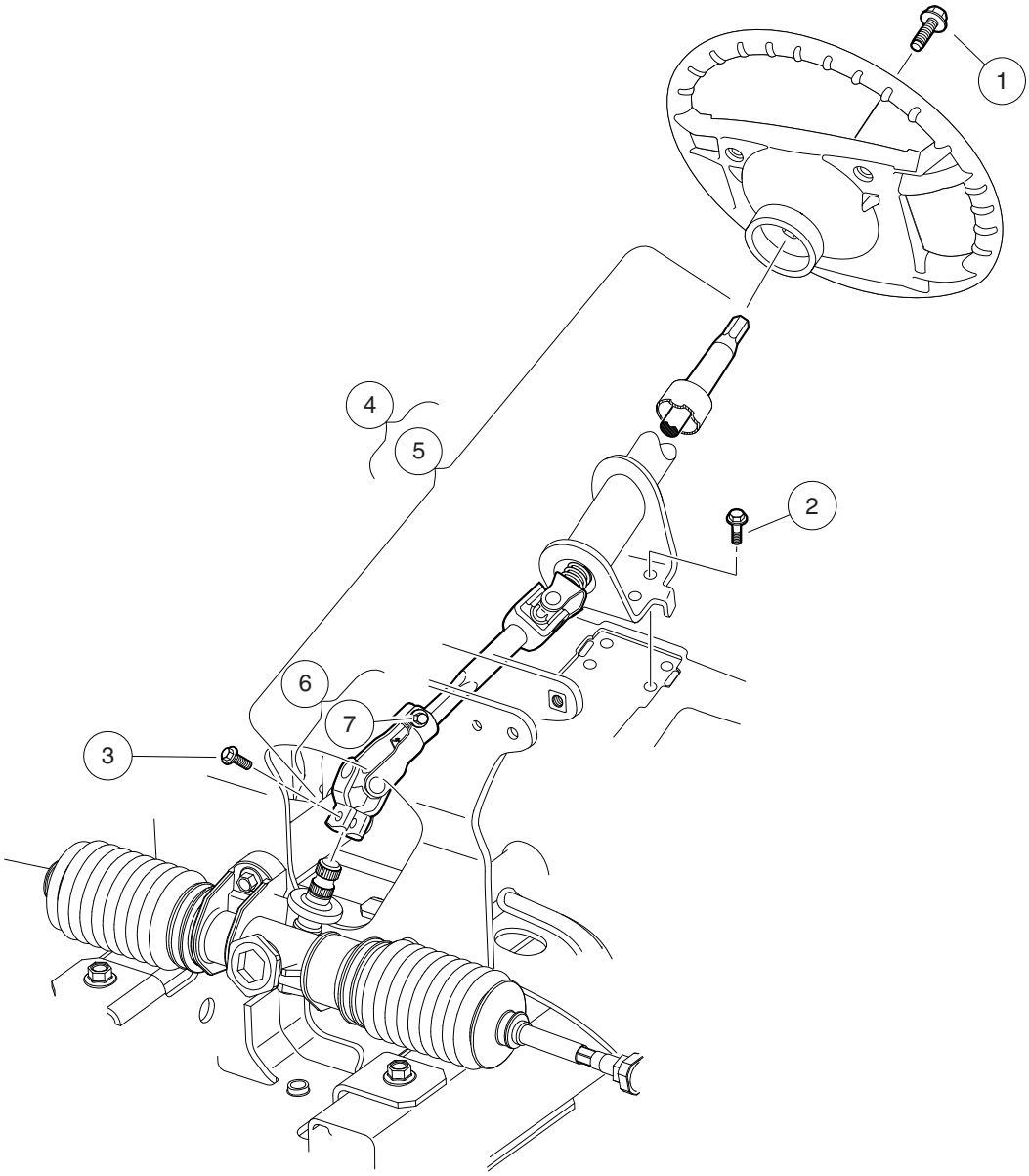

000469-007

ITEM	PART NO.	DESCRIPTION	QTY
		1 2 3 4	
1	102290120	Bolt, M10 X 20 Hex Washer Hd	1
2	102298116	Bolt, Flanged Head, M8 X 16.0	4
3	102298130	Bolt, Flange Head, M8 X 30.0	1
4	105049001	Kit, Inner Steering Clmn, Prec (includes item 5)	1
5	105068601	Asm, Column, Inner, Prec (includes item 6)	1
6	103810201	Kit, Prec Lower Yoke, Wanda (includes item 7)	1
7	102298130	Bolt, Flange Head, M8 X 30.0	1

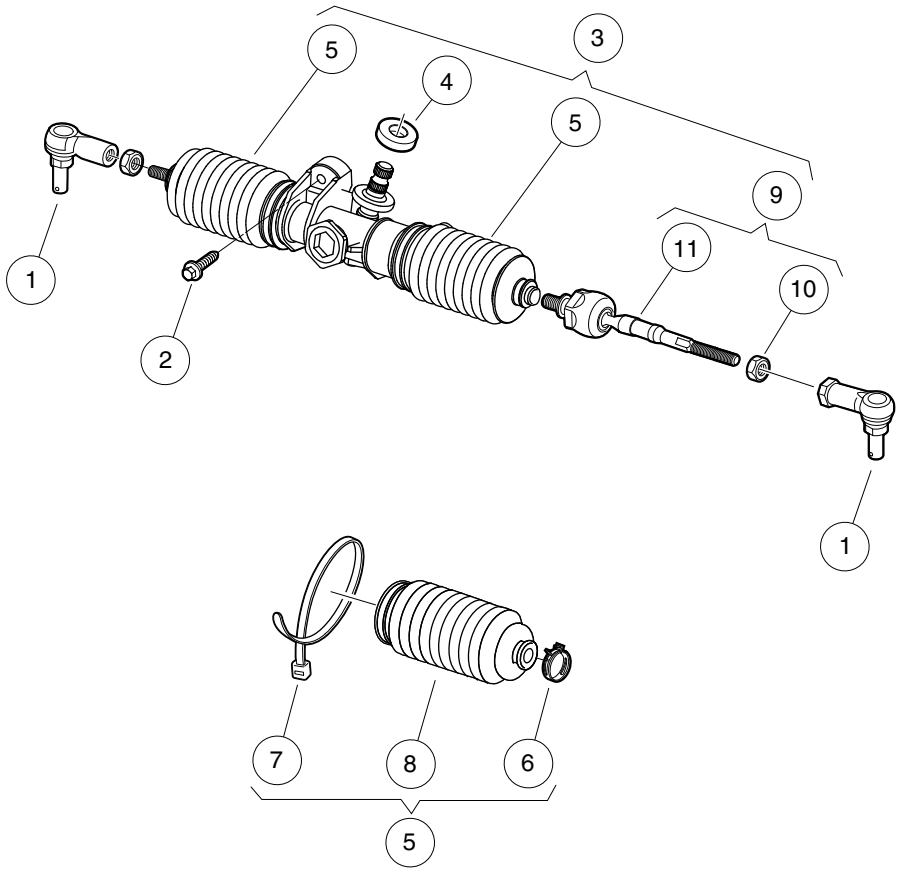

000476-005

STEERING GEAR ASSEMBLY

ITEM	PART NO.	DESCRIPTION	QTY
		1 2 3 4	
1	102022601	End, Tie Rod M12 X 1.25 Rh	2
2	102289001	Screw, M8X1.25X30, Hex	3
3	103679701	Asm, Rack & Pinion, Precedent (includes items 4 through 9)	1
4	102565201	Seal, Dust, Steering Pinion	1
5	103826201	Bellow Kit, Prec Steering-sona (includes items 6 through 8)	2
6	102566001	Clip, Steering, Prec	1
7	8990	Tie Wrap, 8" Nylon	1
8	N/A	Bellows	1
9	103826301	Kit, IBJ (Inner Ball Joint), Prec Steering-sona (includes items 10 and 11)	2
10	1013042	Nut, 12mm Hex	1
11	N/A	Inner Ball Joint	1

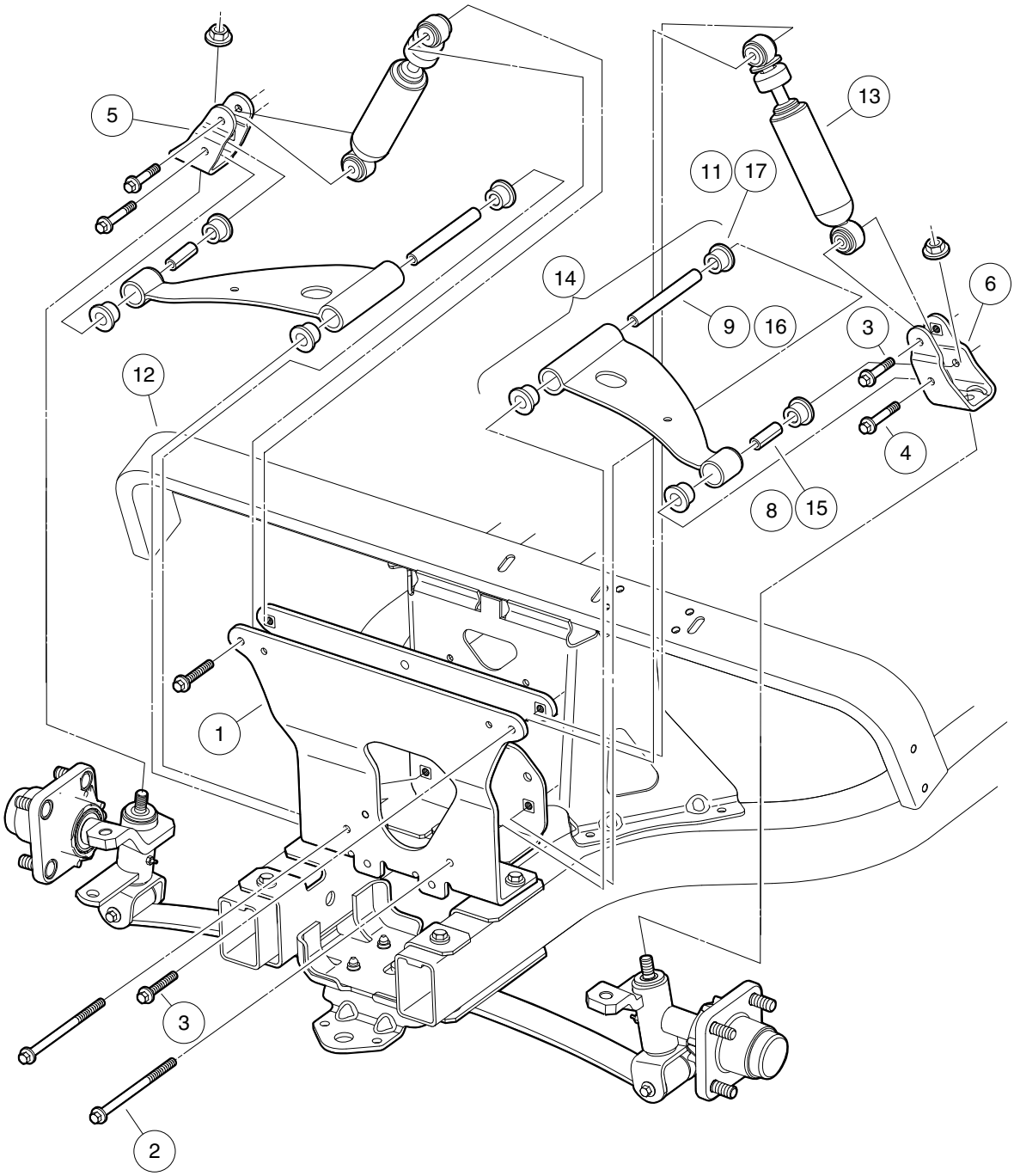

000445-005

FRONT SUSPENSION, UPPER

ITEM	PART NO.	DESCRIPTION	QTY
		1 2 3 4	
1	102287101	Assembly - Front Structure	1
2	102288901	Bolt, Hex, M8x1.25 X 135	2
3	102289401	Screw- Hex Cap, M8 X 1.25 X 45	4
4	102289501	Screw- Hex Cap, M8 X 1.25 X 70	2
5	102289601	Upper Clevis Assembly - Rh	1
6	102289701	Upper Clevis Assembly - Lh	1
7	102289901	Kit, Susp, Bushing Joints (includes items 8 through 11)	1
8	102287601	Sleeve - Rolled, Outer	2
9	102287701	Sleeve - Rolled, Inner	2
10	102288101	Sleeve - Rolled, Spring	2
11	102956201	Bushing, Urethane, Short, Prec	12
12	102505701	Assembly, Dash Support	1
13	102588601	Shock Absorber Front Prv Spd	2
14	103388501	Asm, 3 Piece A-arm, Bushings (includes items 15 through 17)	2
15	102287601	Sleeve - Rolled, Outer	1
16	102287701	Sleeve - Rolled, Inner	1
17	102956201	Bushing, Urethane, Short, Prec	4

Note: Item 7 (not shown) includes bushings and sleeves for control arms and front suspension leaf spring. See lower suspension page for illustration of Sleeve Item 10.

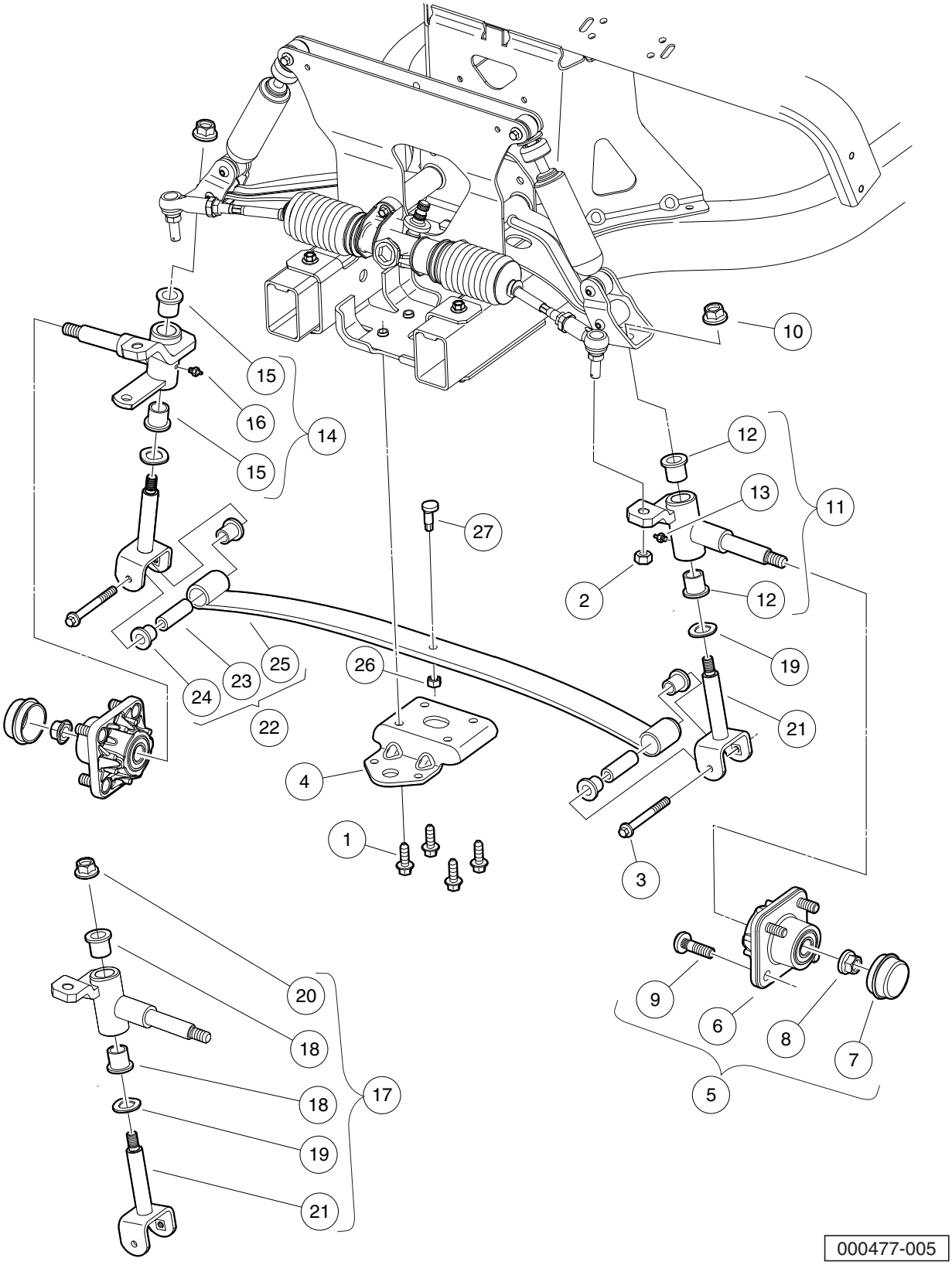
10
15
16
14
15
12
13
11
27
2
12
19
25
23
24
22
26
21
4
1
3
20
18
18
17
19
21
9
6
8
7
5
000477-005

FRONT SUSPENSION, LOWER

ITEM	PART NO.	DESCRIPTION	QTY
		1 2 3 4	
1	102289101	Screw-m10x1.5, Trilob, Hex Fl	4
2	102289201	Nut - Hex Locking, M12 X 1.25	2
3	102289501	Screw- Hex Cap, M8 X 1.25 X 70	2
4	102289801	Clamp - Leaf Spring	1
5	102357701	Replacement Kit, Front Hub (includes items 6 through 9)	1
6	N/A	Front Hub, Ball Bearing	1
7	102353201	Cap, Front Hub	1
8	102353301	Hex Nut, Locking Flange, M14x2	1
9	102353401	Lug Stud, 1/2-20 UNF, 4037 Stl	4
10	102878201	Nut, Lock,m12,washer,conical	2
11	103638701	Asm, Spindle-bushings, Lh (includes items 12 and 13)	1
12	102288201	Bushing - Flanged	2
13	N/A	Fitting, Grease, Knuckle Spindle Asym	1
14	103638702	Asm, Spindle-bushings, Rh (includes items 15 and 16)	1
15	102288201	Bushing - Flanged	2
16	N/A	Fitting, Grease, Knuckle Spindle Asym	1
17	103638801	Kit, King Pin Joints, Prec (includes items 18 through 21)	1
18	102288201	Bushing - Flanged	4
19	102288401	Wave Washer - Kingpin	2
20	102878201	Nut, Lock,m12,washer,conical	2
21	103638601	Asm, King Pin, M12	2
22	103711001	Asm, Spring, Leaf, Front, Prec (includes items 23 through 25)	1
23	102288101	Sleeve - Rolled, Spring	2
24	102956201	Bushing, Urethane, Short, Prec	4
25	N/A	Spring, 1 Leaf, Front	1
26	706	Nut, Hex 3/8-16	1
27	8745	Screw, Eccentric Adjustment	1

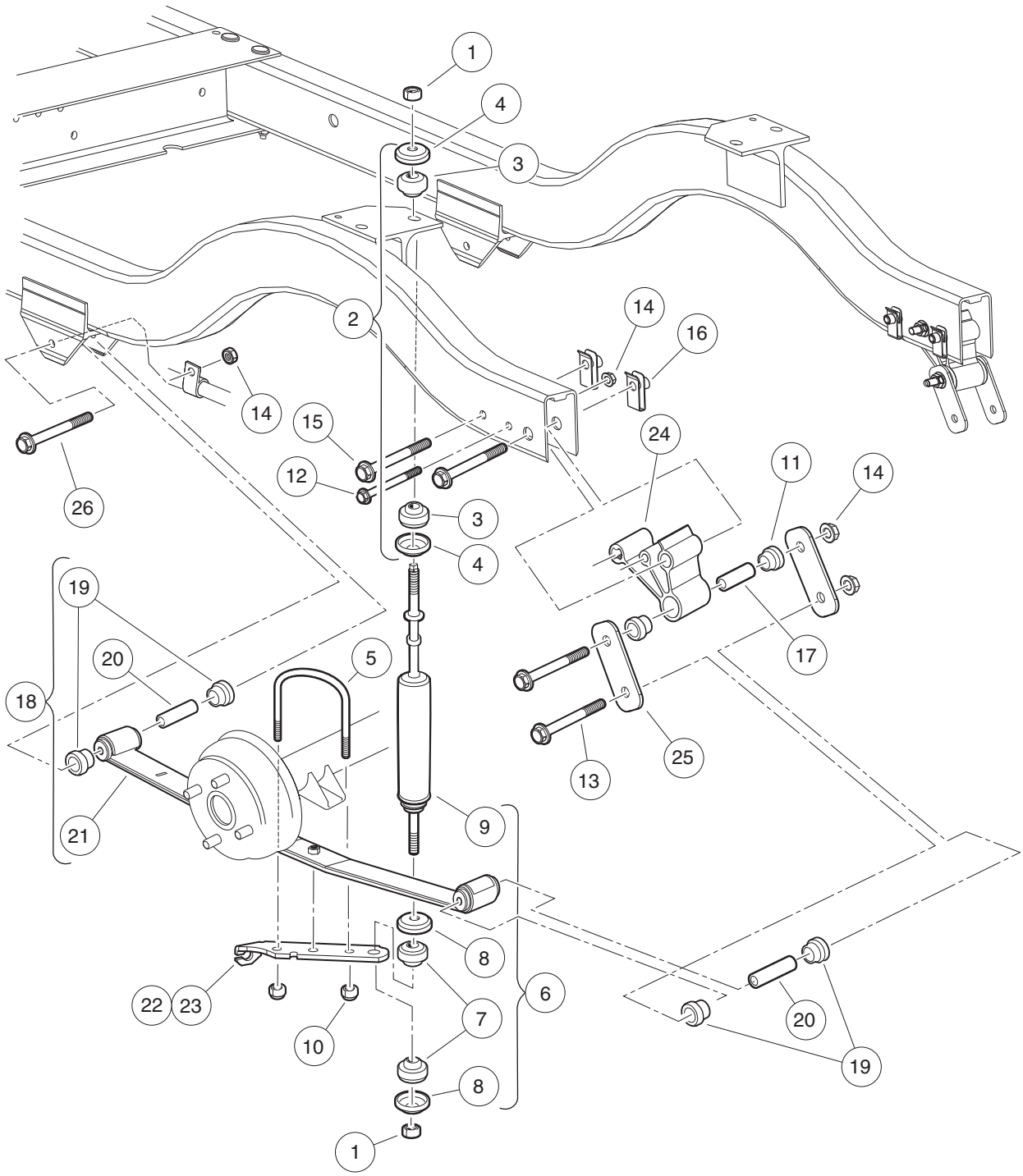
1
4
3
2
14
16
14
15
24
12
11
14
26
3
4
19
20
5
17
18
25
13
21
9
8
22
23
6
7
20
10
19
8
1

000446-005

REAR SUSPENSION, GASOLINE VEHICLE

ITEM	PART NO.	DESCRIPTION	QTY
		1 2 3 4	
1	1010145	Nut, 3/8-24 Hex	4
2	1011415	Kit, Shock Absorber Cushion (includes items 3 and 4)	2
3	N/A	Cushion, Shock Absorber	2
4	N/A	Retainer, Shock Absorber Cushion	2
5	1012180	U-Bolt	2
6	1013164	Shock Absorber Kit (includes items 7 through 9)	1
7	N/A	Cushion, Shock Absorber	8
8	N/A	Retainer, Shock Absorber Cushion	8
9	102588501	Shock Absorber Rear Prv Spd	2
10	1014555	Locknut, 7/16-14 Nylon Hex	4
11	1015583	Bushing, Urethane	4
12	102298170	Bolt - Flange Hd, M8 X 70.0	2
13	102298175	Bolt - Flange Hd, M8 X 75.0	2
14	102298401	Nut,m8,all Metal Lock	8
15	102298580	M8-1.25 X 80 Sems	4
16	102298601	J-clip - M8 X 1.25	4
17	102506401	Sleeve - Spring Eye Mounts	2
18	103742305	Asm, Rear Leaf Spring, Prec, Gas (includes items 19 through 21)	2
19	101558302	Bushing, Urethane, Soft	4
20	102506401	Sleeve - Spring Eye Mounts	2
21	N/A	Leaf Spring, Rear, Prec Gas	1
22	103921601	Bracket, Shock Mounting, Drv	1
23	103921602	Bracket, Shock Mounting, Pas	1
24	103964901	Spacer, Rail, Shackle	2
25	103965001	Brkt, Shackle, Rear	4
26	105188185	Bolt, M8 X 85mm, 10.9 Grade	4

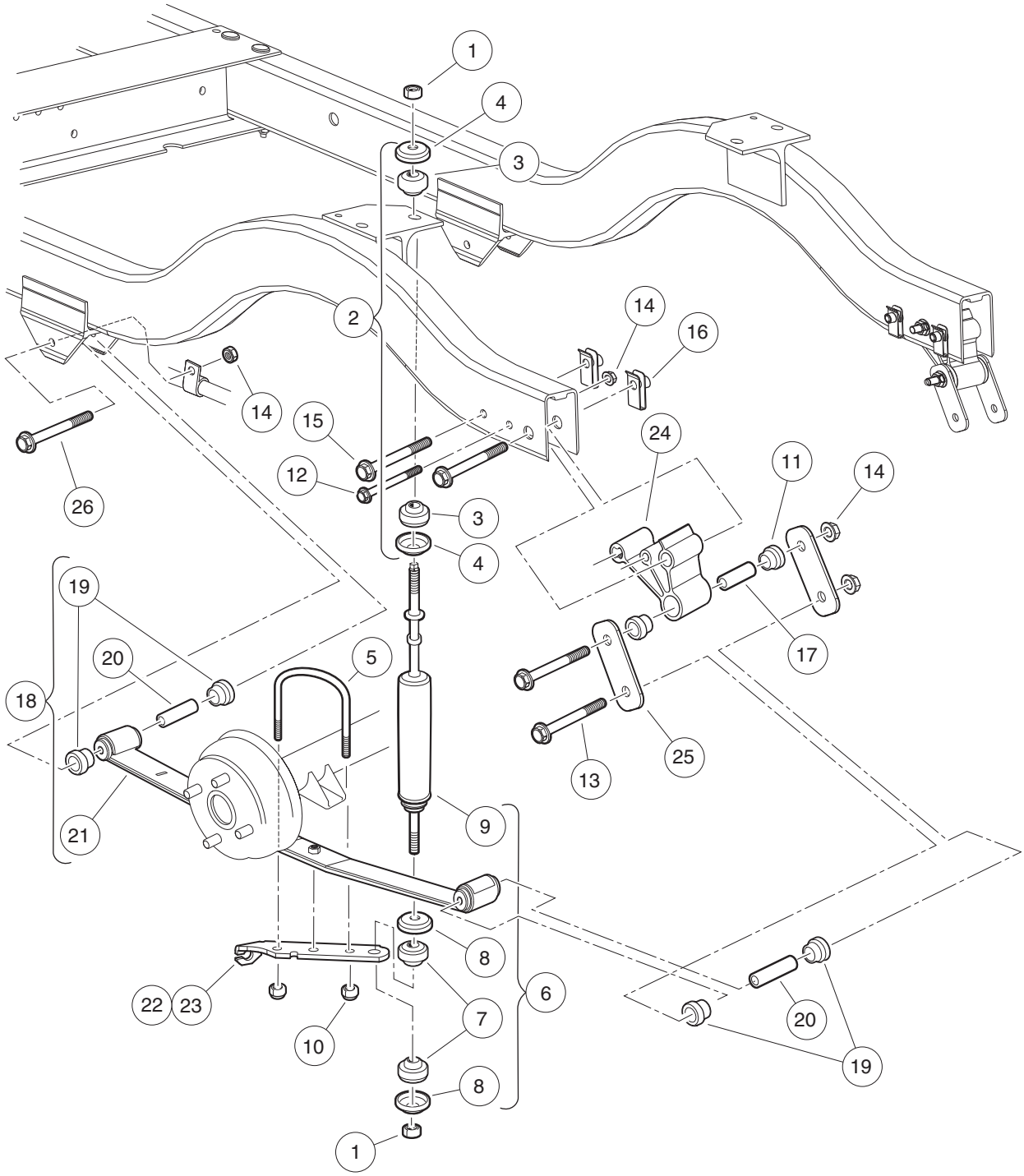
1
4
3
2
14
16
14
15
24
12
11
14
26
3
4
19
20
5
17
18
25
13
21
9
8
22
23
6
7
20
10
19
8
1

000446-005

REAR SUSPENSION, ELECTRIC VEHICLE

ITEM	PART NO.	DESCRIPTION	QTY
		1 2 3 4	
1	1010145	Nut, 3/8-24 Hex	4
2	1011415	Kit, Shock Absorber Cushion (includes items 3 and 4)	2
3	N/A	Cushion, Shock Absorber	2
4	N/A	Retainer, Shock Absorber Cushion	2
5	1012180	U-Bolt	2
6	1013164	Shock Absorber Kit (includes items 7 through 9)	1
7	N/A	Cushion, Shock Absorber	8
8	N/A	Retainer, Shock Absorber Cushion	8
9	102588501	Shock Absorber Rear Prv Spd	2
10	1014555	Locknut, 7/16-14 Nylon Hex	4
11	1015583	Bushing, Urethane	4
12	102298170	Bolt - Flange Hd, M8 X 70.0	2
13	102298175	Bolt - Flange Hd, M8 X 75.0	2
14	102298401	Nut,m8,all Metal Lock	8
15	102298580	M8-1.25 X 80 Sems	4
16	102298601	J-clip - M8 X 1.25	4
17	102506401	Sleeve - Spring Eye Mounts	2
18	103742304	Asm, Rear Leaf Spring, Prec, Elec (includes items 19 through 21)	2
19	101558302	Bushing, Urethane, Soft	4
20	102506401	Sleeve - Spring Eye Mounts	2
21	N/A	Leaf Spring, Rear, Prec Elec	1
22	103921601	Bracket, Shock Mounting, Drv	1
23	103921602	Bracket, Shock Mounting, Pas	1
24	103964901	Spacer, Rail, Shackle	2
25	103965001	Brkt, Shackle, Rear	4
26	105188185	Bolt, M8 X 85mm, 10.9 Grade	4

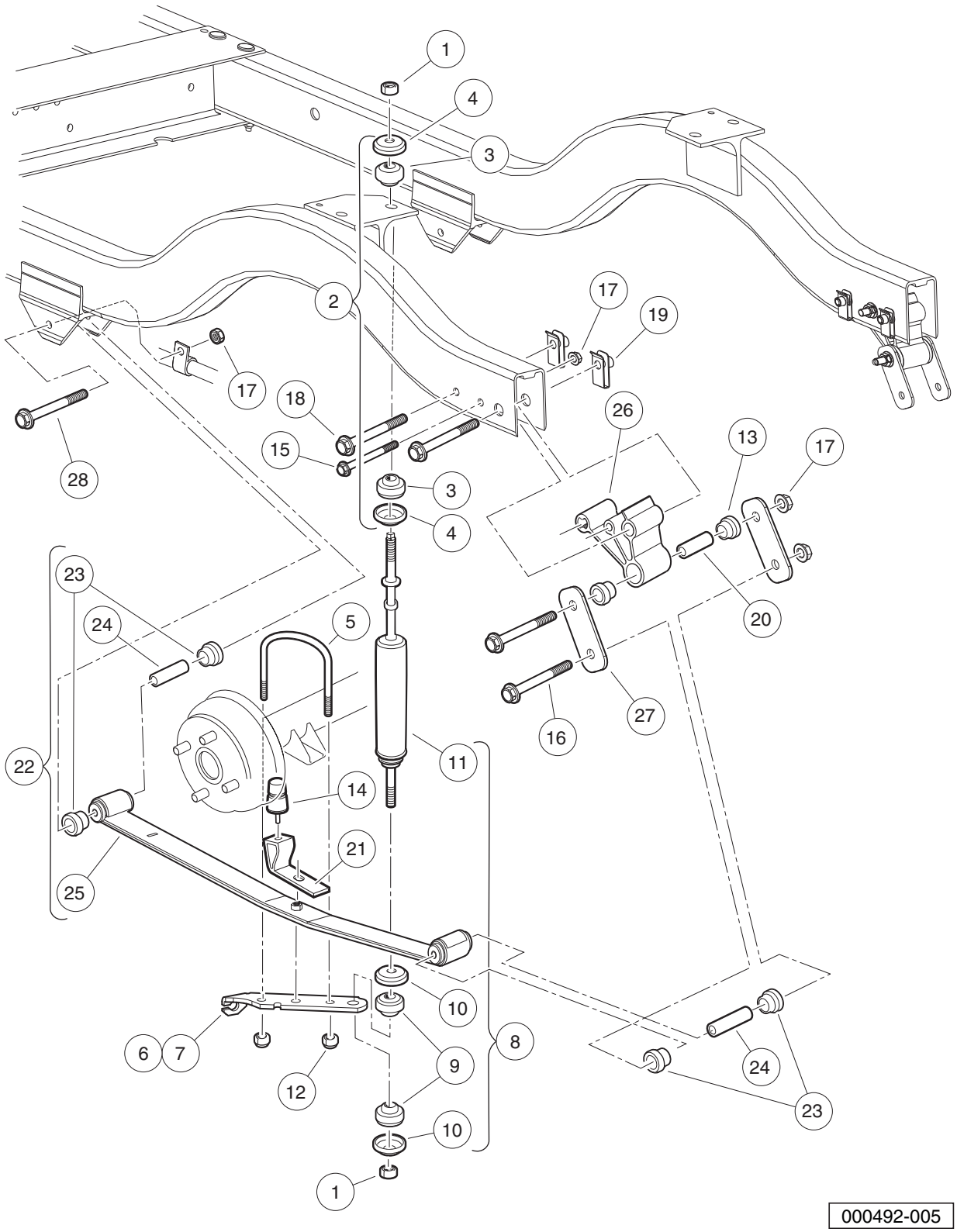
1
4
3
2
17
19
17
18
26
15
13
17
28
3
4
23
20
24
5
27
16
22
11
14
21
25
10
6
7
8
9
24
12
23
10
1
000492-005

REAR SUSPENSION, PRECEDENT VILLAGER 4

ITEM	PART NO.	DESCRIPTION	QTY
		1 2 3 4	
1	1010145	Nut, 3/8-24 Hex	4
2	1011415	Kit, Shock Absorber Cushion (includes items 3 and 4)	2
3	N/A	Cushion, Shock Absorber	2
4	N/A	Retainer, Shock Absorber Cushion	2
5	1012180	U-Bolt	2
6	1012181	Bracket, Shock Mounting, Right (Passenger)	1
7	1012182	Bracket, Shock Mounting, Left (Driver)	1
8	1013164	Shock Absorber Kit (includes items 9 through 11)	1
9	N/A	Cushion, Shock Absorber	8
10	N/A	Retainer, Shock Absorber Cushion	8
11	102588501	Shock Absorber Rear Prv Spd	2
12	1014555	Locknut, 7/16-14 Nylon Hex	4
13	1015583	Bushing, Urethane	4
14	1017235	Bumper, Jounce	2
15	102298170	Bolt - Flange Hd, M8 X 70.0	2
16	102298175	Bolt - Flange Hd, M8 X 75.0	2
17	102298401	Nut,m8,all Metal Lock	8
18	102298580	M8-1.25 X 80 Sems	4
19	102298601	J-clip - M8 X 1.25	4
20	102506401	Sleeve - Spring Eye Mounts	2
21	102534801	Jounce Bumper Bracket	2
22	103742306	Asm, Rear Leaf Spring, Prec, 4-Passenger (includes items 23 through 25)	2
23	101558302	Bushing, Urethane, Soft	4
24	102506401	Sleeve - Spring Eye Mounts	2
25	N/A	Leaf Spring, Rear, Prec 4pass	1
26	103964901	Spacer, Rail, Shackle	2
27	103965001	Brkt, Shackle, Rear	4
28	105188185	Bolt, M8 X 85mm, 10.9 Grade	4

6

G

E

ELECTRICAL SYSTEM – SUBARU EX40

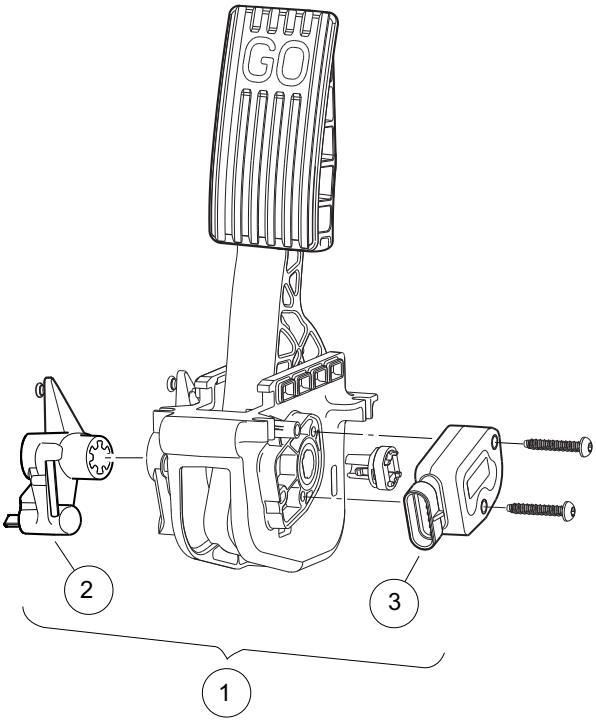

000487-012

ACCELERATOR PEDAL ASSEMBLY W/SENSOR – EFI

ITEM	PART NO.	DESCRIPTION	QTY
		1 2 3 4	
1	102595502	Asm, Accel. Pedal/Throttle, Anodized, Gas Vehicle (includes items 2 and 3)	1
2	103777601	Asm, Park Brake Release, Anodized	1
3	N/A	Throttle Sensor	1
		Note: For a complete Pedal Group, see section 5, Brakes and Pedal Group Assemblies.	

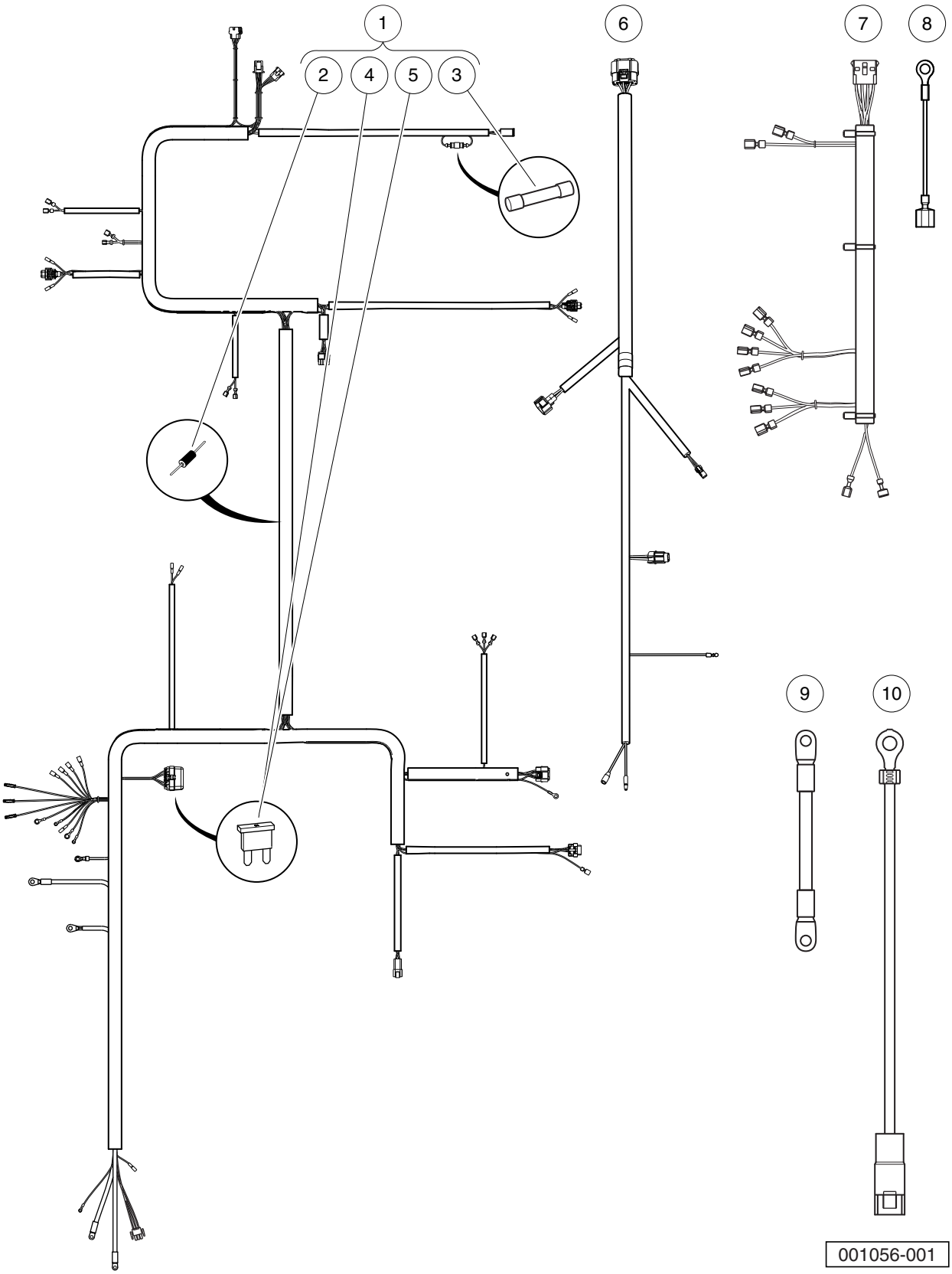
1
2
4
5
3
6
7
8
9
10
001056-001

WIRING, FUSES AND ECU – EFI WITH SIDE-POST BATTERY

ITEM	PART NO.	DESCRIPTION	QTY
		1 2 3 4	
1	105007501	Harness, Wire, Main, Precedent with Side-Post Battery (includes items 2 through 5)	1
2	1014789	Diode, General Purpose, 3.0-Amp	1
3	103924801	Fuse, Glass, 2-Amp	1
4	105081501	Fuse, ATM, 5-Amp	1
5	105081601	Fuse, ATM, 10-Amp	1
6	105008101	Harness, Wire, ECU/Engine	1
7	105008301	Wire Harness, Dash, Prec	1
8	105143301	Wire, Ground, Fuel Tank	1
9	105161701	Wire, 4-Ga, Green, Starter/Generator	1
10	105228801	Wire, Ground, Engine, Prec	1

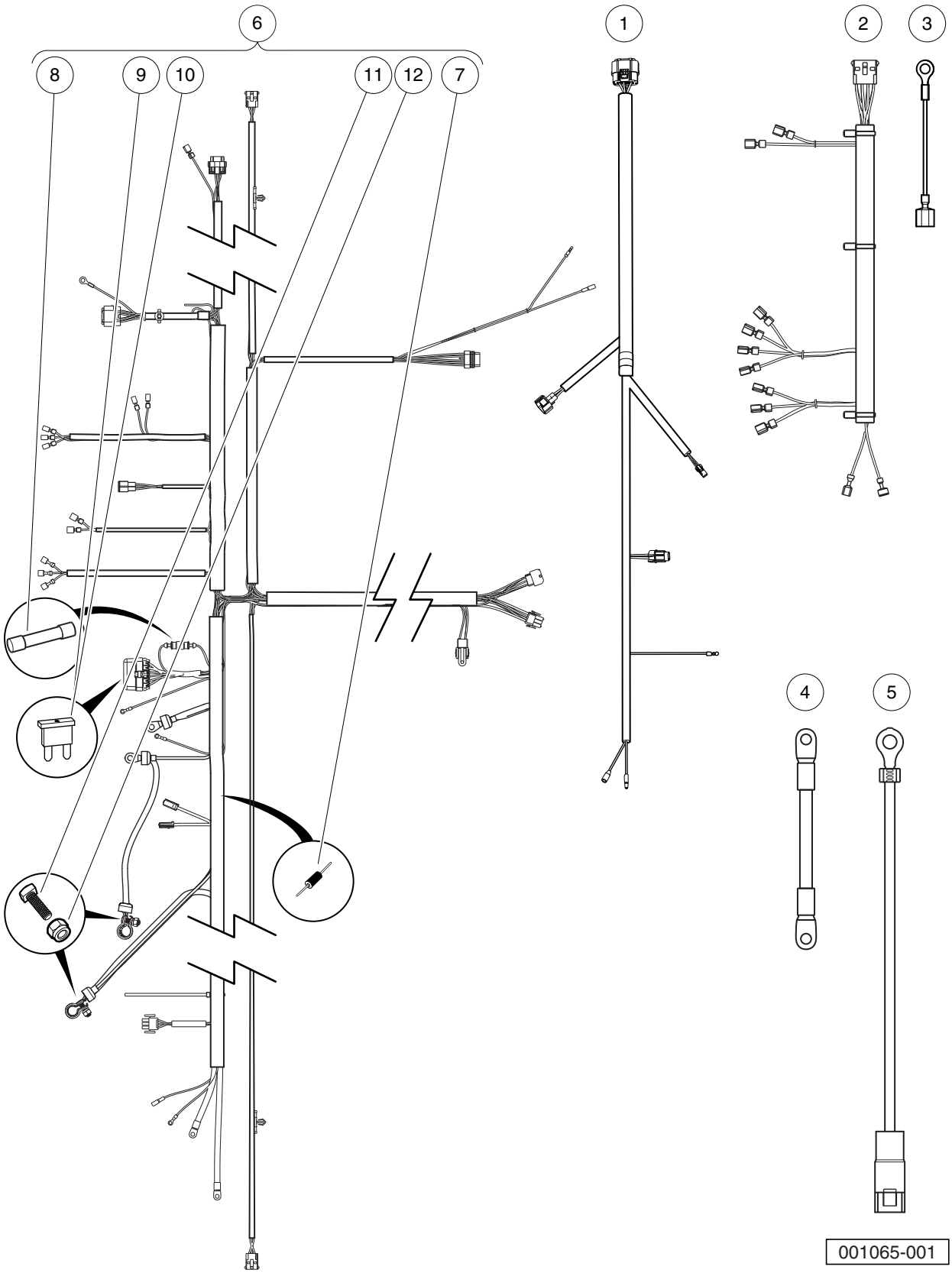
6
8
9
10
11
12
7
1
2
3
4
5
001065-001

WIRING, FUSES AND ECU – EFI WITH TOP-POST BATTERY

ITEM	PART NO.	DESCRIPTION	QTY
		1 2 3 4	
1	105008101	Harness, Wire, ECU/Engine	1
2	105008301	Wire Harness, Dash, Prec	1
3	105143301	Wire, Ground, Fuel Tank	1
4	105161701	Wire, 4-Ga, Green, Starter/Generator	1
5	105228801	Wire, Ground, Engine, Prec	1
6	105236701	Harness, Wire, Main, Precedent with Top-Post Battery (includes items 7 through 12)	1
7	1014789	Diode, General Purpose, 3.0-Amp	1
8	103924801	Fuse, Glass, 2-Amp	1
9	105081501	Fuse, ATM, 5-Amp	1
10	105081601	Fuse, ATM, 10-Amp	1
11	105255501	Bolt, Sqh 5/16-18x1	2
12	105255601	Nut, Colar Hex, 5/16-18	2

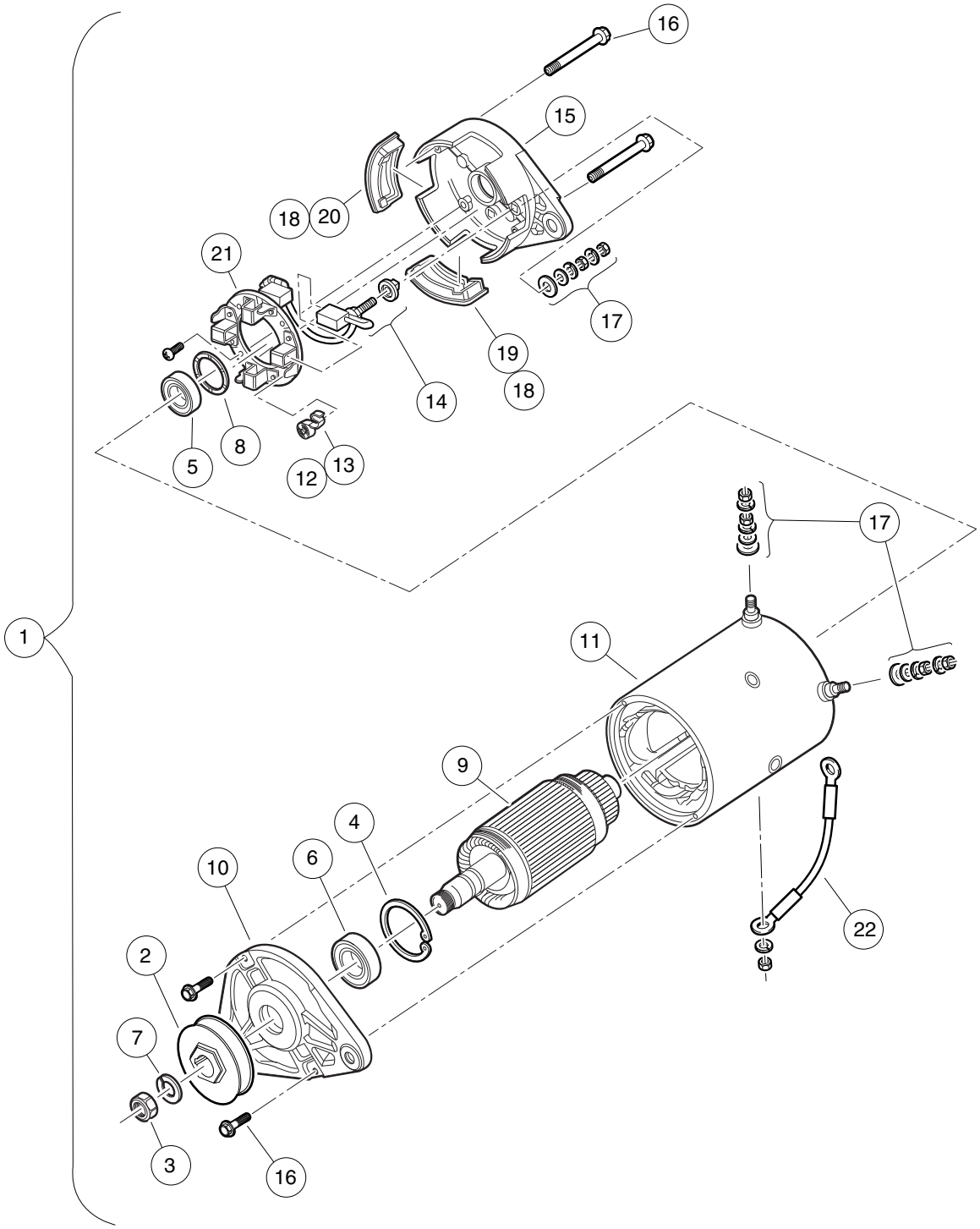

001016-001

STARTER/GENERATOR (MODEL 114-05-4001), PEDAL-START – EFI

ITEM	PART NO.	DESCRIPTION	QTY
		1 2 3 4	
1	105190101	Starter/Generator, High-Torque, Utility, Pedal-Start (includes items 2 through 22)	1
2	1014289	Pulley, Starter/Generator	1
3	102838701	Nut, Hex, M14x2, S/G	1
4	102838801	Retainer, Front, S/G	1
5	102838901	Bearing, Ball, Front, S-g	1
6	102839001	Bearing, Ball, Front, S-g	1
7	102839301	Washer, Lock M14x2, S-g	1
8	102841101	Washer, Wave, S-g	1
9	N/A	Asm, Armature, Starter/Generator	1
10	102844601	Head, Drive End, S-g	1
11	102844701	Asm, Frame and Field, Starter/Generator	1
12	103347101	Kit, Spring Brush, Starter/Generator (includes item 13)	1
13	N/A	Spring, Brush, S-g	4
14	103347301	Set, Brush Term, S-g	1
15	103347601	Head, Comm End, S-g	1
16	103347701	Set, Fastener, Ceh Deh, S-g	1
17	103347801	Set, Term Hardware, S/G	1
18	103347901	Kit, Cover, Brush Insp, Starter/Generator (includes items 19 and 20)	1
19	N/A	Plug, Rubber Drain, Start/Generator	3
20	N/A	Cover, Inspection, S-g	1
21	103953301	Kit, Brush And Brush Holder	1
22	105161701	Wire, 4-Ga, Green, Starter/Generator	1

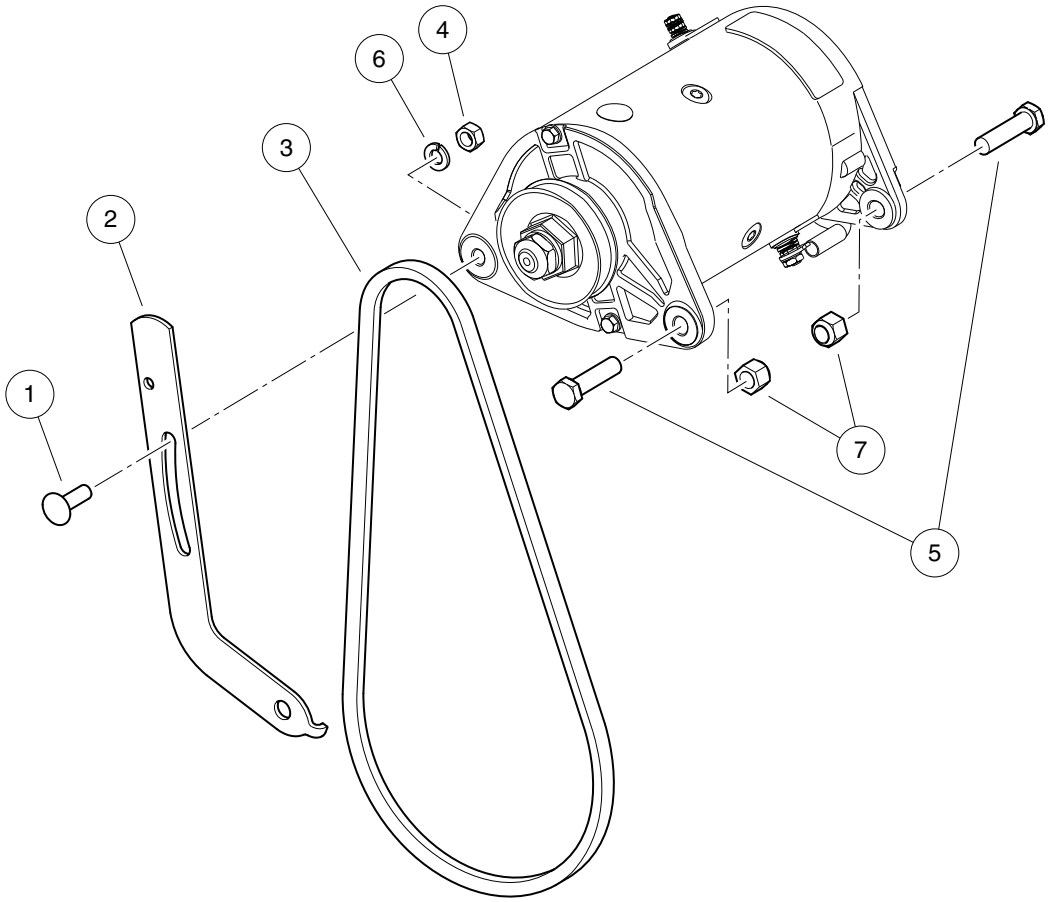

001009-001

STARTER/GENERATOR MOUNTING, EX40 – TO EARLY-2016 MODEL YEAR

ITEM	PART NO.	DESCRIPTION	QTY
		1 2 3 4	
1	1015932	Bolt, Carriage, 5/16-18	1
2	104005301	Bracket, Adjustable, Starter/Generator, EX40	1
3	105205401	Belt, Sg, 871, Ex40	1
4	1242	Nut, 5/16-18 Hex	1
5	1624	Screw, 3/8-16 X 1.50, Hex-Head Cap	2
6	7174	Lockwasher, 5/16 Split	1
7	8754	Locknut, 3/8-16 Hex	2

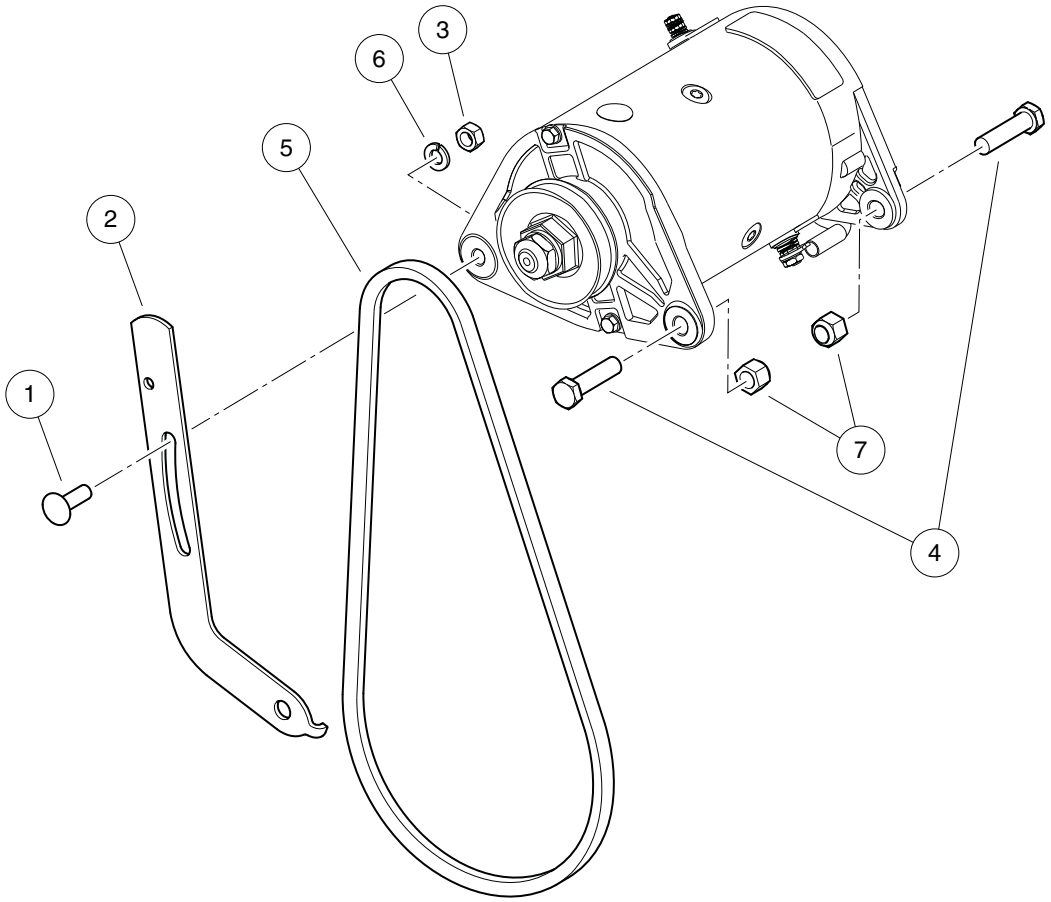

001009-002

STARTER/GENERATOR MOUNTING, EX40 – FROM EARLY-2016 MODEL YEAR

ITEM	PART NO.	DESCRIPTION	QTY
		1 2 3 4	
1	1015932	Bolt, Carriage, 5/16-18	1
2	104005301	Bracket, Adjustable, Starter/Generator, EX40	1
3	1242	Nut, 5/16-18 Hex	1
4	1624	Screw, 3/8-16 X 1.50, Hex-Head Cap	2
5	47539338001	Belt, Sg, Ex40, #5a	1
6	7174	Lockwasher, 5/16 Split	1
7	8754	Locknut, 3/8-16 Hex	2

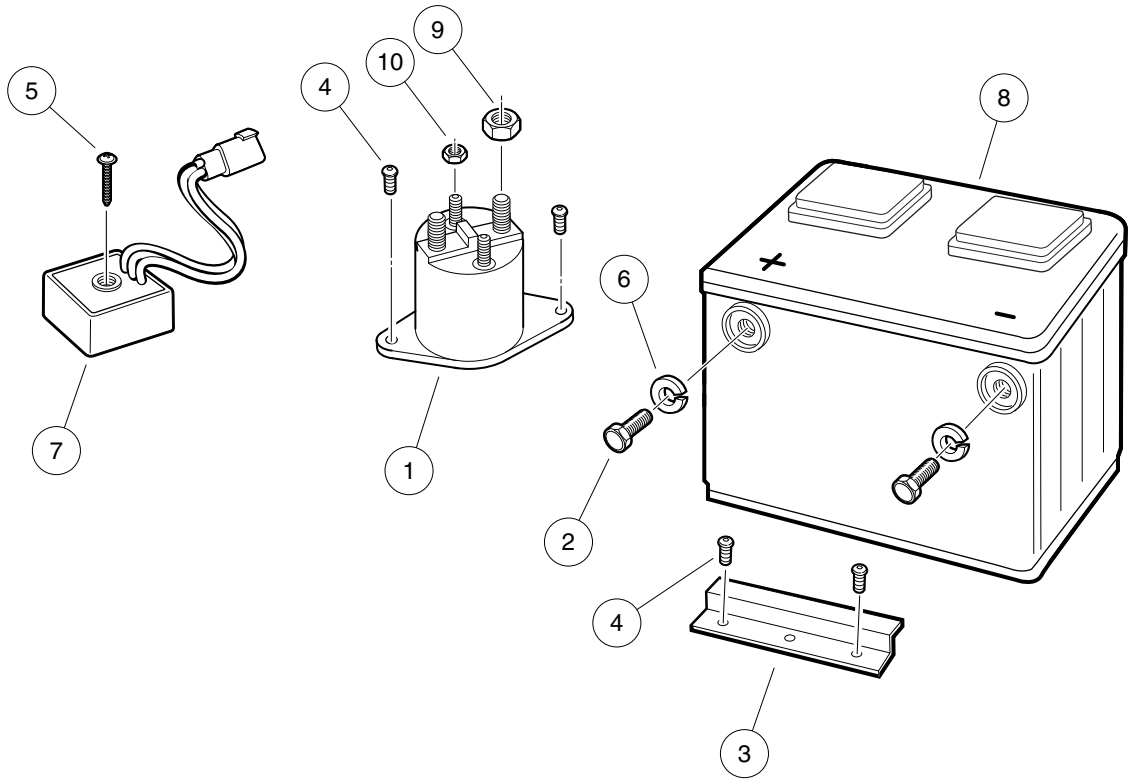

001057-001

SIDE-POST BATTERY, SOLENOID, VOLTAGE REGULATOR – EFI

ITEM	PART NO.	DESCRIPTION	QTY
		1 2 3 4	
1	1013609	Solenoid, 12-Volt	1
2	1014375	Screw, 3/8-16 X 0.50, Stainless Steel, Hex-Head	2
3	101898001	Clamp, Battery	1
4	102296020	Screw, Torx Pan Hd Pt, M6 X 20	4
5	102296040	Screw, Torx Pan Hd Pt, M6 X 40	1
6	102355301	Lockwasher, 3/8 Split Ss	2
7	102803301	Asm, Voltage Regulator, Prec.	1
8	103496801	Battery, Start, 12v	1
9	1242	Nut, 5/16-18 Hex	2
10	7893	Nut, #10-32 Hex	2

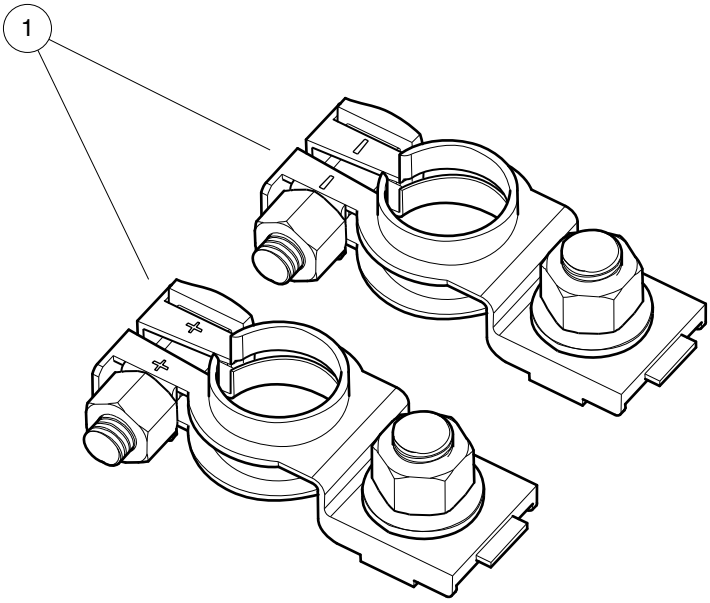

001066-001

KIT, BATTERY TERMINAL ADAPTER (SIDE-POST TO TOP-POST) – EFI

ITEM	PART NO.	DESCRIPTION	QTY
1	105266401	1 2 3 4 Kit, Term Adaptor, G26 Batt	A/R

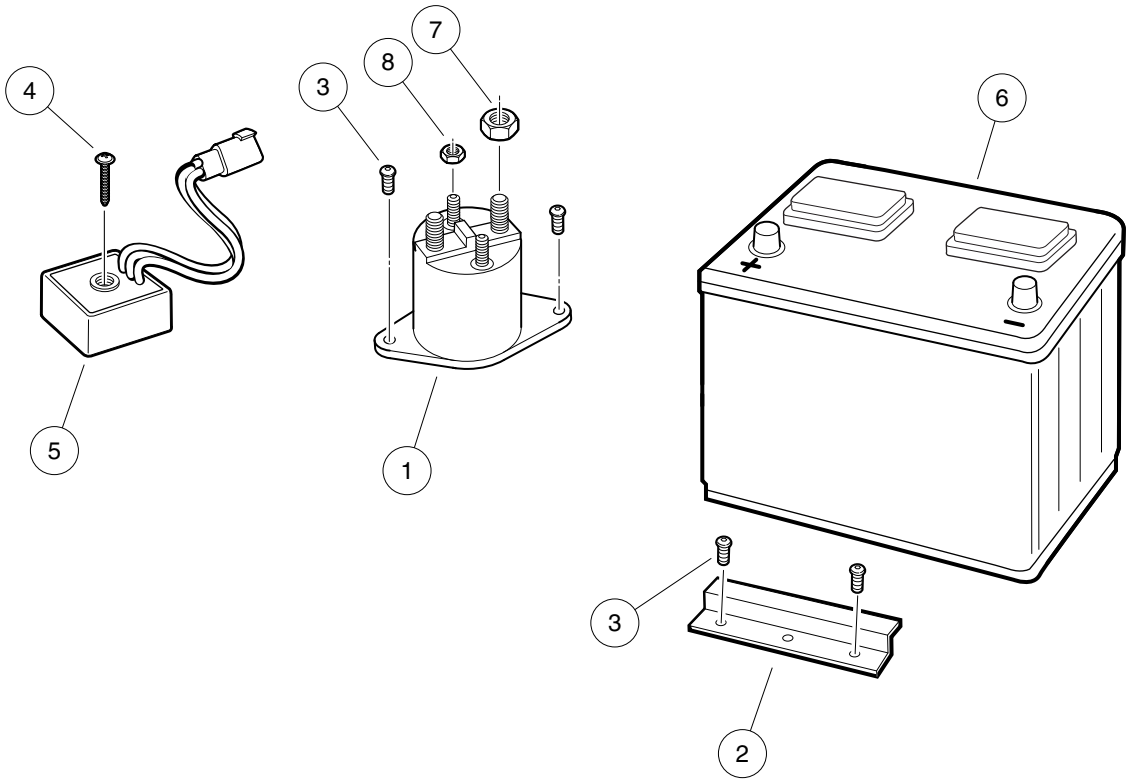

001067-001

TOP-POST BATTERY, SOLENOID, VOLTAGE REGULATOR – EFI

ITEM	PART NO.	DESCRIPTION	QTY
		1 2 3 4	
1	1013609	Solenoid, 12-Volt	1
2	101898001	Clamp, Battery	1
3	102296020	Screw, Torx Pan Hd Pt, M6 X 20	4
4	102296040	Screw, Torx Pan Hd Pt, M6 X 40	1
5	102803301	Asm, Voltage Regulator, Prec.	1
6	105237399	Battery, Start, 12v, G 26, Sp	1
7	1242	Nut, 5/16-18 Hex	2
8	7893	Nut, #10-32 Hex	2

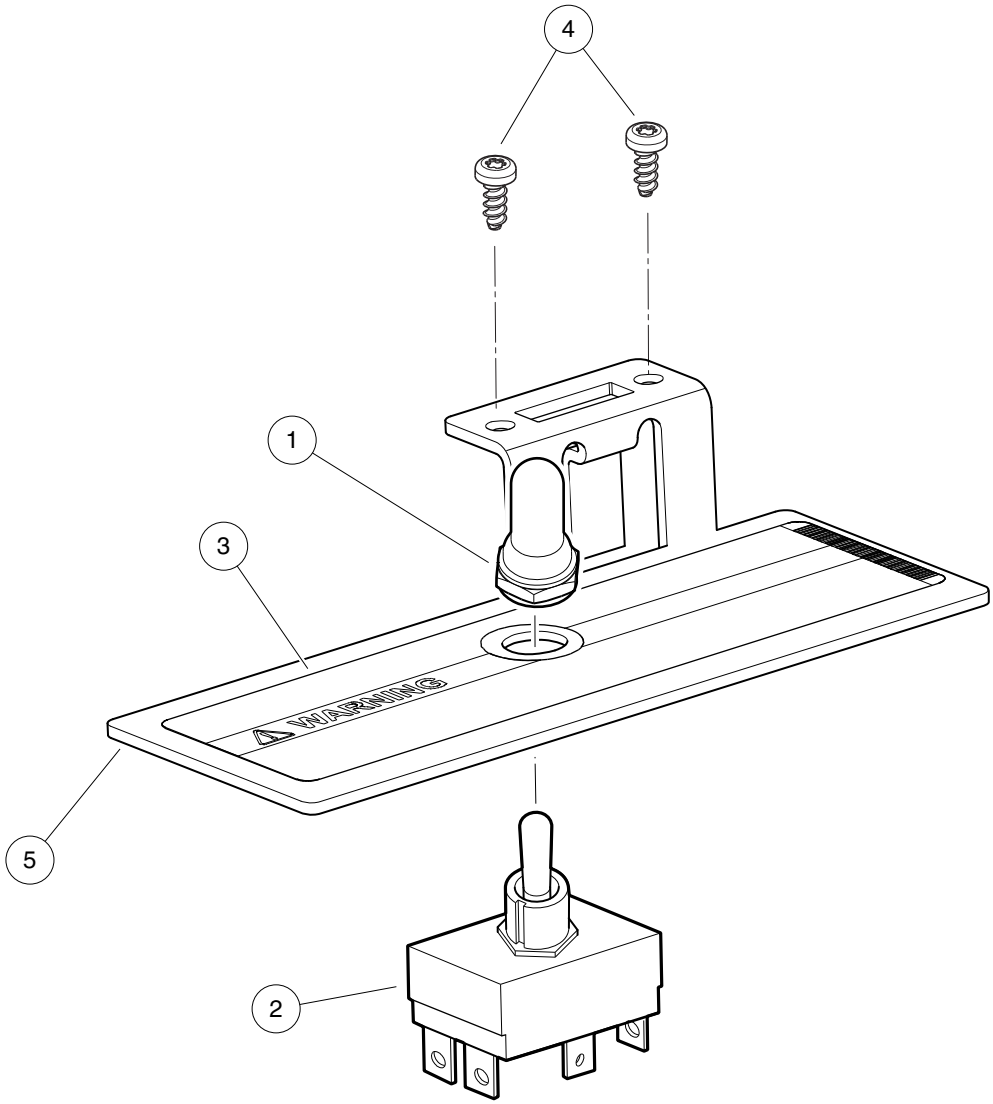

001058-001

OPERATION AND MAINTENANCE SWITCH

ITEM	PART NO.	DESCRIPTION	QTY
		1 2 3 4	
1	101908401	Boot, Switch	1
2	103198401	Switch, Toggle, SPDT	1
3	103205501	Decal, Run/Service Switch	1
4	N/A	Screw, #6 X .75, Cs Ss, Hi-lo	2
5	105136501	Brkt, Hinge And Serv Switch	1

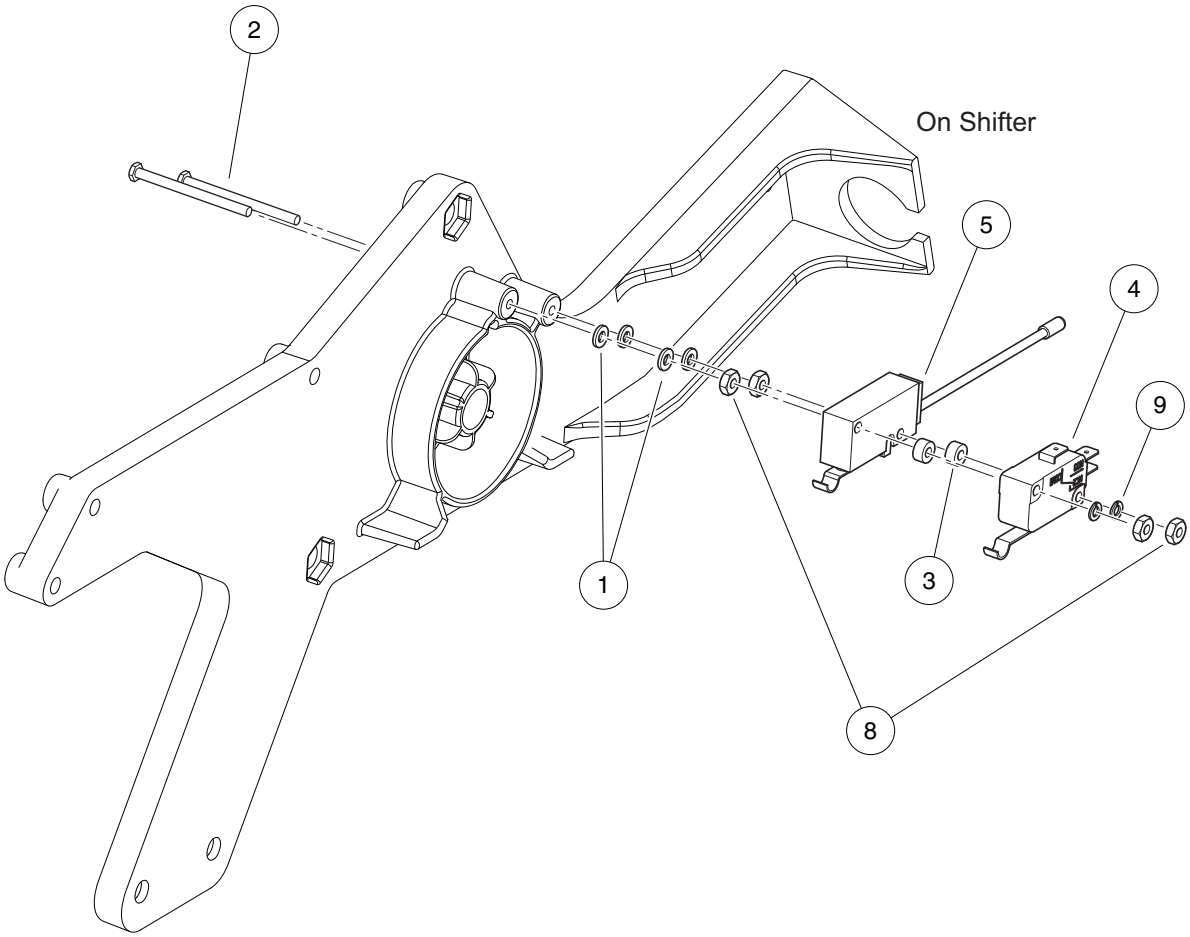

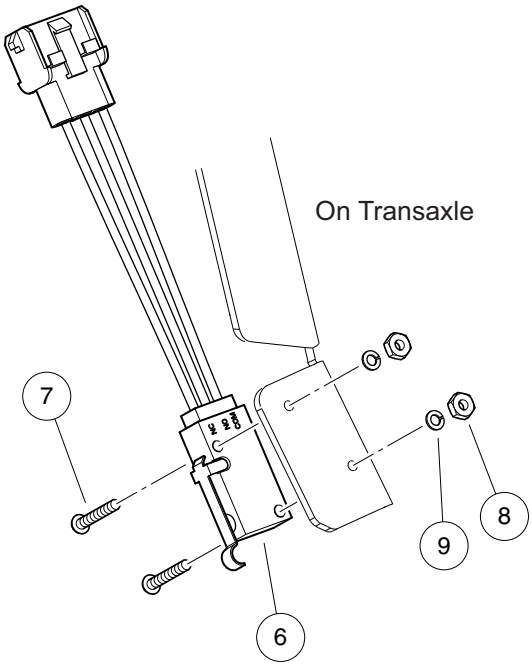

001013-001

FORWARD/REVERSE SHIFTER SWITCHES – EFI

ITEM	PART NO.	DESCRIPTION	QTY
		1 2 3 4	
1	1012431	Washer, #4 Flat	4
2	1012594	Screw, #4-40 Machine	2
3	1014727	Washer, Flat, #4, Nylon	2
4	1014807	Switch, Limit	1
5	101979101	Switch, Limit, Assembly, Sealed	1
6	105102601	Switch, Limit, Sealed, with 3-Wire Lead	1
7	8056	Screw, #4-40 X 0.75 Round-Head Machine	2
8	8057	Nut, #4-40 Hex Machine	6
9	8058	Lockwasher, #4 Split	4

ENGINE – SUBARU EX40

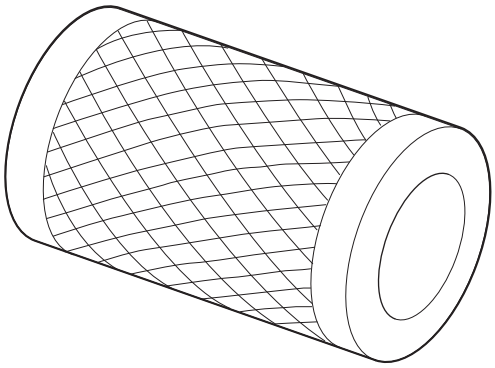

1

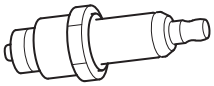

2

000992-003

TUNE-UP PARTS – SUBARU EX40

ITEM	PART NO.	DESCRIPTION	QTY
		1 2 3 4	
1	102558201	Air Filter, 4 Inch	1
2	105017801	Spark Plug, Subaru EX40	1

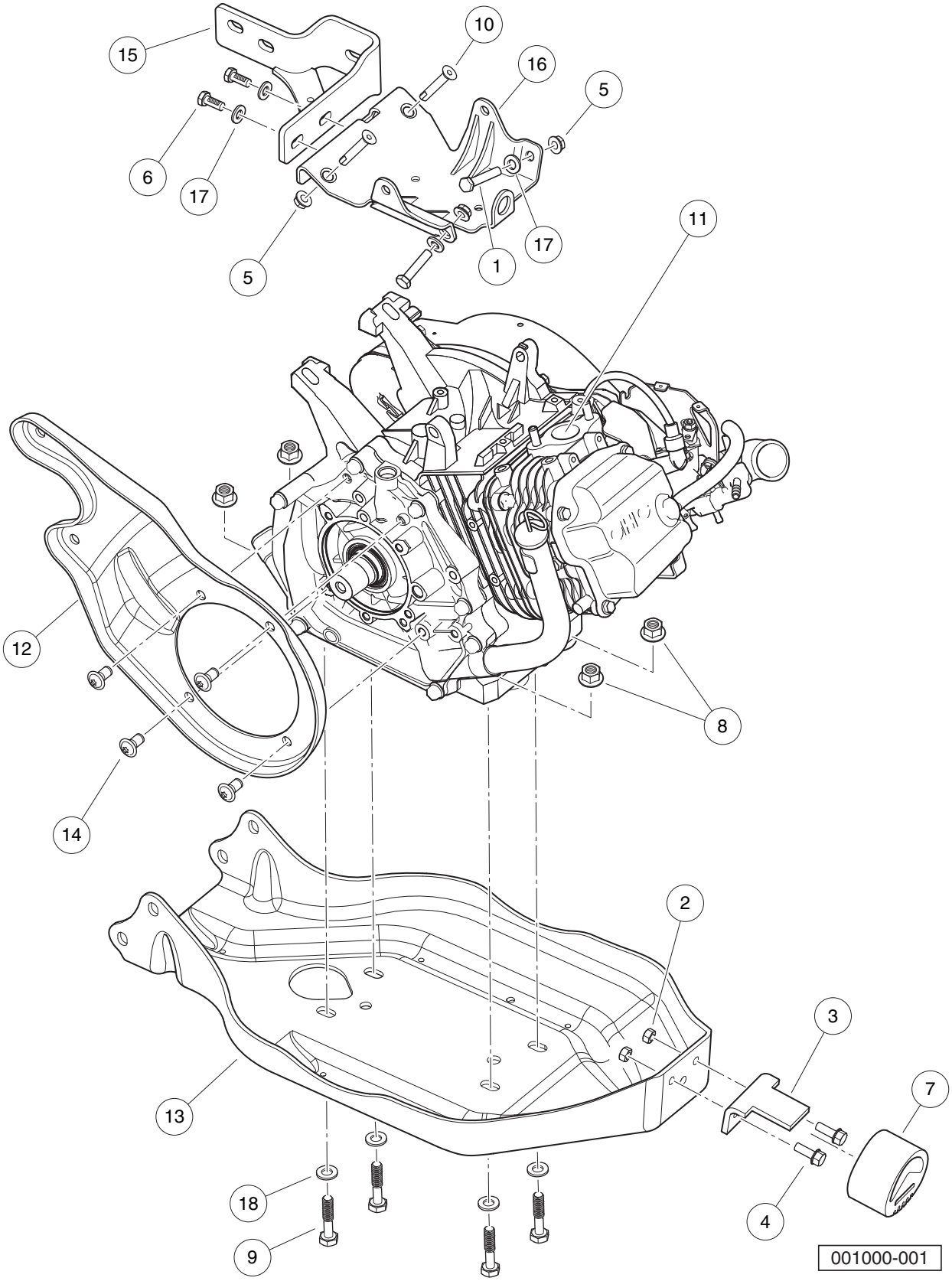
15
10
16
5
6
17
5
1
17
11
12
8
14
2
3
7
13
18
4
9
001000-001

ENGINE AND ENGINE MOUNTING, PRECEDENT – TO EARLY-2016 MODEL YEAR

ITEM	PART NO.	DESCRIPTION	QTY
		1 2 3 4	
1	1010577	Bolt, Hex-Head, 5/16-18 X 1.50	2
2	1013924	Nut, 5/16-24, Hex Head Cone	2
3	101834601	Bracket, Snubber	1
4	101884801	Screw, 5/16-24 X 0.875, Grade-8	2
5	101963401	Locknut, 5/16-18 Hex Flange	4
6	102242101	Screw, 5/16-18 X 3/4 Hex-Head with Patch	2
7	102540301	Snubber, Inner Frame	1
8	102617201	Nut, Flanged, M10 X 1.5, Mechanically Deformed	4
9	102732401	Bolt, M10 X 45, Zn-Ni (Black)	4
10	103196202	5/16-18x1.75, Bolt, Loctite	2
11	103882801	Engine, Gas, Subaru EX40, EFI	1
12	103979401	Plate, Mounting, CVT, Center	1
13	103982201	Plate, Engine/Axle Mounting	1
14	103996201	Screw, 3/8-16 X .75, Btn Hd Cap	4
15	105134601	Bracket, Mounting, Transaxle/Exhaust,†EX40	1
16	105149301	Bracket,†Mounting, Starter/Generator,†EX40	1
17	1241	Washer, 5/16 Type A Flat	4
18	96741046	Washer, M10, Hard	4

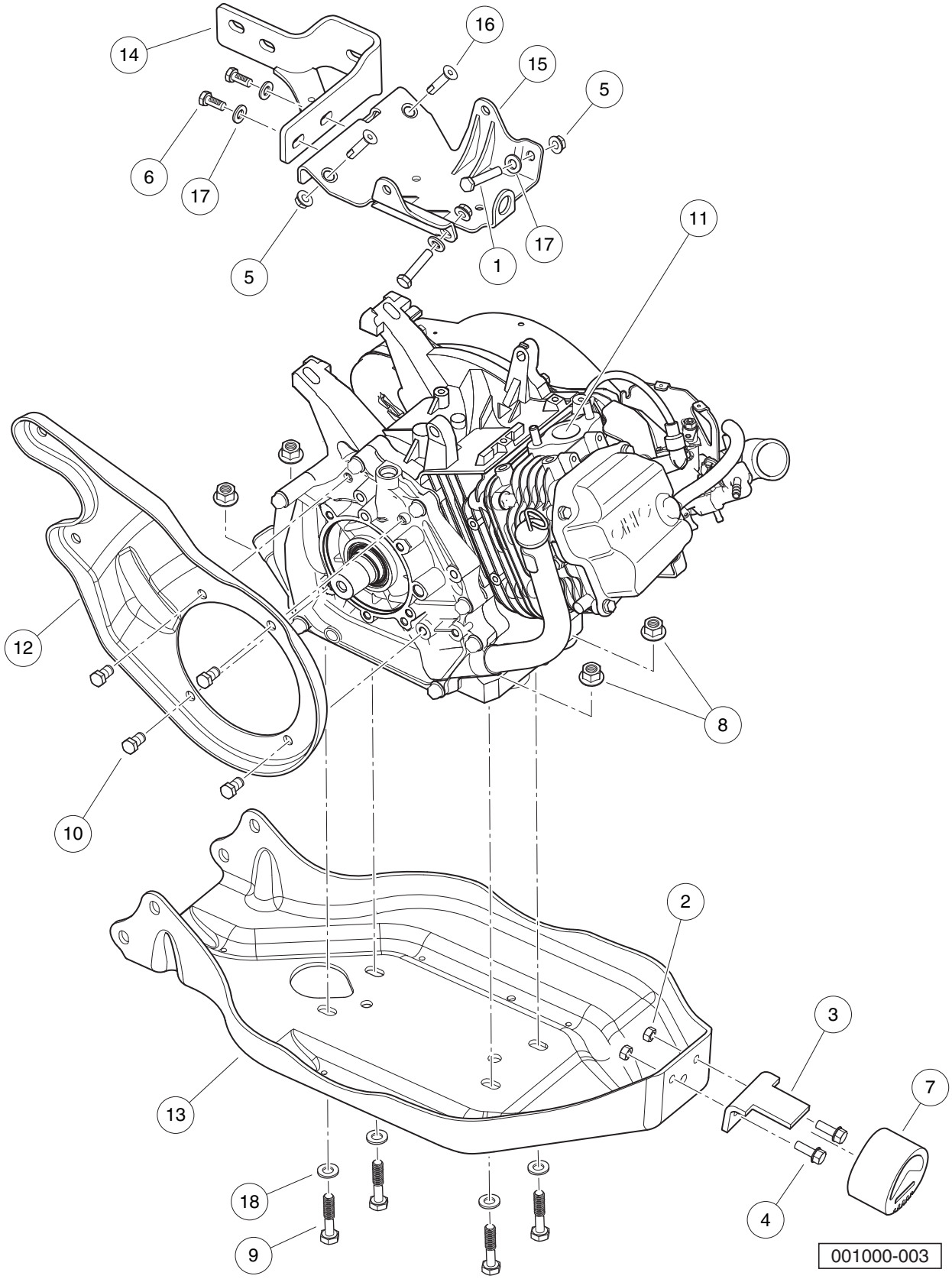
14
16
15
5
6
17
5
1
17
11
12
8
10
2
3
7
13
18
4
9
001000-003

ENGINE AND ENGINE MOUNTING, PRECEDENT – FROM EARLY-2016 MODEL YEAR

ITEM	PART NO.	DESCRIPTION	QTY
		1 2 3 4	
1	1010577	Bolt, Hex-Head, 5/16-18 X 1.50	2
2	1013924	Nut, 5/16-24, Hex Head Cone	2
3	101834601	Bracket, Snubber	1
4	101884801	Screw, 5/16-24 X 0.875, Grade-8	2
5	101963401	Locknut, 5/16-18 Hex Flange	4
6	102242101	Screw, 5/16-18 X 3/4 Hex-Head with Patch	2
7	102540301	Snubber, Inner Frame	1
8	102617201	Nut, Flanged, M10 X 1.5, Mechanically Deformed	4
9	102732401	Bolt, M10 X 45, Zn-Ni (Black)	4
10	103508101	Bolt, 3/8-16 X .75 Lock Patch	4
11	103882801	Engine, Gas, Subaru EX40, EFI	1
12	103979401	Plate, Mounting, CVT, Center	1
13	103982201	Plate, Engine/Axle Mounting	1
14	105134601	Bracket, Mounting, Transaxle/Exhaust,†EX40	1
15	105149301	Bracket,†Mounting, Starter/Generator,†EX40	1
16	105262401	Screw, 5/16-18 X 1.25, Cs, Lck	2
17	1241	Washer, 5/16 Type A Flat	4
18	96741046	Washer, M10, Hard	4

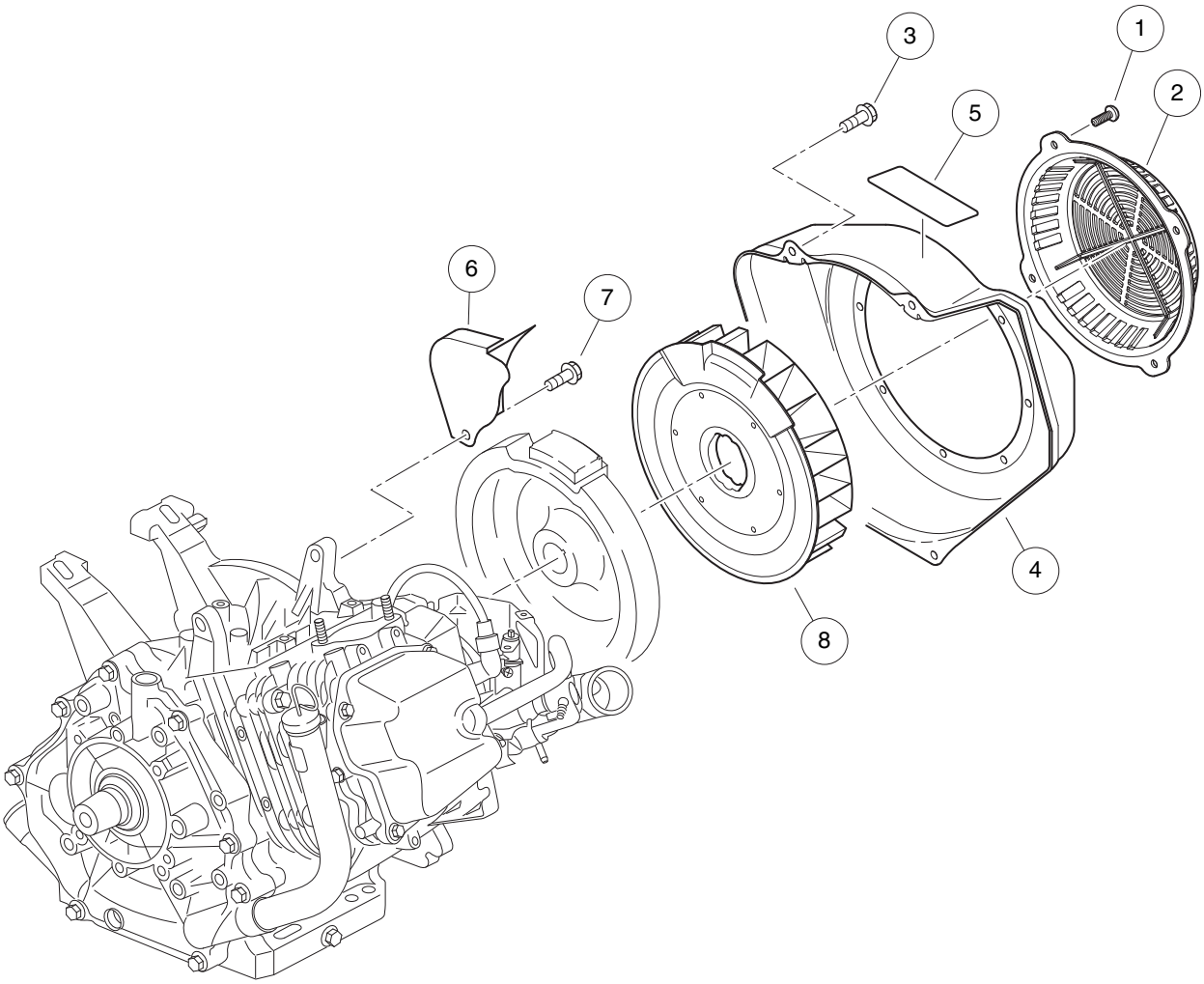

001001-001

FAN AND SHROUD – EX40

ITEM	PART NO.	DESCRIPTION	QTY
		1 2 3 4	
1	1015969	Screw, M6-1.00 X 10mm, Pan Hd	4
2	103995901	Cover, Fan, EX40	1
3	105012601	Bolt, Flange, M6x1.0x12, EX40	4
4	105016701	Housing, Fan, EX40	1
5	105016801	Label, Engine Warning, EX40	1
6	105016901	Baffle, Crankcase, EX40	1
7	105017001	Bolt, Baffle, M8x1.25x12 Ex40	1
8	105017101	Fan, Cooling, EX40	1

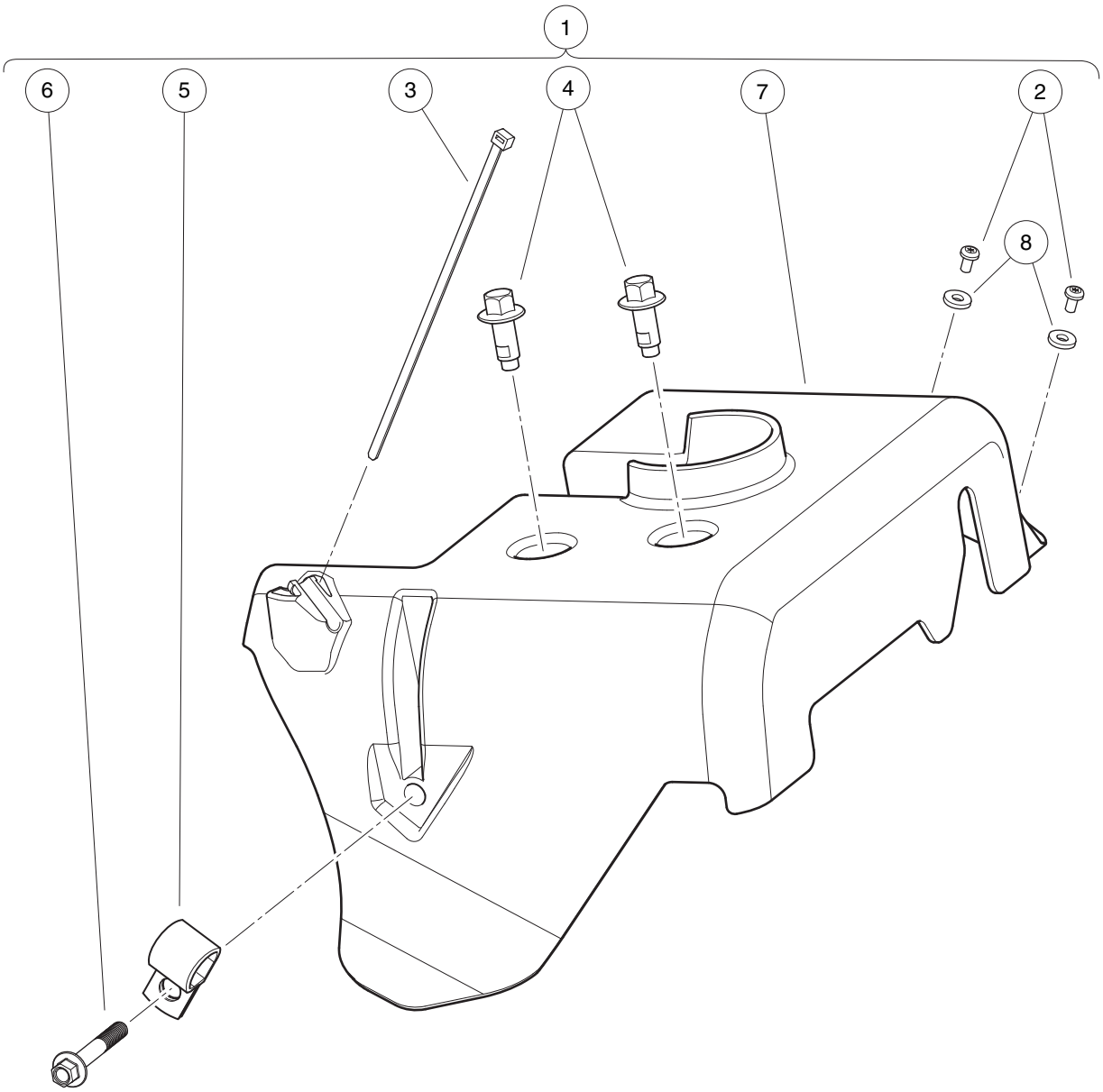

001002-001

AIR DEFLECTOR – EX40

ITEM	PART NO.	DESCRIPTION	QTY
		1 2 3 4	
1	105084801	Kit, Air Deflector, Subaru EX40 (includes items 2 through 8)	1
2	1016103	Screw, Pan Hd Tx, Taptite 6-32	2
3	101824101	Tie Wrap, Black	1
4	102298116	Bolt, Flanged Head, M8 X 16.0	2
5	102410604	P-clamp, Insulated, 0.625 Inch	1
6	102541402	Bolt, M6x1.0x40, Hex Flange Head, Blk-l	1
7	105075301	Deflector, Air, Subaru EX40	1
8	7591	Washer, #6, Flat	2

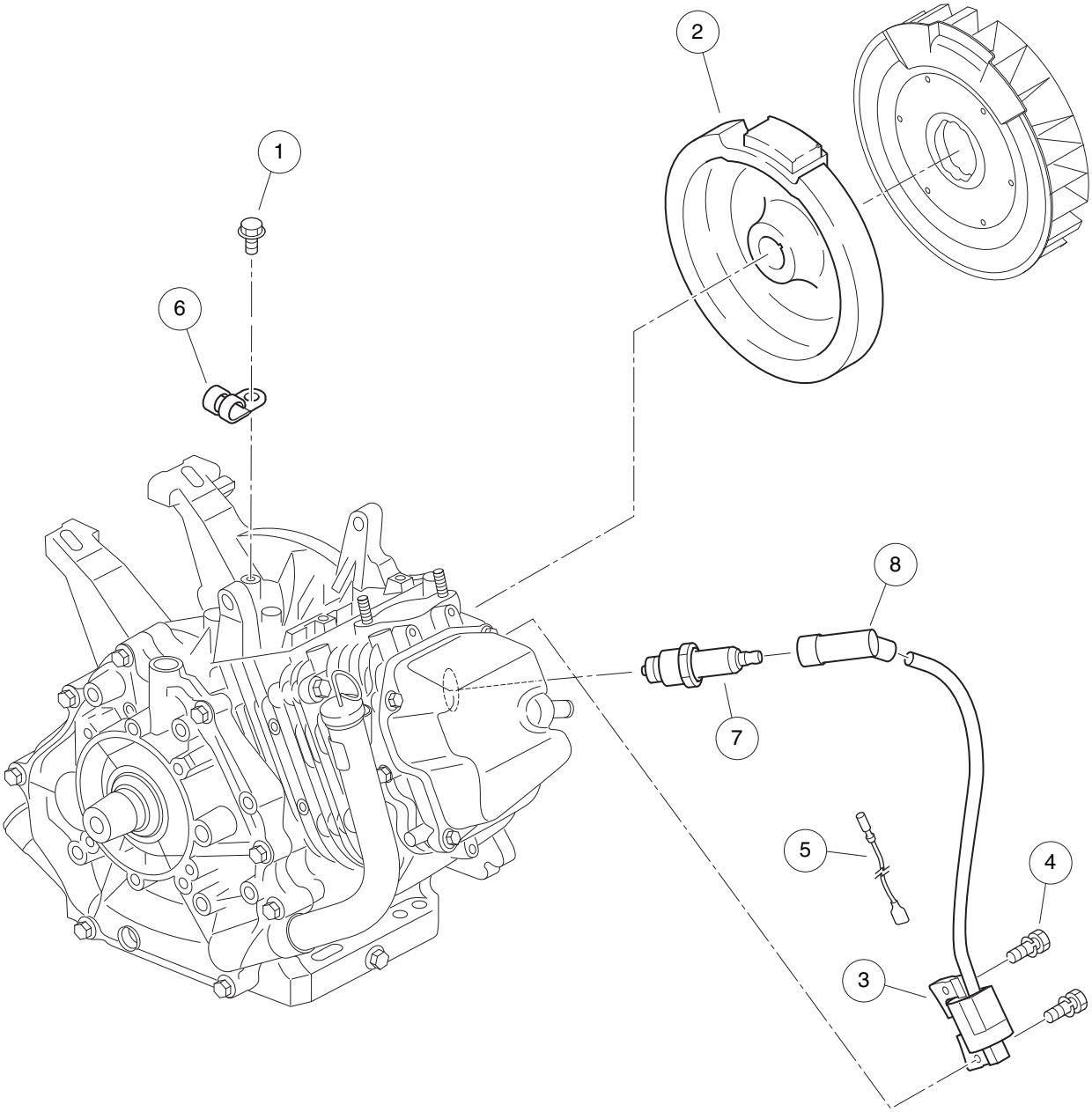

001003-001

IGNITION COMPONENTS AND FLYWHEEL – EX40

ITEM	PART NO.	DESCRIPTION	QTY
		1 2 3 4	
1	105016001	Bolt, Flange, M6x1.0x8, EX40	1
2	105017301	Flywheel, EX40	1
3	105017401	Coil, Ignition, CDI, EX40	1
4	105017501	Asm, Bolt-Washer, Coil, EX40	2
5	105017601	Asm, Wire, Coil Control, EX40	1
6	105017701	Clamp, Coil Control Wire, EX40	1
7	105017801	Spark Plug, Subaru EX40	1
8	105017901	Cap, Spark Plug, EX40	1

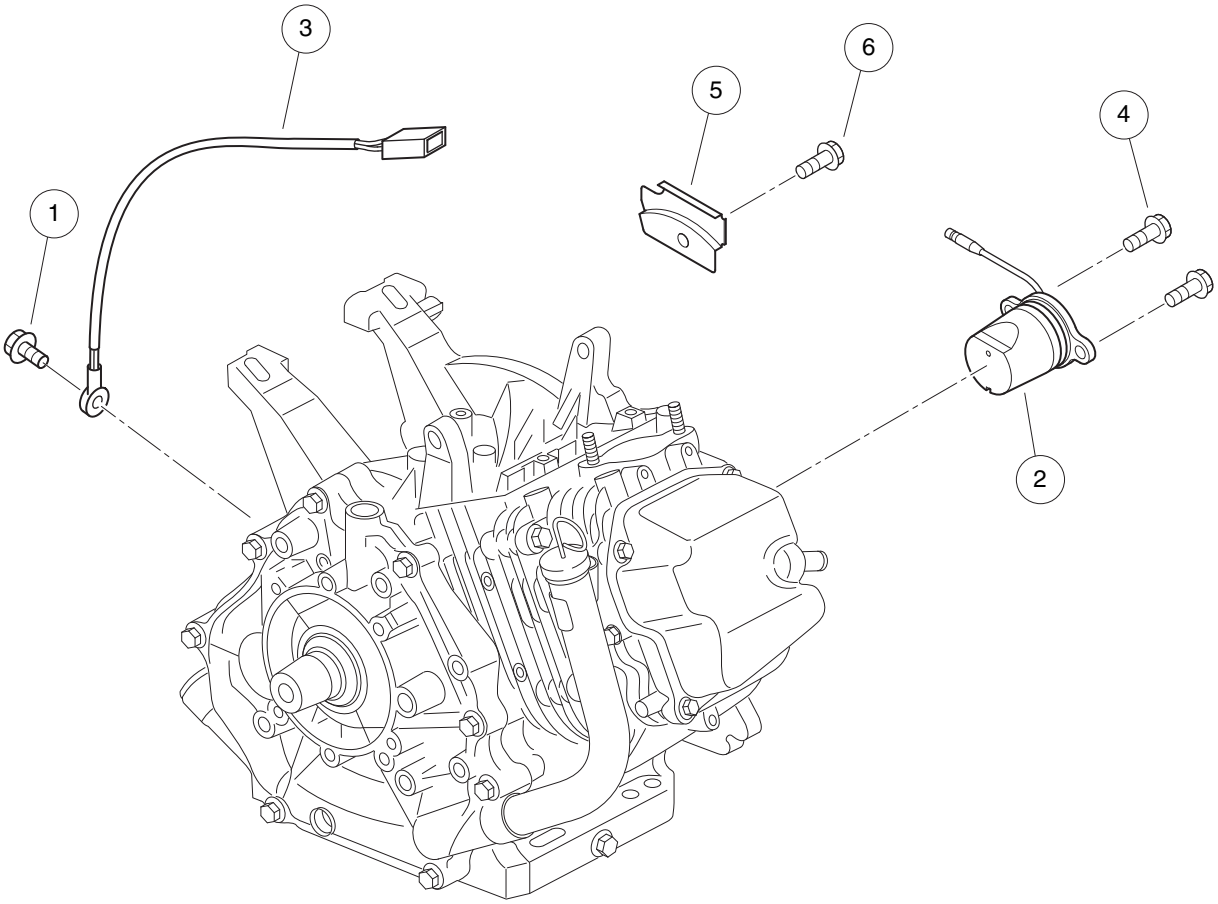

001004-001

ITEM	PART NO.	DESCRIPTION	QTY
		1 2 3 4	
1	105012601	Bolt, Flange, M6x1.0x12, EX40	1
2	105018001	Sensor, Oil Level, EX40	1
3	105018101	Sensor, Temperature, EX40	1
4	105018201	Bolt, Oil Sensor, M6x1.0x14, EX40	2
5	105018301	Clamp, Oil Sensor Wire, EX40	1
6	105018401	Bolt, Tap, Oil Wire Clamp, EX40	1

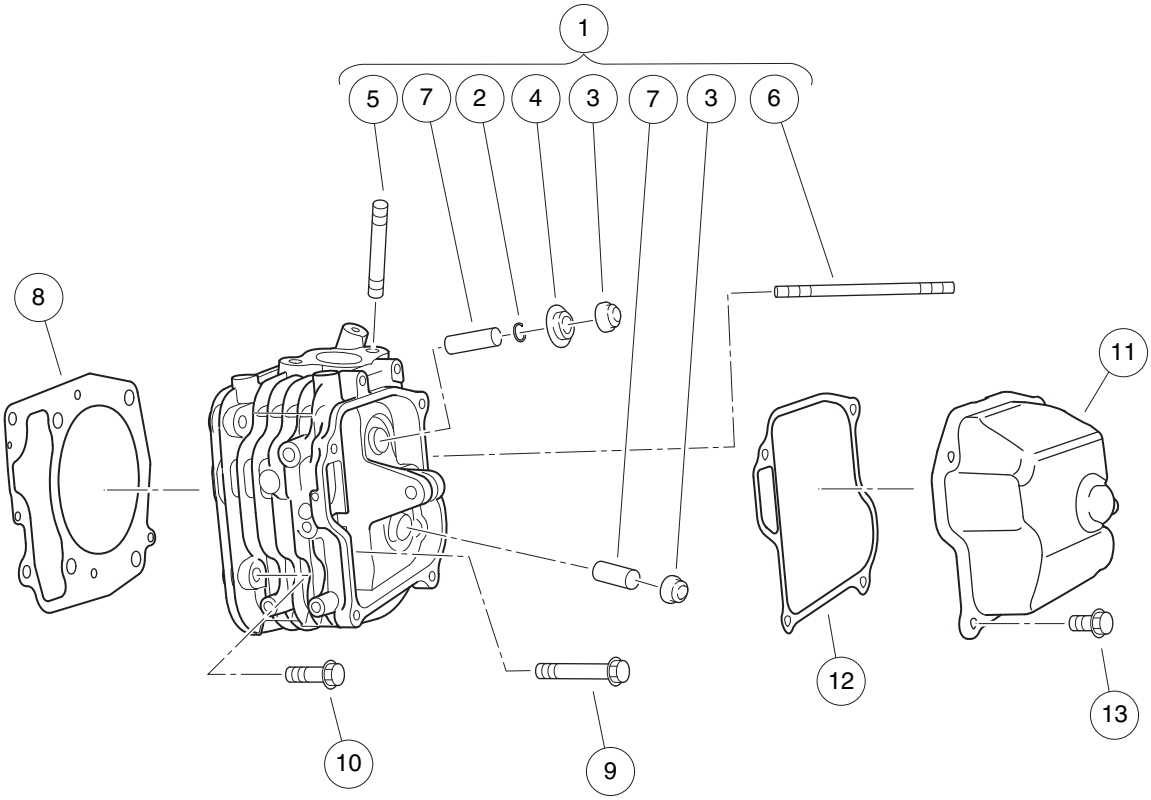

001005-001

CYLINDER HEAD – EX40

ITEM	PART NO.	DESCRIPTION	QTY
		1 2 3 4	
1	105011901	Asm, Cylinder Head, EX40 (includes items 2 through 7)	1
2	105010101	Clip, Retainer Plate, EX40	1
3	105010201	Seal, Valve, EX40	2
4	105010301	Plate, Retainer, EX40	1
5	105010801	Stud, Mounting, Exhaust, EX40	2
6	105010901	Stud, Mounting, Intake, EX40	2
7	105018501	Guide, Valve, EX40	2
8	105012001	Gasket, Head, EX40	1
9	105012101	Bolt, Head, M10x1.25x75, EX40	4
10	105012201	Bolt, Head, M8x1.25x35, EX40	2
11	105012301	Cover, Rocker, EX40	1
12	105012401	Gasket, Rocker Cover, EX40	1
13	105012601	Bolt, Flange, M6x1.0x12, EX40	4

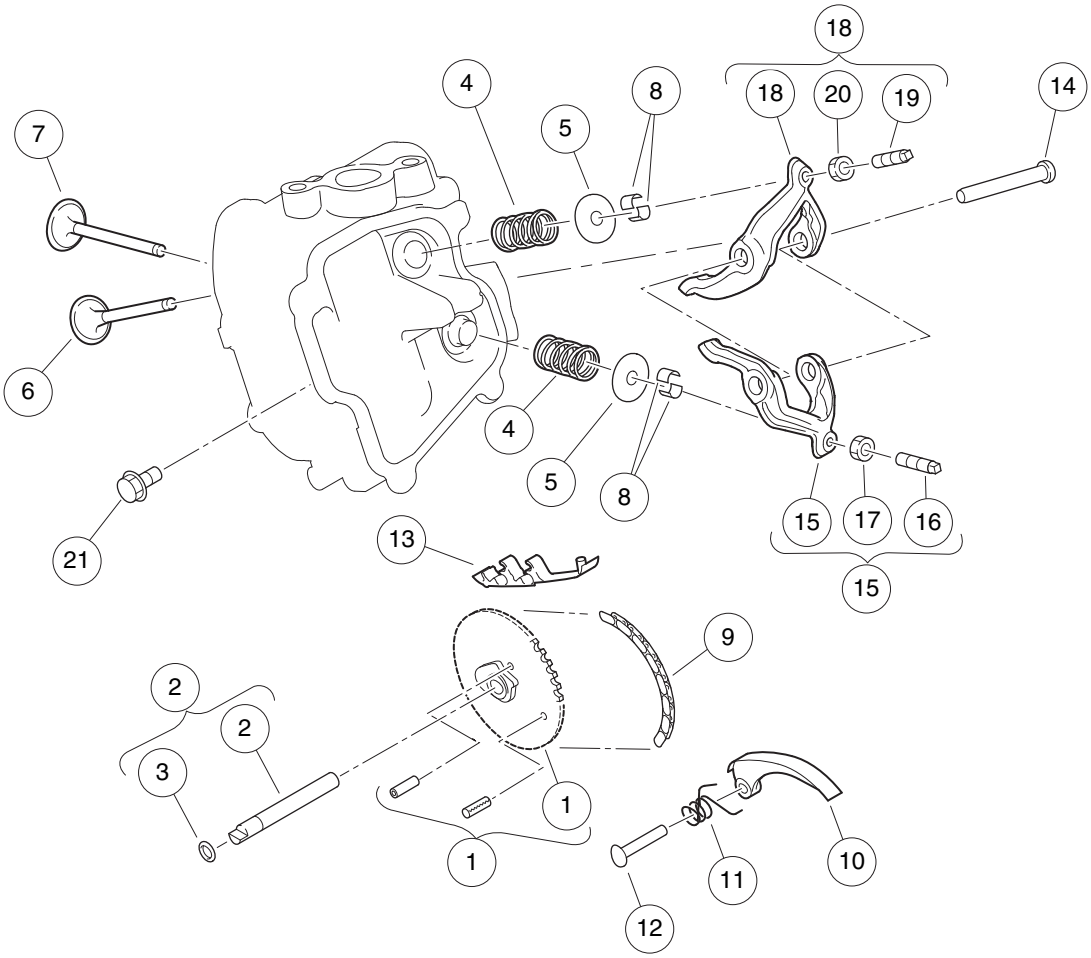

001006-001

VALVETRAIN AND TIMING CHAIN – EX40

ITEM	PART NO.	DESCRIPTION	QTY
		1 2 3 4	
1	105014201	Asm, Cam/Chain Sprocket, EX40	1
2	105014301	Asm, Camshaft and O-ring, EX40 (includes item 3)	1
3	105014401	O-ring, Camshaft, EX40	1
4	105014501	Spring, Valve, EX40	2
5	105014601	Retainer, Spring, EX40	2
6	105014701	Valve, Intake, EX40	1
7	105014801	Valve, Exhaust, EX40	1
8	105014901	Collet, Valve, EX40	4
9	105015001	Chain, Timing, EX40	1
10	105015101	Tensioner, Chain, EX40	1
11	105015201	Spring, Tension, EX40	1
12	105015301	Pin, Tensioner, EX40	1
13	105015401	Guide, Chain, EX40	1
14	105015501	Shaft, Rocker, EX40	1
15	105015601	Asm, Rocker Arm, Intake, EX40 (includes items 16 and 17)	1
16	105015801	Screw, Adjust, Valve, EX40	1
17	105015901	Nut, Adjust, Valve, EX40	1
18	105015701	Asm, Rocker Arm, Exhaust, EX40 (includes items 19 and 20)	1
19	105015801	Screw, Adjust, Valve, EX40	1
20	105015901	Nut, Adjust, Valve, EX40	1
21	105016001	Bolt, Flange, M6x1.0x8, EX40	1

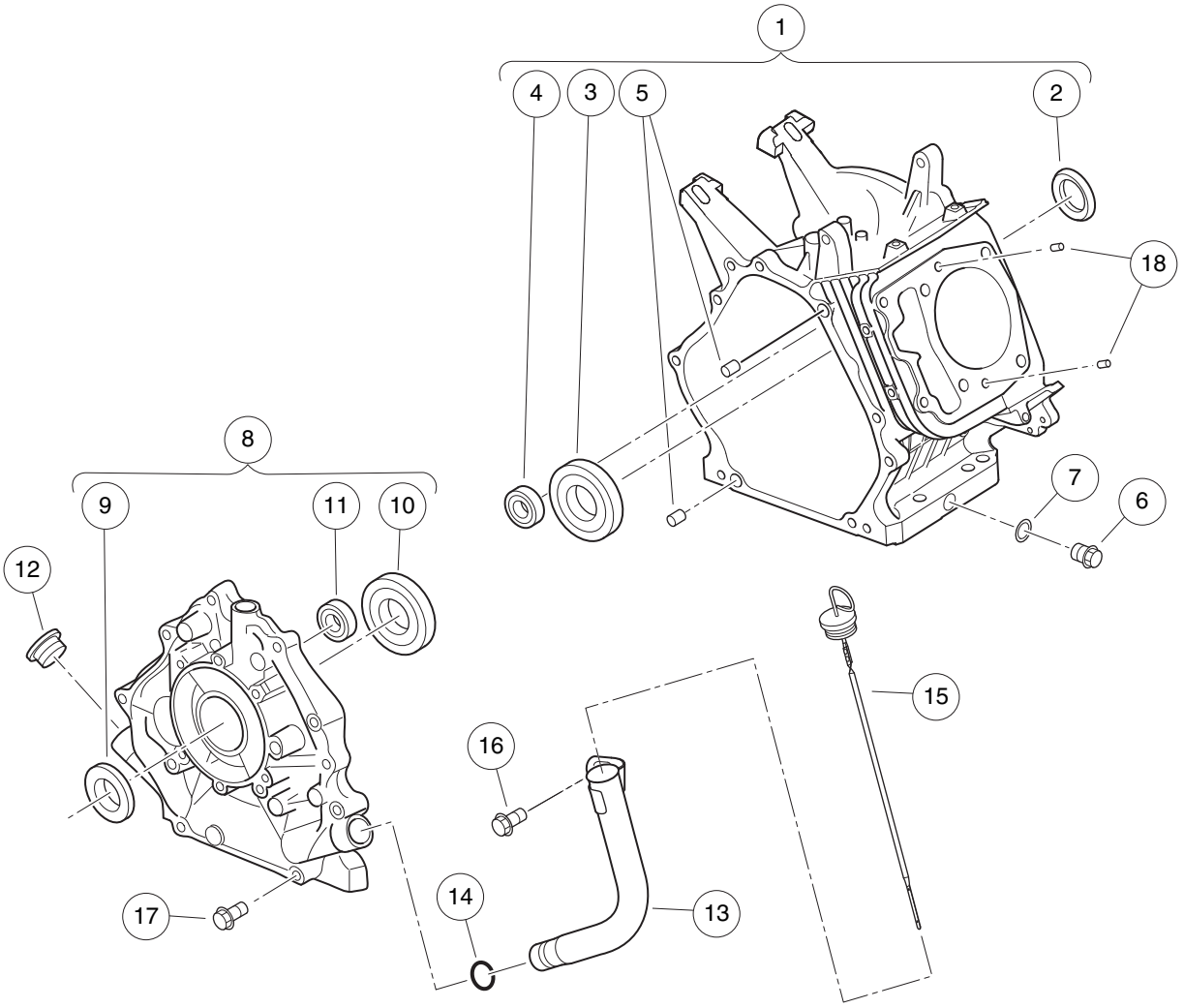

001007-001

CRANKCASE – EX40

ITEM	PART NO.	DESCRIPTION	QTY
		1 2 3 4	
1	105010001	Crankcase, EX40 (includes items 2 through 5)	1
2	105010401	Seal, Oil, Crankshaft, EX40	1
3	105010501	Bearing, Crankshaft, EX40	1
4	105010601	Bearing, Balance Shaft, EX40	1
5	105010701	Pin, Guide, Crankcase, EX40	2
6	105011001	Plug, Oil Drain, EX40	2
7	105011101	Gasket, Oil Drain Plug, EX40	2
8	105011201	Asm, Cover, Crankcase, EX40 (includes items 9 through 11)	1
9	105010401	Seal, Oil, Crankshaft, EX40	1
10	105010501	Bearing, Crankshaft, EX40	1
11	105010601	Bearing, Balance Shaft, EX40	1
12	105011301	Plug, Rubber, Crankcase, EX40	1
13	105011401	Tube, Oil Filler, EX40	1
14	105011501	O-ring, Oil Filler Tube, EX40	1
15	105011601	Dipstick, EX40	1
16	105011701	Bolt, Filler Tube, M8x1.25x12, EX40	1
17	105011801	Bolt, Case Cover, M8x1.25x38, EX40	8
18	105012501	Pin, Guide, Head, EX40	2

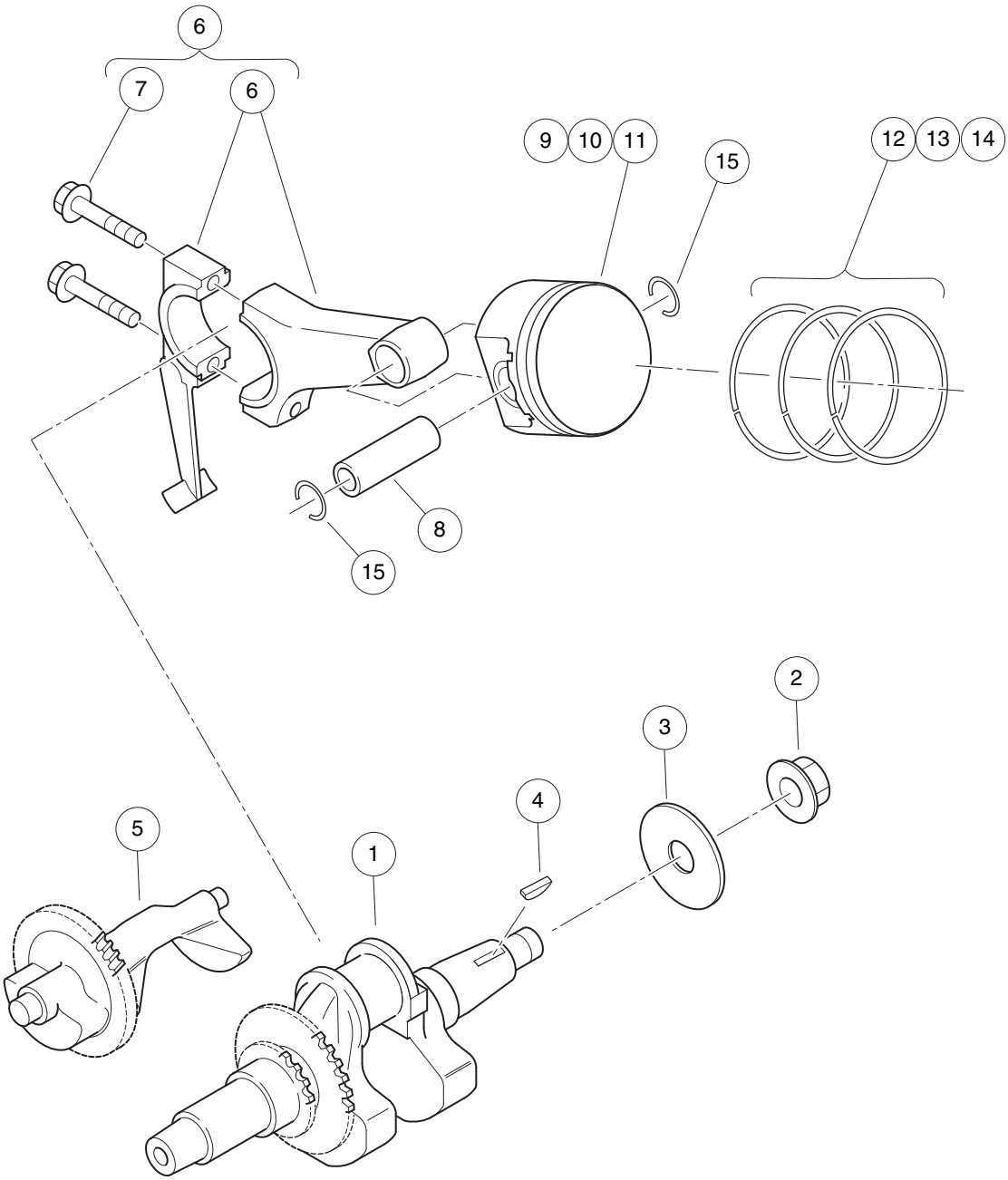

001008-001

CRANKSHAFT AND PISTON – EX40

ITEM	PART NO.	DESCRIPTION	QTY
		1 2 3 4	
1	105012701	Crankshaft, EX40	1
2	105012801	Nut, Crankshaft M18x1.5 Ex40	1
3	105012901	Washer, Crankshaft Ex40	1
4	105013001	Key, Woodruff, Crankshaft, EX40	1
5	105013101	Shaft, Balance, EX40	1
6	105013201	Asm, Rod, Connecting, EX40 (includes item 7)	1
7	105013301	Bolt, Rod M8x1.25x40 Ex40	2
8	105013401	Pin, Piston, EX40	1
9	105013501	Piston, Standard, EX40	1
10	105013601	Piston, 0.25 mm Oversize, EX40	1
11	105013701	Piston, 0.50 mm Oversize, EX40	1
12	105013801	Set, Piston Ring, Standard, EX40	1
13	105013901	Set, Piston Ring, 0.25 mm Oversize, EX40	1
14	105014001	Set, Piston Ring, 0.50 mm Oversize, EX40	1
15	105014101	Clip, Piston Pin, EX40	2

8

G

FUEL SYSTEM, EFI – SUBARU EX40

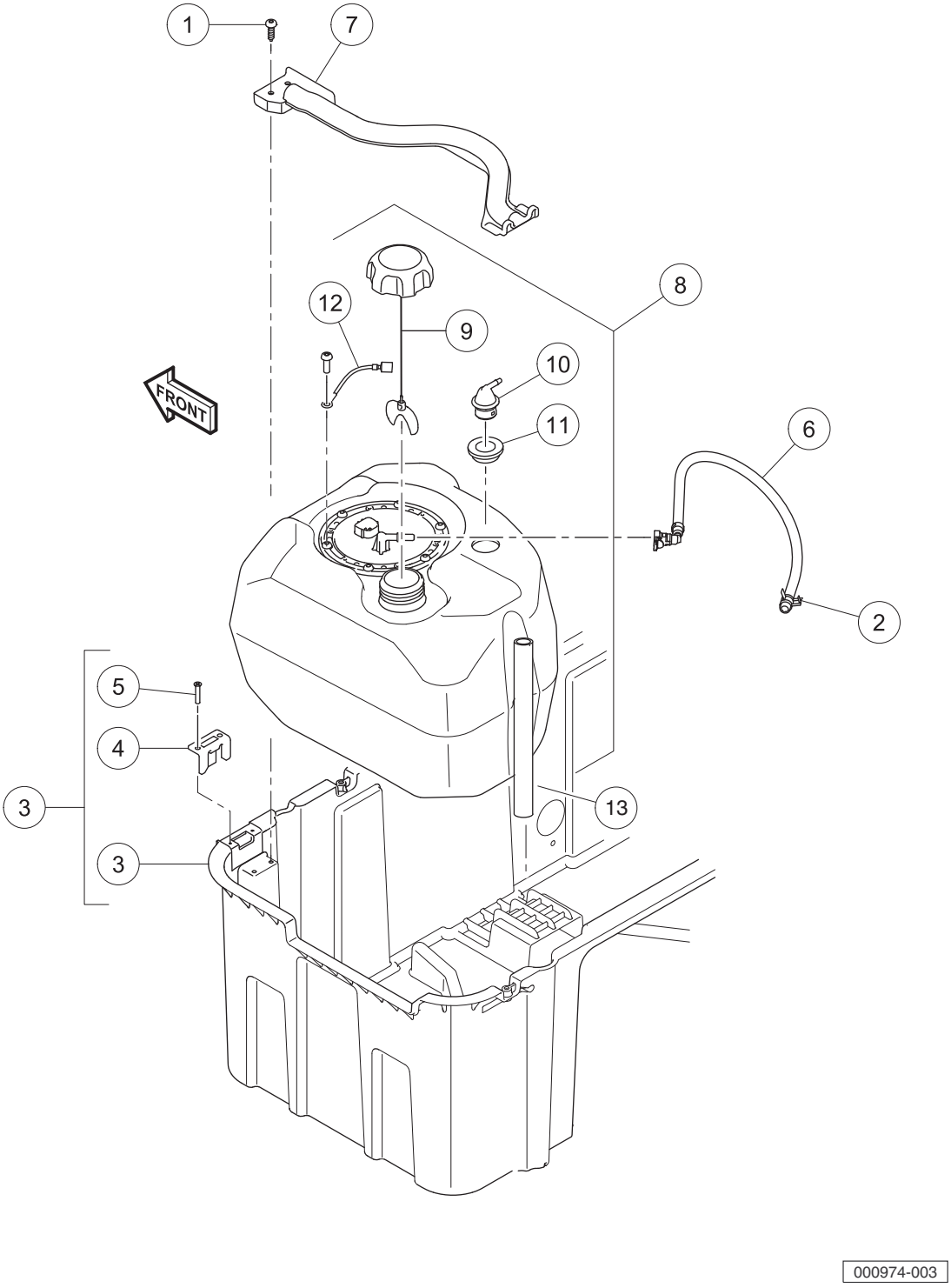
1
7
8
12
9
10
11
6
FRONT
2
5
4
3
3
13
000974-003

FUEL SYSTEM W/O SENDING UNIT – EFI

ITEM	PART NO.	DESCRIPTION	QTY
		1 2 3 4	
1	102296020	Screw, Torx Pan Hd Pt, M6 X 20	2
2	102411203	Clamp, Hose, Ctb 14mm Dia.	1
3	102514702	Bucket, Gas, Precedent with EFI (includes items 4 and 5)	1
4	103470701	Bracket, Bucket Hinge	1
5	N/A	Screw, #6 X .75, Cs Ss, Hi-lo	2
6	105043601	Asm, Fuel Line, Precedent	1
7	105072201	Retainer, Tank	1
8	105215502	Asm, Tank, Fuel, Precedent, w/o Sending Unit (includes items 9 through 12)	1
9	103372101	Cap, Fuel Tank, Gas, Ratchet	1
10	103905201	Assembly, Vent, Fuel, 1/4 Inch O.D.	1
11	103944301	Grommet, Fuel Tank, Vent	1
12	105143301	Wire, Ground, Fuel Tank	1
13	47546044001	Tube, Retention	1

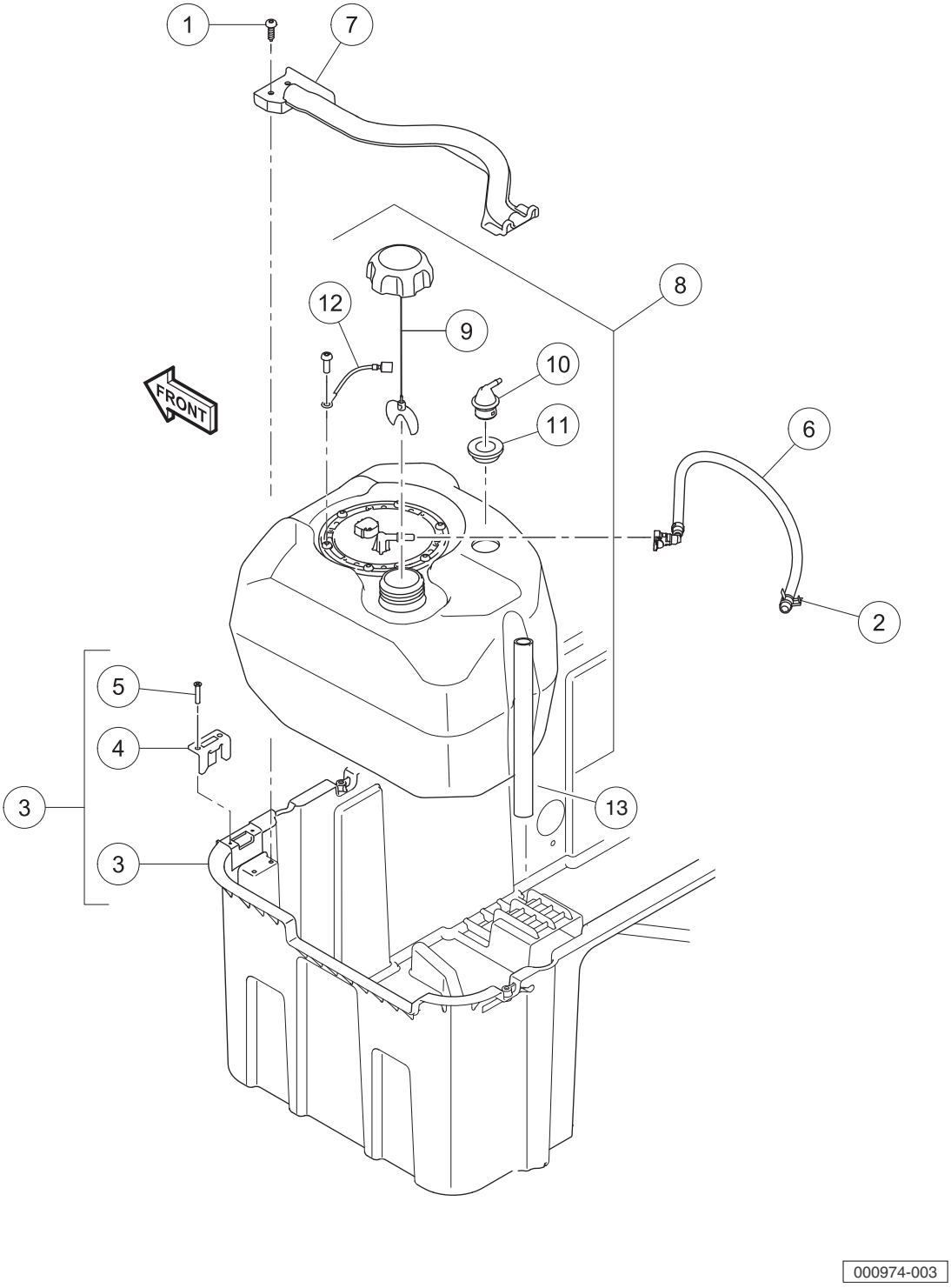
1
7
8
12
9
10
11
6
FRONT
2
5
4
3
3
13
000974-003

FUEL SYSTEM WITH SENDING UNIT – EFI

ITEM	PART NO.	DESCRIPTION	QTY
		1 2 3 4	
1	102296020	Screw, Torx Pan Hd Pt, M6 X 20	2
2	102411203	Clamp, Hose, Ctb 14mm Dia.	1
3	102514702	Bucket, Gas, Precedent with EFI (includes items 4 and 5)	1
4	103470701	Bracket, Bucket Hinge	1
5	N/A	Screw, #6 X .75, Cs Ss, Hi-lo	2
6	105043601	Asm, Fuel Line, Precedent	1
7	105072201	Retainer, Tank	1
8	105215501	Asm, Tank, Fuel, Precedent, w/Sending Unit (includes items 9 through 12)	1
9	103372101	Cap, Fuel Tank, Gas, Ratchet	1
10	103905201	Assembly, Vent, Fuel, 1/4 Inch O.D.	1
11	103944301	Grommet, Fuel Tank, Vent	1
12	105143301	Wire, Ground, Fuel Tank	1
13	47546044001	Tube, Retention	1

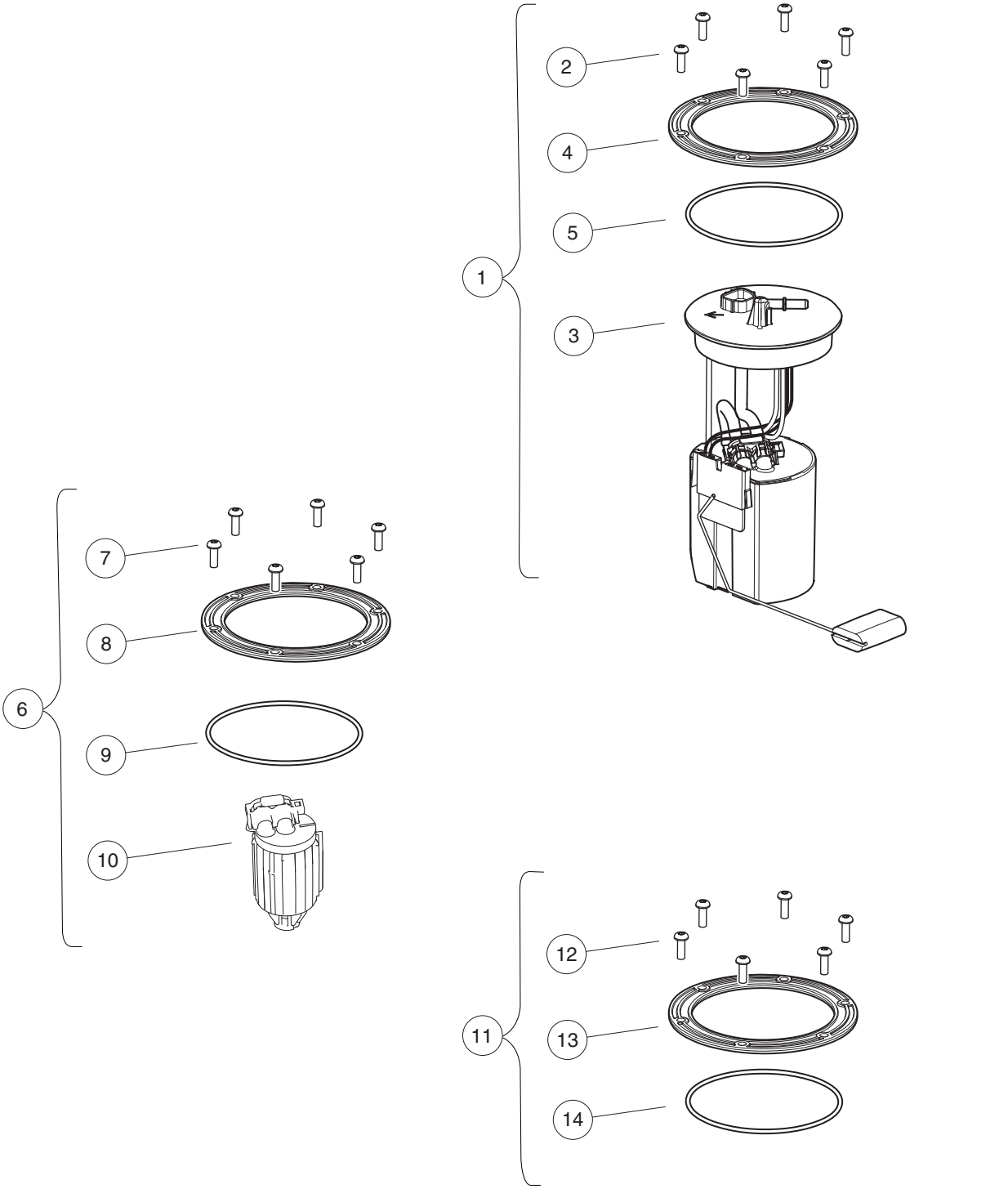
1
2
3
4
5
6
7
8
9
10
11
12
13
14
000977-005

ITEM	PART NO.	DESCRIPTION	QTY
		1 2 3 4	
1	105282901	Kit, Fuel Pump Module (includes items 2 through 5)	1
2	102025801	Screw, 1/4-20 X .75 Torx Pn Hd	6
3	105043401	Fuel Pump Module, with Sending Unit	1
4	105043801	Fuel Module, Hold Down Ring	1
5	105043901	O-Ring, Fuel Module	1
6	105282902	Kit, Fuel Filter (includes items 7 through 10)	1
7	102025801	Screw, 1/4-20 X .75 Torx Pn Hd	6
8	105043801	Fuel Module, Hold Down Ring	1
9	105043901	O-Ring, Fuel Module	1
10	105073001	Fuel Filter, EX40, EFI	1
11	105282903	Kit, O-ring (includes items 12 through 14)	1
12	102025801	Screw, 1/4-20 X .75 Torx Pn Hd	6
13	105043801	Fuel Module, Hold Down Ring	1
14	105043901	O-Ring, Fuel Module	1

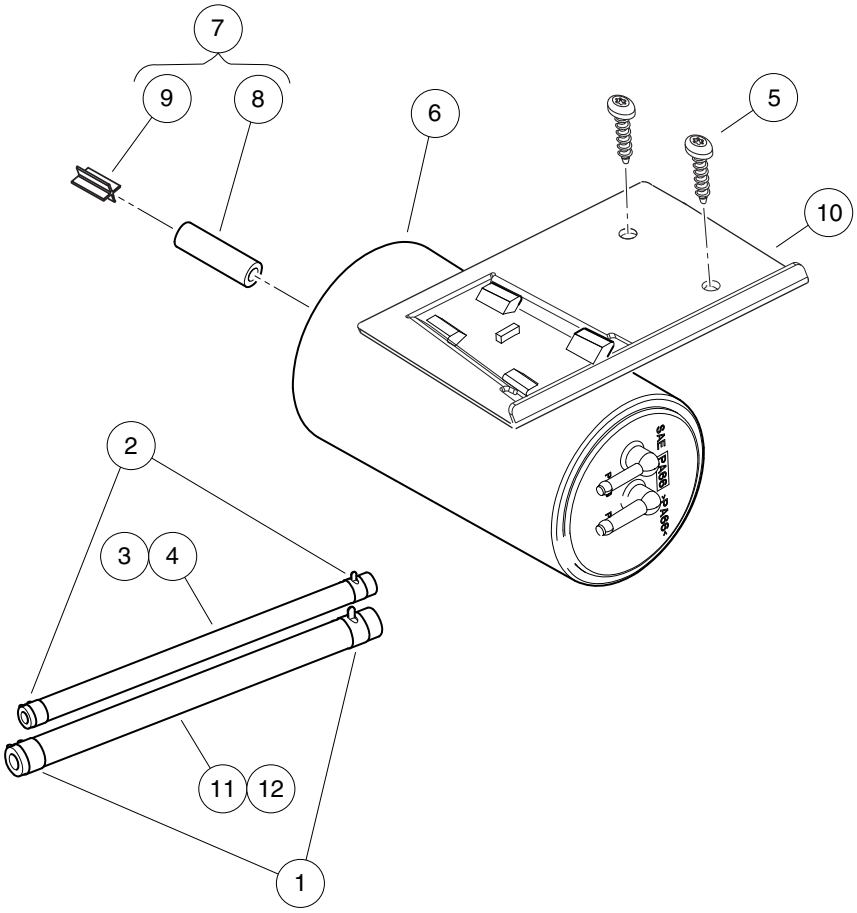

000980-004

CARBON CANISTER – EFI

ITEM	PART NO.	DESCRIPTION	QTY
		1 2 3 4	
1	1012649	Clamp, 0.460 Red Hose	2
2	1013746	Clamp, 0.301 ID Hose	2
3	101587704	Hose, Fuel, Vent, 3/16" ID, 17" Long (includes item 4)	1
4	1015137	Fuel Line, 3/16 (available by the foot)	A/R
5	102297230	Screw, M6, Torx, Interlock Thread	2
6	103372401	Canister, Carbon	1
7	103756401	Asm, Vent Line, Carbon Canister (includes items 8 and 9)	1
8	N/A	Hose, Vent, 5/16 I.D., Bulk	1
9	N/A	Vent, Barb, 5/16 I.D. Hose	1
10	103794501	Bracket, Carbon Canister	1
11	103896601	Hose, Vent, 1/4" ID, 9" Long (includes item 12)	1
12	102865101	Fuel Line, 1/4 (available by the foot)	A/R

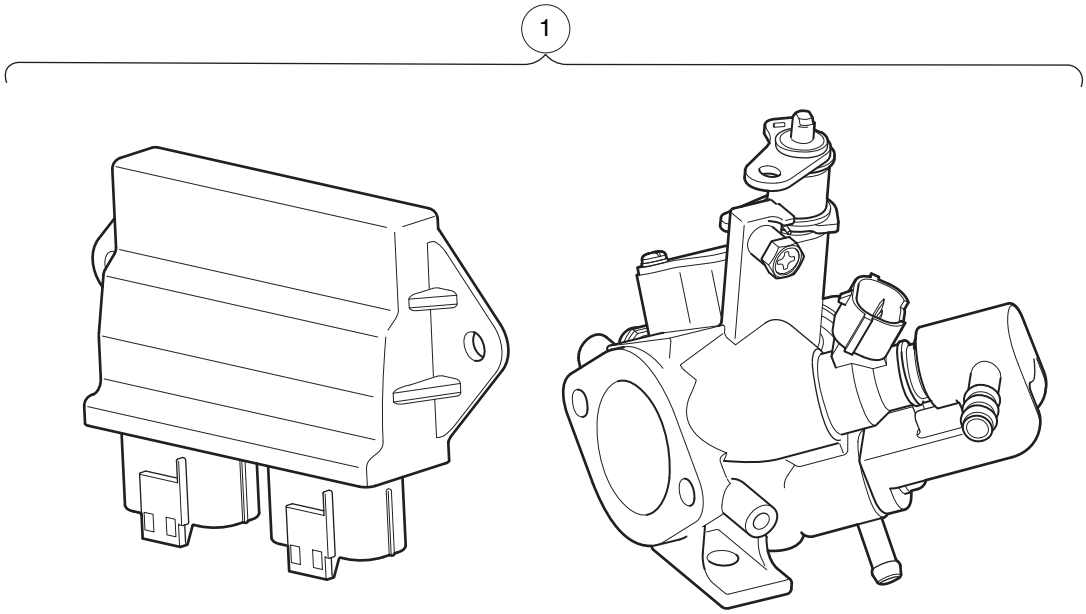

000964-001

ITEM	PART NO.	DESCRIPTION	QTY
1	105017201	1 2 3 4 Asm, Throttle Body/Fuel Injector with ECU, EX40	1

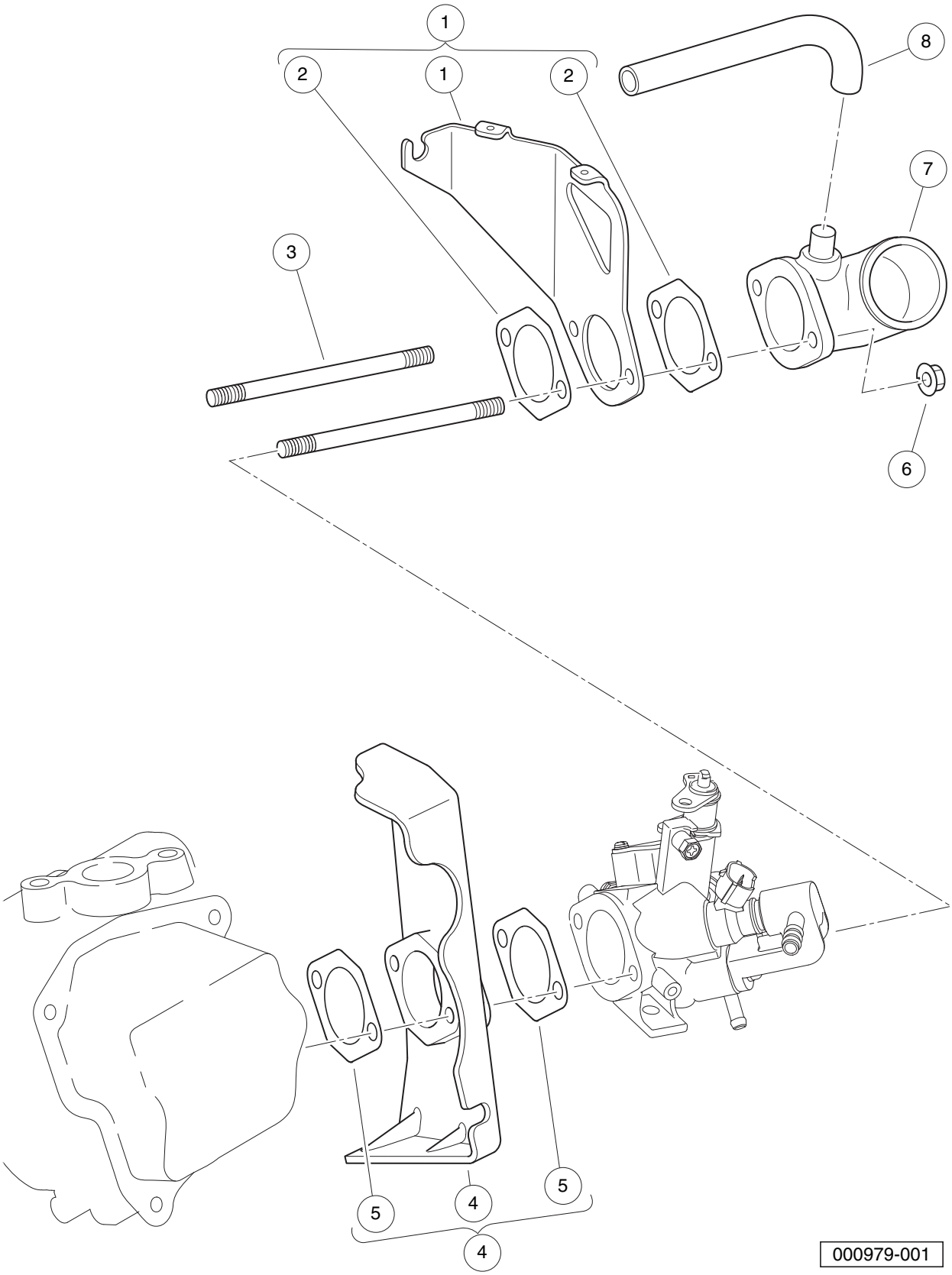
1
2
1
2
8
7
3
6
5
4
5
4
000979-001

THROTTLE BODY MOUNTING – EFI

ITEM	PART NO.	DESCRIPTION	QTY
		1 2 3 4	
1	103983501	Bracket, Operation, EX40 (includes item 2)	1
2	105016201	Gasket, Insulator, EX40	2
3	105010901	Stud, Mounting, Intake, EX40	2
4	105016101	Insulator, EX40 (includes item 5)	1
5	105016201	Gasket, Insulator, EX40	2
6	105016301	Nut, Intake Adapter, M6x1.0, EX40	2
7	105016401	Adapter, Air Intake, EX40	1
8	105016501	Hose, Breather, EX40	1

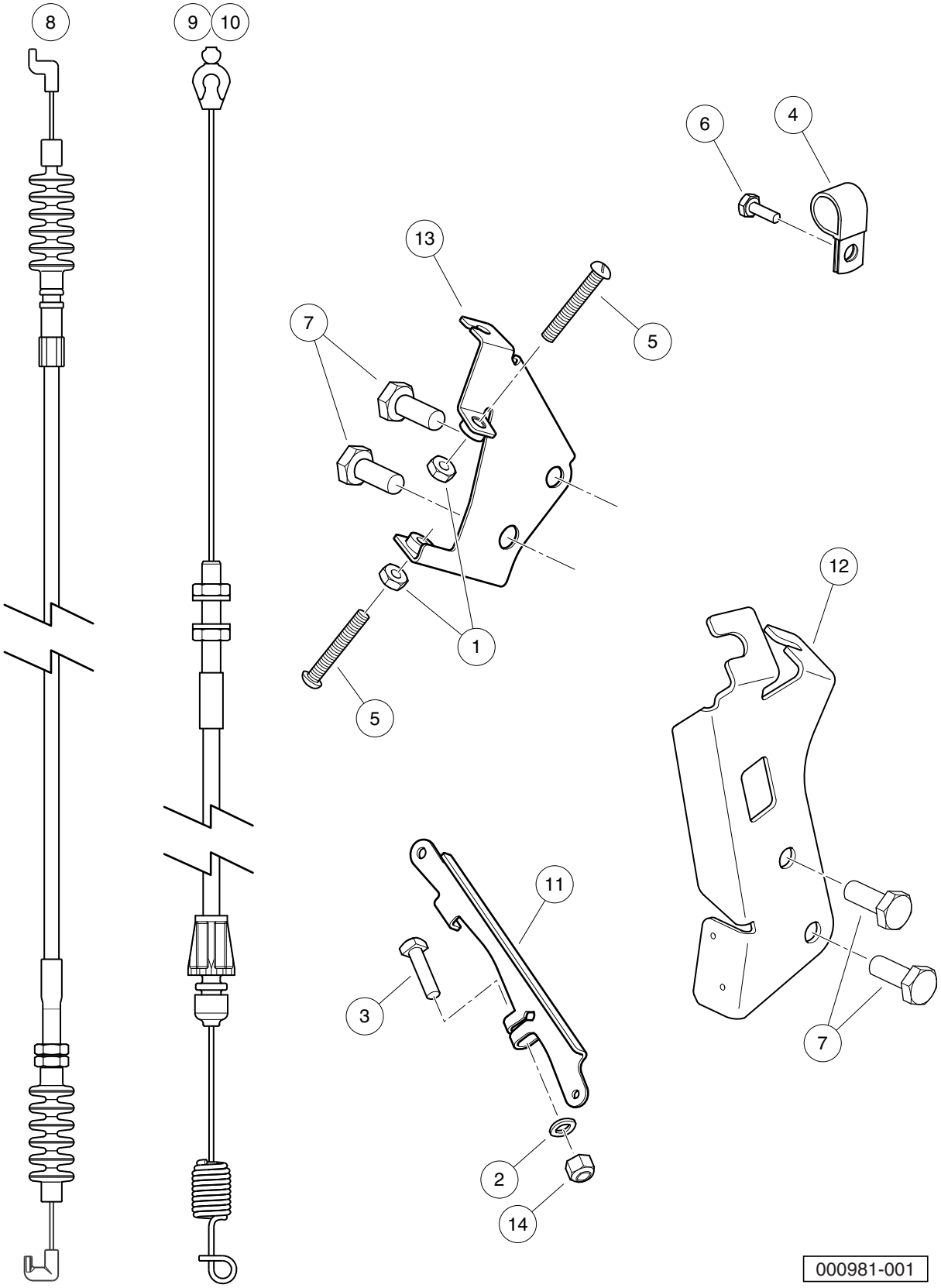
8
9
10
6
4
13
7
5
1
5
12
11
3
7
2
14
000981-001

GOVERNOR AND ACCELERATOR CABLES – EFI

ITEM	PART NO.	DESCRIPTION	QTY
		1 2 3 4	
1	1011114	Nut, M6-1.00 Hex	2
2	1014007	Washer, 1/4, Flat	1
3	101886101	Screw, 1/4-20 X 1.00, Square-Head	1
4	102410604	P-clamp, Insulated, 0.625 Inch	1
5	102476401	Bolt, Stop, Pedal	2
6	102490301	Bolt, M6 X 1 X 16, Loctite	1
7	102498201	Bolt, M10 X 1.25 X 25, Loctite	4
8	103978001	Cable, Governor, EX40	1
9	103982001	Cable, Accelerator, Precedent, Std Speed	1
10	103982002	Cable, Accelerator, Precedent, High Speed	1
11	104023501	Arm, Governor, ED65	1
12	105135101	Bracket, Cable, FNR/Accelerator, ED65	1
13	105144401	Weldment, Governor Bracket	1
14	8233	Locknut, 1/4-20, Nylon Insert	1

Note: Item 10 is only used with the Private Speed option.

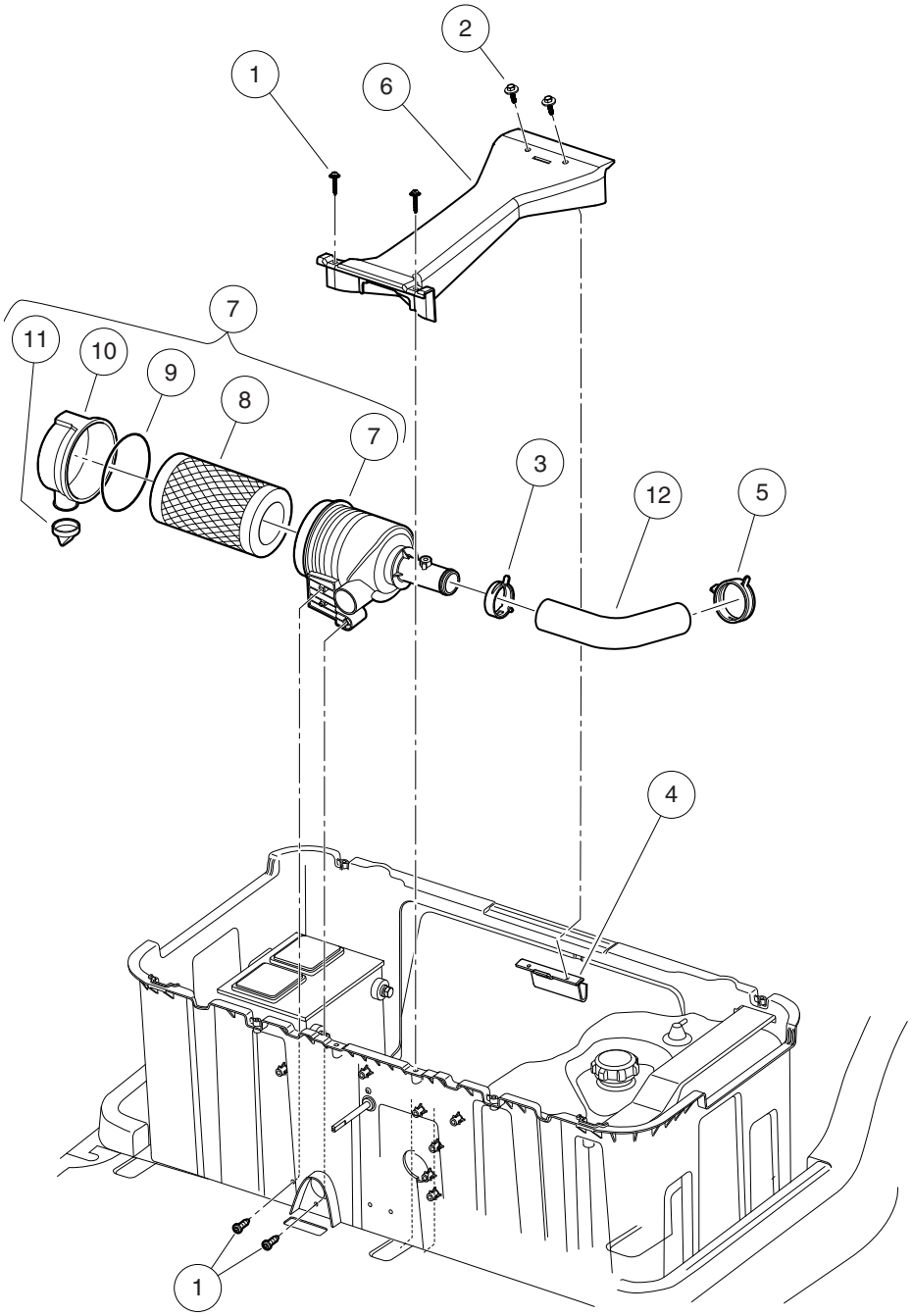

000484-003

AIR FILTER SYSTEM AND INTAKE HOSE – EFI

ITEM	PART NO.	DESCRIPTION	QTY
		1 2 3 4	
1	102296020	Screw, Torx Pan Hd Pt, M6 X 20	4
2	102297125	Screw, M6-1.0x25.4, Thread-Forming, SEMS	2
3	102411209	Clamp, Hose, Ctb 55mm Dia.	1
4	102521401	Support, Gas Bucket Brace	1
5	102558301	Clamp, Air Intake, Prec	1
6	103795001	Brace, Gas Fuel Bucket	1
7	105009001	Air Cleaner, Precedent with EFI (includes items 8 through 11)	1
8	102558201	Air Filter, 4 Inch	1
9	102558501	Gasket, Air Intake, Prec	1
10	102558601	Asm, Cover, Air Intake, Precedent	1
11	102558701	Evac Valve, Air Intake, Prec	1
12	105009201	Hose, Air Intake, Precedent with EFI	1

EXHAUST SYSTEM, GOLF – SUBARU EX40

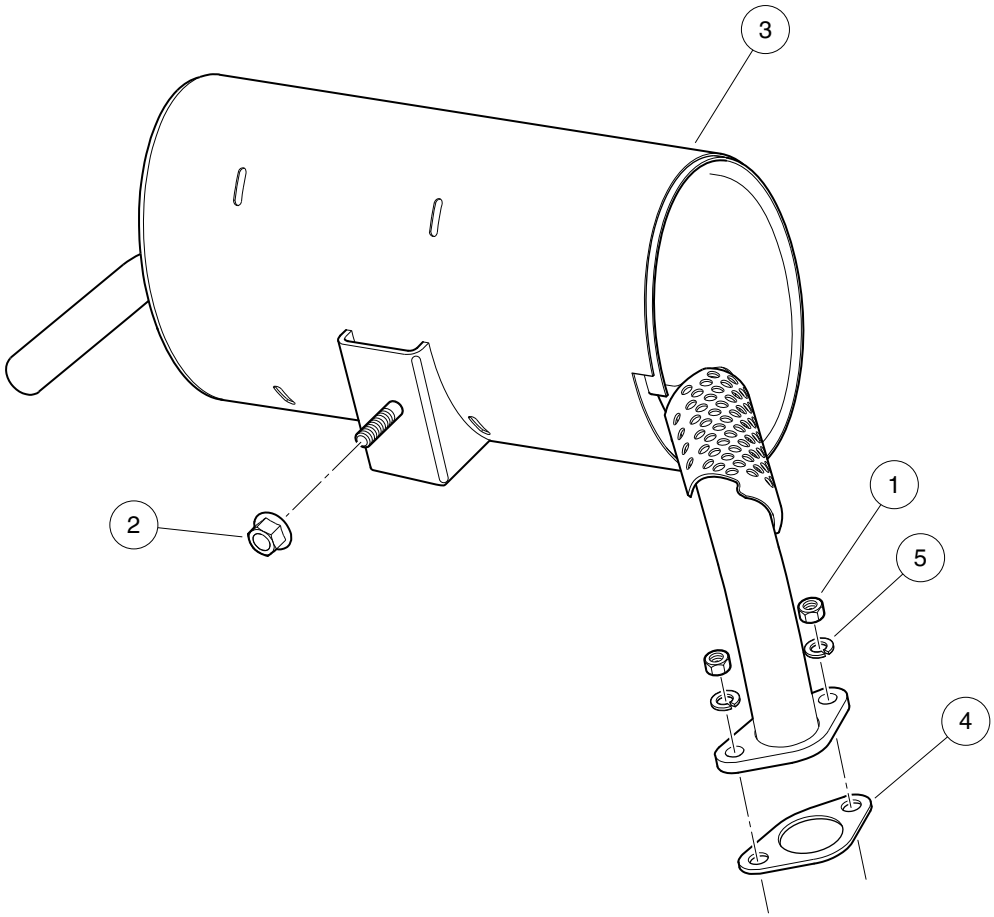

000948-004

EXHAUST SYSTEM, GOLF – SUBARU EX40

ITEM	PART NO.	DESCRIPTION	QTY
		1 2 3 4	
1	1012528	Nut, M8-1.25 Hex	2
2	102617201	Nut, Flanged, M10 X 1.5, Mechanically Deformed	1
3	105076201	Exhaust System, EX40	1
4	47539957001	Gasket, Exhaust, Ex40, Graphit	1
5	7174	Lockwasher, 5/16 Split	2

10

G

DRIVE BELT AND CLUTCHES – SUBARU EX40

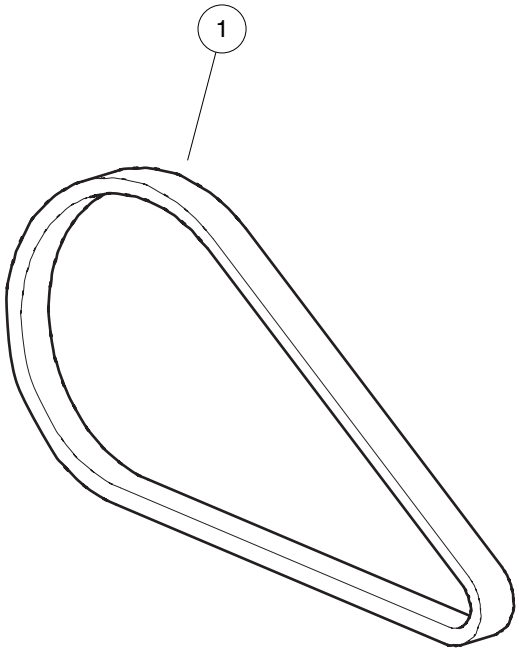

000918-001

DRIVE BELT – PEDAL-START VEHICLES WITH EFI

ITEM	PART NO.	DESCRIPTION	QTY
1	105245801	1 2 3 4 Belt, Drive, Pedal-Start	1

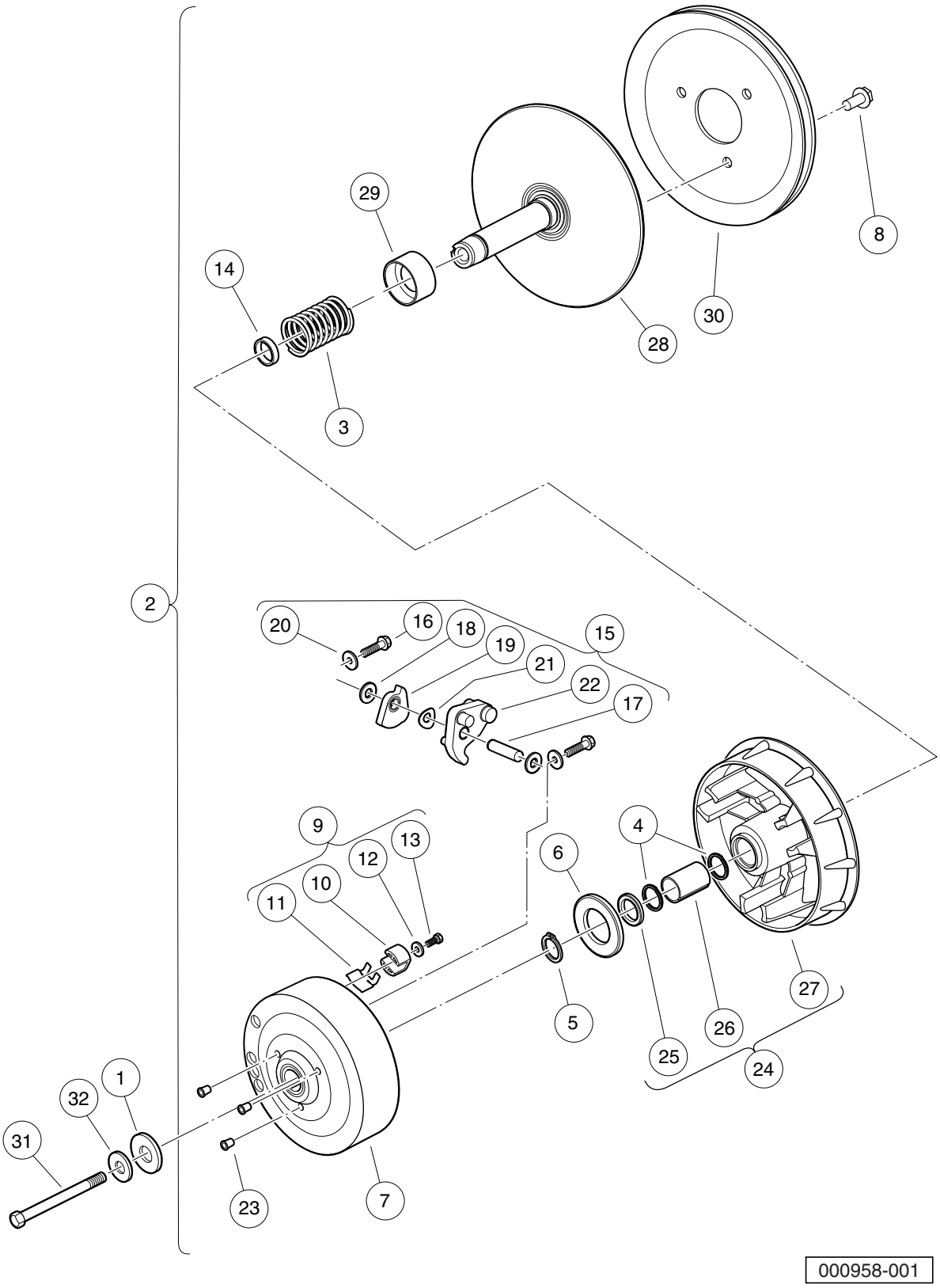
29
14
8
30
28
3
2
20
16
18
19
15
21
22
17
9
13
12
10
11
6
4
27
5
26
25
24
1
32
31
23
7
000958-001

DRIVE CLUTCH – PEDAL-START VEHICLES WITH EFI

ITEM	PART NO.	DESCRIPTION	QTY
		1 2 3 4	
1	102491501	Washer, Hard, M10	1
2	103973901	Clutch, Drive, Pedal-Start (includes items 3 through 30)	1
3	1014051	Spring, Drive Clutch	1
4	1014056	Ring, Spiral Backup	2
5	1014057	Ring, 0.810" Internal Retaining	1
6	1014058	Thrust Washer	1
7	1014059	Drive Hub Assy, Drive Clutch	1
8	1014288	Screw, 5/16-18 X 0.75, Thread-Forming	3
9	1014453	Kit, Drive Clutch Button (includes items 10 through 13)	1
10	1014062	Driver, Drive Clutch	3
11	1014287	Spring, Drive Button	3
12	183	Washer, #10, Type A, Flat	3
13	8450	Screw, #10-24 X 0.50, Hex-Head	3
14	1016289	Spacer, Fixed Face Shaft	1
15	1016801	Kit, Drive Clutch Weight (includes items 16 through 22)	1
16	1014063	Screw, 1/4-20 X 1.00, Hex Head	6
17	N/A	Pin, Dowel, 0.3752 x 1.50	3
18	1014065	Washer, Flat, 0.38" ID, Delrin	6
19	N/A	Clutch Weight, Secondary	3
20	N/A	Washer	6
21	1016201	Washer, Wave	3
22	N/A	Weight, Primary	3
23	N/A	Cap Plug	3
24	103974201	Asm, Sheave, Moveable, Drive, Wr (includes items 25 through 27)	1
25	1014055	Retainer	1
26	N/A	Bushing, Split, Drive Clutch	1
27	N/A	Sheave, Moveable, Drive, Wr	1
28	103974401	Sheave, Fixed, Drive, Wr	1
29	103984601	Spacer, Idler, Drive	1
30	105096101	Pulley, 7.3 Inch Effective Dia	1
31	103976101	Screw, 3/8-24x5.75, Patch	1
32	334	Washer, 3/8, Type A, Flat	1

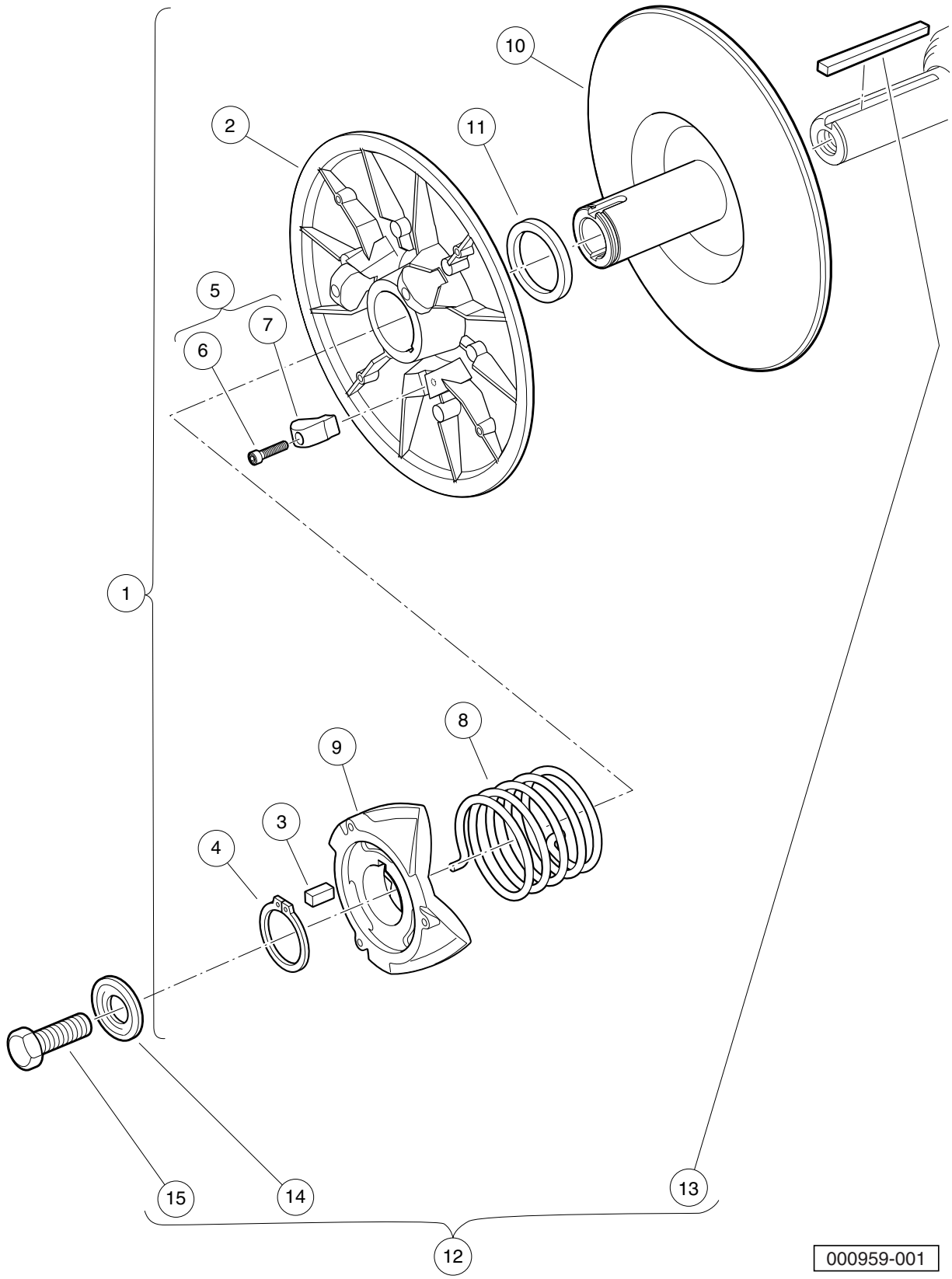
10
2
11
5
7
6
1
8
9
3
4
15
14
13
12
000959-001

DRIVEN CLUTCH – ALL GASOLINE VEHICLES WITH EFI

ITEM	PART NO.	DESCRIPTION	QTY
		1 2 3 4	
1	103974002	Clutch, Driven, Std-Speed, Key and Pedal Start (includes items 2 through 11)	1
2	1014072	Movable-Face Assembly with Bushing	1
3	1014078	Key, Driven Clutch	1
4	1014080	Ring, Retaining	1
5	1014454	Kit, Driven Clutch Button (includes items 6 and 7)	1
6	1012836	Screw, #8-32 X 3/4, Socket-Head Cap	3
7	N/A	Button, Drive	3
8	1017145	Spring, Driven Clutch, 55 Degree	1
9	1017686	Cam, Driven Clutch	1
10	103975301	Sheave, Fixed, Driven, Wr	1
11	104025101	Washer, Acetal, Driven Clutch	1
12	AM10419	Kit, Clutch Repair (includes items 13 through 15)	1
13	101833401	Key, 3/16 Sq X 1.50"	1
14	102155801	Washer, Driven Clutch	1
15	102242101	Screw, 5/16-18 X 3/4 Hex-Head with Patch	1

TRANSAXLE, FUJI ED65 (FOR SUBARU EX40)

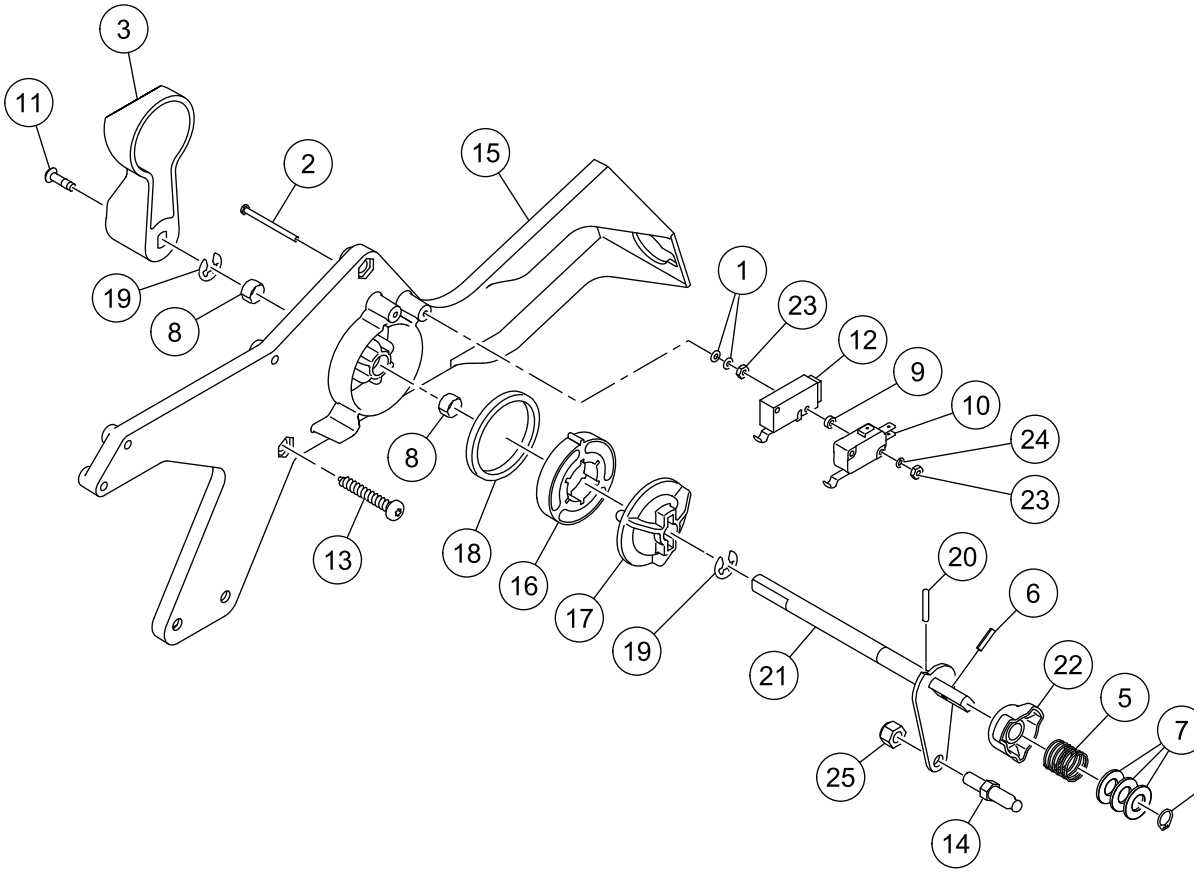

00106

FORWARD/REVERSE SHIFTER ASSEMBLY – EFI

ITEM	PART NO.	DESCRIPTION	QTY
		1 2 3 4	
1	1012431	Washer, #4 Flat	4
2	1012594	Screw, #4-40 Machine	2
3	1012987	Handle, FNR	1
4	1013589	Ring, Retaining, 0.338" Internal	1
5	1013590	Spring, FNR Cam	1
6	1013591	Pin, Roll, 1/8 X 1/2	1
7	1014065	Washer, Flat, 0.38" ID, Delrin	3
8	1014145	Bushing, Secondary Weight, Split	2
9	1014727	Washer, Flat, #4, Nylon	2
10	1014807	Switch, Limit	1
11	1015064	Screw, #8-32 X 0.63 Machine	1
12	101979101	Switch, Limit, Assembly, Sealed	1
13	102296040	Screw, Torx Pan Hd Pt, M6 X 40	3
14	102526201	Stud, Thread, 1/4-28	1
15	105037501	Housing, Gas FNR Body Shift	1
16	105037601	Cam, FNR Detent, 45 Degree	1
17	105037701	Follower, FNR Detent	1
18	105038501	Spring, Wave, Gas FNR Shifter	1
19	105039801	E-Clip, External, 8mm Groove	2
20	105040401	Pin, Round, 0.125 Dia x 0.625	1
21	105041101	Weldment, Shaft, Fnr, Prec	1
22	105074101	Cam, Neutral Lockout, EX40	1
23	8057	Nut, #4-40 Hex Machine	4
24	8058	Lockwasher, #4 Split	2
25	8717	Locknut, Nylon Insert, 1/4-28	1

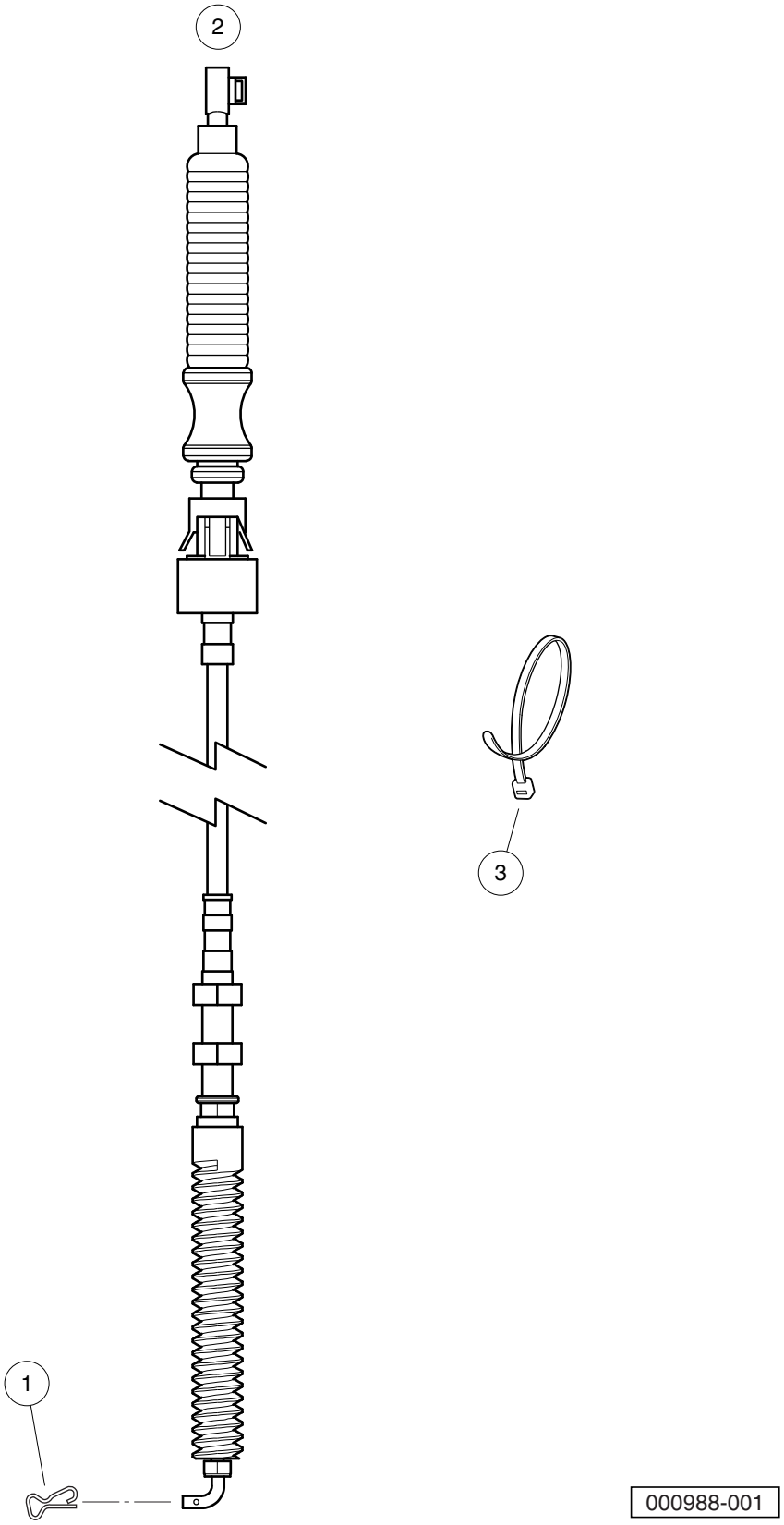
2
3
1
000988-001

SHIFTER CABLE – CA100, XRT800, PRECEDENT

ITEM	PART NO.	DESCRIPTION	QTY
		1 2 3 4	
1	103886601	Clip, Bowtie	1
2	105038801	Cable, Shifter, Precedent/CA100/XRT800	1
3	8990	Tie Wrap, 8" Nylon	A/R

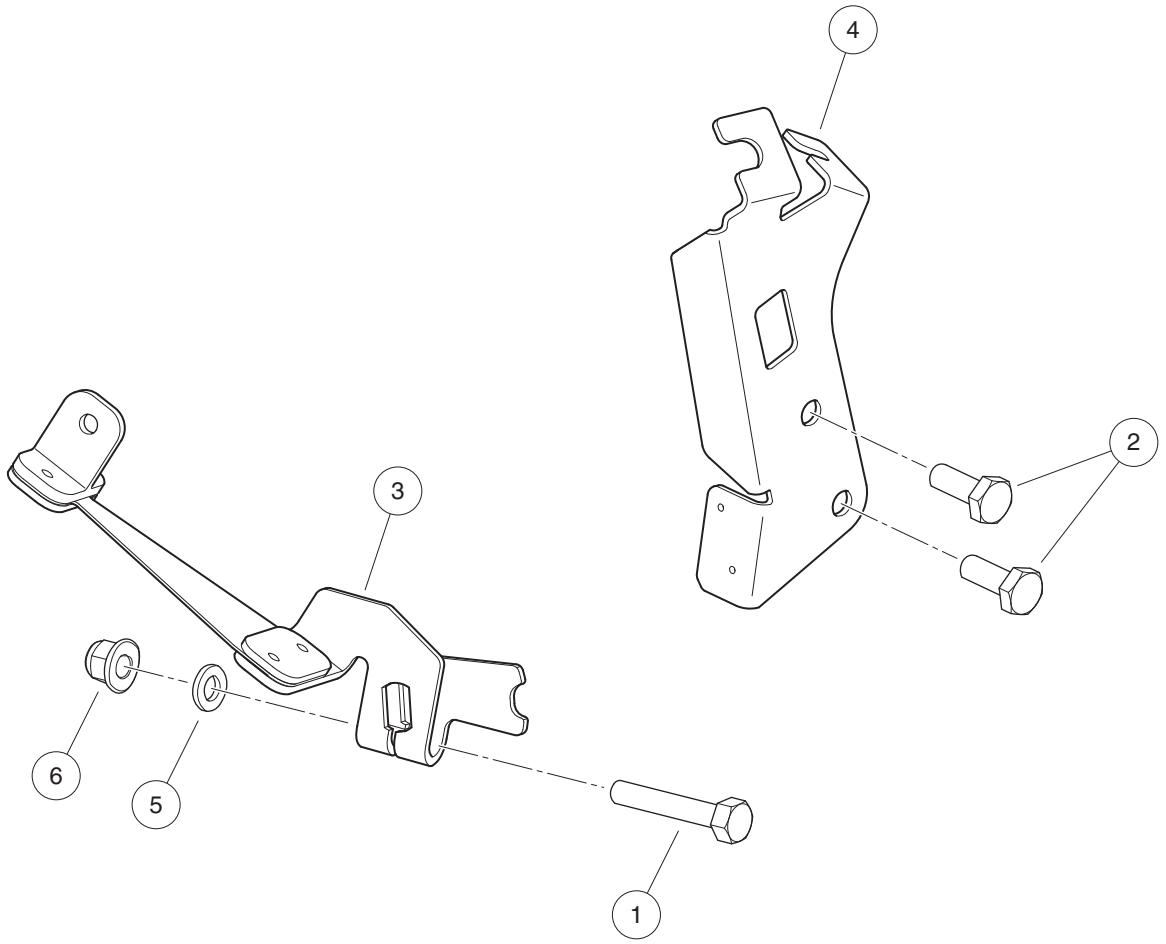

000965-003

SHIFT LEVER AND BRACKET – PEDAL-START ENGINES

ITEM	PART NO.	DESCRIPTION	QTY
		1 2 3 4	
1	101862001	Screw, 1/4-20 X 1.500 Flange	1
2	102498201	Bolt, M10 X 1.25 X 25, Loctite	2
3	105040901	Lever, Shift, Flex, Transaxle, Pedal-Start	1
4	105135101	Bracket, Cable, FNR/Accelerator, ED65	1
5	332	Washer, 1/4 Type A Narrow Flat	1
6	8233	Locknut, 1/4-20, Nylon Insert	1

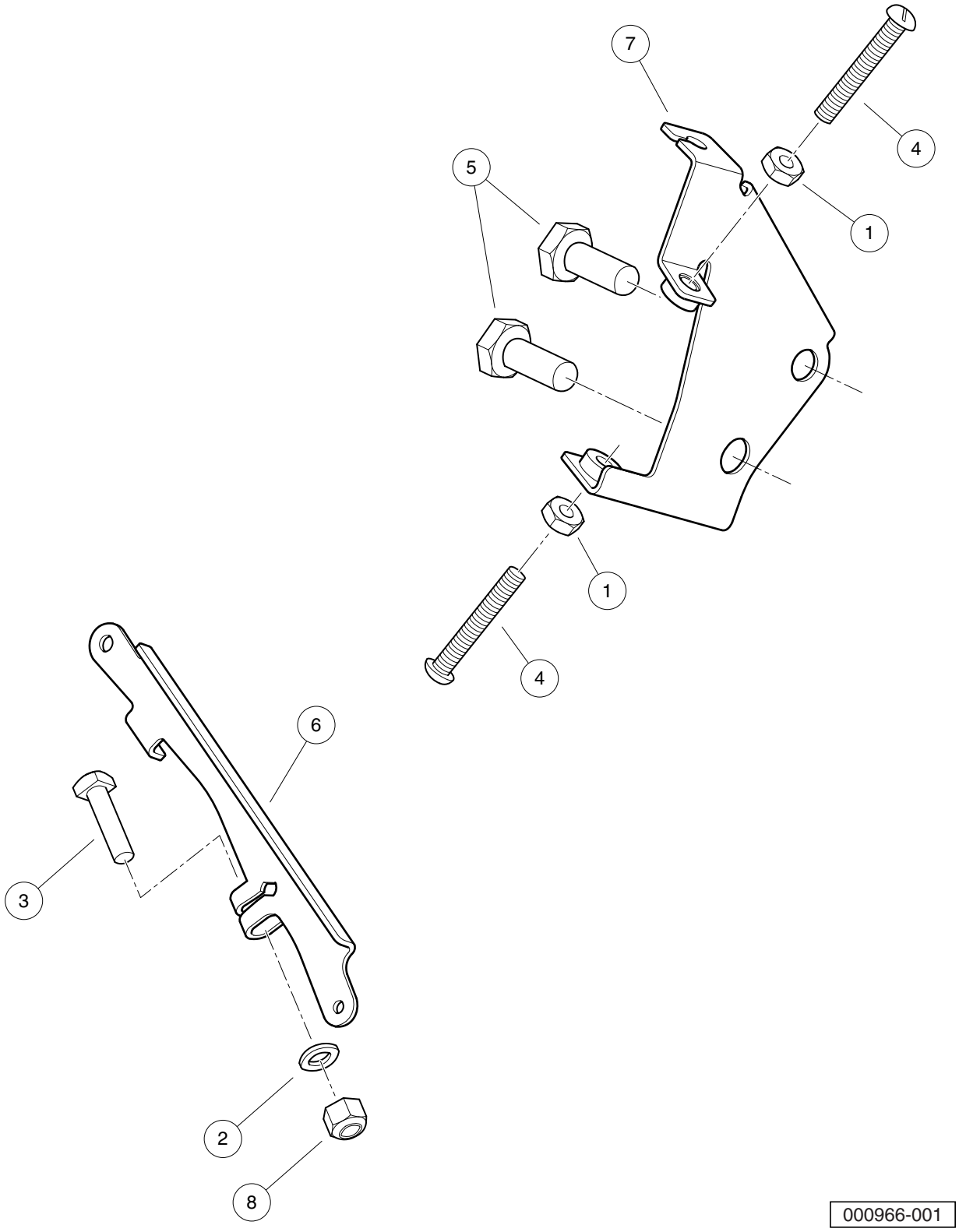
7
4
5
1
1
4
6
3
2
8
000966-001

GOVERNOR ARM AND BRACKETS – PRECEDENT

ITEM	PART NO.	DESCRIPTION	QTY
		1 2 3 4	
1	1011114	Nut, M6-1.00 Hex	2
2	1014007	Washer, 1/4, Flat	1
3	101886101	Screw, 1/4-20 X 1.00, Square-Head	1
4	102476401	Bolt, Stop, Pedal	2
5	102498201	Bolt, M10 X 1.25 X 25, Loctite	2
6	104023501	Arm, Governor, ED65	1
7	105144401	Weldment, Governor Bracket	1
8	8233	Locknut, 1/4-20, Nylon Insert	1

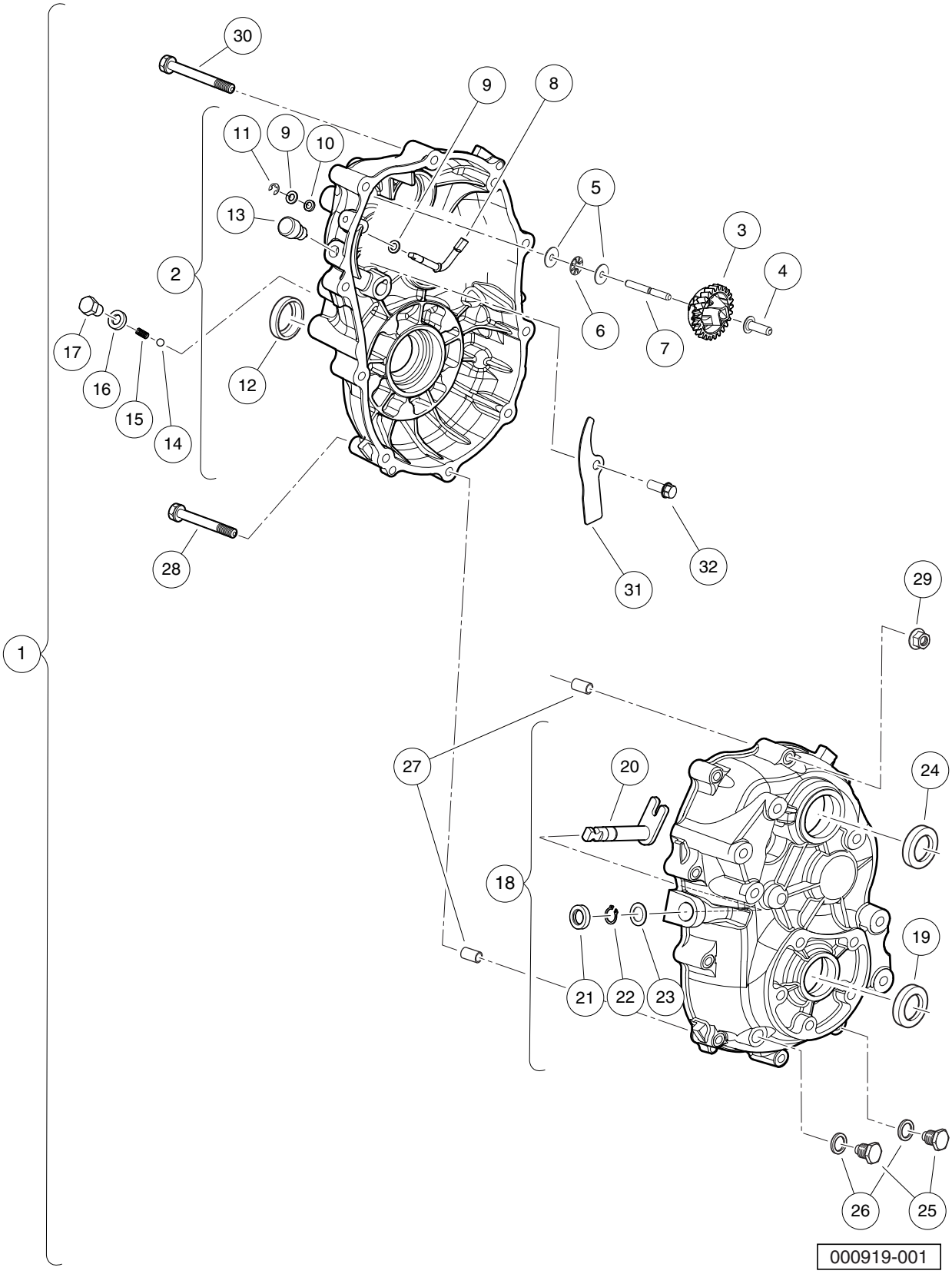
30
9
8
11
9
10
5
13
3
2
4
6
7
17
16
12
15
14
28
31
32
29
1
27
20
24
18
19
21
22
23
26
25
000919-001

TRANSAXLE (ED65), OPEN – PAGE 1 OF 3

ITEM	PART NO.	DESCRIPTION	QTY
		1 2 3 4	
1	103879701	Transaxle, ED65, Open Differential (includes items 2 through 32)	1
2	105025001	Case, Transaxle, Left, Complete, ED65 (includes items 3 through 13)	1
3	105025101	Gear, Governor, Complete, ED65	1
4	105025201	Sleeve, Governor, ED65	1
5	105025301	Washer, ED65	2
6	105025401	Bearing, Thrust, ED65	1
7	105025501	Shaft, Governor Gear, ED65	1
8	105025601	Shaft, Governor, ED65	1
9	105025701	Washer, 6mm, ED65	2
10	105025801	Seal, Oil, 6x10x2.5, ED65	1
11	105025901	Retaining Ring, E5, ED65	1
12	105026001	Seal, Oil, 24x40x9, ED65	1
13	105027101	Vent, Breather, ED65	1
14	105026101	Ball, Steel, ED65	1
15	105026201	Spring, ED65	1
16	105026301	Gasket, 10, ED65	1
17	105026401	Bolt, M10-1.25x12mm Lg, ED65	1
18	105026501	Case, Transaxle, Right, Complete, ED65 (includes items 19 through 24)	1
19	105026001	Seal, Oil, 24x40x9, ED65	1
20	105026601	Shaft, Select, ED65	1
21	105026701	Seal, Oil, 13x22x5, ED65	1
22	105026801	Snap Ring, 13mm, ED65	1
23	105026901	Spacer, 13x1, ED65	1
24	105027001	Seal, Oil, 25x45x7, ED65	1
25	105027201	Plug, Oil Drain, ED65	2
26	105027301	Gasket, 14, ED65	2
27	105028301	Pin, Guide, ED65	2
28	105028501	Bolt, Flange, M8-1.25x65mm, ED65	1
29	105030001	Nut, Flange, M8-1.25, ED65	10
30	105030701	Bolt, Flanged, M8-1.25x80mm, ED65	9
31	105234801	Plate, Ed65 Splash	1
32	105234901	Bolt, M6-1 X 12mm Lg, Ed65	1

Note: Fuji transaxle component listings span three pages. To identify your transaxle, locate the serial number decal on the axle tube.

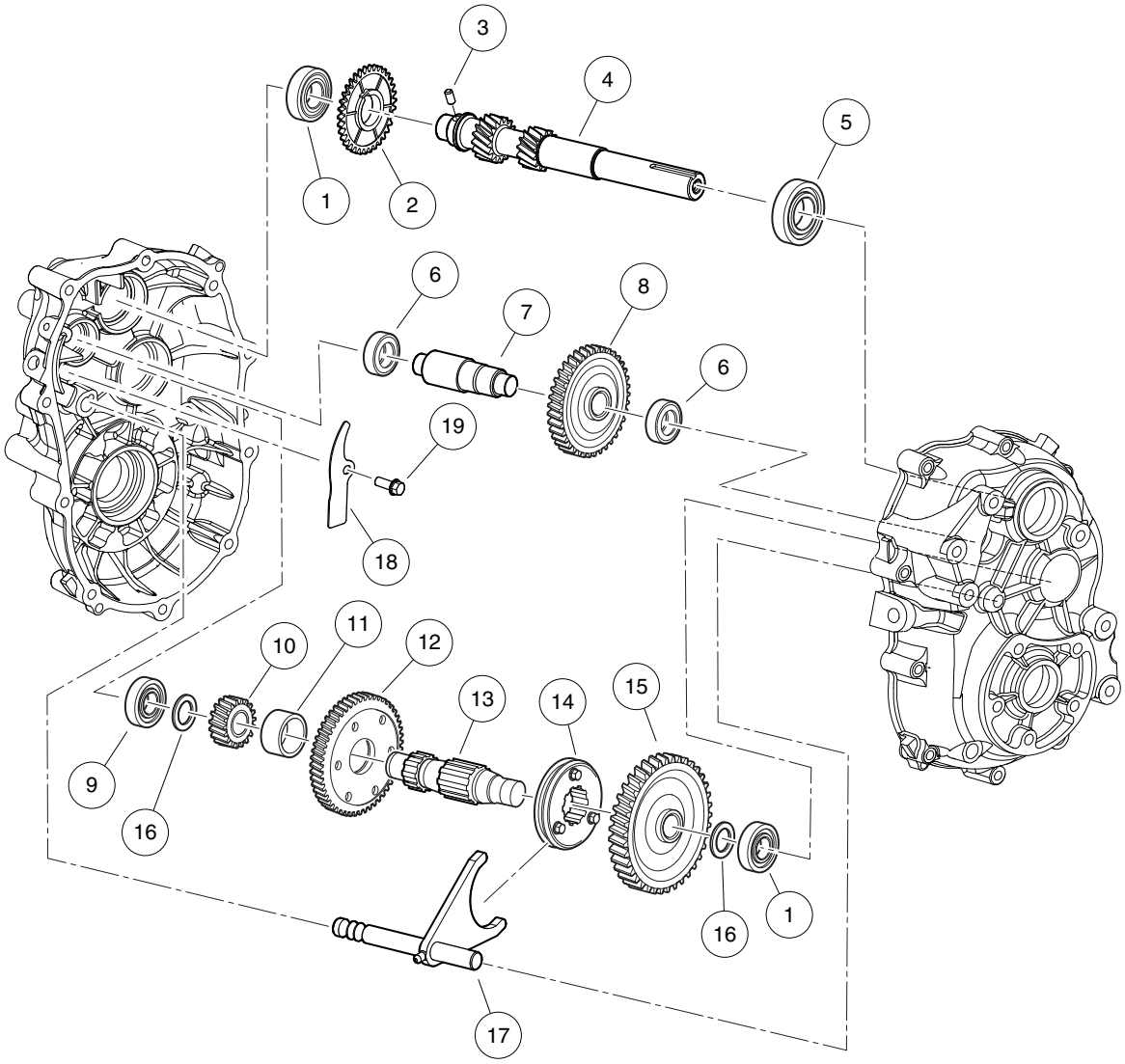

000919-007

TRANSAXLE (ED65), LIMITED SLIP AND OPEN – PAGE 2 OF 3

ITEM	PART NO.	DESCRIPTION	QTY
		1 2 3 4	
1	105027401	Bearing, Ball (6204)	2
2	105027501	Gear, Governor, 34 Tooth, ED65	1
3	105027601	Pin, 6x12 Long, ED65	1
4	105027701	Shaft, Input, ED65	1
5	105027801	Bearing, Ball (6205 seal)	1
6	105027901	Bearing, Ball (6202)	2
7	105028001	Shaft, Counter, ED65	1
8	105028201	Gear, 34 Tooth, ED65	1
9	105028401	Bearing, Ball (6304)	1
10	105028601	Gear, 17 Tooth, ED65	1
11	105028701	Collar, 24 x 12, ED65	1
12	105028801	Gear, 52 Tooth, ED65	1
13	105028901	Shaft, Center, ED65	1
14	105029001	Clutch, Pin, ED65	1
15	105029101	Gear, 62 Tooth, ED65	1
16	105029201	Spacer, 20x2, ED65	2
17	105030901	Shaft, Shift, ED65	1
18	105234801	Plate, Ed65 Splash	1
19	105234901	Bolt, M6-1 X 12mm Lg, Ed65	1

Note: To identify your transaxle, locate the serial number decal on the axle tube.

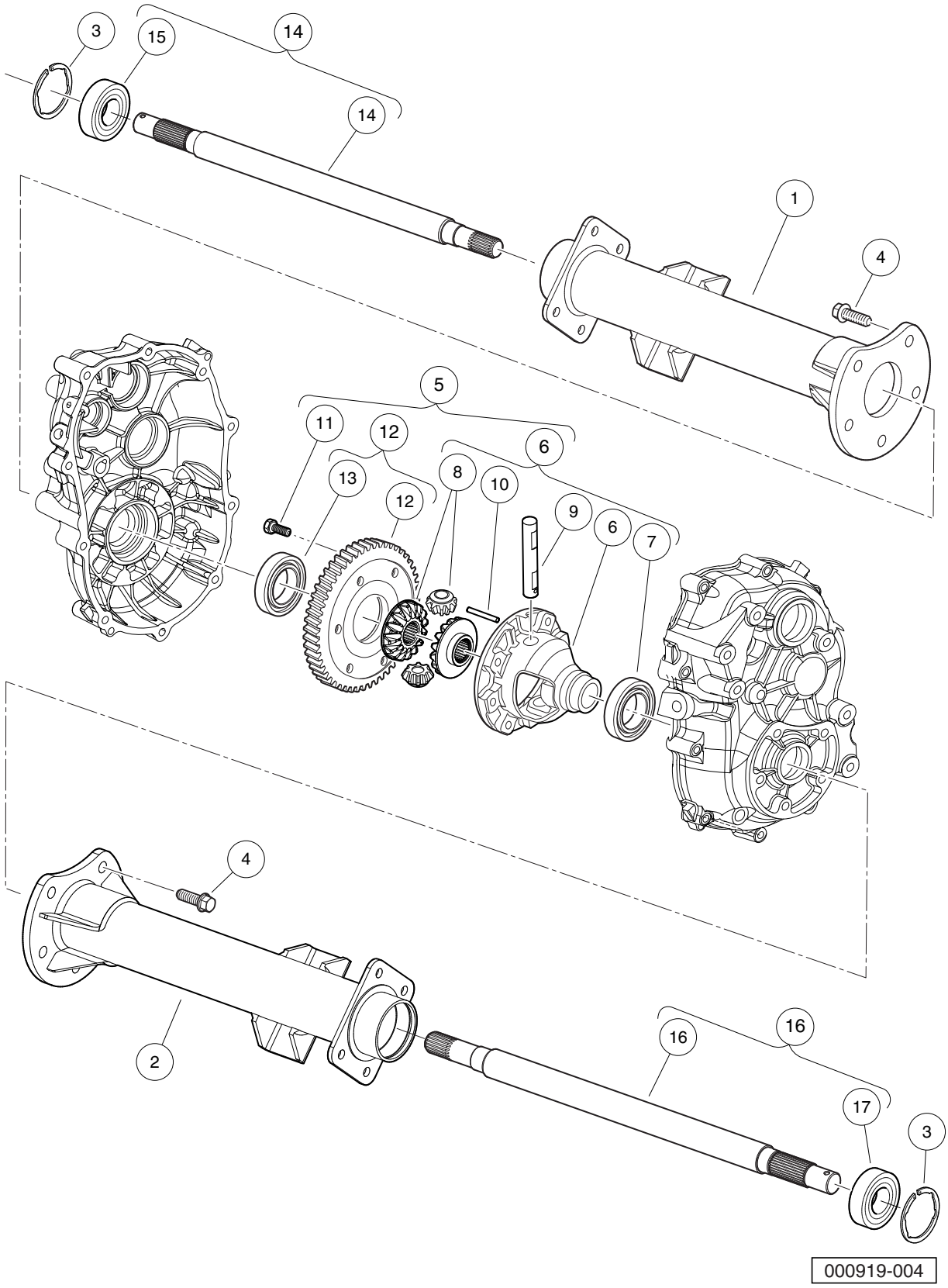
3
15
14
14
1
4
5
11
12
6
13
8
10
12
9
6
7
4
2
16
16
17
3
000919-004

TRANSAXLE (ED65), OPEN – PAGE 3 OF 3

ITEM	PART NO.	DESCRIPTION	QTY
		1 2 3 4	
1	105030401	Axle Tube, Driver-Side, ED65	1
2	105030501	Axle Tube, Passenger-Side, ED65	1
3	105030601	Snap Ring, 52mm, ED65	2
4	105030801	Bolt, Flange, M10-1.25x25, ED65	10
5	105031001	Differential, Open, ED65 (includes items 6 through 12)	1
6	105029301	Case, Differential, Complete, ED65 (includes items 7 through 10)	1
7	105028101	Bearing, Ball (6006)	1
8	105029401	Gear Set, Differential, ED65	1
9	105029601	Shaft, Differential, ED65	1
10	105029701	Pin, 4x40 Long, ED65	1
11	105029501	Bolt, M10-1.25x26mm Lg, ED65	6
12	105029901	Gear, 60 Tooth, Complete, ED65 (includes item 13)	1
13	105029801	Bearing, Ball (6007)	1
14	105066001	Axle Shaft, Driver-Side, Complete, ED65 (includes item 15)	1
15	105030301	Bearing, Ball (6205DD)	1
16	105066101	Axle Shaft, Passenger-Side, Complete, ED65 (includes item 17)	1
17	105030301	Bearing, Ball (6205DD)	1

Note: To identify your transaxle, locate the serial number decal on the axle tube.

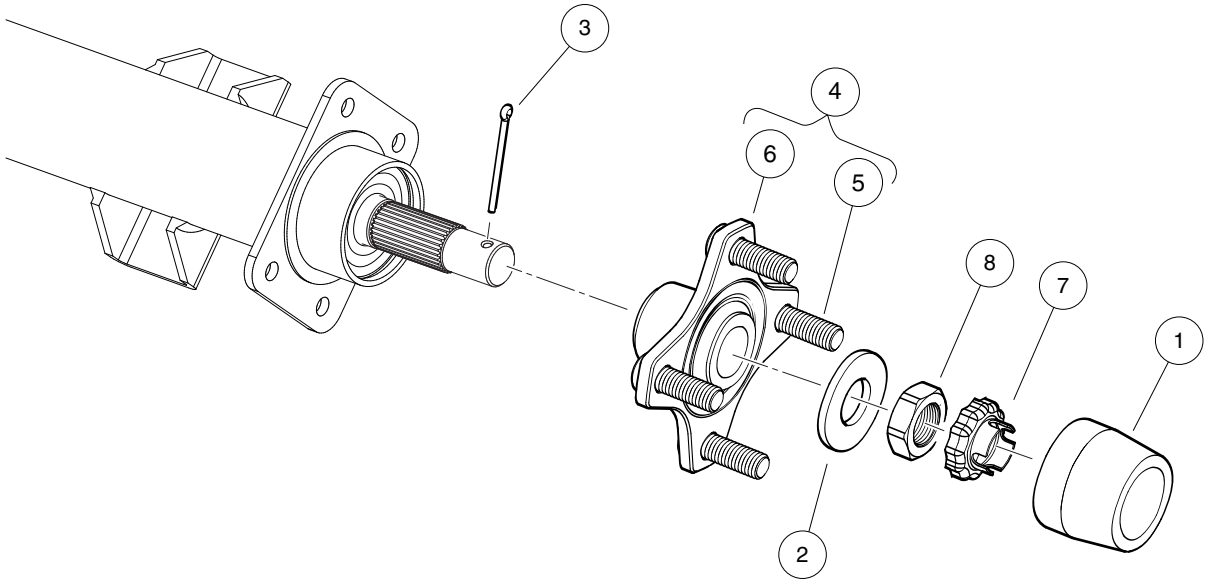

000919-006

HUB, REAR

ITEM	PART NO.	DESCRIPTION	QTY
		1 2 3 4	
1	102274101	Center Cap, Rubber	2
2	102617801	Washer, Hard, M22	2
3	103989501	Pin, Cotter, 9/64 X 1.75"	2
4	103995001	Asm, Hub, Machined, Golf/Utility (includes items 5 and 6)	2
5	103951501	Lug Stud, 1/2-20 UNF, SAE J1102	4
6	103979301	Hub, Machined, Golf/Utility	1
7	104021701	Retaining Ring, Hex Nut, M22	2
8	104027101	Nut, Hex, M22x1.5, Thin	2

12

G

ELECTRICAL SYSTEM – EXCEL WITH HIGH FREQUENCY CHARGERS

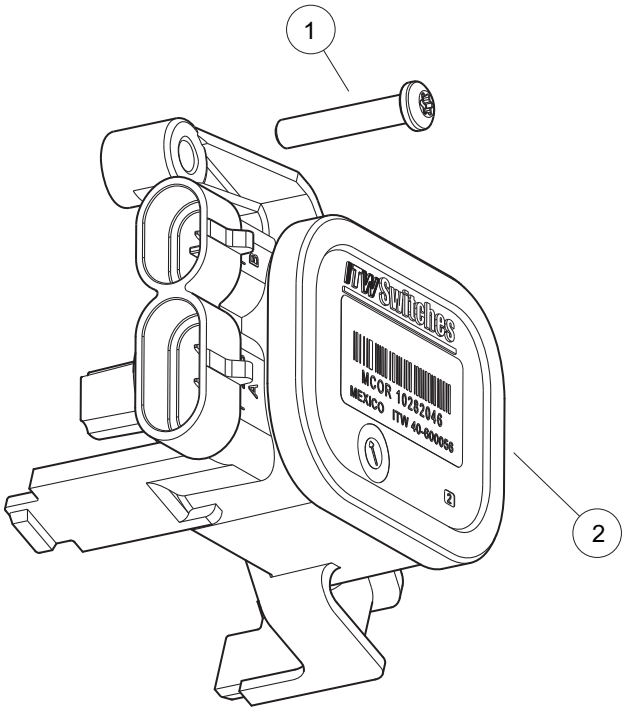

000243-005

MOTOR CONTROLLER OUTPUT REGULATOR (MCOR)

ITEM	PART NO.	DESCRIPTION	QTY
		1 2 3 4	
1	103943401	Screw, Pan, #10 X 1.00 Hi-lo	1
2	105116301	MCOR4, Type 16 Switch	1

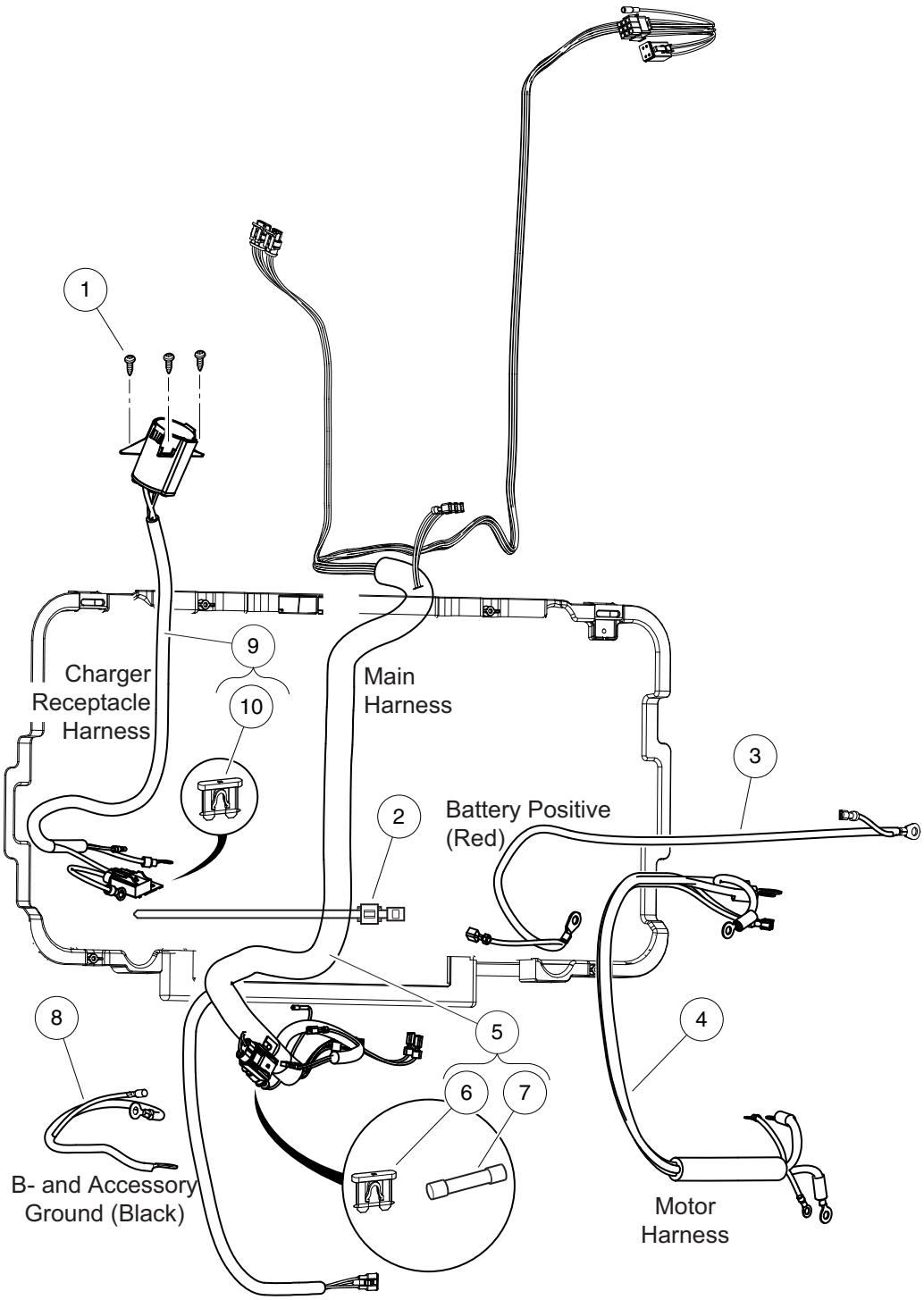
1
9
10
Charger
Receptacle
Harness
Main
Harness
3
2
Battery Positive
(Red)
8
5
4
6
7
B- and Accessory
Ground (Black)
Motor
Harness

000647-002

ITEM	PART NO.	DESCRIPTION	QTY
		1 2 3 4	
1	101832001	Screw, #7-19 X 0.625 Phillips Pan-Head Tap	3
2	102554901	Clip, Edge, with Wire Tie	1
3	103375402	Asm, Wire, Battery Positive, B+, Short	1
4	103375702	Asm, Harness, Motor 1/4	1
5	104023201	Harness, Main, Prec, Excel w/Hi-Freq, Mcor3 (includes items 6 and 7)	1
6	102538601	15 Amp Fuse	1
7	103924801	Fuse, Glass, 2-Amp	1
8	104024001	Asm, Wire, Battery Negative, B-, w/ Accy Ground	1
9	105137401	Harness, Wire, Charger Receptacle (for Yellow DC Cord) (includes item 10)	1
10	102492301	Fuse, 30-Amp	1
11	8639	Tie Wrap, 11" Nylon	A/R
12	8990	Tie Wrap, 8" Nylon	A/R
		Note: Items 11 and 12 not shown.	

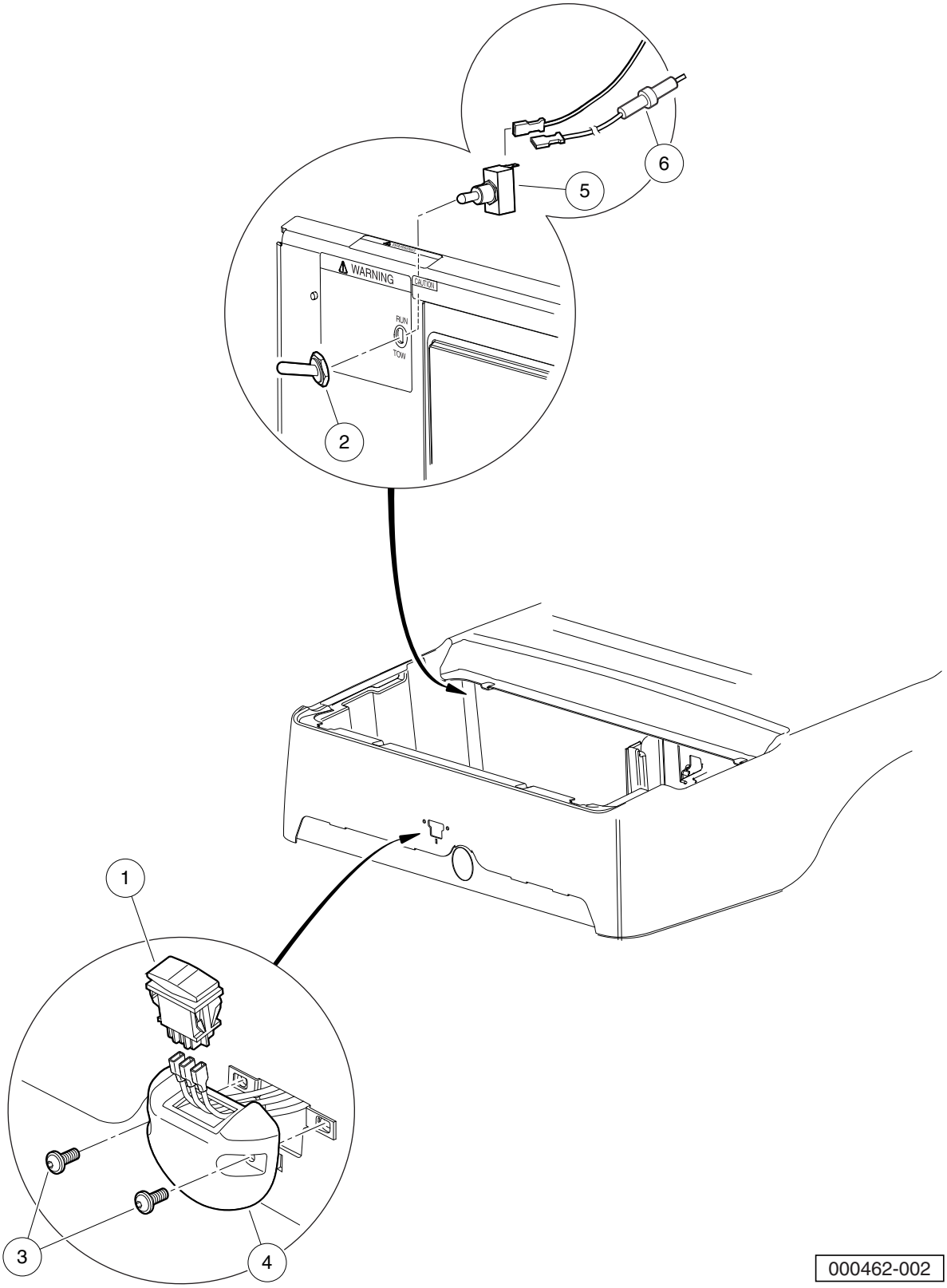
6
5
WARNING
CAUTION
RUN
TOW
2
1
3
4
000462-002

FORWARD/REVERSE SWITCH AND TOW/RUN SWITCH

ITEM	PART NO.	DESCRIPTION	QTY
		1 2 3 4	
1	101856001	Switch, Rocker, Double-Pole	1
2	101908401	Boot, Switch	1
3	102296920	Screw, M6, Torx Button Head, Sems	2
4	102508401	Housing, FNR Electric	1
5	102511101	Switch, Tow	1
6	102538601	15 Amp Fuse	1

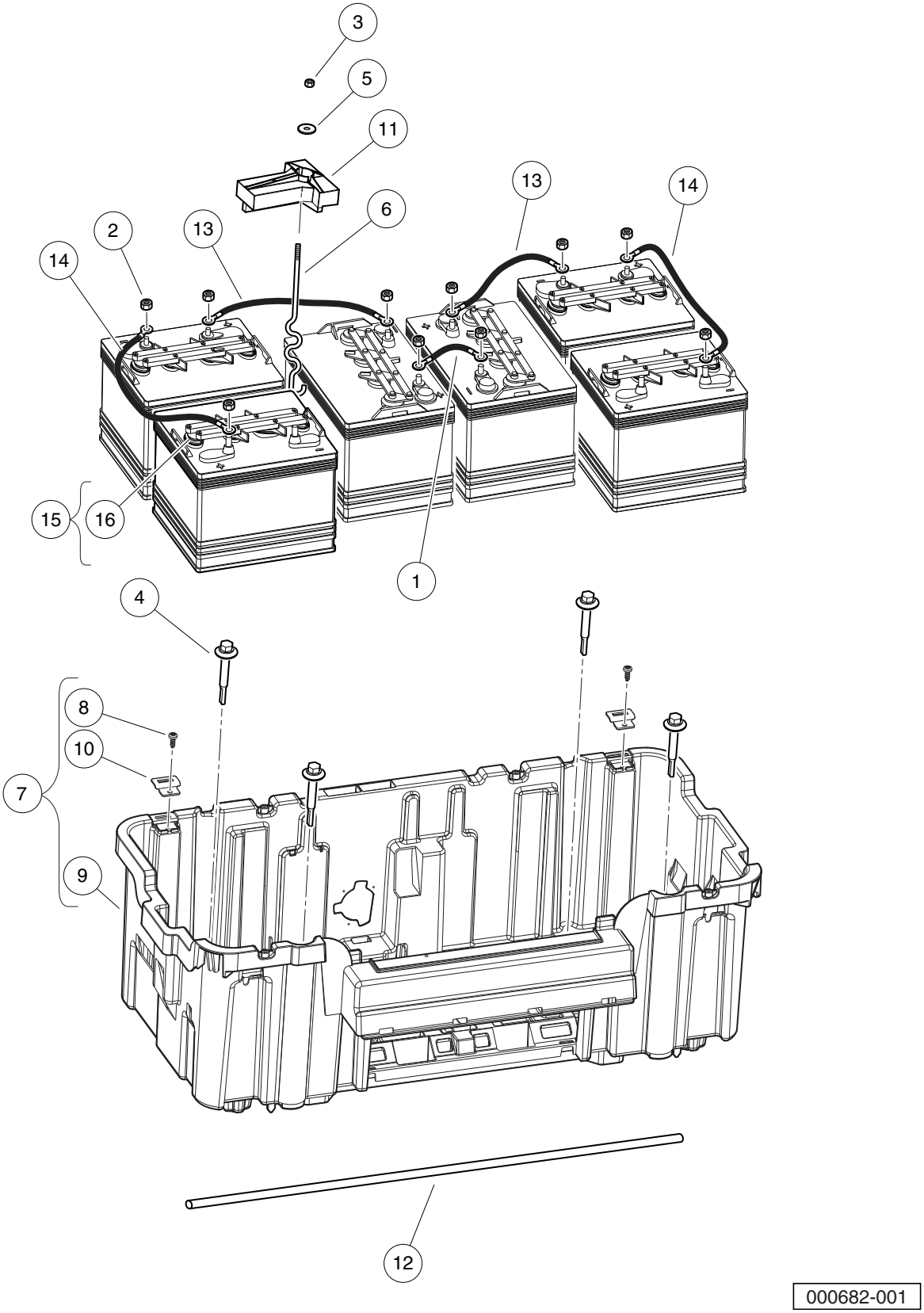
3
5
11
13
14
6
2
13
14
15
16
1
4
8
10
7
9
12
000682-001

BATTERIES AND BATTERY BUCKET, PD+ 8-VOLT

ITEM	PART NO.	DESCRIPTION	QTY
		1 2 3 4	
1	1010958	Asm, Wire, #6blk 8in	1
2	1014304	Nut, 5/16-18 Stainless-Steel Hex	12
3	1014555	Locknut, 7/16-14 Nylon Hex	2
4	102292356	Screw-1/4-20x56 Hwh Self Drill	4
5	102491501	Washer, Hard, M10	2
6	103357701	Bolt, Battery, "s" Hold-down	2
7	103368401	Asm, Bucket, Batt, Elec, Prec (includes items 8 through 10)	1
8	102298020	Screw, K80x20, Torx Pn Hd Pt	2
9	N/A	Bucket, Batt, Elec, Precedent	1
10	103368301	Hinge - Nested	2
11	103374801	Hold Down, Battery	2
12	103375301	Tube, Cross, Battery Rod	1
13	103647402	Wire Asm #6 Blk, 12"	2
14	103647403	Wire Asm #6 Blk, 17"	2
15	105138301	Battery, 8-Volt, JCI GC8 Type E (includes item 16)	6
16	103765601	Cap, Spin, 8-Volt Battery	1

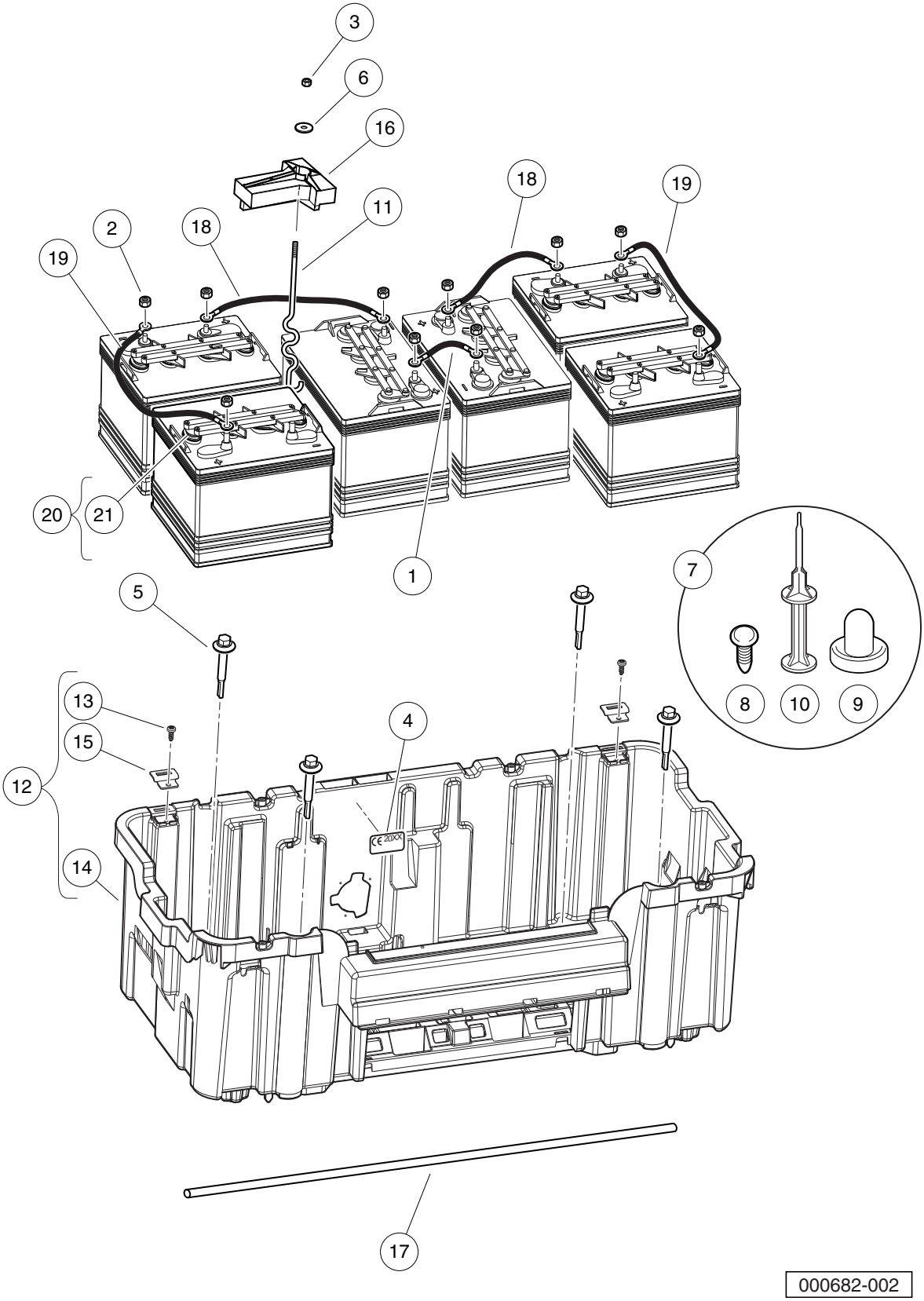
3
6
16
18
19
11
2
18
19
20
21
1
7
5
8
10
9
13
15
12
4
14
17
000682-002

BATTERIES AND BATTERY BUCKET, PD+ 8-VOLT, CE

ITEM	PART NO.	DESCRIPTION	QTY
		1 2 3 4	
1	1010958	Asm, Wire, #6blk 8in	1
2	1014304	Nut, 5/16-18 Stainless-Steel Hex	12
3	1014555	Locknut, 7/16-14 Nylon Hex	2
4	101865805	Ce - Decal	1
5	102292356	Screw-1/4-20x56 Hwh Self Drill	4
6	102491501	Washer, Hard, M10	2
7	102571202	Kit Ce Plug - Bucket Elec (includes items 8 through 10)	1
8	1010434	Barrel - Plastic	2
9	N/A	Plug, 1/2", CE Bucket	6
10	N/A	Install Tool, CE Bucket Plug	1
11	103357701	Bolt, Battery, "s" Hold-down	2
12	103368401	Asm, Bucket, Batt, Elec, Prec (includes items 13 through 15)	1
13	102298020	Screw, K80x20, Torx Pn Hd Pt	2
14	N/A	Bucket, Batt, Elec, Precedent	1
15	103368301	Hinge - Nested	2
16	103374801	Hold Down, Battery	2
17	103375301	Tube, Cross, Battery Rod	1
18	103647402	Wire Asm #6 Blk, 12"	2
19	103647403	Wire Asm #6 Blk, 17"	2
20	105138301	Battery, 8-Volt, JCI GC8 Type E (includes item 21)	6
21	103765601	Cap, Spin, 8-Volt Battery	1

Note: The CE-specific parts shown are required for vehicles sold in the European Union.

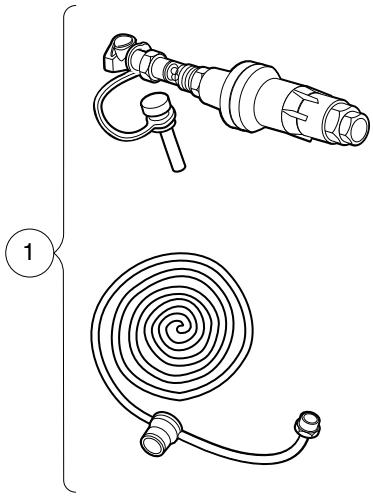

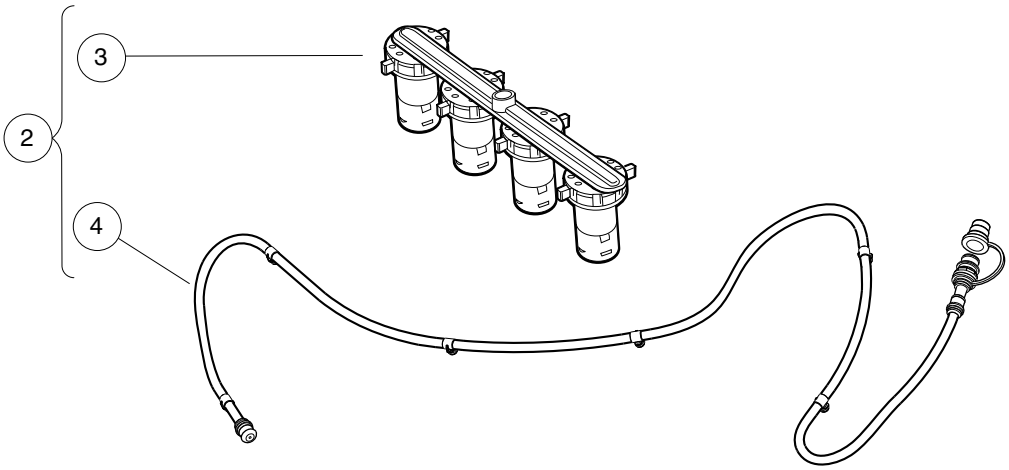

000731-009

SINGLE POINT WATERING SYSTEM, 8V

ITEM	PART NO.	DESCRIPTION	QTY
		1 2 3 4	
1	102958001	Kit Regulated Hose Sply Spws	1
2	103395505	Kit, Spws, Prec, 8 Volt Non-Trojan (includes items 3 and 4)	1
3	103510602	Spws, Manifold Asm, 8v Non-Trojan	6
4	103774701	Spws, Hose 8v Non-trojan	1
		Note: For JCI 8-Volt batteries only.	

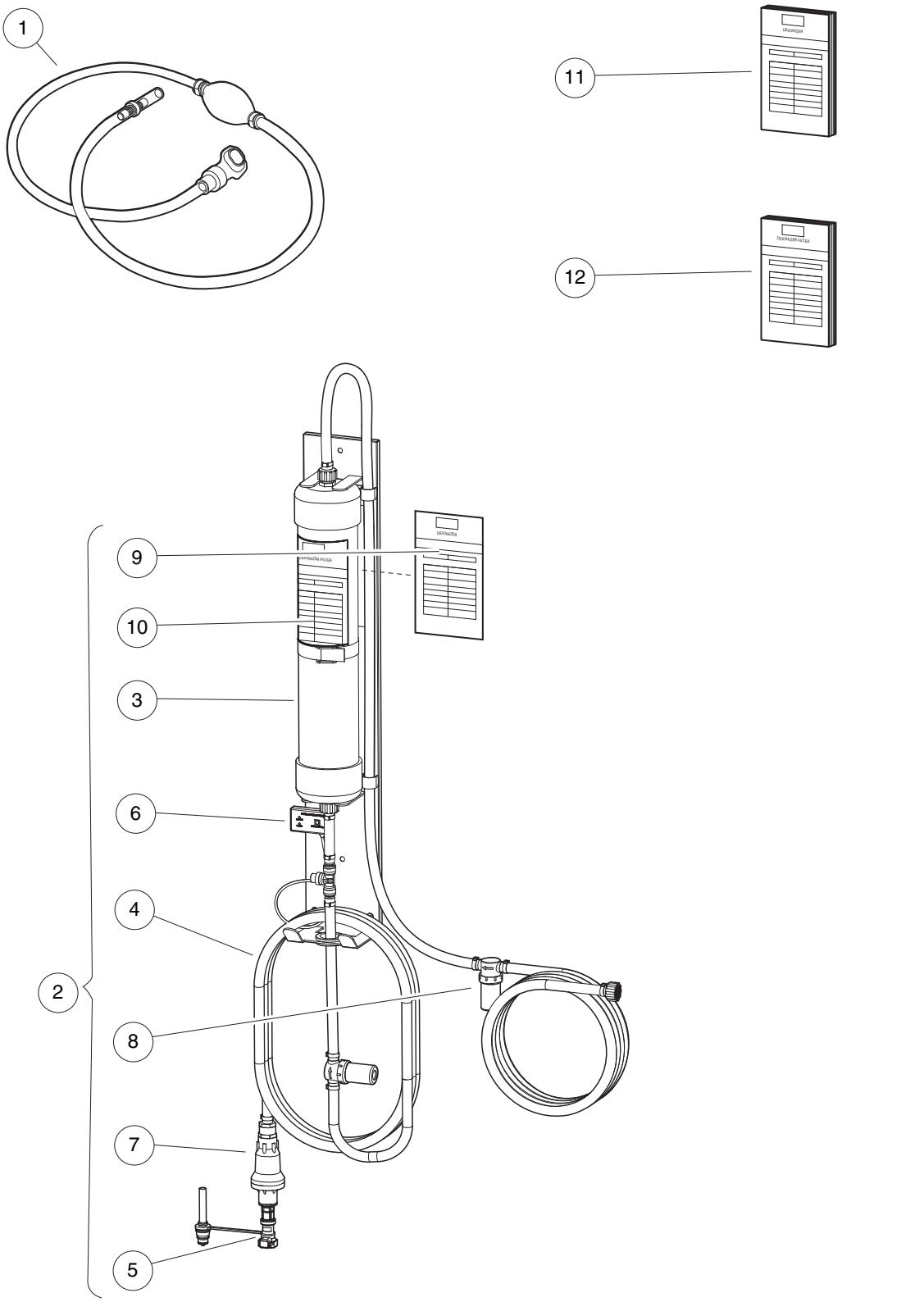
1
11
12
9
10
3
6
4
2
8
7
5
002523-003

HAND PUMP AND DEIONIZER (BATTERY-POWERED QUALITY LIGHT)

ITEM	PART NO.	DESCRIPTION	QTY
		1 2 3 4	
1	104006101	Kit, Hand Pump, Spws	1
2	105166801	Deionizer, w/Battery-Powered Water Quality Light (includes items 3 through 10)	1
3	104005901	Cartridge, Deionizer	1
4	105166901	Hose,outlet,deionizer	1
5	105167001	Flow Ind, W/coupler, Deionizer	1
6	105167101	Light, Quality, Battery-Powered, w/T-Fitting	1
7	105168501	Regulator, Pressure, Deionizer	1
8	105168601	Strainer, In-line, Deionizer	1
9	AM1300001	Decal, Filter Log, Blue	1
10	AM1300201	Decal, Inspect Log, Yellow	1
11	AM1300101	Decal, Filter Log, Blue, Pack of 100	A/R
12	AM1300301	Decal, Inspect Log, Yellow, Pack of 100	A/R

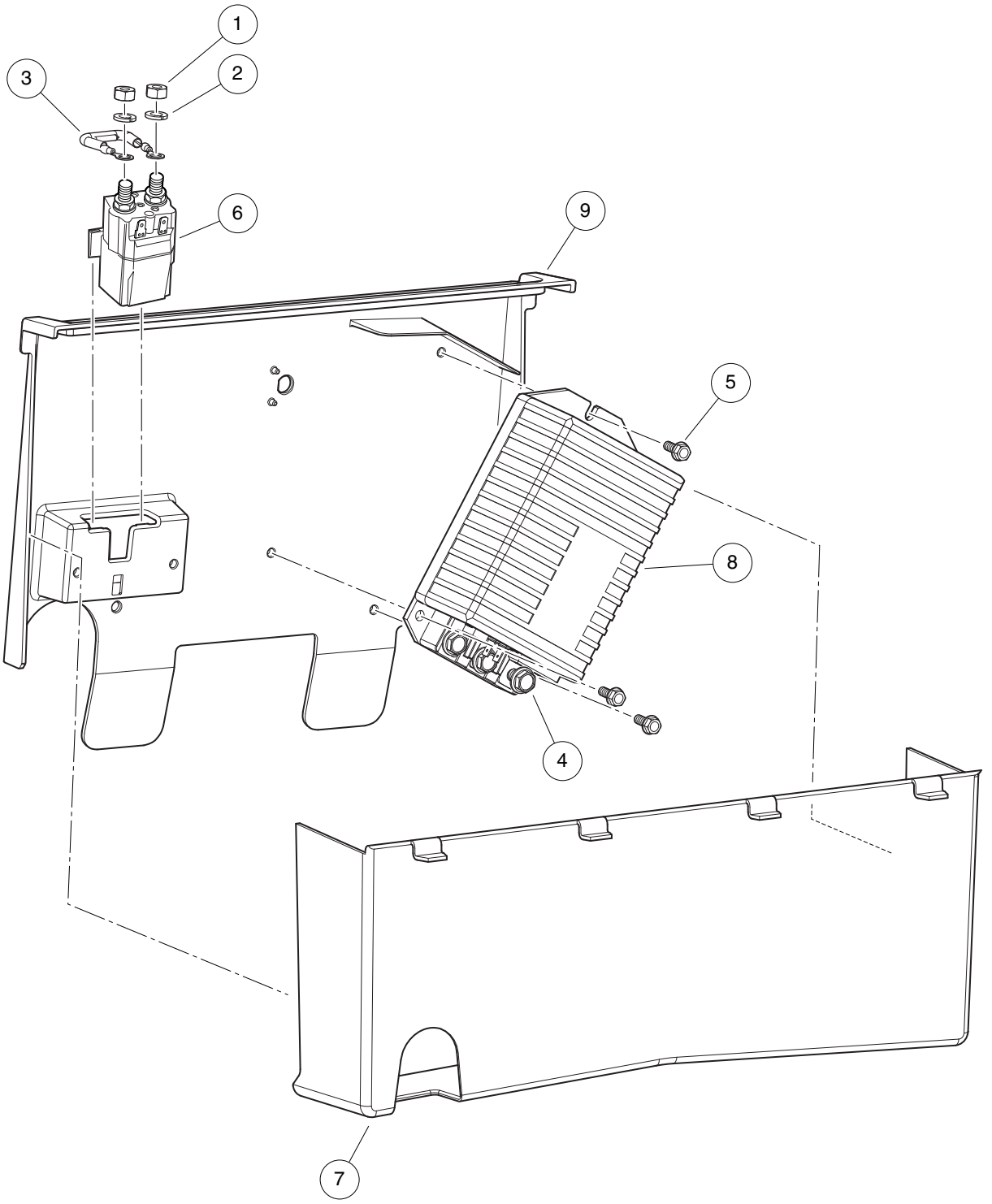

000486-013

CONTROLLER AND SOLENOID

ITEM	PART NO.	DESCRIPTION	QTY
		1 2 3 4	
1	1012528	Nut, M8-1.25 Hex	2
2	1013734	Lockwasher, 8mm Split	2
3	1014947	Resistor Assembly	1
4	102240501	Bolt, Controller, Terminal	3
5	102296716	Screw, M6 X 16 Tt Hx Fl Hd	3
6	102865901	Solenoid 48v Slot Mt No Diode	1
7	103367901	Shield - Controller	1
8	103982301	Controller, 1515, 250A, White	1
9	105005001	Component Mounting Plate	1

Note: Replacement solenoid may vary in appearance from the original.

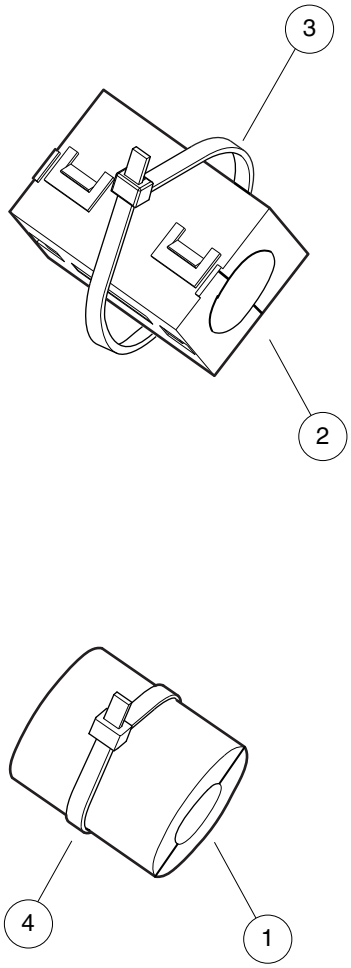

001055-001

FERRITE BEADS, CE

ITEM	PART NO.	DESCRIPTION	QTY
		1 2 3 4	
1	103449501	Bead, Ferrite, Tdk	A/R
2	103449601	Bead, Ferrite, Fair-rite	A/R
3	8639	Tie Wrap, 11" Nylon	A/R
4	8990	Tie Wrap, 8" Nylon	A/R

13

E

ELECTRIC MOTOR

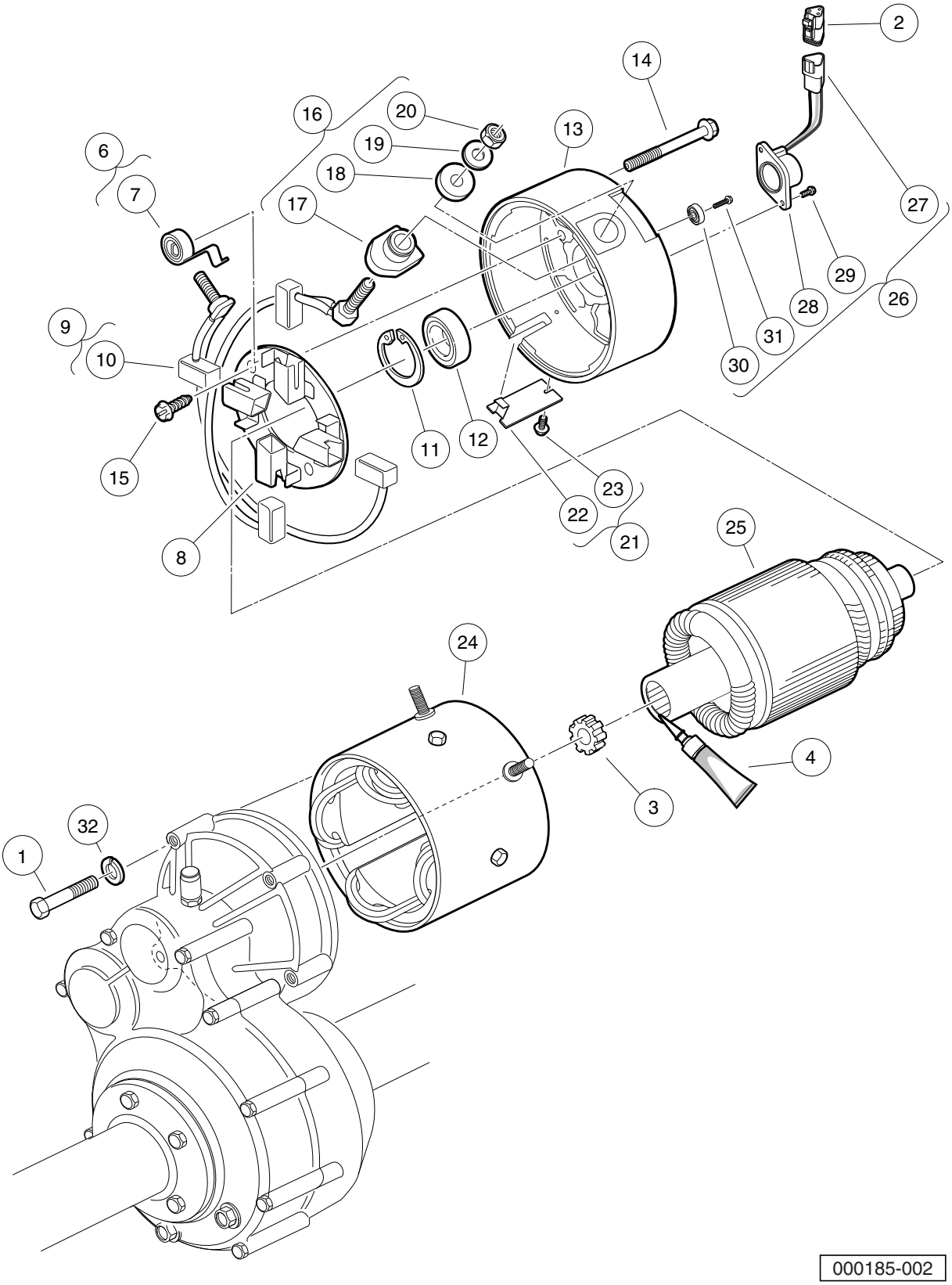
2
14
16
20
13
19
6
18
7
17
27
29
28
26
9
31
10
30
11
12
15
23
22
21
8
25
24
4
3
32
1
000185-002

MOTOR (MODEL EJ8-4001A) – ELECTRIC VEHICLE

ITEM	PART NO.	DESCRIPTION	QTY
		1 2 3 4	
1	1014201	Screw, 1/4-20 X 2.25 Hex Cap	3
2	101920101	Kit, 3-Pin Wedge Lock	1
3	102235201	Bumper, Drive Unit	1
4	102243403	Lubricant, Moly-Teflon (Single-Use Tube)	1
5	103572501	IQ Electric Motor, 48-VDC 3.3 hp (includes items 6 through 26)	1
6	102186001	Spring Kit, Motor Brush (includes item 7)	1
7	N/A	Spring, Brush, S-g	4
8	102186101	Brush Box Assembly	1
9	102186201	Brush Kit, Motor (includes item 10)	1
10	N/A	Assembly, Brush and Terminal	2
11	N/A	Ring, 2.24" Internal Retaining	1
12	102186401	Bearing, Ball	1
13	102186701	End Cap, Motor	1
14	N/A	Screw, 1/4-20 X 2.25 Hex-Head Washer	2
15	102186901	Screw, #8-32 X .5 Hex-Head	2
16	102187101	Hardware Kit, Motor Terminal (includes items 17 through 20)	2
17	N/A	Bushing, Nylon	2
18	N/A	Washer, Nylon Flat	2
19	N/A	Washer, Flat, 5/16 Steel	2
20	N/A	Nut, Brass Hex, 5/16 - 18	2
21	102187201	Plate Kit, Motor Cover (includes items 22 and 23)	1
22	N/A	Assembly, Cover Plate	1
23	N/A	Screw, #8-32 x 0.375, Taptite Thread	1
24	102704701	Frame and Field Assembly	1
25	102704801	Armature Assembly	1
26	102704901	Kit, Speed Sensor (includes items 27 through 31)	1
27	101942301	Kit, 3-Pin Wedge Lock	1
28	N/A	Sensor, Motor Speed, ADC	1
29	N/A	Screw, #8-32, Taptite Thread	2
30	N/A	Magnet, ADC Motor	1
31	N/A	Screw, 1/4-20 x 0.5	1
32	451	Lockwasher, 1/4 Split	3

Note: The F1 and F2 terminal posts on the EJ8-4001A motor have 1/4 - 20 thread.

14

E

TRANSAXLE – ELECTRIC VEHICLES

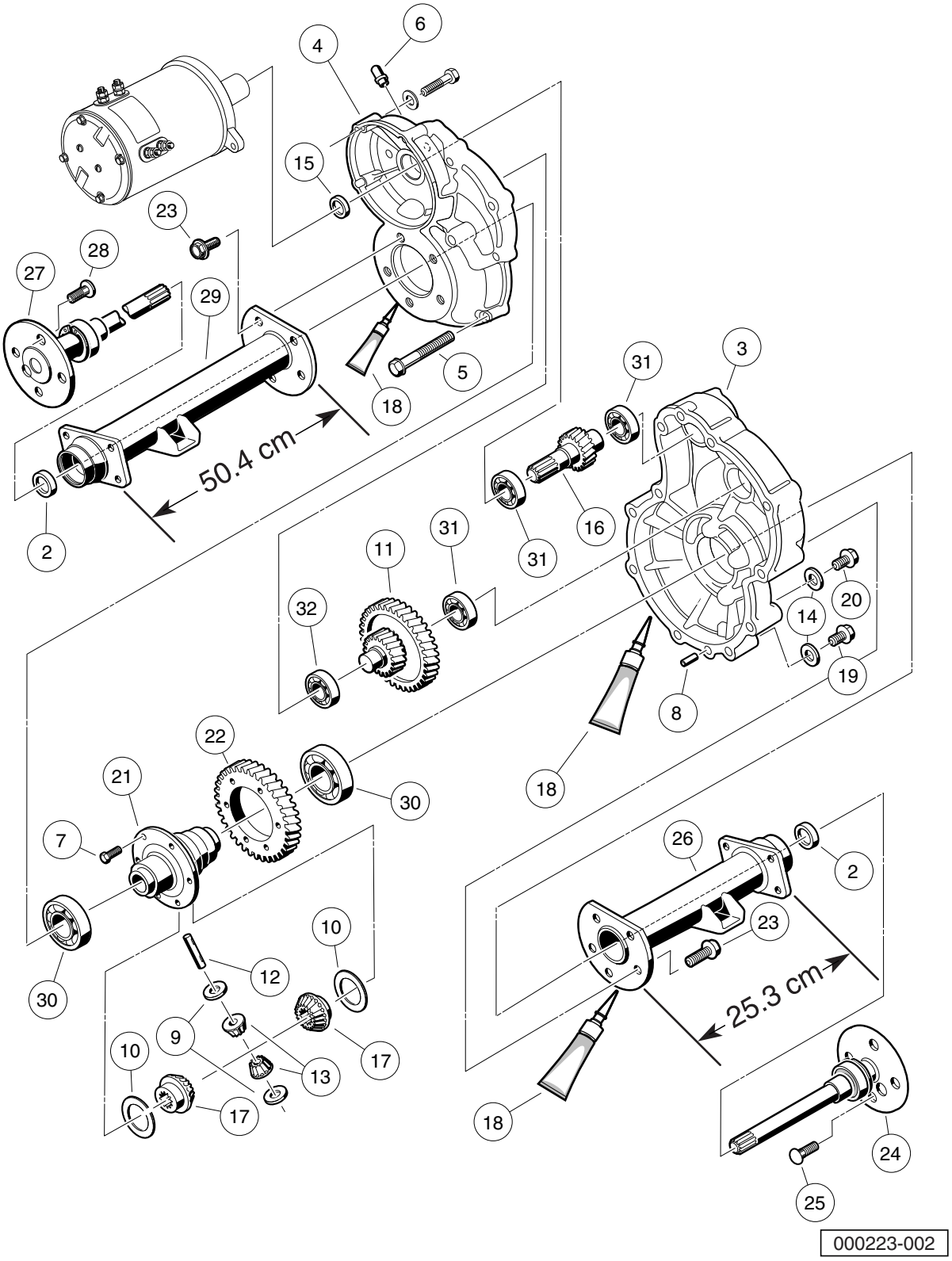
6
4
15
23
28
27
29
5
18
50.4 cm
2
31
3
16
31
31
11
32
20
14
19
8
18
22
21
30
7
30
10
12
9
10
13
17
17
26
2
23
25.3 cm
18
24
25
000223-002

ITEM	PART NO.	DESCRIPTION	QTY
		1 2 3 4	
1	102771701	Transaxle, Electric (includes items 2 through 32)	1
2	1013794	Axle Shaft Oil Seal	2
3	101895401	Gear Case, Driver-Side	1
4	101895501	Gear Case, Passenger-Side	1
5	101897001	Screw, M8-1.25 X 60mm Hex-Head	11
6	101897201	Breather	1
7	101897401	Screw, M10-1.25 X 25mm	6
8	101897601	Pin, 11mm OD X 8.5mm ID X 10mm	2
9	101903601	Washer, Thrust	2
10	101903701	Washer, Thrust	2
11	101906901	Intermediate Shaft Assembly	1
12	101922101	Pin, 15.99mm X 88.7mm Dowel	1
13	101923001	Gear, Differential Idler	2
14	101923201	Gasket	2
15	101923501	Seal, Lip	1
16	N/A	Shaft, Input	1
17	101923901	Gear, Differential	2
18	101928701	Liquid Gasket (Transaxle case)	1
19	101972101	Plug, M14-1.5 X 12mm Magnetic	1
20	101972201	Plug, M14-1.5 X 12mm Hex	1
21	102356601	Housing, Differential, 6 Bolt	1
22	102356801	Gear, Differential Output, 6-Bolt	1
23	102357001	Screw, Flg Hd M10 X 1.5 X 30	10
24	102886301	Axle Assembly, Driver-Side (includes item 25)	1
25	101922201	Lug Stud	4
26	102886401	Tube, Axle, Driver-Side	1
27	102886501	Axle Assembly, Passenger-Side (includes item 28)	1
28	101922201	Lug Stud	4
29	102886601	Tube, Axle, Passenger-Side	1
30	7330	Inner Axle Tube Bearing	2
31	7335	Bearing	3
32	7336	Bearing	1

15

E

BATTERY CHARGERS – HIGH-FREQUENCY

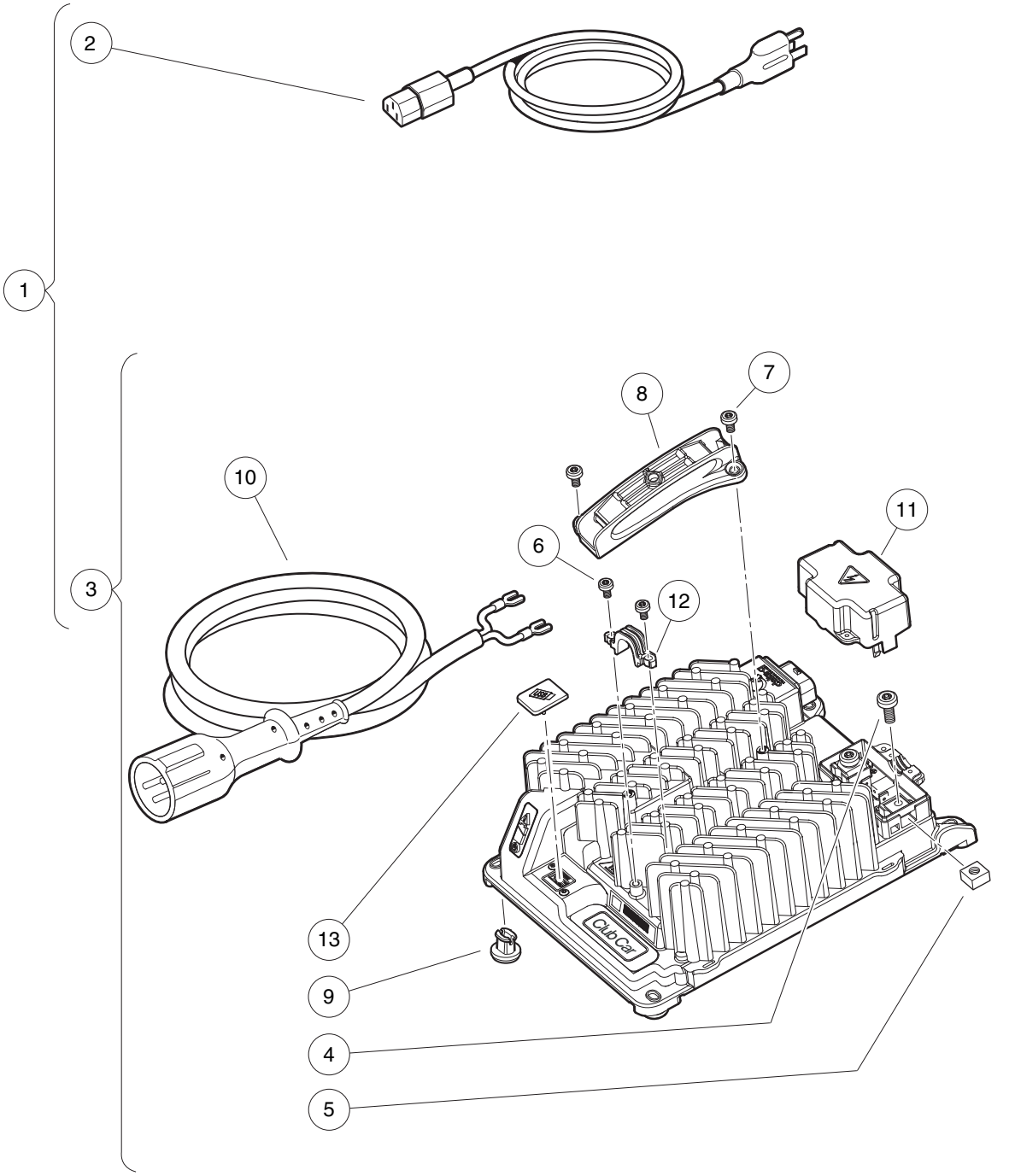

000610-002

BATTERY CHARGER, HIGH-FREQUENCY – U.S./CANADA

ITEM	PART NO.	DESCRIPTION	QTY
		1 2 3 4	
1	105095201	Charger, High-Freq, Service, 9ft Yel DC, 6ft AC, US/Canada (includes items 2 and 3)	1
2	104024201	Cord, AC, Nema To Iec320, 6ft (1.83 m), U.S./Canada	1
3	104029601	Charger, Asm, High-Freq, 9ft (2.74 m) Yellow DC Cord (includes items 4 through 13)	1
4	104024501	Screw, M6, Torx Head	2
5	104024601	Nut, M6, Square, Captured	2
6	104028901	Screw, M4 X .70, Pan Hd, Torx	2
7	104029001	Screw, M5 X .80, Pan Hd, Torx	2
8	105003601	Handle, Charger, High-Freq	1
9	105003701	Foot, Charger, High-Freq	4
10	105070101	Cord, DC, Yellow, 9ft (2.74 m)	1
11	105092301	Cover, DC Terminal Block, High-Freq Charger	1
12	105093101	Strain Relief, High-Freq, External, Charger	1
13	105123801	Cover, USB	1

Note: This charger includes both an AC cord and DC cord. For additional cord lengths that may be used with this charger, see the Battery Charger Cords page.

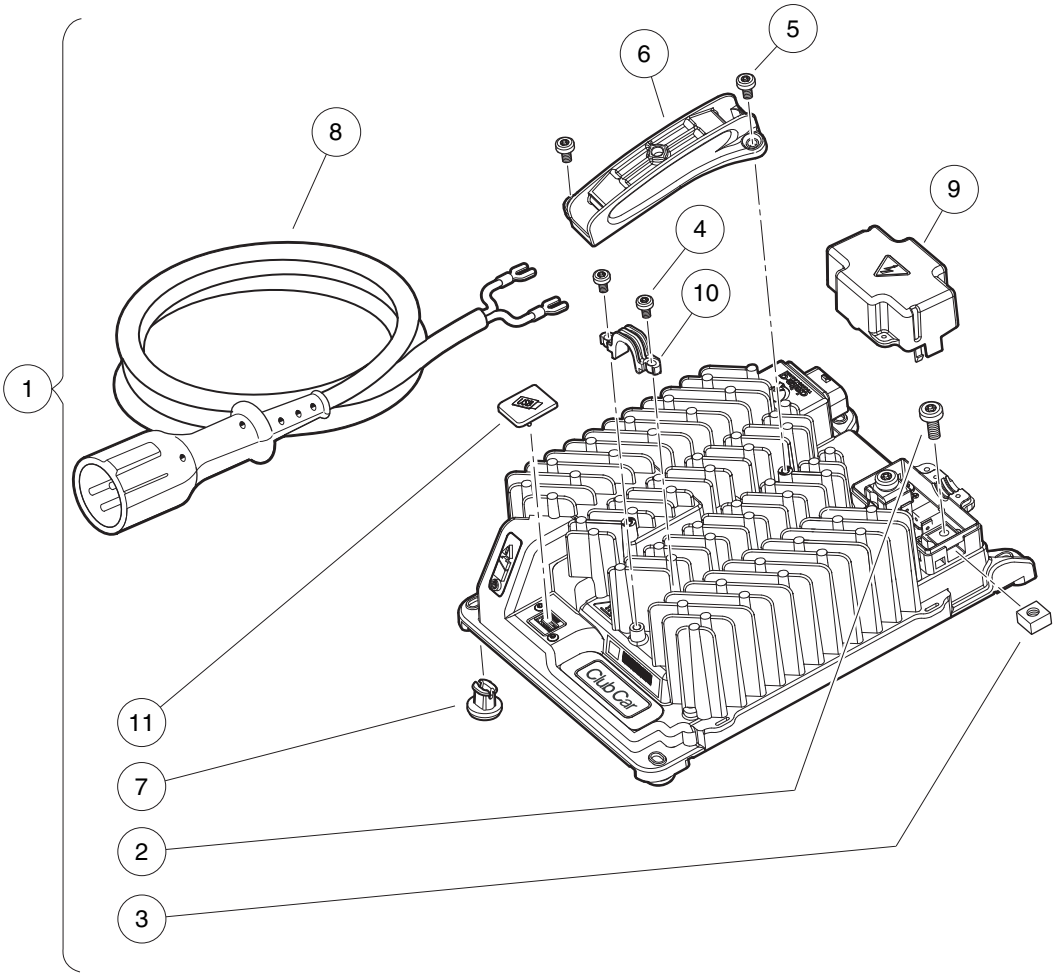

000610-003

BATTERY CHARGER, HIGH-FREQ., 2.74 M DC CORD – GLOBAL

ITEM	PART NO.	DESCRIPTION	QTY
		1 2 3 4	
1	104029601	Charger, Asm, High-Freq, 9ft (2.74 m) Yellow DC Cord (includes items 2 through 11)	1
2	104024501	Screw, M6, Torx Head	2
3	104024601	Nut, M6, Square, Captured	2
4	104028901	Screw, M4 X .70, Pan Hd, Torx	2
5	104029001	Screw, M5 X .80, Pan Hd, Torx	2
6	105003601	Handle, Charger, High-Freq	1
7	105003701	Foot, Charger, High-Freq	4
8	105070101	Cord, DC, Yellow, 9ft (2.74 m)	1
9	105092301	Cover, DC Terminal Block, High-Freq Charger	1
10	105093101	Strain Relief, High-Freq, External, Charger	1
11	105123801	Cover, USB	1

Note: This charger does not include the AC cord. To complete the charger, choose the appropriate type and length of AC cord found on the Battery Charger Cords page.

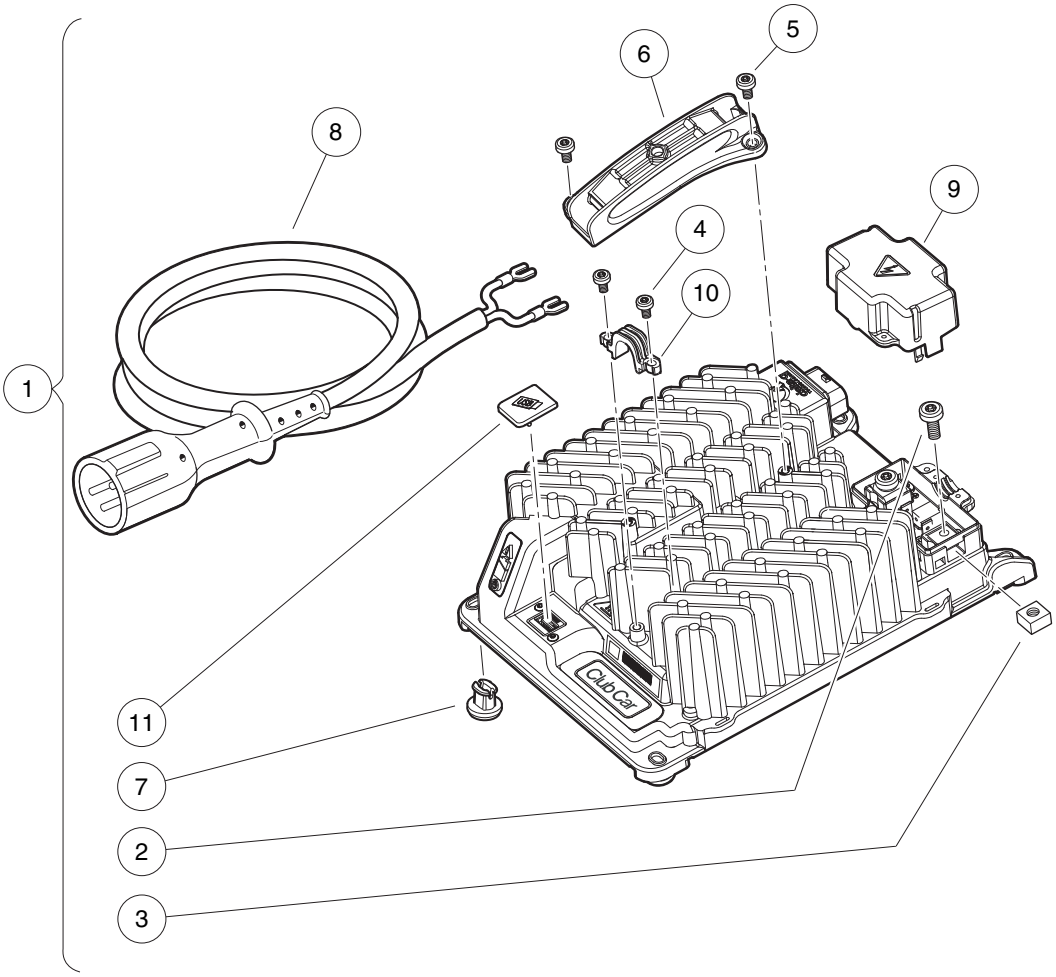

000610-003

BATTERY CHARGER, HIGH-FREQ., 3.66 M DC CORD – GLOBAL

ITEM	PART NO.	DESCRIPTION	QTY
		1 2 3 4	
1	104029602	Charger, Asm, High-Freq, 12ft (3.66 m) Yellow DC Cord (includes items 2 through 11) ..	1
2	104024501	Screw, M6, Torx Head	2
3	104024601	Nut, M6, Square, Captured	2
4	104028901	Screw, M4 X .70, Pan Hd, Torx	2
5	104029001	Screw, M5 X .80, Pan Hd, Torx	2
6	105003601	Handle, Charger, High-Freq	1
7	105003701	Foot, Charger, High-Freq	4
8	105070102	Cord, DC, Yellow, 12ft (3.66 m)	1
9	105092301	Cover, DC Terminal Block, High-Freq Charger	1
10	105093101	Strain Relief, High-Freq, External, Charger	1
11	105123801	Cover, USB	1

Note: This charger does not include the AC cord. To complete the charger, choose the appropriate type and length of AC cord found on the Battery Charger Cords page.

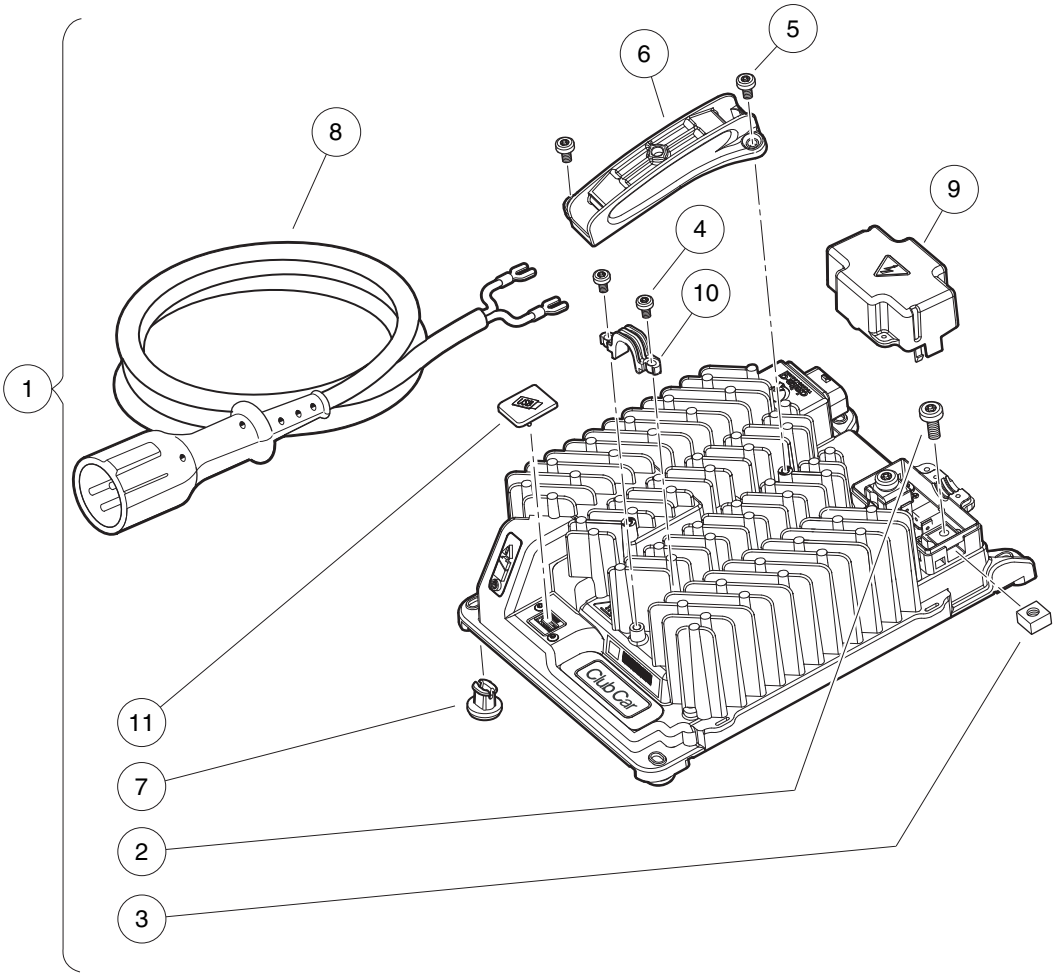

000610-003

BATTERY CHARGER, HIGH-FREQ., 6.1 M DC CORD – GLOBAL

ITEM	PART NO.	DESCRIPTION	QTY
		1 2 3 4	
1	104029603	Charger, Asm, High-Freq, 20ft (6.1 m) Yellow DC Cord (includes items 2 through 11)	1
2	104024501	Screw, M6, Torx Head	2
3	104024601	Nut, M6, Square, Captured	2
4	104028901	Screw, M4 X .70, Pan Hd, Torx	2
5	104029001	Screw, M5 X .80, Pan Hd, Torx	2
6	105003601	Handle, Charger, High-Freq	1
7	105003701	Foot, Charger, High-Freq	4
8	105070103	Cord, DC, Yellow, 20ft (6.1 m)	1
9	105092301	Cover, DC Terminal Block, High-Freq Charger	1
10	105093101	Strain Relief, High-Freq, External, Charger	1
11	105123801	Cover, USB	1

Note: This charger does not include the AC cord. To complete the charger, choose the appropriate type and length of AC cord found on the Battery Charger Cords page.

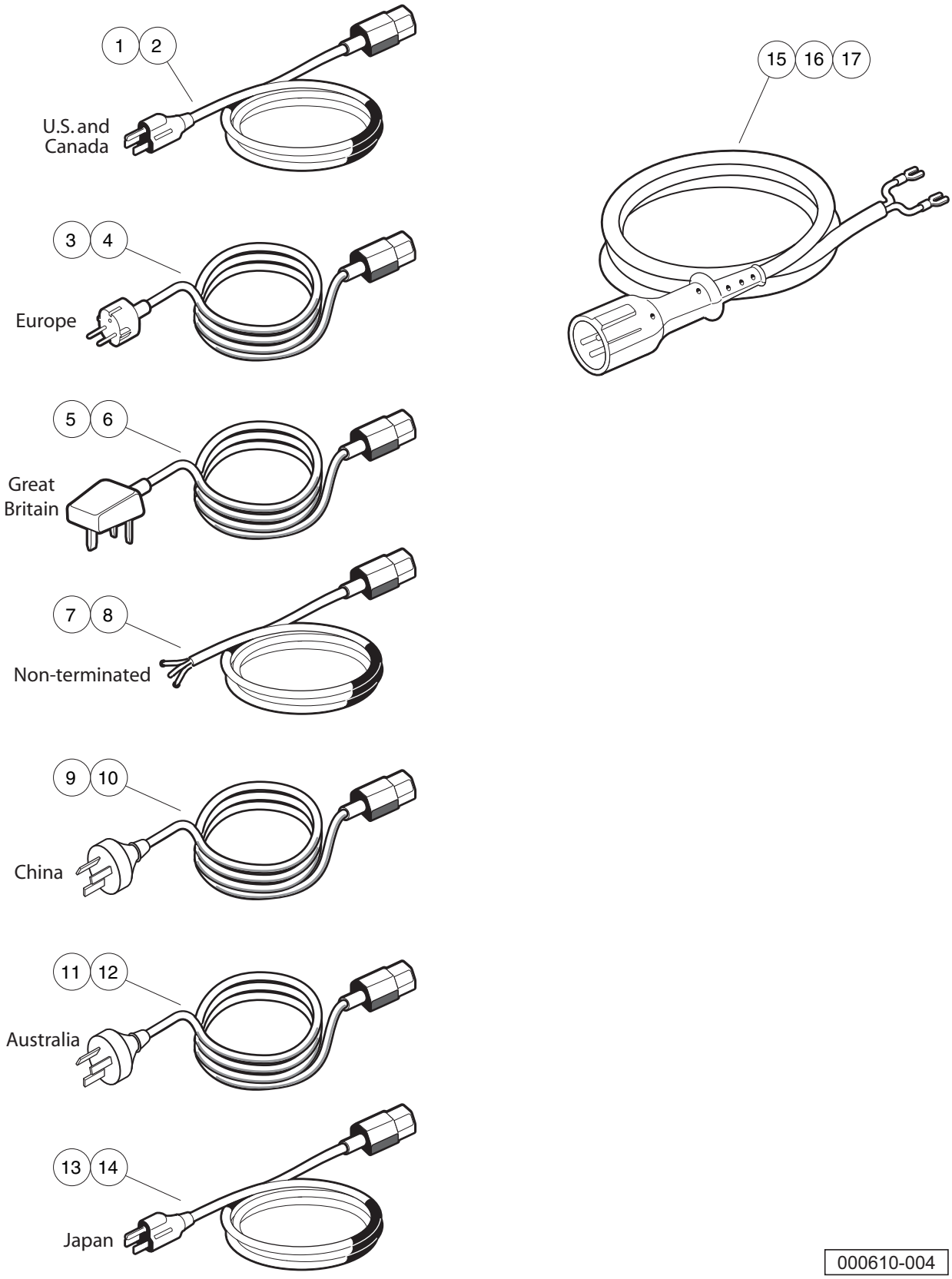
1
2
U.S. and Canada
3
4
Europe
5
6
Great Britain
7
8
Non-terminated
9
10
China
11
12
Australia
13
14
Japan
15
16
17
000610-004

CORDS – BATTERY CHARGER, HIGH-FREQUENCY

ITEM	PART NO.	DESCRIPTION	QTY
		1 2 3 4	
1	104024201	Cord, AC, Nema To Iec320, 6ft (1.83 m), U.S./Canada	A/R
2	104024202	Cord, AC, Nema To Iec320, 9ft (2.74 m), U.S./Canada	A/R
3	104024401	Cord, AC, Iec320, 6ft (1.83 m), Europe	A/R
4	104024402	Cord, AC, Iec320, 9ft (2.74 m), Europe	A/R
5	104028501	Cord, AC, Iec320, 6ft (1.83 m), Great Britain	A/R
6	104028502	Cord, AC, Iec320, 9ft (2.74 m), Great Britain	A/R
7	104028601	Cord, AC, Iec320, 6ft (1.83 m), Non-terminated	A/R
8	104028602	Cord, AC, Iec320, 9ft (2.74 m), Non-terminated	A/R
9	105068201	Cord, AC, Iec320, 6ft (1.83 m), China	A/R
10	105068202	Cord, AC, Iec320, 9ft (2.74 m), China	A/R
11	105068301	Cord, AC, Iec320, 6ft (1.83 m), Australia	A/R
12	105068302	Cord, AC, Iec320, 9ft (2.74 m), Australia	A/R
13	105068401	Cord, AC, Iec320, 6ft (1.83 m), Japan	A/R
14	105068402	Cord, AC, Iec320, 9ft (2.74 m), Japan	A/R
15	105070101	Cord, DC, Yellow, 9ft (2.74 m)	A/R
16	105070102	Cord, DC, Yellow, 12ft (3.66 m)	A/R
17	105070103	Cord, DC, Yellow, 20ft (6.1 m)	A/R

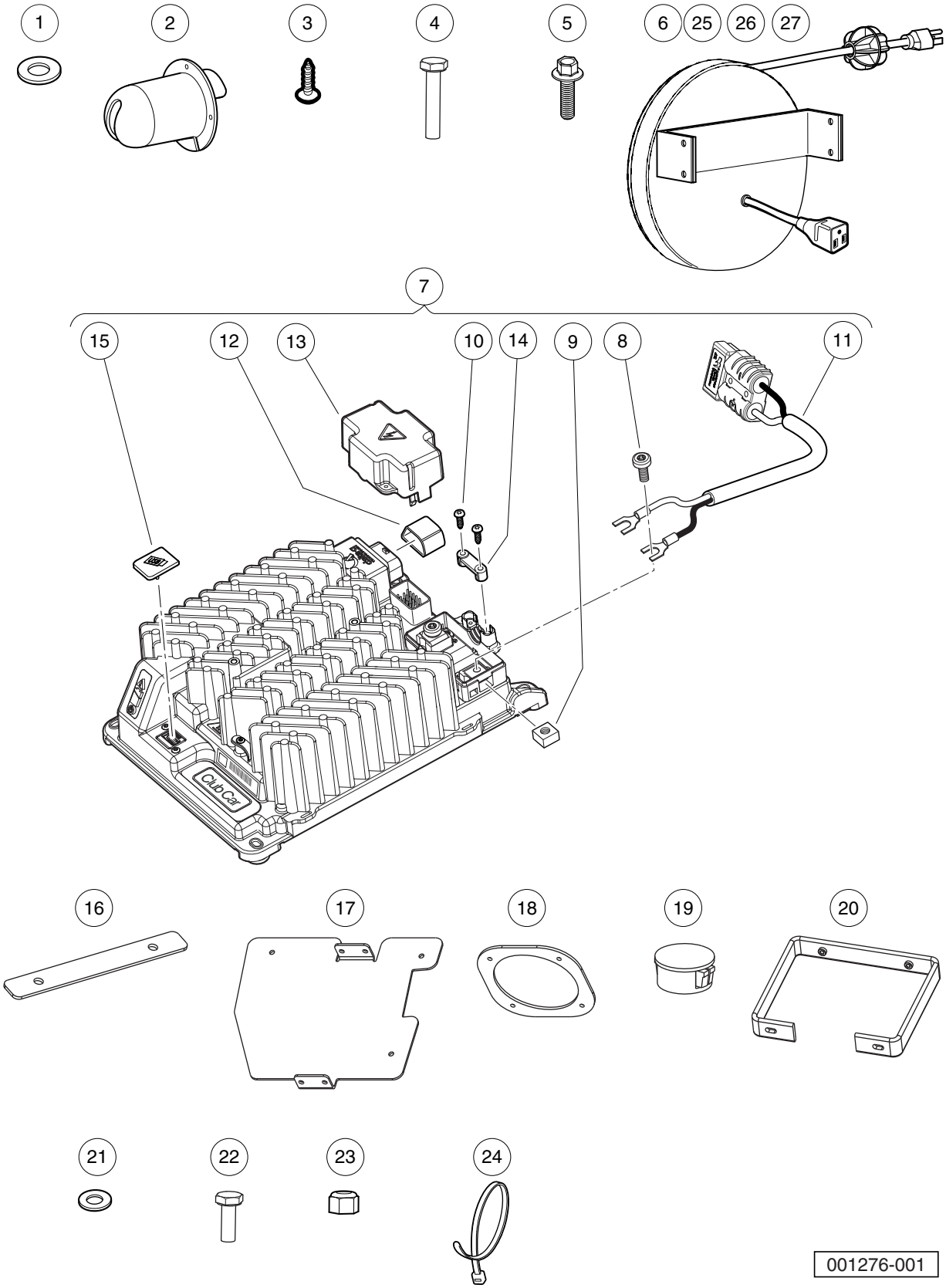
1
2
3
4
5
6
25
26
27
7
15
12
13
10
14
9
8
11
16
17
18
19
20
21
22
23
24
001276-001

BATTERY CHARGER, HIGH-FREQUENCY – ONBOARD

ITEM	PART NO.	DESCRIPTION	QTY
		1 2 3 4	
1	1014306	Washer, 1/4" Type B Flat	3
2	1016673	Housing, Cord Reel	1
3	101832001	Screw, #7-19 X 0.625 Phillips Pan-Head Tap	4
4	101861901	Screw, 1/4-20 X 1.125 Hex Cap	4
5	102541401	Bolt-m6x1.0x20 Hex Flhd Blk-l	4
6	103872701	Cord Reel, Hf Charger	1
7	105083001	Charger, Asm, High-Freq, Onboard (includes items 8 through 15)	1
8	104024501	Screw, M6, Torx Head	2
9	104024601	Nut, M6, Square, Captured	2
10	104029301	Screw, M3x1.5, Plastic Tapping	2
11	105084401	Cord, DC, Onboard	1
12	105086801	Sleeve, Iec 320 C14	1
13	105092301	Cover, DC Terminal Block, High-Freq Charger	1
14	105094101	Strain Relief, DC Block, High-Freq, Onboard, Charger	1
15	105123801	Cover, USB	1
16	105299001	Plate, Charger, Mtg, Ubdy	2
17	105299101	Plate, Cord Reel, Mtg, Unbody	1
18	105299601	Plate, Backing, Charge Port	1
19	105300801	Plug, Push In, 61/64" Diameter	1
20	105315201	Asm, Bracket, Obc Eric Mount	2
21	332	Washer, 1/4 Type A Narrow Flat	8
22	7847	Screw, 1/4-20 X 0.75 Hex-Head Cap	7
23	8233	Locknut, 1/4-20, Nylon Insert	4
24	8990	Tie Wrap, 8" Nylon	1
25	SVP738601	Cord Reel Retract 3ft 14ga Uk	1
26	SVP738701	Cord Reel Retract 3ft 14ga Eu	1
27	SVP738801	Cord Reel Retract 3ft 14ga Aus	1

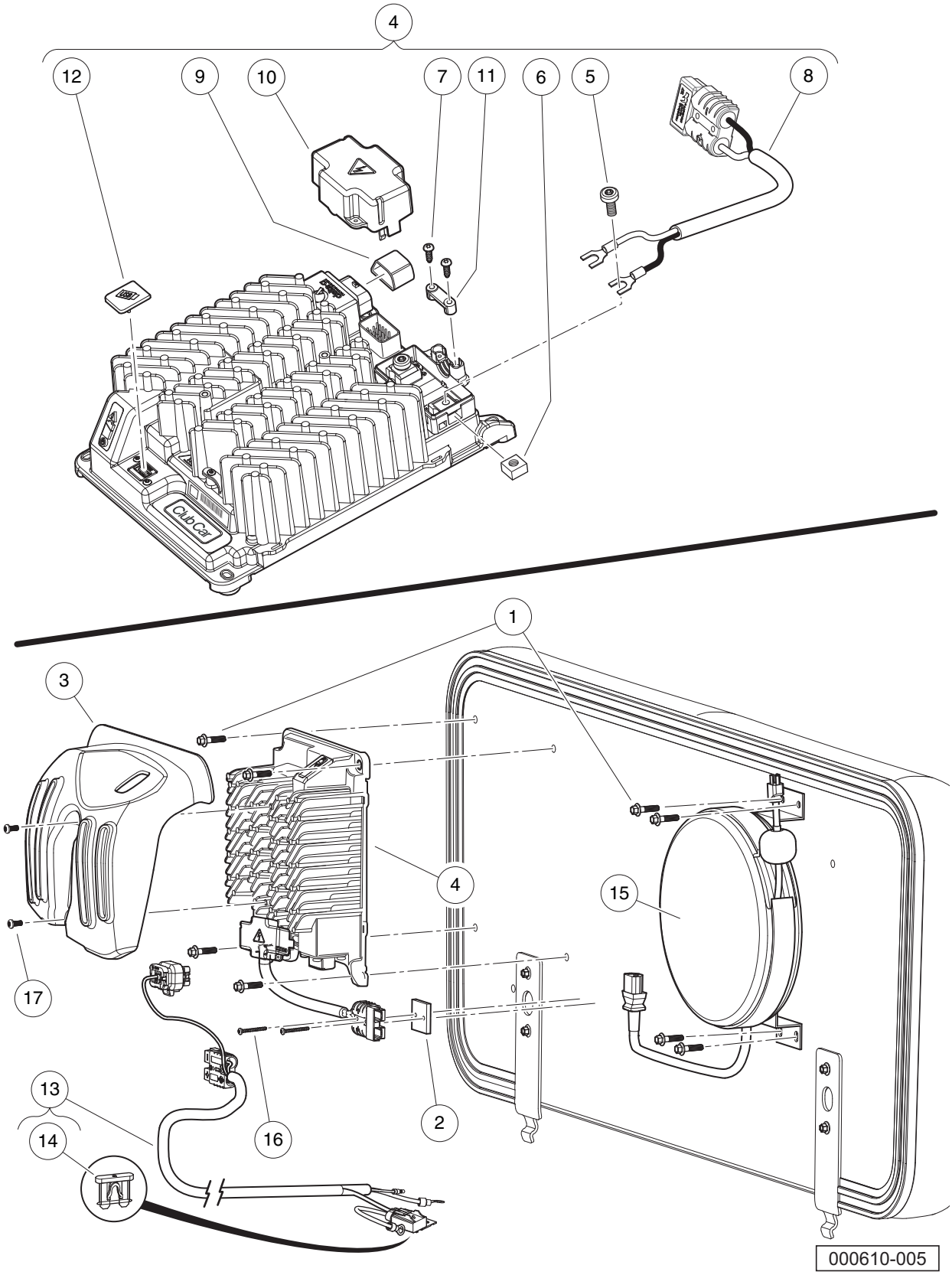
4
12
9
10
7
11
6
5
8
Club Car
1
3
4
15
17
13
14
16
2
000610-005

BATTERY CHARGER, HIGH-FREQUENCY – ONBOARD (FOR REAR-FACING-SEAT)

ITEM	PART NO.	DESCRIPTION	QTY
		1 2 3 4	
1	102541425	Bolt, M6x1.0x25, Hex Flhd, Blk-I	8
2	105082601	Insulation, Thermal	1
3	105082801	Shield, Charger, High-Freq	1
4	105083001	Charger, Asm, High-Freq, Onboard (includes items 5 through 12)	1
5	104024501	Screw, M6, Torx Head	2
6	104024601	Nut, M6, Square, Captured	2
7	104029301	Screw, M3x1.5, Plastic Tapping	2
8	105084401	Cord, DC, Onboard	1
9	105086801	Sleeve, Iec 320 C14	1
10	105092301	Cover, DC Terminal Block, High-Freq Charger	1
11	105094101	Strain Relief, DC Block, High-Freq, Onboard, Charger	1
12	105123801	Cover, USB	1
13	105084301	Harness, Wire, High-Freq Onboard Charger, 4-Pass, Prec (includes item 14)	1
14	102492301	Fuse, 30-Amp	1
15	105084501	Cord Reel, AC, Retractable, High-Freq Charger, Onboard	1
16	105086901	Screw, #6-20 Type Abx1.25 Pan	2
17	105101001	Screw, M5-0.8x10, Torx, Trs	2

Note: Used on 4-passenger vehicle with rear-facing back seat.

MAINTENANCE AND SERVICE TOOLS

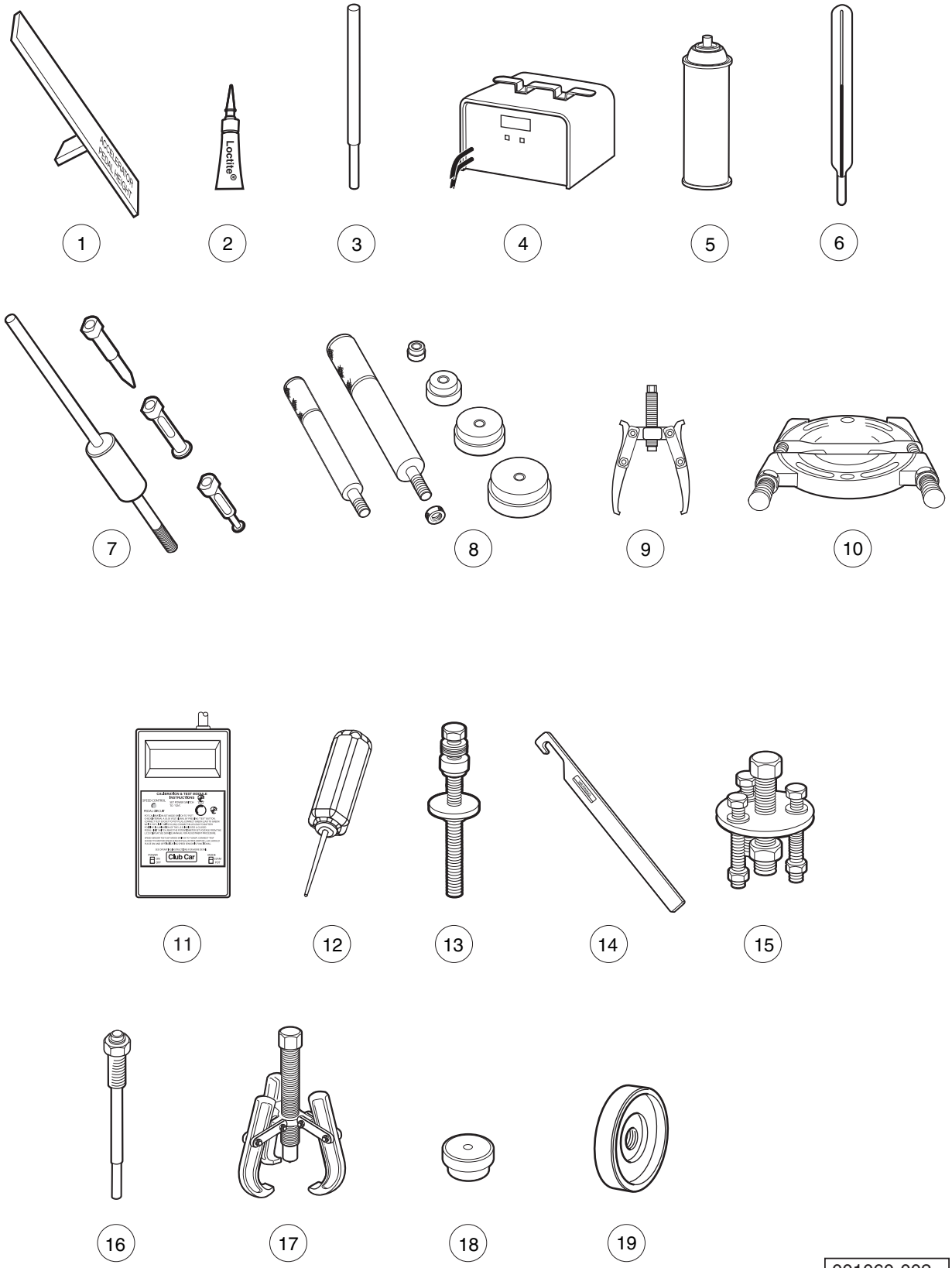
ACCELERATOR
INSTALLATION
Loctite®
1
2
3
4
5
6
7
8
9
10
Club Car
11
12
13
14
15
16
17
18
19

001060-002

ITEM	PART NO.	DESCRIPTION	QTY GAS	QTY ELEC
		1 2 3 4 The following tool list includes all tools available from Club Car for maintenance and service procedures for gasoline and electric golf and utlity vehilces. Be sure to carefully examine the tool list for applicability to your vehicle before ordering.		
1	101871001	Accelerator Pedal Adjustment Tool (Utility Vehicles)	1	1
2	101813202	Adhesive, Guide Ring, 3-Gram Tube		1
3	101641202	Arbor	1	
4	101831901	Battery Discharge Machine, 36/48 Volt		1
5	1014305	Battery Terminal Protector Spray	1	1
6	1011767	Battery Thermometer	1	1
7	1016417	Bearing and Oil Seal Remover Assembly	1	1
8	1016416	Bearing Driver Set	1	1
9	1012811	Bearing Puller	1	1
10	1012812	Bearing Puller Wedge Attachment	1	1
11	101887101	Calibration Test Module		1
12	102562401	Charger Bezel Tool		1
		Clutch Tools (items 14 - 20)	1	
13	101808401	Clutch Cam Installation Tool (for Subaru and Kawasaki engines)	1	
14	105072501	Drive Clutch Holder Tool Assembly (for Subaru and Kawasaki engines)	1	
15	1014497	Drive Clutch Hub Puller (for Subaru and Kawasaki engines)	1	
16	1014496	Drive Clutch Puller (for Subaru and Kawasaki engines)	1	
17	1014508	Driven Clutch Cam Puller (for Subaru and Kawasaki engines)	1	
18	1014507	Driven Clutch Puller Plug (for Subaru and Kawasaki engines)	1	
19	101809101	Press Weldment (for Subaru and Kawasaki engines)	1	
		Please refer to the maintenance and service manual for proper tool application.		

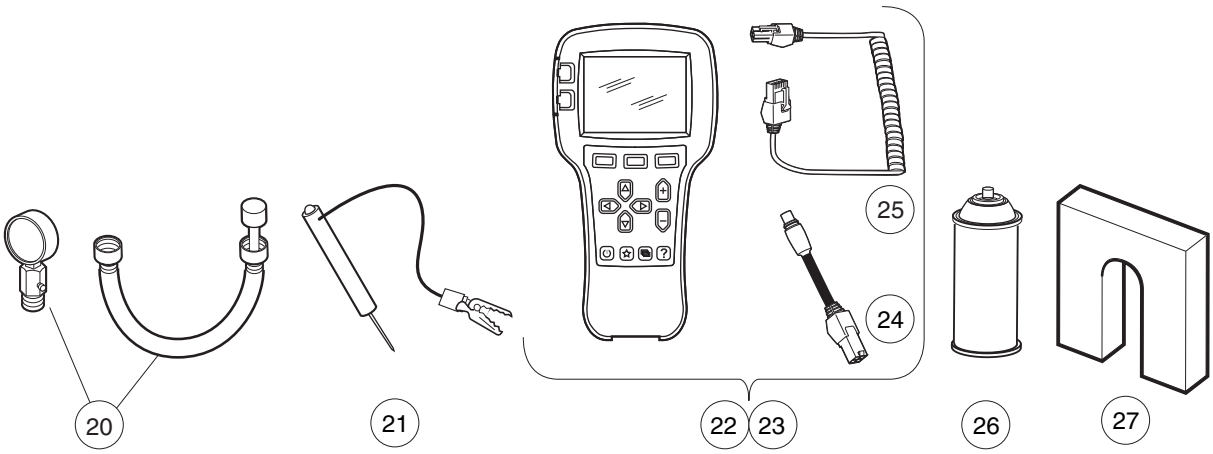
20
21
22
23
24
25
26
27

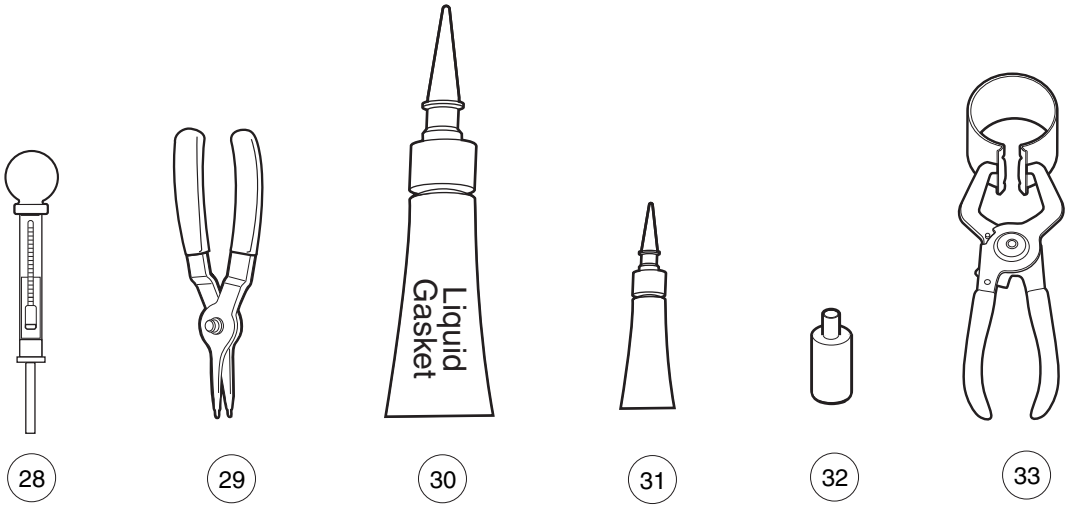
Liquid
Gasket
28
29
30
31
32
33

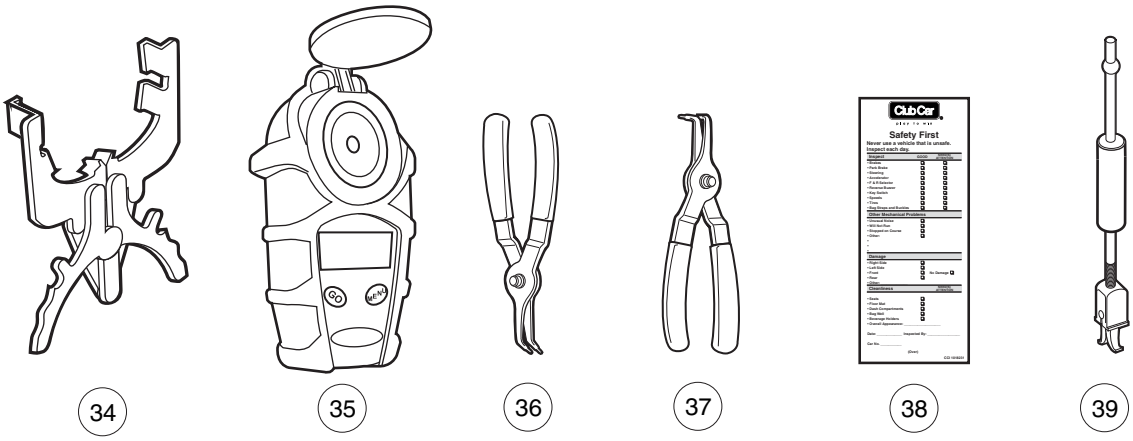
Club Car
Safety First
34
35
36
37
38
39

001061-002

MAINTENANCE AND SERVICE TOOLS, CONTINUED

ITEM	PART NO.	DESCRIPTION	QTY GAS	QTY ELEC
		1 2 3 4		
20	101641002	Compression Gauge and Adapter	1	
21	1011273	Continuity Tester	1	1
22	105234501	Controller Diagnostic Tool (CDT) User Kit (includes items 25 and 26)		1
23	105234502	Controller Diagnostic Tool (CDT) OEM Kit (includes items 25 and 26)		1
24	102251501	Adaptor, Cable		1
25	105209601	CDT Cable		1
26	1012151	Dry Moly Lubricant	1	1
27	1016418	Gear Yoke	1	1
28	1011478	Hydrometer	1	1
29	1013593	Internal Retaining Ring Pliers	1	1
30	101928701	Liquid Gasket (transaxle case)	1	1
31	102243402	Moly-Teflon Lubricant (4-oz. (113-gram) tube)		1
32	102587201	Paint Pen, Touch-Up, Precedent Underbody ,Äì Black	1	1
33	1016414	Piston Ring Compressor Kit	1	
34	1016415	Piston Ring Pliers	1	
35	AM1285701	Refractometer	1	1
36	1012549	Retaining Ring Pliers, 45¬× External	1	1
37	1012560	Retaining Ring Pliers, 90¬× Internal	1	1
38	101823101	Safety First Card (50 per pack)	1	1
39	1012809	Seal Puller	1	1

Please refer to the maintenance and service manual for proper tool application.

40

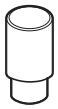

41

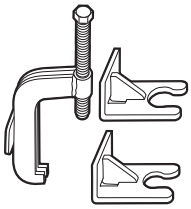

42

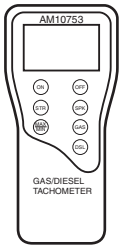

43

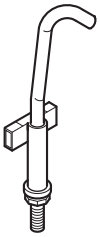

44

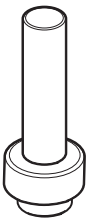

45

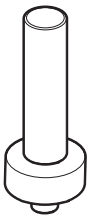

46

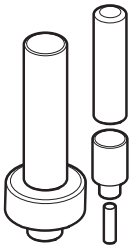

47

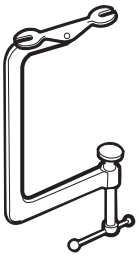

48

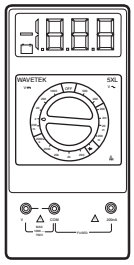

49

001062-001

MAINTENANCE AND SERVICE TOOLS, CONTINUED

ITEM	PART NO.	DESCRIPTION	QTY GAS	QTY ELEC
		1 2 3 4		
40	1014264	Steering Column Bearing Press Tool	1	1
41	1014259	Steering Column Retaining Ring Tool	1	1
42	102061201	Steering Wheel Puller Tool	1	1
43	AM10753	Tachometer (includes gasoline engine pick up lead only)	1	
44	102570401	Tool, Tensioning, Starter Generator (For Precedent vehicles)	1	
45	1014162	Transaxle Axle Seal Tool (for electric vehicles)		1
46	1014161	Transaxle Pinion Seal Tool (for electric vehicles)		1
47	1014115	Transmission Tool Kit (for electric vehicles)		1
48	101641101	Valve Spring Compressor	1	
49	1011480	Volt Ohm Meter	1	1

Please refer to the maintenance and service manual for proper tool application.

INDEX

Part Number and *Page*

AM10753 *17-7*
AM10079 *4-11*, *4-13*, *4-15*
AM10419 *11-7*
AM10682 *2-3*
AM1231201 *1-25*
AM1263401 *2-5*
AM1300001 *13-15*
AM1300101 *13-15*
AM1300201 *13-15*
AM1300301 *13-15*
SVP738601 *16-13*
SVP738701 *16-13*
SVP738801 *16-13*
183 *11-5*
332 *12-7*, *16-13*
334 *11-5*
451 *14-3*
706 *6-13*
1241 *8-5*, *8-7*
1242 *5-7*, *7-11*, *7-13*, *7-15*, *7-19*
1620 *1-25*
1624 *7-11*, *7-13*
7174 *7-11*, *7-13*, *10-3*
7310 *2-3*, *2-5*
7330 *15-3*
7335 *15-3*
7336 *15-3*
7591 *8-11*
7847 *16-13*
7893 *7-15*, *7-19*
8056 *7-23*
8057 *7-23*, *12-3*
8058 *7-23*, *12-3*
8233 *9-15*, *12-7*, *12-9*, *16-13*
8450 *11-5*
8639 *13-5*, *13-19*
8717 *12-3*
8745 *6-13*
8754 *7-11*, *7-13*
8990 *1-39*, *4-3*, *4-5*, *4-7*, *4-9*, *6-9*, *12-5*, *13-5*, *13-19*, *16-13*
1010145 *6-15*, *6-17*, *6-19*
1010434 *1-21*, *1-45*, *1-47*, *1-49*, *1-51*, *1-53*, *5-9*, *5-11*, *5-13*, *5-15*, *13-11*
1010436 *1-25*
1010577 *8-5*, *8-7*
1010829 *5-7*
1010958 *13-9*, *13-11*
1010984 *2-3*
1011114 *9-15*, *12-9*
1011137 *5-5*
1011273 *17-5*
1011415 *6-15*, *6-17*, *6-19*
1011478 *17-5*
1011480 *17-7*
1011571 *4-15*
1011610 *4-15*
1011767 *17-3*
1012151 *17-5*
1012180 *6-15*, *6-17*, *6-19*
1012181 *6-19*
1012182 *6-19*
1012431 *7-23*, *12-3*
1012505 *4-11*, *4-13*, *4-15*
1012528 *10-3*, *13-17*
1012549 *17-5*
1012560 *17-5*
1012565 *6-3*, *6-5*
1012566 *6-3*, *6-5*
1012571 *1-15*
1012594 *7-23*, *12-3*
1012649 *9-9*
1012809 *17-5*
1012811 *17-3*
1012812 *17-3*
1012836 *11-7*
1012987 *12-3*
1013042 *6-9*
1013164 *6-15*, *6-17*, *6-19*
1013589 *12-3*
1013590 *12-3*
1013591 *12-3*
1013593 *17-5*
1013609 *7-15*, *7-19*
1013734 *13-17*
1013746 *9-9*
1013794 *15-3*
1013857 *4-3*, *4-5*, *4-7*, *4-9*, *4-15*
1013924 *5-3*, *5-5*, *8-5*, *8-7*
1014007 *9-15*, *12-9*
1014051 *11-5*
1014055 *11-5*
1014056 *11-5*
1014057 *11-5*
1014058 *11-5*
1014059 *11-5*
1014062 *11-5*
1014063 *11-5*
1014065 *11-5*, *12-3*
1014072 *11-7*
1014078 *11-7*
1014080 *11-7*
1014115 *17-7*
1014145 *12-3*
1014161 *17-7*
1014162 *17-7*
1014201 *14-3*
1014259 *17-7*
1014264 *17-7*
1014287 *11-5*
1014288 *11-5*
1014289 *7-9*
1014304 *13-9*, *13-11*
1014305 *17-3*
1014306 *16-13*
1014375 *7-15*
1014453 *11-5*
1014454 *11-7*
1014496 *17-3*
1014497 *17-3*
1014507 *17-3*
1014508 *17-3*
1014555 *6-15*, *6-17*, *6-19*, *13-9*, *13-11*
1014727 *7-23*, *12-3*
1014789 *7-5*, *7-7*
1014807 *7-23*, *12-3*
1014902 *1-49*, *1-51*, *1-53*
1014947 *13-17*
1015064 *12-3*
1015137 *9-9*
1015524 *17-3*
1015583 *6-15*, *6-17*, *6-19*
101558302 *6-15*, *6-17*, *6-19*
101587704 *9-9*
1015932 *7-11*, *7-13*
1015969 *8-9*
1016103 *8-11*
1016154 *6-3*, *6-5*
1016201 *11-5*
1016214 *6-3*, *6-5*
1016289 *11-5*
101641002 *17-5*
101641101 *17-7*
101641202 *17-3*
1016414 *17-5*
1016415 *17-5*
1016416 *17-3*
1016417 *17-3*
1016418 *17-5*
1016630 *4-13*
1016673 *16-13*
1016801 *11-5*
1016849 *4-3*, *4-5*, *4-7*, *4-9*, *4-11*, *4-13*, *4-15*
1016851 *4-11*, *4-13*, *4-15*
1017041 *1-29*
101705701 *1-49*, *1-51*, *1-53*, *3-13*
1017145 *11-7*
1017235 *1-49*, *1-51*, *1-53*, *6-19*
1017686 *11-7*
101791101 *5-3*
101808401 *17-3*
101809101 *17-3*
101813202 *17-3*
101815501 *5-3*, *5-5*
101815502 *5-3*, *5-5*
101816501 *5-3*, *5-5*
101816502 *5-3*, *5-5*

INDEX

101823101 *17-5*
101823201 *5-3*, *5-5*
101823801 *5-3*, *5-5*
101823901 *5-3*, *5-5*
101824101 *8-11*
101825101 *3-3*, *3-9*
101830701 *4-11*, *4-13*, *4-15*
101831901 *17-3*
101832001 *13-5*, *16-13*
101833401 *11-7*
101834502 *4-11*, *4-13*, *4-15*
101834601 *8-5*, *8-7*
101835601 *4-3*, *4-5*, *4-7*, *4-9*, *4-17*, *4-19*
101850301 *6-3*, *6-5*
101851101 *4-11*, *4-13*, *4-15*
101856001 *13-7*
101861901 *16-13*
101862001 *12-7*
101865805 *13-11*
101871001 *17-3*
101884801 *8-5*, *8-7*
101886101 *9-15*, *12-9*
101887101 *17-3*
101895401 *15-3*
101895501 *15-3*
101897001 *15-3*
101897201 *15-3*
101897401 *15-3*
101897601 *15-3*
101898001 *7-15*, *7-19*
101903601 *15-3*
101903701 *15-3*
101906901 *15-3*
101908401 *7-21*, *13-7*
101920101 *14-3*
101922101 *15-3*
101922201 *15-3*
101923001 *15-3*
101923201 *15-3*
101923501 *15-3*
101923901 *15-3*
101928701 *15-3*, *17-5*
101942301 *14-3*
101954301 *1-19*
101960501 *3-5*
101963401 *8-5*, *8-7*
101972101 *15-3*
101972201 *15-3*
101979101 *7-23*, *12-3*
101985201 *1-29*
101998501 *1-19*
102022601 *6-9*
102025801 *9-7*
102051901 *4-3*, *4-5*, *4-7*, *4-9*, *4-15*
102061201 *17-7*
102155801 *11-7*
102186001 *14-3*
102186101 *14-3*
102186201 *14-3*
102186401 *14-3*
102186701 *14-3*
102186901 *14-3*
102187101 *14-3*
102187201 *14-3*
102196901 *4-11*
102199001 *4-15*
102235201 *14-3*
102240501 *13-17*
102242101 *8-5*, *8-7*, *11-7*
102243402 *17-5*
102243403 *14-3*
102251501 *17-5*
102274101 *12-17*
102279104 *1-23*
102287101 *6-11*
102287601 *6-11*
102287701 *6-11*
102288101 *6-11*, *6-13*
102288201 *6-13*
102288401 *6-13*
102288901 *6-11*
102289001 *6-9*
102289101 *6-13*
102289201 *6-13*
102289401 *6-11*
102289501 *6-11*, *6-13*
102289601 *6-11*
102289701 *6-11*
102289801 *6-13*
102289901 *6-11*
102290120 *6-3*, *6-5*, *6-7*
102292101 *1-3*
102292201 *5-9*, *5-11*, *5-13*, *5-15*
102292356 *1-11*, *1-13*, *13-9*, *13-11*
102292701 *1-13*, *1-23*
102292801 *5-7*
102296020 *1-7*, *1-27*, *4-3*, *4-5*, *4-7*, *4-9*, *7-15*, *7-19*, *9-3*, *9-5*, *9-17*
102296040 *7-15*, *7-19*, *12-3*
102296140 *1-31*, *1-33*, *1-35*
102296150 *1-27*
102296301 *1-27*
102296401 *1-31*, *1-33*, *1-35*
102296530 *1-21*, *1-45*, *1-49*, *1-51*, *1-53*
102296601 *1-23*
102296716 *13-17*
102296819 *1-11*
102296920 *13-7*
102297001 *1-11*
102297125 *9-17*
102297230 *1-21*, *1-23*, *1-25*, *1-27*, *1-29*, *9-9*
102297901 *5-7*
102298020 *1-13*, *1-15*, *13-9*, *13-11*
102298030 *1-17*, *1-23*, *1-45*, *5-9*, *5-11*, *5-13*, *5-15*
102298116 *6-7*, *8-11*
102298130 *6-7*
102298170 *6-15*, *6-17*, *6-19*
102298175 *6-15*, *6-17*, *6-19*
102298240 *1-21*, *1-45*
102298401 *1-3*, *1-5*, *1-37*, *1-39*, *6-15*, *6-17*, *6-19*
102298580 *1-3*, *6-15*, *6-17*, *6-19*
102298601 *1-3*, *1-47*, *6-15*, *6-17*, *6-19*
102298716 *1-13*, *1-23*
102298720 *1-47*, *1-49*, *1-51*, *1-53*, *4-3*, *4-5*, *4-7*, *4-9*
102298745 *1-45*, *1-47*, *1-49*, *1-51*, *1-53*
102298995 *1-3*
102299065 *1-9*, *1-37*, *1-39*, *1-43*
102299360 *1-37*, *1-39*
102299601 *1-37*, *1-39*
102353201 *6-13*
102353301 *6-13*
102353401 *6-13*
102355301 *7-15*
102356601 *15-3*
102356801 *15-3*
102357001 *15-3*
102357701 *6-13*
102400002 *1-37*, *1-39*, *1-43*
102400102 *1-37*, *1-39*, *1-43*
102400202 *1-9*
102400302 *1-9*
102410604 *8-11*, *9-15*
102411203 *9-3*, *9-5*
102411209 *9-17*
102476401 *9-15*, *12-9*
102478101 *1-27*
102478201 *1-27*
102490301 *9-15*
102491501 *11-5*, *13-9*, *13-11*
102492301 *13-5*, *16-15*
102498201 *9-15*, *12-7*, *12-9*
102500801 *5-9*, *5-11*, *5-13*, *5-15*
102501402 *1-23*
102501403 *1-23*
102501501 *1-7*
102502301 *1-23*
102502302 *1-23*
102502304 *1-23*
102502305 *1-23*
102502306 *1-23*
102502307 *1-23*
102502308 *1-23*
102502309 *1-23*
102502311 *1-23*
102502313 *1-23*
102502401 *1-7*

INDEX

102502402 *1-7*
102502404 *1-7*
102502405 *1-7*
102502406 *1-7*
102502407 *1-7*
102502408 *1-7*
102502409 *1-7*
102502411 *1-7*
102502413 *1-7*
102502501 *1-7*
102504001 *1-21*
102504201 *1-21*
102504301 *1-21*
102504802 *1-13*
102505701 *1-3*, *6-11*
102506401 *6-15*, *6-17*, *6-19*
102507801 *1-3*
102508202 *1-17*
102508401 *13-7*
102508601 *4-11*
102508901 *1-31*
102508902 *1-33*
102508903 *1-35*
102511101 *13-7*
102511601 *1-31*
102511602 *1-33*
102511603 *1-35*
102513501 *1-37*, *1-39*
102514702 *9-3*, *9-5*
102515001 *4-13*
102515101 *4-13*, *4-15*
102516901 *1-17*
102517001 *1-21*
102517601 *4-3*, *4-5*, *4-7*, *4-9*
102517901 *3-5*
102519301 *3-3*, *3-9*
102521401 *9-17*
102521901 *1-13*
102522901 *4-11*, *4-13*, *4-15*
102526201 *12-3*
102527801 *4-3*, *4-5*, *4-7*, *4-9*
102528101 *4-3*, *4-5*, *4-7*, *4-9*
102528701 *4-3*, *4-5*, *4-7*, *4-9*
102528901 *4-7*, *4-9*
102529001 *4-7*, *4-9*
102529201 *4-3*, *4-5*, *4-7*, *4-9*
102531001 *1-47*, *1-49*, *1-51*, *1-53*
102531402 *1-47*, *1-49*, *1-51*, *1-53*
102531502 *1-45*, *1-49*, *1-51*, *1-53*
102534201 *1-5*, *1-47*, *1-49*, *1-51*, *1-53*
102534404 *1-7*
102534801 *1-49*, *1-51*, *1-53*, *6-19*
102535101 *4-3*, *4-5*, *4-7*, *4-9*
102535201 *4-3*, *4-5*, *4-7*, *4-9*
102535301 *4-3*, *4-5*, *4-7*, *4-9*
102535401 *4-3*, *4-5*, *4-7*, *4-9*
102536103 *1-29*
102536601 *4-11*, *4-13*, *4-15*
102536602 *4-13*, *4-15*
102536603 *4-11*
102536604 *4-13*, *4-15*
102536605 *4-11*
102538601 *13-5*, *13-7*
102538803 *1-25*
102540301 *8-5*, *8-7*
102540601 *2-5*
102540701 *2-5*
102541401 *1-25*, *1-29*, *16-13*
102541402 *8-11*
102541425 *1-27*, *1-43*, *1-45*, *1-49*, *1-51*, *1-53*, *16-15*
102543902 *1-9*
102544201 *1-9*, *1-37*, *1-39*, *1-43*
102544301 *4-3*, *4-5*, *4-7*, *4-9*
102551901 *5-7*
102552001 *5-7*
102554901 *13-5*
102555901 *3-3*, *3-9*
102556701 *2-5*
102556801 *2-5*
102557201 *1-11*
102558201 *8-3*, *9-17*
102558301 *9-17*
102558501 *9-17*
102558601 *9-17*
102558701 *9-17*
102559401 *5-9*, *5-11*, *5-13*, *5-15*
102559701 *5-9*, *5-11*, *5-13*, *5-15*
102559901 *2-3*
102559902 *2-3*
102562401 *17-3*
102565201 *6-9*
102566001 *6-9*
102569302 *2-3*
102569311 *2-3*
102570401 *17-7*
102570905 *1-49*
102570906 *1-51*
102570907 *1-53*
102571202 *13-11*
102572401 *4-11*
102573101 *1-45*, *1-49*, *1-51*, *1-53*
102581201 *1-43*
102582401 *1-27*
102584701 *1-47*, *1-49*, *1-51*, *1-53*
102584801 *1-47*, *1-49*, *1-51*, *1-53*
102587201 *17-5*
102588501 *6-15*, *6-17*, *6-19*
102588601 *6-11*
102594301 *5-7*
102594801 *5-9*, *5-11*, *5-13*, *5-15*
102594901 *5-9*, *5-11*, *5-13*, *5-15*
102595201 *5-9*, *5-11*, *5-13*, *5-15*
102595301 *5-9*, *5-11*, *5-13*, *5-15*
102595401 *5-9*, *5-11*, *5-13*, *5-15*
102595502 *5-9*, *7-3*
102595901 *5-9*, *5-11*, *5-13*, *5-15*
102596001 *5-9*, *5-11*, *5-13*, *5-15*
102596301 *5-11*, *5-13*, *5-15*
102617201 *8-5*, *8-7*, *10-3*
102617801 *12-17*
102621501 *1-43*
102704701 *14-3*
102704801 *14-3*
102704901 *14-3*
102732401 *8-5*, *8-7*
102771701 *15-3*
102803301 *7-15*, *7-19*
102838701 *7-9*
102838801 *7-9*
102838901 *7-9*
102839001 *7-9*
102839301 *7-9*
102841101 *7-9*
102844601 *7-9*
102844701 *7-9*
102865101 *9-9*
102865901 *13-17*
102878201 *6-13*
102886301 *15-3*
102886401 *15-3*
102886501 *15-3*
102886601 *15-3*
102915601 *1-11*
102956201 *6-11*, *6-13*
102958001 *13-13*
102967901 *1-23*
103196001 *1-37*, *1-39*, *1-43*
103196202 *8-5*
103198401 *7-21*
103199301 *1-37*, *1-43*
103200301 *1-37*, *1-39*
103205101 *1-31*, *1-33*, *1-35*
103205501 *3-5*, *7-21*
103210101 *1-31*, *1-33*, *1-35*
103286201 *1-41*
103286202 *1-41*
103286203 *1-41*
103325001 *1-5*, *4-3*, *4-5*, *4-7*, *4-9*
103327601 *1-21*
103330601 *1-5*
103347101 *7-9*
103347301 *7-9*
103347601 *7-9*
103347701 *7-9*
103347801 *7-9*
103347901 *7-9*
103357701 *13-9*, *13-11*

INDEX

103367901 *13-17*
103368301 *13-9*, *13-11*
103368401 *13-9*, *13-11*
103372101 *9-3*, *9-5*
103372401 *9-9*
103374801 *13-9*, *13-11*
103375301 *13-9*, *13-11*
103375402 *13-5*
103375702 *13-5*
103375901 *4-3*, *4-5*, *4-7*, *4-9*
103380201 *5-3*, *5-5*
103380202 *5-3*, *5-5*
103384601 *3-11*
103384701 *3-11*
103384801 *3-11*
103388501 *6-11*
103395505 *13-13*
103397901 *4-7*, *4-9*
103402701 *1-11*
103414901 *4-7*, *4-9*
103449501 *13-19*
103449601 *13-19*
103451301 *1-27*
103451401 *1-27*
103451901 *1-27*
103451902 *1-27*
103451903 *1-27*
103459104 *2-3*
103470701 *9-3*, *9-5*
103483101 *5-3*, *5-5*
103483102 *5-3*, *5-5*
103483201 *5-3*, *5-5*
103483401 *5-3*, *5-5*
103483601 *5-3*, *5-5*
103483701 *5-3*, *5-5*
103496801 *7-15*
103508101 *8-7*
103510602 *13-13*
103528701 *5-7*
103528702 *5-7*
103535001 *5-7*
103572501 *14-3*
103597101 *4-7*, *4-9*
103624601 *1-49*, *1-51*, *1-53*
103624602 *1-49*, *1-51*, *1-53*
103635201 *1-13*
103638601 *6-13*
103638701 *6-13*
103638702 *6-13*
103638801 *6-13*
103638901 *1-3*
103647402 *13-9*, *13-11*
103647403 *13-9*, *13-11*
103653001 *1-45*, *1-49*, *1-51*, *1-53*
103653201 *1-43*
103662801 *1-25*
103679701 *6-9*
103694501 *2-3*
103699401 *1-21*
103700302 *4-3*, *4-7*, *4-17*
103711001 *6-13*
103724501 *6-5*
103724503 *6-3*
103724601 *6-3*, *6-5*
103724901 *6-3*, *6-5*
103725601 *1-39*
103725701 *1-43*
103742303 *1-49*, *1-51*, *1-53*
103742304 *6-17*
103742305 *6-15*
103742306 *6-19*
103750001 *1-37*, *1-39*, *1-43*
103750101 *1-37*, *1-39*, *1-43*
103756401 *9-9*
103765601 *13-9*, *13-11*
103774701 *13-13*
103774801 *1-39*
103775201 *1-39*
103775601 *1-39*
103777601 *5-9*, *5-11*, *5-13*, *5-15*, *7-3*
103783001 *3-9*, *6-3*, *6-5*
103783002 *3-3*, *6-3*, *6-5*
103783003 *6-3*
103794501 *9-9*
103795001 *9-17*
103796701 *6-3*
103802402 *4-5*, *4-9*, *4-19*
103810201 *6-7*
103812901 *1-23*
103813001 *1-23*
103816401 *1-43*
103816402 *1-43*
103816601 *1-7*
103826201 *6-9*
103826301 *6-9*
103832401 *2-5*
103832901 *1-19*
103833601 *1-19*
103833701 *1-19*
103833801 *1-19*
103833901 *1-19*
103853121 *1-21*, *1-45*, *1-49*
103853122 *1-21*, *1-45*, *1-51*
103853124 *1-21*, *1-45*, *1-53*
103853125 *1-21*, *1-45*
103866801 *1-45*
103866802 *1-45*
103866901 *1-45*, *1-49*, *1-51*, *1-53*
103866902 *1-45*, *1-49*, *1-51*, *1-53*
103872701 *16-13*
103874111 *5-15*
103879701 *12-11*
103881201 *1-39*
103882801 *8-5*, *8-7*
103886601 *12-5*
103886801 *1-29*
103896601 *9-9*
103905201 *9-3*, *9-5*
103921601 *6-15*, *6-17*
103921602 *6-15*, *6-17*
103922401 *1-47*, *1-49*, *1-51*, *1-53*
103923601 *4-3*, *4-5*, *4-7*, *4-9*
103924301 *4-15*
103924401 *4-15*
103924801 *7-5*, *7-7*, *13-5*
103926601 *1-3*
103929301 *1-21*
103929302 *1-21*
103933902 *4-3*, *4-5*, *4-7*, *4-9*
103934901 *2-5*
103935001 *2-5*
103943401 *5-15*, *13-3*
103944301 *9-3*, *9-5*
103951001 *2-3*
103951002 *2-3*
103951007 *2-3*
103951501 *12-17*
103952901 *1-21*
103953301 *7-9*
103964901 *6-15*, *6-17*, *6-19*
103965001 *6-15*, *6-17*, *6-19*
103973901 *11-5*
103974002 *11-7*
103974201 *11-5*
103974401 *11-5*
103974815 *5-9*
103974821 *5-11*, *5-13*
103974901 *5-9*, *5-11*, *5-13*, *5-15*
103975011 *5-15*
103975301 *11-7*
103975901 *1-3*
103976101 *11-5*
103978001 *9-15*
103978801 *1-21*
103979301 *12-17*
103979401 *8-5*, *8-7*
103982001 *9-15*
103982002 *9-15*
103982201 *8-5*, *8-7*
103982301 *13-17*
103983501 *9-13*
103984601 *11-5*
103989501 *12-17*
103990501 *1-3*
103990601 *1-3*
103991501 *4-11*
103994101 *1-25*
103995001 *12-17*

INDEX

103995901 *8-9*
103996201 *8-5*
104005301 *7-11*, *7-13*
104005901 *13-15*
104006101 *13-15*
104008001 *1-31*
104008002 *1-33*
104008003 *1-35*
104008501 *1-37*
104008502 *1-39*
104008901 *1-37*
104008902 *1-39*
104021701 *12-17*
104023201 *13-5*
104023421 *1-19*
104023422 *1-19*
104023424 *1-19*
104023425 *1-19*
104023501 *9-15*, *12-9*
104024001 *13-5*
104024201 *16-3*, *16-11*
104024202 *16-11*
104024401 *16-11*
104024402 *16-11*
104024501 *16-3*, *16-5*, *16-7*, *16-9*, *16-13*, *16-15*
104024601 *16-3*, *16-5*, *16-7*, *16-9*, *16-13*, *16-15*
104025101 *11-7*
104027101 *12-17*
104028501 *16-11*
104028502 *16-11*
104028601 *16-11*
104028602 *16-11*
104028901 *16-3*, *16-5*, *16-7*, *16-9*
104029001 *16-3*, *16-5*, *16-7*, *16-9*
104029301 *16-13*, *16-15*
104029601 *16-3*, *16-5*
104029602 *16-7*
104029603 *16-9*
105003601 *16-3*, *16-5*, *16-7*, *16-9*
105003701 *16-3*, *16-5*, *16-7*, *16-9*
105005001 *13-17*
105005402 *1-15*
105007501 *7-5*
105008101 *7-5*, *7-7*
105008301 *7-5*, *7-7*
105009001 *9-17*
105009201 *9-17*
105010001 *8-21*
105010101 *8-17*
105010201 *8-17*
105010301 *8-17*
105010401 *8-21*
105010501 *8-21*
105010601 *8-21*
105010701 *8-21*
105010801 *8-17*
105010901 *8-17*, *9-13*
105011001 *8-21*
105011101 *8-21*
105011201 *8-21*
105011301 *8-21*
105011401 *8-21*
105011501 *8-21*
105011601 *8-21*
105011701 *8-21*
105011801 *8-21*
105011901 *8-17*
105012001 *8-17*
105012101 *8-17*
105012201 *8-17*
105012301 *8-17*
105012401 *8-17*
105012501 *8-21*
105012601 *8-9*, *8-15*, *8-17*
105012701 *8-23*
105012801 *8-23*
105012901 *8-23*
105013001 *8-23*
105013101 *8-23*
105013201 *8-23*
105013301 *8-23*
105013401 *8-23*
105013501 *8-23*
105013601 *8-23*
105013701 *8-23*
105013801 *8-23*
105013901 *8-23*
105014001 *8-23*
105014101 *8-23*
105014201 *8-19*
105014301 *8-19*
105014401 *8-19*
105014501 *8-19*
105014601 *8-19*
105014701 *8-19*
105014801 *8-19*
105014901 *8-19*
105015001 *8-19*
105015101 *8-19*
105015201 *8-19*
105015301 *8-19*
105015401 *8-19*
105015501 *8-19*
105015601 *8-19*
105015701 *8-19*
105015801 *8-19*
105015901 *8-19*
105016001 *8-13*, *8-19*
105016101 *9-13*
105016201 *9-13*
105016301 *9-13*
105016401 *9-13*
105016501 *9-13*
105016701 *8-9*
105016801 *8-9*
105016901 *8-9*
105017001 *8-9*
105017101 *8-9*
105017201 *9-11*
105017301 *8-13*
105017401 *8-13*
105017501 *8-13*
105017601 *8-13*
105017701 *8-13*
105017801 *8-3*, *8-13*
105017901 *8-13*
105018001 *8-15*
105018101 *8-15*
105018201 *8-15*
105018301 *8-15*
105018401 *8-15*
105018501 *8-17*
105025001 *12-11*
105025101 *12-11*
105025201 *12-11*
105025301 *12-11*
105025401 *12-11*
105025501 *12-11*
105025601 *12-11*
105025701 *12-11*
105025801 *12-11*
105025901 *12-11*
105026001 *12-11*
105026101 *12-11*
105026201 *12-11*
105026301 *12-11*
105026401 *12-11*
105026501 *12-11*
105026601 *12-11*
105026701 *12-11*
105026801 *12-11*
105026901 *12-11*
105027001 *12-11*
105027101 *12-11*
105027201 *12-11*
105027301 *12-11*
105027401 *12-13*
105027501 *12-13*
105027601 *12-13*
105027701 *12-13*
105027801 *12-13*
105027901 *12-13*
105028001 *12-13*
105028101 *12-15*
105028201 *12-13*
105028301 *12-11*
105028401 *12-13*
105028501 *12-11*

INDEX

105028601 *12-13*
105028701 *12-13*
105028801 *12-13*
105028901 *12-13*
105029001 *12-13*
105029101 *12-13*
105029201 *12-13*
105029301 *12-15*
105029401 *12-15*
105029501 *12-15*
105029601 *12-15*
105029701 *12-15*
105029801 *12-15*
105029901 *12-15*
105030001 *12-11*
105030301 *12-15*
105030401 *12-15*
105030501 *12-15*
105030601 *12-15*
105030701 *12-11*
105030801 *12-15*
105030901 *12-13*
105031001 *12-15*
105037101 *4-15*
105037501 *12-3*
105037601 *12-3*
105037701 *12-3*
105038501 *12-3*
105038801 *12-5*
105039801 *12-3*
105040401 *12-3*
105040901 *12-7*
105041101 *12-3*
105043401 *9-7*
105043601 *9-3*, *9-5*
105043801 *9-7*
105043901 *9-7*
105049001 *6-7*
105066001 *12-15*
105066101 *12-15*
105067501 *3-5*
105068201 *16-11*
105068202 *16-11*
105068301 *16-11*
105068302 *16-11*
105068401 *16-11*
105068402 *16-11*
105068601 *6-7*
105070101 *16-3*, *16-5*, *16-11*
105070102 *16-7*, *16-11*
105070103 *16-9*, *16-11*
105070501 *3-7*
105072201 *9-3*, *9-5*
105073001 *9-7*
105074101 *12-3*
105075301 *8-11*
105076201 *10-3*
105081501 *7-5*, *7-7*
105081601 *7-5*, *7-7*
105082601 *16-15*
105082801 *16-15*
105083001 *16-13*, *16-15*
105084301 *16-15*
105084401 *16-13*, *16-15*
105084501 *16-15*
105084801 *8-11*
105086801 *16-13*, *16-15*
105086901 *16-15*
105092301 *16-3*, *16-5*, *16-7*, *16-9*, *16-13*, *16-15*
105093101 *16-3*, *16-5*, *16-7*, *16-9*
105094101 *16-13*, *16-15*
105095201 *16-3*
105096101 *11-5*
105101001 *16-15*
105101221 *1-45*, *1-49*
105101222 *1-45*, *1-51*
105101224 *1-45*, *1-53*
105101225 *1-45*
105102601 *7-23*
105116301 *5-15*, *13-3*
105123801 *16-3*, *16-5*, *16-7*, *16-9*, *16-13*, *16-15*
105134601 *8-5*, *8-7*
105135101 *9-15*, *12-7*
105136501 *7-21*
105137401 *13-5*
105138301 *13-9*, *13-11*
105142401 *2-3*
105142501 *4-7*
105142502 *4-9*
105142601 *4-3*
105142602 *4-5*
105143301 *7-5*, *7-7*, *9-3*, *9-5*
105144401 *9-15*, *12-9*
105149301 *8-5*, *8-7*
105152301 *4-11*
105161701 *7-5*, *7-7*, *7-9*
105166801 *13-15*
105166901 *13-15*
105167001 *13-15*
105167101 *13-15*
105168501 *13-15*
105168601 *13-15*
105188185 *6-15*, *6-17*, *6-19*
105190101 *7-9*
105205401 *7-11*
105209601 *17-5*
105215501 *9-5*
105215502 *9-3*
105223321 *1-19*
105223322 *1-19*
105223323 *1-19*
105223421 *1-21*
105223422 *1-21*
105223423 *1-21*
105228801 *7-5*, *7-7*
105234501 *17-5*
105234502 *17-5*
105234801 *12-11*, *12-13*
105234901 *12-11*, *12-13*
105236701 *7-7*
105237399 *7-19*
105245801 *11-3*
105255501 *7-7*
105255601 *7-7*
105262401 *8-7*
105266401 *7-17*
105282901 *9-7*
105282902 *9-7*
105282903 *9-7*
105291501 *1-13*
105299001 *16-13*
105299101 *16-13*
105299601 *16-13*
105300801 *16-13*
105314001 *1-13*
105314101 *1-13*
105315201 *16-13*
4 pass conversion kit, beige *1-49*
4 pass conversion kit, gray *1-53*
4 pass conversion kit, white *1-51*
47539338001 *7-13*
47539957001 *10-3*
47542195001 *5-3*, *5-5*
47546044001 *9-3*, *9-5*
96741046 *8-5*, *8-7*

A

A-arm, three-piece *6-11*
absorber, front shock *6-11*
absorber, rear shock *6-15*, *6-17*, *6-19*
AC cord *16-3*, *16-11*
accelerator cable *9-15*
accelerator pedal *5-9*, *5-11*, *5-13*, *5-15*, *7-3*
accelerator pedal adjustment tool *17-3*
access panel *1-23*
adapter
  air intake *9-13*
  battery terminal *7-17*
  cable (IQDM) *17-5*
adhesive, guide ring *17-3*
air cleaner assembly *9-17*
air deflector *8-11*
air filter *8-3*, *9-17*
air filter canister evacuation valve *9-17*
air intake adapter *9-13*
air intake cover *9-17*
air intake hose *9-17*
AM1285701 *17-5*

INDEX

arbor *17-3*
arm
  governor *9-15*, *12-9*
armature *14-3*
armrest *1-19*
assembly
  brake lever *5-3*, *5-5*
  drive hub *11-5*
  driven clutch *11-7*
  frame and field (motor) *14-3*
  fuel cap *9-3*, *9-5*
  fuel pump *9-7*
  moveable-face *11-5*, *11-7*
  secondary clutch weight *11-5*
axle *15-3*
axle shaft *12-15*
axle shaft oil seal *15-3*
axle tube *12-15*, *15-3*

B

backing plate, brake *5-3*, *5-5*
backrest, beige *1-21*, *1-45*, *1-49*
backrest, black *1-21*, *1-45*
backrest, gray *1-21*, *1-45*, *1-53*
backrest, white *1-21*, *1-45*, *1-51*
baffle
  crankcase *8-9*
bag hoop *1-21*
bag strap *1-21*
bag strap buckle *1-21*
balance shaft *8-23*
ball bearing *7-9*, *12-13*, *12-15*
ball joint, inner *6-9*
barrel, plastic *1-21*, *1-45*, *1-47*, *1-49*, *1-51*, *1-53*, *5-9*, *5-11*, *5-13*, *5-15*, *13-11*
battery
  12-volt, side-post *7-15*
  8-volt, GC8 Type E *13-9*, *13-11*
battery bucket *13-9*, *13-11*
battery charger *16-3*, *16-5*, *16-7*, *16-9*, *16-13*, *16-15*
battery charger wire harness
  onboard *16-15*
battery clamp *7-15*, *7-19*
battery cross rod tube *13-9*, *13-11*
battery discharge machine *17-3*
battery hold-down *13-9*, *13-11*
battery terminal protector spray *17-3*
battery thermometer *17-3*
battery, 12-volt, top-post *7-19*
bead, ferrite *13-19*
bearing *15-3*
  balance shaft *8-21*
  ball *7-9*, *12-13*, *12-15*
  ball (motor) *14-3*
  crankshaft *8-21*
  inner axle tube *15-3*
  thrust *12-11*
bearing and oil seal remover *17-3*
bearing driver set *17-3*
bearing puller *17-3*
bearing puller wedge *17-3*
beauty panel, front *1-7*
beauty panel, rear *1-23*
bellows, steering *6-9*
belt, drive *11-3*
belt, starter/generator *7-11*, *7-13*
body kick plate (ele) *1-17*
body kick plate (gas) *1-15*
body, rear *1-23*
body, under *1-23*
bolt
  battery, "S" hold-down *13-9*, *13-11*
bolt, U- *1-49*, *1-51*, *1-53*
boot, switch *7-21*, *13-7*
bottle, sand *1-27*
bracket
  accel.cable *9-15*, *12-7*
  canopy support *1-37*, *1-39*
  carbon canister *9-9*
  clamshell *1-13*
  equalizer *5-7*
  FNR cable *9-15*, *12-7*
  governor *9-15*, *12-9*
  jounce bumper *1-49*, *1-51*, *1-53*, *6-19*
  mounting, starter/generator *8-5*, *8-7*
  mounting, transaxle/exhaust *8-5*, *8-7*
  seat support *1-45*
  shock mounting, drv *6-15*, *6-17*, *6-19*
  shock mounting, pas *6-15*, *6-17*, *6-19*
  snubber *8-5*, *8-7*
  starter/generator adjusting *7-11*, *7-13*
brake adjusting mechanism *5-3*, *5-5*
brake backing plate *5-3*, *5-5*
brake cable *5-7*
brake cluster *5-3*, *5-5*
brake drum *5-3*, *5-5*
brake lever *5-3*, *5-5*
brake pedal *5-9*, *5-11*, *5-13*, *5-15*
brake rod *5-9*, *5-11*, *5-13*, *5-15*
brake self-adjusting mechanism *5-3*, *5-5*
brake shoe *5-3*, *5-5*
brake spring *5-3*, *5-5*
breather *12-11*, *15-3*
breather hose *9-13*
brow *1-7*
brow cap *1-7*
brush *14-3*
brush box assembly *14-3*
brush cover kit, starter/generator *7-9*
brush inspection port cover *7-9*
brush rigging *14-3*
brush spring *7-9*, *14-3*
brush spring set *7-9*
brush spring, starter/generator *7-9*
brush terminal, starter/generator *7-9*
bucket, battery *13-9*, *13-11*
bucket, gas vehicle *9-3*, *9-5*
bucket, sand *1-29*
buckle, bag strap *1-21*
bulb, headlight *4-3*, *4-5*, *4-7*, *4-9*
bulb, turn signal *4-3*, *4-5*, *4-7*, *4-9*
Bumper *1-5*
bumper *1-5*
  drive unit (motor) *14-3*
  jounce *1-49*, *1-51*, *1-53*, *6-19*
  rubber *1-25*
Bumper, Shock Plug *1-5*, *4-3*, *4-5*, *4-7*, *4-9*
bushing *6-11*, *6-13*, *11-5*, *12-3*
  urethane *6-15*, *6-17*, *6-19*
button, drive *11-7*
buzzer, reverse *4-11*, *4-13*, *4-15*

C

cable
  accelerator *9-15*
  brake *5-7*
  FNR shifter *12-5*
  governor *9-15*
calibration test module *17-3*
cam
  driven clutch *11-7*
cam, engine *8-19*
cam, neutral lockout *12-3*
camshaft *8-19*
camshaft o-ring *8-19*
canister, carbon, fuel tank *9-9*
canopy *1-31*, *1-33*
canopy drain cover *1-31*, *1-33*, *1-35*
canopy handle *1-31*, *1-33*
canopy strut, front, lh *1-37*, *1-39*, *1-43*
canopy strut, front, rh *1-37*, *1-39*, *1-43*
canopy support *1-37*, *1-39*
canopy support bracket, drv *1-21*
canopy support bracket, pas *1-21*
canopy support cover, drv *1-9*, *1-37*, *1-39*, *1-43*
canopy support cover, pas *1-9*, *1-37*, *1-39*, *1-43*
cap
  dust *4-11*
  front hub *6-13*
  fuel, gas, ratchet *9-3*, *9-5*
  key switch *4-11*, *4-13*, *4-15*
  rubber *12-17*
cap, hub, 7 prong *2-3*
cap, SAM *1-9*
carbon canister *9-9*
card, safety first *17-5*
case

INDEX

gear *15-3*
transaxle *12-11*
CE mark battery bucket plug kit *13-11*
CE mark decal *13-11*
CE mark ferrite bead, Fair-rite *13-19*
CE mark ferrite bead, TDK *13-19*
center shaft *12-13*
chain, timing *8-19*
charger bezel tool *17-3*
charger receptacle *13-5*
charger, battery, Hi-Freq *16-3*, *16-5*, *16-7*, *16-9*, *16-13*, *16-15*
clamp
battery *7-15*, *7-19*
hose *9-3*, *9-5*, *9-9*, *9-17*
leaf spring *6-13*
p- (fuel filter) *8-11*, *9-15*
clamshell bracket *1-13*
clip
body trim *1-13*, *1-23*
retainer plate *8-17*
clip, piston pin *8-23*
clip, score card *6-3*, *6-5*
cluster, brake *5-3*, *5-5*
clutch
pin *12-13*
clutch cam installation tool *17-3*
clutch repair kit *11-7*
clutch tool kit *17-3*
clutch weight *11-5*
clutch, drive *11-5*
clutch, driven *11-7*
coil, ignition *8-13*
collar *12-13*
collet *8-19*
comfort grip steering wheel *6-3*
comfort grip steering wheel kit *6-3*
component mounting plate *13-17*
compression gauge *17-5*
compressor, piston ring *17-5*
compressor, valve spring *17-7*
connecting rod *8-23*
connector, 9-pin *4-13*
continuity tester *17-5*
controller diagnostic tool (CDT) *17-5*
controller diagnostic tool (CDT) cable *17-5*
controller shield *13-17*
controller, motor speed
Excel w/Hi-Freq *13-17*
conversion kit,4 pass, beige *1-49*
conversion kit,4 pass, gray *1-53*
conversion kit,4 pass, white *1-51*
cooling fan *8-9*
cord reel *16-13*, *16-15*
cord set, DC *16-3*, *16-5*, *16-7*, *16-9*, *16-11*
cord, AC *16-3*, *16-11*
cord, DC *16-13*, *16-15*
counter shaft *12-13*
cover
air intake *9-17*
brush inspection port *7-9*
canopy drain *1-31*, *1-33*, *1-35*
crankcase *8-21*
DC terminal block *16-3*, *16-5*, *16-7*, *16-9*, *16-13*, *16-15*
dust *5-3*, *5-5*
fan *8-9*
support, canopy, drv *1-9*, *1-37*, *1-39*, *1-43*
support, canopy, pas *1-9*, *1-37*, *1-39*, *1-43*
USB *16-3*, *16-5*, *16-7*, *16-9*, *16-13*, *16-15*
cover plate *14-3*
cover, rocker *8-17*
cover, steering column *4-3*, *4-5*, *4-7*, *4-9*
cover, valve *8-17*
crankcase *8-21*
crankcase baffle *8-9*
crankcase cover *8-21*
crankshaft *8-23*
crossmember, rear *1-3*
cushion, shock absorber *6-15*, *6-17*, *6-19*
cylinder head *8-17*

D

dash *1-11*
dash support assembly *1-3*, *6-11*
DC cord *16-13*, *16-15*
DC cord set *16-3*, *16-5*, *16-7*, *16-9*, *16-11*
decal *3-7*
CE mark *13-11*
engine warning *8-9*
filter log *13-15*
four-passenger warning *1-49*, *1-51*, *1-53*, *3-13*
frame ground warning *3-5*
inspect log *13-15*
on/off *3-3*, *3-9*
operating instructions *3-3*, *3-9*, *6-3*, *6-5*
private speed mode *3-3*, *3-9*
rollover warning *3-3*, *3-9*
rotating parts *3-5*
run/service switch *3-5*, *7-21*
Run/Tow warning *3-11*
warning *3-11*
warning, Run/Tow *3-11*
water exposure *3-11*
deflector
air *8-11*
deionizer *13-15*
cartridge *13-15*
differential *12-15*
open *12-15*
differential drive unit *15-3*
differential gear *15-3*
differential gear set *12-15*
differential housing *15-3*
differential shaft *12-15*
diode *7-5*, *7-7*
dipstick *8-21*
drain channel *1-11*
drain plug *1-25*, *8-21*, *12-11*
drain plug gasket *8-21*
drain plug, rubber *7-9*
drive belt *11-3*
drive button *11-7*
drive clutch *11-5*
drive clutch button *11-5*
drive clutch holder tool *17-3*
drive clutch hub puller *17-3*
drive clutch puller *17-3*
drive clutch spring *11-5*
drive clutch weight *11-5*
drive hub *11-5*
drive unit bumper *14-3*
driven clutch *11-7*
driven clutch button *11-7*
driven clutch cam *11-7*
driven clutch cam puller *17-3*
driven clutch puller plug *17-3*
driver, drive clutch *11-5*
drum, brake *5-3*, *5-5*
dry moly lubricant *17-5*
dust cap *4-11*
dust cover *5-3*, *5-5*
dust seal *6-9*

E

eccentric adjustment screw *6-13*
ECU *9-11*
end cap, motor *14-3*
end, tie rod *6-9*
engine
air cleaner *9-17*
air deflector *8-11*
air filter *8-3*, *9-17*
air intake hose *9-17*
balance shaft *8-23*
bearing, balance shaft *8-21*
bearing, crankshaft *8-21*
breather hose *9-13*
cam *8-19*
camshaft *8-19*
camshaft O-ring *8-19*
connecting rod *8-23*
crankcase *8-21*
crankcase baffle *8-9*
crankcase cover *8-21*
crankcase plug *8-21*
crankshaft *8-23*

INDEX

crankshaft key *8-23*
cylinder head *8-17*
dipstick *8-21*
drain plug gasket *8-21*
ECU *9-11*
exhaust valve *8-19*
fan *8-9*
fan housing *8-9*
flywheel *8-13*
fuel injector *9-11*
guide pin *8-21*
head gasket *8-17*
ignition coil *8-13*
insulator, throttle body *9-13*
intake valve *8-19*
oil drain plug *8-21*
oil filler tube *8-21*
oil filler tube O-ring *8-21*
oil level sensor *8-15*
oil seal *8-21*
piston *8-23*
piston pin *8-23*
piston pin clip *8-23*
piston ring set *8-23*
retainer plate *8-17*
retainer plate clip *8-17*
rocker arm *8-19*
rocker cover *8-17*
rocker cover gasket *8-17*
rocker shaft *8-19*
spark plug *8-3*, *8-13*
temperature sensor *8-15*
throttle body *9-11*
timing chain *8-19*
timing chain guide *8-19*
timing chain sprocket *8-19*
timing chain tensioner *8-19*
valve collet *8-19*
valve guide *8-17*
valve seal *8-17*
valve spring *8-19*
valve spring retainer *8-19*
warning decal *8-9*
engine warning decal *8-9*
engine, EX40 *8-5*, *8-7*
equalizer *5-7*
exhaust system *10-3*
exhaust valve *8-19*

F

face, moveable *11-7*
fan
cooling *8-9*
fan cover *8-9*
fan housing *8-9*
fascia *1-7*
ferrite bead (CE), Fair-rite *13-19*
ferrite bead (CE), TDK *13-19*
field coil housing *7-9*
filter
air *8-3*, *9-17*
fuel *9-7*
floor cover plate *5-9*, *5-11*, *5-13*, *5-15*
floormat *1-13*
floormat, 4 pass, rear *1-47*, *1-49*, *1-51*, *1-53*
flywheel *8-13*
FNR handle *12-3*
FNR housing *13-7*
FNR shift lever *12-7*
FNR shifter base *12-3*
FNR shifter cable *12-5*
foot deck *1-47*, *1-49*, *1-51*, *1-53*
frame and field assembly (motor) *14-3*
frame and field, starter/generator *7-9*
front body beauty panel *1-7*
front leaf spring *6-13*
front suspension structure *6-11*
fuel filter *9-7*
Fuel Filter Kit *9-7*
fuel injector *9-11*
fuel line *9-9*
Fuel Module, Hold-Down Ring *9-7*
Fuel Pump *9-7*
fuel pump *9-7*
fuel tank *9-3*, *9-5*
fuse
10-amp *7-5*, *7-7*
15-amp *13-5*, *13-7*
2-amp *7-5*, *7-7*, *13-5*
30-amp *13-5*, *16-15*
5-amp *7-5*, *7-7*

G

gas pedal assembly, anodized *5-11*, *5-13*
gas pedal assembly, anodized triac *5-9*
gasket *12-11*
air intake *9-17*
cover, rocker *8-17*
cover, valve *8-17*
drain plug *8-21*
insulator *9-13*
liquid *15-3*, *17-5*
plug *15-3*
seat *1-19*
gasket, head *8-17*
gauge, compression *17-5*
gear
17 tooth *12-13*
34 tooth *12-13*
52 tooth *12-13*
60 tooth *12-15*
62 tooth *12-13*
differential *15-3*
differential idler *15-3*
differential output *15-3*
governor *12-11*
governor, 34 tooth *12-13*
set, differential *12-15*
gear yoke *17-5*
gearcase *15-3*
governor arm *9-15*, *12-9*
governor cable *9-15*
governor gear shaft *12-11*
governor shaft *12-11*
grip, pencil *6-3*, *6-5*
grommet *9-3*, *9-5*
guide
valve *8-17*
guide pin *8-21*, *12-11*
guide ring adhesive *17-3*
guide, timing chain *8-19*

H

hand rail *1-47*, *1-49*, *1-51*, *1-53*
handle, canopy *1-33*
handle, FNR *12-3*
harness, instrument panel *4-3*, *4-5*, *4-7*, *4-9*, *4-11*, *4-13*, *7-5*, *7-7*
harness, main *7-5*, *7-7*
harness, wire *4-3*, *4-5*, *4-7*, *4-9*, *13-5*
harness, wire, gas engine-ECU *7-5*, *7-7*
harness, wire, gas IP *4-13*, *7-5*, *7-7*
harness, wire, onboard battery charger *16-15*
head gasket *8-17*
head, cylinder *8-17*
headlamp *4-3*, *4-5*, *4-7*, *4-9*
headlight bulb *4-3*, *4-5*, *4-7*, *4-9*
hinge *13-9*, *13-11*
seat bottom *1-19*
hinge, seat bottom *1-19*
hip restraint *1-19*
hip restraint, 4 pass *1-45*, *1-49*, *1-51*, *1-53*
hold-down, battery *13-9*, *13-11*
hoop, bag *1-21*
horn *4-3*, *4-5*, *4-7*, *4-9*
hose
air intake *9-17*
engine breather *9-13*
fuel *9-9*
fuel vent *9-9*
SPWS *13-13*
vent *9-9*
housing
3-pin *14-3*
differential *15-3*
fan *8-9*
field coil *7-9*
hub *6-13*, *12-17*

INDEX

hub cap *2-3*, *6-13*
hub cap, 7 prong *2-3*
hydrometer *17-5*

I

idler gear, differential *15-3*
ignition coil *8-13*
indicator, charger *4-11*
inner ball joint *6-9*
inner frame snubber *8-5*, *8-7*
input shaft *12-13*, *15-3*
instrument panel *4-11*, *4-13*, *4-15*
instrument panel harness *4-3*, *4-5*, *4-7*, *4-9*, *4-11*, *4-13*, *7-5*, *7-7*
insulator *9-13*
insulator gasket *9-13*
intake cover *9-17*
intake valve *8-19*
intermediate shaft *15-3*
internal retaining ring pliers *17-5*

J

J-clip *1-3*, *1-47*, *6-15*, *6-17*, *6-19*
jounce bumper *1-49*, *1-51*, *1-53*, *6-19*
jounce bumper bracket *1-49*, *1-51*, *1-53*, *6-19*

K

key
- driven clutch *11-7*
- On/Off *4-11*, *4-13*, *4-15*
- square *11-7*

key switch *4-11*, *4-13*, *4-15*
key switch cap *4-11*, *4-13*, *4-15*
key,crankshaft *8-23*
kick plate (ele) *1-17*
kick plate (gas) *1-15*
king pin *6-13*
kit
- 3-pin housing *14-3*
- 4 pass conversion, beige *1-49*
- 4 pass conversion, gray *1-53*
- 4 pass conversion, white *1-51*
- ball joint, inner *6-9*
- battery terminal adapter *7-17*
- bellows, steering, sona *6-9*
- brake cable *5-7*
- brake shoe retainer *5-3*, *5-5*
- CE battery bucket plug *13-11*
- clutch repair *11-7*
- comfort grip steering wheel *6-3*
- controller diagnostic tool (CDT) *17-5*
- deflector, air *8-11*
- drive clutch button *11-5*
- drive clutch weight *11-5*
- driven clutch button *11-7*
- front hub replacement *6-13*
- hand pump, SPWS *13-15*
- hub cap *2-3*
- motor brush *14-3*
- motor brush spring *14-3*
- motor cover plate *14-3*
- motor speed sensor *14-3*
- motor terminal hardware *14-3*
- relay, 48V *4-7*, *4-9*
- SAM assembly *1-21*
- seat bottom *1-19*
- shock absorber *6-15*, *6-17*, *6-19*
- shock absorber cushion *6-15*, *6-17*, *6-19*
- shoe retainer *5-3*, *5-5*
- underbody cover *1-9*

knob, light switch *4-3*, *4-5*, *4-7*, *4-9*, *4-15*

L

leaf spring, front *6-13*
leaf spring, rear *6-15*, *6-17*
leaf spring, rear, 4-pass *1-49*, *1-51*, *1-53*, *6-19*
lever
- transaxle shift *12-7*

light
- oil *4-13*, *4-15*
- tail *4-7*, *4-9*
- water quality *13-15*

light switch *4-3*, *4-5*, *4-7*, *4-9*, *4-15*
light switch knob *4-3*, *4-5*, *4-7*, *4-9*, *4-15*
limit switch *7-23*, *12-3*
line, fuel *9-9*
liquid gasket *15-3*, *17-5*
low oil warning light *4-13*, *4-15*
lubricant, dry moly *17-5*
lubricant, moly-teflon *14-3*, *17-5*
lug nut *2-3*, *2-5*
lug stud *6-13*, *12-17*, *15-3*

M

magnet, speed sensor *14-3*
main harness *7-5*, *7-7*
mat, floor *1-13*
MCOR *5-15*, *13-3*
mechanism, brake adjusting *5-3*, *5-5*
meter, volt ohm *17-7*
module
- calibration test *17-3*

moly-teflon lubricant *17-5*
motor
- 48-volt IQ *14-3*

motor brush kit *14-3*
motor brush spring kit *14-3*
motor bumper *14-3*
motor end cap *14-3*
motor magnet, speed sensor *14-3*
motor speed controller
- Excel w/Hi-Freq *13-17*

motor speed sensor *14-3*
motor speed sensor kit *14-3*
motor terminal hardware kit *14-3*
motor wire harness *13-5*
mounting plate, component *13-17*
moveable-face *11-5*, *11-7*

N

nameplate *1-7*
neutral lockout cam *12-3*
nut, lug *2-3*, *2-5*

O

oil filler tube *8-21*
oil level sensor *8-15*
oil seal *8-21*, *12-11*
oil warning light, low *4-13*, *4-15*
O-ring *8-19*, *8-21*
O-ring Kit, Fuel Module *9-7*
O-Ring, Fuel Module *9-7*

P

paint, underbody (black) *17-5*
panel
- access *1-23*
- front body beauty *1-7*
- rear body beauty *1-23*
- SAM *1-21*

park brake release, anod *5-9*, *5-11*, *5-13*, *5-15*, *7-3*
p-clamp (fuel filter) *8-11*, *9-15*
pedal assembly, gas, anodized *5-11*, *5-13*
pedal assembly, gas, anodized triac *5-9*
pedal, accelerator *5-9*, *5-11*, *5-13*, *5-15*, *7-3*
pedal, brake *5-9*, *5-11*, *5-13*, *5-15*
pencil grip *6-3*, *6-5*
pin
- bow tie locking *5-7*
- clevis *5-7*
- differential *12-15*
- guide *8-21*, *12-11*
- input shaft *12-13*
- king *6-13*
- piston *8-23*

piston *8-23*
piston pin *8-23*
piston pin clip *8-23*
piston ring *8-23*
piston ring compressor *17-5*
piston ring pliers *17-5*
piston ring set *8-23*
plate
- backing (brake) *5-3*, *5-5*

INDEX

component mounting *13-17*
cover *14-3*
floor cover *5-9*, *5-11*, *5-13*, *5-15*
kick(ele) *1-17*
kick(gas) *1-15*
mounting, CVT, center *8-5*, *8-7*
mounting, engine/axle *8-5*, *8-7*
retainer *8-17*
pliers
internal retaining ring *17-5*
piston ring *17-5*
retaining ring *17-5*
plug
drain *12-11*
driven clutch puller *17-3*
oil drain *8-21*
rubber drain *7-9*
rubber, crankcase *8-21*
spark *8-3*, *8-13*
plug, drain *1-25*
press weldment *17-3*
protector spray, battery terminal *17-3*
puller
bearing *17-3*
drive clutch *17-3*
drive clutch hub *17-3*
driven clutch cam *17-3*
seal *17-5*
pulley
starter-generator *7-9*
v-belt *7-9*
pump
fuel *9-7*

R

rack and pinion *6-9*
rear body beauty panel *1-23*
rear crossmember *1-3*
rear underbody support *1-21*
receptacle *13-5*
reel cord *16-13*, *16-15*
refractometer *17-5*
regulator, voltage *7-15*, *7-19*
relay *4-7*, *4-9*
relay, 12-volt *4-15*
relay, 48V *4-7*, *4-9*
release, anod park brake *5-9*, *5-11*, *5-13*, *5-15*, *7-3*
remover, bearing and oil seal *17-3*
resistor assembly *13-17*
restraint, hip, 4 pass *1-45*, *1-49*, *1-51*, *1-53*
retainer
brake shoe *5-3*, *5-5*
shock absorber cushion *6-15*, *6-17*, *6-19*
valve spring *8-19*
retainer plate *8-17*
retaining ring pliers *17-5*
reverse buzzer *4-11*, *4-13*, *4-15*
rim (wheel) *2-3*, *2-5*
ring
piston *8-23*
retaining *11-5*, *11-7*, *12-3*, *12-11*, *12-17*
spiral backup *11-5*
Rivet, Removable *1-23*
rocker arm *8-19*
rocker cover *8-17*
rocker cover gasket *8-17*
rocker shaft *8-19*
rocker switch *13-7*
rod
brake *5-9*, *5-11*, *5-13*, *5-15*
connecting *8-23*
rubber bumper *1-25*

S

safety first card *17-5*
SAM (structural accessory module) *1-21*
SAM assembly kit *1-21*
SAM cap *1-9*
SAM panel *1-21*
sand bottle *1-27*
sand bucket *1-29*
sand scoop *1-29*
scoop, sand *1-29*
score card clip *6-3*, *6-5*
score card plate *6-3*, *6-5*
screw, eccentric adjustment *6-13*
seal
dust *6-9*
lip *15-3*
oil *8-21*, *12-11*, *15-3*
valve *8-17*
seal puller *17-5*
sealant *15-3*
seat back, beige *1-21*, *1-45*, *1-49*
seat back, black *1-21*, *1-45*
seat back, gray *1-21*, *1-45*, *1-53*
seat back, white *1-21*, *1-45*, *1-51*
seat bottom kit *1-19*
seat bracket *1-45*, *1-49*, *1-51*, *1-53*
seat gasket *1-19*
seat hinge *1-19*
seat support bracket *1-45*
seat support weldment *1-45*
select shaft *12-11*
sensor
oil level *8-15*
temperature *8-15*
sensor, motor speed *14-3*
shaft
axle *12-15*
balance *8-23*
center *12-13*
counter *12-13*
differential *12-15*
governor *12-11*
governor gear *12-11*
input *12-13*, *15-3*
intermediate *15-3*
rocker *8-19*
select *12-11*
shift *12-13*
shield, charger *16-15*
shield, controller *13-17*
shield, debris aux *5-9*, *5-11*, *5-13*, *5-15*
shield, debris primary *5-9*, *5-11*, *5-13*, *5-15*
shift lever *12-7*
shift shaft *12-13*
shock absorber (front) *6-11*
shock absorber (rear) *6-15*, *6-17*, *6-19*
shock absorber cushion *6-15*, *6-17*, *6-19*
shock absorber cushion retainer *6-15*, *6-17*, *6-19*
shock mounting bracket, drv *6-15*, *6-17*, *6-19*
shock mounting bracket, pas *6-15*, *6-17*, *6-19*
shoe retainer kit *5-3*, *5-5*
shoe, brake *5-3*, *5-5*
sleeve *6-11*, *6-13*, *6-15*, *6-17*, *6-19*, *12-11*
snubber bracket *8-5*, *8-7*
snubber, inner frame *8-5*, *8-7*
solenoid, 12-volt *7-15*, *7-19*
spacer *12-11*, *12-13*
spark plug *8-3*, *8-13*
speed controller
Excel w/Hi-Freq *13-17*
speed sensor *14-3*
speed sensor magnet *14-3*
speed sensor, motor *14-3*
spindle *6-13*
spiral backup ring *11-5*
spray, battery terminal protector *17-3*
spring *12-11*
brake *5-3*, *5-5*
brush *7-9*, *14-3*
compression *6-3*, *6-5*
drive button *11-5*
drive clutch *11-5*
driven clutch *11-7*
forward/reverse cam *12-3*
leaf, front *6-13*
valve *8-19*
spring retainer *8-19*
spring, leaf, rear *6-15*, *6-17*
spring, leaf, rear, 4-pass *1-49*, *1-51*, *1-53*, *6-19*
SPWS hose *13-13*
starter/generator *7-9*
starter/generator brush cover kit *7-9*
starter/generator brush spring *7-9*

INDEX

starter/generator brush terminal *7-9*
starter/generator frame and field *7-9*
starter/generator pulley *7-9*
steering column bearing press tool *17-7*
steering column cover *4-3*, *4-5*, *4-7*, *4-9*
steering column retaining ring tool *17-7*
steering wheel *6-3*, *6-5*
steering wheel (comfort grip) kit *6-3*
steering wheel puller tool *17-7*
stem, valve *2-3*, *2-5*
strap, bag *1-21*
strut, angle, tie *1-45*, *1-49*, *1-51*, *1-53*
strut, front canopy, lh *1-37*, *1-39*, *1-43*
strut, front canopy, rh *1-37*, *1-39*, *1-43*
stud
  exhaust mounting
    engine
      exhaust mounting stud *8-17*
  intake mounting
    engine
      intake mounting stud *8-17*, *9-13*
  lug *6-13*, *12-17*, *15-3*
support, canopy *1-37*, *1-39*
support, underbody, rear *1-21*
suspension, front structure *6-11*
switch
  key *4-11*, *4-13*, *4-15*
  light *4-3*, *4-5*, *4-7*, *4-9*, *4-15*
  limit *7-23*, *12-3*
  rocker *13-7*
  Tow/Run *13-7*
switch rubber boot *7-21*, *13-7*
switch, toggle *7-21*

T

12-volt solenoid *7-15*, *7-19*
tachometer *17-7*
taillight *4-7*, *4-9*
tank, fuel *9-3*, *9-5*
temperature sensor *8-15*
tensioner, timing chain *8-19*
tester, continuity *17-5*
thermometer, battery *17-3*
three-piece A-arm *6-11*
throttle body *9-11*
throttle, gas, Gen2, triac, sensor *5-9*, *7-3*
throttle, Gen2, no sensor *5-11*, *5-13*, *5-15*
tie rod end *6-9*
tie wrap *1-39*, *4-3*, *4-5*, *4-7*, *4-9*, *6-9*, *12-5*, *13-5*, *13-19*, *16-13*
timing chain *8-19*
timing chain guide *8-19*
tire *2-3*
tire, pro tour, 205-50 x 10 *2-5*
toggle switch *7-21*
tool
  accelerator pedal adjustment *17-3*
  belt tensioning, starter/generator *17-7*
  charger bezel *17-3*
  clutch cam installation *17-3*
  drive clutch holder *17-3*
  steering column bearing press *17-7*
  steering column retaining ring *17-7*
  steering wheel puller *17-7*
  transaxle axle seal *17-7*
  transaxle pinion seal *17-7*
  transmission *17-7*
tool kit, clutch *17-3*
touch-up paint *17-5*
Tow/Run switch *13-7*
transaxle (Electric Vehicle) *15-3*
transaxle axle seal tool *17-7*
transaxle pinion seal tool *17-7*
transaxle, open-diff (Gas Vehicle) *12-11*
transmission tool *17-7*
tube
  axle *12-15*, *15-3*
  battery cross rod *13-9*, *13-11*
  oil filler *8-21*
Tuflok *1-23*
turn signal bulb *4-3*, *4-5*, *4-7*, *4-9*

U

U-bolt *1-49*, *1-51*, *1-53*, *6-15*, *6-17*, *6-19*
underbody *1-13*, *1-23*
underbody cover kit *1-9*
underbody support, rear *1-21*
urethane bushing *6-15*, *6-17*, *6-19*
USB cover *16-3*, *16-5*, *16-7*, *16-9*, *16-13*, *16-15*

V

valve
  exhaust *8-19*
  intake *8-19*
valve collet *8-19*
valve cover *8-17*
valve cover gasket *8-17*
valve guide *8-17*
valve seal *8-17*
valve spring *8-19*
valve spring compressor *17-7*
valve stem *2-3*, *2-5*
vent
  fuel tank *9-3*, *9-5*
  transaxle *12-11*
vent, barb *9-9*
volt ohm meter *17-7*
voltage regulator *7-15*, *7-19*

W

warning light, low oil *4-13*, *4-15*
water quality light *13-15*
wedge, bearing puller *17-3*
weight
  clutch *11-5*
  secondary clutch *11-5*
weldment
  governor bracket *9-15*, *12-9*
  press *17-3*
wheel *2-3*, *2-5*
  steering *6-3*, *6-5*
wire
  green, starter/generator *7-5*, *7-7*, *7-9*
  ground, fuel tank *7-5*, *7-7*, *9-3*, *9-5*
wire harness *4-3*, *4-5*, *4-7*, *4-9*, *7-5*, *7-7*, *13-5*
wire harness, Excel w/Hi-Freq, MCOR3 *13-5*
wire harness, onboard battery charger *16-15*
wrap, tie *1-39*, *4-3*, *4-5*, *4-7*, *4-9*, *6-9*, *12-5*, *13-5*, *13-19*, *16-13*

Y

yoke, gear *17-5*

Club Car, Inc.
P.O. Box 204658
Augusta, GA 30917-4658
USA

Web www.clubcar.com
Phone 1.706.863.3000
1.800.ClubCar
Int'l +1 706.863.3000
Fax 1.706.863.5808

Ingersoll Rand
Industrial Technologies