GENERAL NOTES

1. ALL WORK SHALL CONFORM TO THE PROJECT SPECIFICATIONS. WORK NOT COVERED BY THE PROJECT SPECIFICATIONS SHALL CONFORM TO THE LATEST EDITION AND SUPPLEMENTS OF THE CALIFORNIA BUILDING CODE AND THE STANDARD SPECIFICATIONS FOR PUBLIC WORKS CONSTRUCTION (2012 GREEN BOOK) AND CITY OF LOS ANGELES.
2. DUST SHALL BE CONTROLLED BY WATERING AND/OR DUST PALLIATIVE.
3. SANITARY FACILITIES SHALL BE MAINTAINED ON THE SITE DURING THE CONSTRUCTION PERIOD.
4. WORK HOURS ARE LIMITED FROM 7:30 AM TO 7:00 PM MONDAY THROUGH FRIDAY.
5. THE GRADING PLAN WHEN APPROVED SHALL BE ON THE JOB SITE AT ALL TIMES.
6. CONTRACTOR IS RESPONSIBLE FOR LOCATING AND PROTECTING UTILITIES.
7. APPROVED DRAINAGE PROVISIONS AND PROTECTIVE MEASURES MUST BE USED TO PROTECT RIVER.
8. POSITIVE DRAINAGE SHALL BE MAINTAINED AWAY FROM ALL BUILDING AND SLOPE AREAS.
9. NO PAINT, PLASTER, CEMENT, SOIL, MORTAR OR OTHER RESIDUE SHALL BE ALLOWED TO ENTER STREET OR RIVER. ALL MATERIAL AND WASTE SHALL BE REMOVED FROM THE SITE.
10. CONSTRUCTION SITE MUST BE FENCED AND SECURE AT ALL TIMES AND SHALL BE THE SOLE RESPONSIBILITY OF THE CONTRACTOR.
11. ANY CONTAMINATED SOIL ENCOUNTERED SHALL BE BROUGHT TO THE ATTENTION OF THE PROJECT MANAGER IMMEDIATELY.

NOTICE TO CONTRACTOR(S)

1. SPECIFICATIONS: ALL WORK SHALL CONFORM TO THE PROJECT SPECIFICATIONS. WORK NOT COVERED BY THE PROJECT SPECIFICATIONS SHALL CONFORM TO THE LATEST EDITION AND SUPPLEMENTS OF CALIFORNIA BUILDING CODE.
2. UNDERGROUND SERVICE ALERT: BEFORE COMMENCING ANY EXCAVATION, THE CONTRACTOR SHALL OBTAIN AN UNDERGROUND SERVICE ALERT (USA) INQUIRY I.D. NUMBER BY CALLING 8-1-1. TWO WORKING DAYS SHALL BE ALLOWED AFTER THE I.D. NUMBER IS OBTAINED AND BEFORE THE CONTRACTOR STARTS THE EXCAVATION WORK SO THAT UTILITY OWNERS CAN BE NOTIFIED.
3. CONTRACTOR SHALL BE RESPONSIBLE FOR ANY DAMAGE TO FACILITIES.
4. PLANS ARE NOT TO BE UTILIZED UNLESS STAMPED "APPROVED" BY THE ENGINEER OF RECORD.
5. CONTRACTOR SHALL PROVIDE TIMELY NOTIFICATION TO THE ENGINEER OF RECORD OF ANY POTENTIAL OR ACTUAL DISCREPANCIES BETWEEN CIVIL PLANS AND OTHER PLANS/ACTUAL FIELD CONDITIONS.
6. CONTRACTOR SHALL MAINTAIN A COMPLETE SET OF PLANS IN THE FIELD. PLANS SHALL BE MARKED UP TO REFLECT ACTUAL OR AS-BUILT CONDITIONS. PLANS SHALL BE KEPT CURRENT. CONTRACTOR SHALL ALSO MAINTAIN ALL NECESSARY STANDARD PLANS AND SPECIFICATIONS IN THE FIELD.
7. QUANTITIES PROVIDED HEREIN ARE ENGINEER'S ESTIMATES FOR PERMITTING OR BONDING PURPOSES ONLY AND ARE NOT TO BE USED FOR BIDDING. CONTRACTOR SHALL PERFORM ITS OWN CONSTRUCTION TAKEOFFS.
8. NOT ALL UTILITIES MAY BE SHOWN, CONTRACTOR SHALL FIELD VERIFY ELEVATIONS AND LOCATIONS OF ALL AFFECTED UTILITIES. PROTECT IN PLACE, RELOCATE, OR REPLACE AS NECESSARY. PROVIDE TEMPORARY UTILITY SERVICES AS NECESSARY.
9. ELEVATIONS INDICATED MAY HAVE BEEN INTERPOLATED FROM EXISTING TOPOGRAPHIC OR RECORD MAPS, CONTRACTOR SHALL FIELD VERIFY ELEVATIONS AND LOCATIONS WHERE PROPOSED IMPROVEMENTS JOIN EXISTING.
10. ROUGH GRADE, FINISH GRADE, AND AS-BUILT CERTIFICATIONS MAY BE NECESSARY. CERTIFICATION SHALL BE PERFORMED BY THE CONTRACTOR'S ENGINEER AND PROVIDED TO THE ENGINEER OF RECORD IF PER WCA/ANF REQUIREMENTS.
11. APPROVAL OF THESE PLANS BY THE WCA/ANF DOES NOT CONSTITUTE A REPRESENTATION AS TO THE ACCURACY OR COMPLETENESS OF THE LOCATION OR THE EXISTENCE OR NON-EXISTENCE OF ANY UTILITY AND/OR STRUCTURE WITHIN THE LIMITS OF THIS PROJECT. THE CONTRACTOR IS REQUIRED TO TAKE ALL DUE PRECAUTIONARY MEANS TO PROTECT THE UTILITIES OF RECORD OR NOT OF RECORD OR NOT SHOWN ON THESE PLANS.
12. THE GRADING CONTRACTOR SHALL VERIFY THE PRECISE GRADING QUANTITY AS SHOWN ON THIS PLAN AS PART OF HIS BID.
13. CONTRACTOR SHALL BE RESPONSIBLE FOR OBTAINING ALL REQUIRED PERMITS PRIOR TO COMMENCEMENT OF GRADING OPERATIONS.

UNAUTHORIZED CHANGES AND USES: THE ENGINEER PREPARING THESE PLANS WILL NOT BE RESPONSIBLE FOR, OR LIABLE FOR, UNAUTHORIZED CHANGES TO OR USES OF THESE PLANS. ALL CHANGES TO THE PLANS MUST BE IN WRITING AND MUST BE APPROVED BY THE PREPARER OF THESE PLANS AND THE WCA/ANF.

ADVANCE CONSTRUCTION NOTICE SIGNS:

14. THE CONTRACTOR SHALL VERIFY ALL DIMENSION AND CONDITIONS IN THE FIELD PRIOR TO STARTING ANY WORK.
15. THE ENGINEER DOES NOT WARRANT THE ACCURACY OF SCALED DIMENSION ON ANY PLAN. ALL DIMENSIONS SHALL BE AS DESIGNATED ON THE PLAN.
17. THE CONTRACTOR SHALL PROTECT ALL PUBLIC AND PRIVATE PROPERTY DURING THE PERFORMANCE OF WORK DONE UNDER THIS CONTRACT. THE CONTRACTOR SHALL TAKE THE NECESSARY PRECAUTION TO AVOID ANY DAMAGE TO ANY STRUCTURES OR FEATURES ADJACENT TO THE CONSTRUCTION LIMITS, THE CONTRACTOR SHALL ALSO PROVIDE FOR THE PROTECTION OF THE PEDESTRIANS.
18. THE CONTRACTOR SHALL OBTAIN NECESSARY PERMITS PRIOR TO COMMENCING ANY GRADING OR EXCAVATIONS.
19. SELECTIVE REMOVALS:

    19.A. REMOVE EXISTING IMPROVEMENTS THAT INTERFERE WITH THE CONSTRUCTION OF THIS PROJECT, AND NO MORE THAN IS INDICATED IN THE DEMOLITION PLAN.

    19.B. ALL REMOVALS OR RELOCATIONS OF EXISTING UTILITIES SHALL BE COORDINATED WITH THE OWNER OF SAID UTILITY. NO REMOVALS OR RELOCATIONS OF EXISTING UTILITIES SHALL COMMENCE PRIOR TO APPROVAL OF SAID UTILITY.

20. REPAIR AND/OR REPLACE ANY EXISTING BROKEN OR OFF-GRADE PAVEMENT, CONCRETE CURB, GUTTER OR SIDEWALK IMMEDIATELY ADJACENT TO OR WITHIN THE AREA OF THIS IMPROVEMENT SATISFACTORY TO THE ANF.
21. SURVEY MONUMENT PRESERVATION IS REQUIRED AND SHALL INCLUDE SUBMITTAL OF PRE AND POST CONSTRUCTION SURVEY MONUMENT TIES TO THE ENGINEER.

STORM DRAIN CONSTRUCTION NOTES:

22. NO CONSTRUCTION DEBRIS WILL BE ALLOWED TO FALL IN TO THE CATCH BASIN OR STORMDRAIN, IF ANY MATERIAL IS INADVERTENTLY INTRODUCED, THEN IT WILL BE REMOVED IMMEDIATELY.
23. TRENCH BACKFILL FOR ALL STORM DRAINS CONSTRUCTED IN DRAINAGE EASEMENTS SHALL BE MECHANICALLY COMPACTED TO A RELATIVE DENSITY OF 90%.

LAY DOWN AREA:

24. THE CONTRACTOR SHALL BE RESPONSIBLE TO SECURE AND PAY FOR ALL NECESSARY CONSTRUCTION LAYDOWN AREAS.
25. THE CONTRACTOR SHALL ASSUME ALL RESPONSIBILITIES OF RENTING OPERATING EQUIPMENTS.
26. ALL REPAIRS TO CONSTRUCTION LAYDOWN AREAS AND TEMPORARY IMPROVEMENTS SHALL BE INSPECTED AND APPROVED BY THE INSPECTOR AND/OR AN AUTHORIZED REPRESENTATIVE OF THE PROPERTY OWNER PER REQUEST.
27. THE CONTRACTOR SHALL REMOVE, REGRADE AND, WHEN NECESSARY, BACKFILL TO RESTORE THE CONSTRUCTION LAY DOWN ACCESS AND TEMPORARY IMPROVEMENTS TO ITS ORIGINAL/FORMER CONDITION AT THE COMPLETION OF THE WORK.
28. THE CONTRACTOR SHALL BACKFILL EXCAVATED AREAS WITH ENGINEERED FILL UP TO THE ORIGINAL GRADE, UNLESS OTHERWISE SPECIFIED OR INDICATED ON THESE PLANS. BACKFILL PIPE TRENCH ACCESSES ONLY AFTER PIPING HAS BEEN INSPECTED.

ESTIMATED EARTHWORK QUANTITIES

1. ESTIMATED EARTH WORK QUANTITIES:

   1.A. CUT: XXX C.Y.
   1.B. FILL: XXX C.Y.
   1.C. EXPORT: XXX C.Y.

2. IT IS THE GRADING CONTRACTOR'S RESPONSIBILITY TO REVIEW THE GRADING PLANS AND SOILS REPORT THOROUGHLY PRIOR TO SITE MOBILIZATION. IT IS ALSO THE GRADING CONTRACTOR'S RESPONSIBILITY TO NOTIFY THE CIVIL AND SOILS ENGINEERS IF ONSITE DISCREPANCIES ARE OBSERVED THAT WOULD AFFECT THE EARTHWORK QUANTITIES.
3. THE EXISTING TOPOGRAPHY AS DELINEATED ON THESE DRAWINGS SHALL BE UTILIZED AS THE BASIS FOR ALL EARTHWORK COMPUTATIONS. SAID TOPOGRAPHY SHALL BE PRESUMED TO BE ACCEPTABLE TO ALL INTERESTED PARTIES UNLESS A DEVIATION IS FOUND PRIOR TO THE START OF GRADING ANY SPECIFIC AREAS. ANY DEVIATION SO DETERMINED SHALL BE PROMPTLY TRANSMITTED TO ALL INTERESTED PARTIES.
4. THE CONTRACTOR IS REQUIRED TO ESTIMATE THE QUANTITIES OF GRADING WORK TO BE DONE AND INCLUDE ALL COSTS THEREFROM IN HIS BID, AS NO ADDITIONAL ALLOWANCE WILL BE MADE WITHOUT PRIOR CONSENT FROM THE OWNER.
5. OVER-EXCAVATION AND/OR EXCESS BACKFILLING OR DUPLICATION OF GRADING ACTIVITIES IS NOT A BASIS FOR ADDITIONAL COMPENSATION. THIS ALSO APPLIES WHERE MATERIAL IS TO BE REMOVED AND REPLACED TO REDUCE MOISTURE CONTENT.
6. OFF-SITE DISPOSAL OF EXCAVATION MATERIAL IS THE RESPONSIBILITY OF THE CONTRACTOR AND SHALL BE INCLUDED IN HIS BID. THE CONTRACTOR SHALL HOLD THE OWNER AND ENGINEER HARMLESS AS A RESULT OF ANY CLAIMS ARISING FROM ACTIONS ENROUTE OR AWAY FROM THE SITE. EXCAVATION MATERIALS SHALL BE DISPOSED OF AT A LEGAL LANDFILL WITH A HAUL PERMIT. NO SOIL OR DEBRIS SHALL BE DISPOSED OF ON GOVERNMENT PROPERTY WITHOUT THE PERMISSION OF THE ANGELES NATIONAL FOREST.
7. EARTH VOLUMES SHOWN HEREIN ARE ESTIMATES BASED UPON THE GEOTECHNICAL ANALYSIS PERFORMED BY THE NAMED SOILS ENGINEER AND TOPOGRAPHIC SURVEY OF THE EXISTING GROUND SURFACE AT THE TIME OF PLAN PREPARATION. EARTHWORK VOLUMES ARE COMPUTED BY METHODS COMMONLY USED IN STANDARD ENGINEERING PRACTICE, AND ARE INTENDED FOR USE IN ESTABLISHING GOVERNING AGENCY FEES. ACTUAL FIELD CONDITIONS MAY VARY FROM OBSERVED OR MEASURED CONDITIONS AT THE TIME OF PLAN PREPARATION. EARTHWORK QUANTITIES MAY VARY AS A RESULT.
8. THE QUANTITIES FOR THESE PLANS ARE BASED UPON 0% SHRINKAGE AND 0% SUBSIDENCE. ACTUAL SHRINKAGE VOLUME MAY VARY CONSIDERABLY.

GRADING NOTES

GENERAL NOTES

1. ALL GRADING AND CONSTRUCTION SHALL CONFORM TO LATEST EDITION OF THE CALIFORNIA BUILDING CODE UNLESS SPECIFICALLY NOTED ON THESE PLANS.
2. ANY MODIFICATIONS OF OR CHANGES TO APPROVED GRADING PLANS MUST BE APPROVED BY THE CIVIL ENGINEER.
3. THE CONTRACTOR SHALL SUBMIT AN INSURANCE CERTIFICATE INDEMNIFYING AND NAMING THE COUNTY OF LOS ANGELES AS AN ADDITIONAL INSURED FOR ALL WORK IN THE PUBLIC RIGHT OF WAY.
4. CALIFORNIA PUBLIC RESOURCES CODE (SECTION 5097.98) AND HEALTH AND SAFETY CODE (SECTION 7050.5) ADDRESS THE DISCOVERY AND DISPOSITION OF HUMAN REMAINS. IN THE EVENT OF DISCOVERY OR RECOGNITION OF ANY HUMAN REMAINS IN ANY LOCATION OTHER THAN A DEDICATED CEMETERY, THE LAW REQUIRES THAT GRADING IMMEDIATELY STOPS AND NO FURTHER EXCAVATION OR DISTURBANCE OF THE SITE, OR ANY NEARBY AREA WHERE HUMAN REMAINS MAY BE LOCATED, OCCUR UNTIL THE FOLLOWING HAS MEASURES HAVE BEEN TAKEN:

   4.A. THE COUNTY CORONER HAS BEEN INFORMED AND HAS DETERMINED THAT NO INVESTIGATION OF THE CAUSE OF DEATH IS REQUIRED, AND

   4.B. IF THE REMAINS ARE OF NATIVE AMERICAN ORIGIN, THE DESCENDANTS FROM THE DECEASED NATIVE AMERICANS HAVE MADE A RECOMMENDATION FOR THE MEANS OF TREATING OR DISPOSING, WITH APPROPRIATE DIGNITY, OF THE HUMAN REMAINS AND ANY ASSOCIATED GRAVE GOODS.

5. THE LOCATION AND PROTECTION OF ALL UTILITIES IS THE RESPONSIBILITY OF THE PERMITTEE.
6. SLOPES SHALL BE A MAXIMUM 3:1, UNLESS OTHERWISE APPROVED AND CERTIFIED BY THE GEOTECHNICAL ENGINEER.
7. ALL GRADES BETWEEN CONTOURS AND/OR SPOT ELEVATIONS SHALL BE ASSUMED TO BE STRAIGHT GRADES. THERE SHALL BE NO LOCALIZED DEPRESSIONS OR HUMPS.
8. TRENCHES AND SLOPES WITH A VERTICAL HEIGHT GREATER THAN 4 FT SHALL BE PROPERLY PROTECTED PER OCCUPATIONAL SAFETY AND HEALTH ADMINISTRATION (OSHA) STANDARDS.
9. ALL EXPORT MATERIAL FROM THE SITE SHALL BE HAULED TO A LEGAL LANDFILL. A COPY OF THE LANDFILL RECEIPT SHALL BE PROVIDED TO THE INSPECTOR UPON REQUEST.
10. A COPY OF THE GRADING PERMIT AND APPROVED GRADING PLANS SHALL BE AVAILABLE AT THE SITE AT ALL TIMES.
11. PRIOR TO GRADING, SITE BOUNDARIES, EASEMENTS, DRAINAGE DEVICES, AND RESTRICTED USE AREAS SHALL BE LOCATED PER CONSTRUCTION STAKING BY THE CIVIL ENGINEER OR LICENSED SURVEYOR.
12. AN EROSION CONTROL PLAN, TO BE REVIEWED AND APPROVED BY THE ANF, IS REQUIRED FOR ALL GRADING PERMITS.
13. TRANSFER OF RESPONSIBILITY: IF THE CIVIL ENGINEER, THE GEOTECHNICAL ENGINEER, OR THE ENGINEERING GEOLOGIST OF RECORD IS CHANGED DURING GRADING, ALL GRADING ACTIVITIES SHALL STOP UNTIL THE REPLACEMENT AGREES IN WRITING TO ACCEPT RESPONSIBILITY WITHIN THE AREA OF TECHNICAL COMPETENCE FOR APPROVAL UPON COMPLETION OF WORK. THE PERMITTEE SHALL BE RESPONSIBLE TO NOTIFY THE CITY ENGINEER IN WRITING OF SUCH CHANGE PRIOR TO RECOMMENCING ANY GRADING.

INSPECTION NOTES

1. THE PERMITTEE OR HIS AGENT SHALL NOTIFY THE WCA/ANF AT LEAST TWO WORKING DAYS IN ADVANCE OF REQUIRED INSPECTIONS AT THE FOLLOWING STAGES OF WORK.
2. 18A. PRE-GRADE - BEFORE THE START OF ANY EARTH DISTURBING ACTIVITY OR CONSTRUCTION.
3. 18B. INITIAL - WHEN THE SITE HAS BEEN CLEARED OF VEGETATION AND UNAPPROVED FILL HAS BEEN MITIGATED PER THE APPROVED GEOTECHNICAL REPORT. FILL SHALL NOT BE PLACED PRIOR TO THIS INSPECTION. PRIOR TO ANY CONSTRUCTION ACTIVITIES, INCLUDING GRADING, ALL STORM WATER POLLUTION PREVENTION MEASURES SHALL BE INSTALLED.
4. 18C. ROUGH - WHEN APPROXIMATE FINAL ELEVATIONS HAVE BEEN ESTABLISHED; DRAINAGE TERRACES, SWALES AND BERMS HAVE BEEN INSTALLED AT THE TOP OF THE SLOPE; AND ROUGH GRADING HAS BEEN CERTIFIED BY THE CIVIL ENGINEER AND THE GEOTECHNICAL ENGINEER.
5. 18D. FINAL - WHEN GRADING HAS BEEN COMPLETED; ALL DRAINAGE DEVICES INSTALLED; SLOPE PLANTING ESTABLISHED, IRRIGATION SYSTEMS INSTALLED; AS-BUILT PLANS SUBMITTED AND APPROVED; AND FINAL GRADING HAS BEEN CERTIFIED BY THE CIVIL ENGINEER AND GEOTECHNICAL ENGINEER.
6. ALL GRADED SITES MUST HAVE DRAINAGE SWALES, BERMS, AND OTHER DRAINAGE DEVICES INSTALLED PRIOR TO ROUGH GRADING APPROVAL.
7. THE CIVIL ENGINEER AND GEOTECHNICAL ENGINEER SHALL CERTIFY THE ROUGH GRADING AND FINAL GRADING PRIOR TO EACH RESPECTIVE INSPECTION.
8. FINAL GRADING MUST BE APPROVED BEFORE OCCUPANCY OF BUILDING WILL BE ALLOWED.

DRAINAGE NOTES

9. DRAINAGE ACROSS PROPERTY LINES SHALL NOT EXCEED THAT WHICH EXISTED PRIOR TO GRADING OR CONSTRUCTION. EXCESS OR CONCENTRATED DRAINAGE SHALL BE CONTAINED ON SITE OR DIRECTED TO AN APPROVED DRAINAGE FACILITY.
10. ROOF DRAINAGE MUST BE DIVERTED FROM GRADED SLOPES.
11. PROVISIONS SHALL BE MADE FOR CONTRIBUTORY DRAINAGE AT ALL TIMES.
12. A 2 PERCENT MINIMUM DRAINAGE SLOPE AWAY FROM PROPOSED STRUCTURES AND PROPERTY LINES SHALL BE PROVIDED.
13. DRAINAGE SWALES SHALL HAVE A 1 PERCENT MINIMUM DRAINAGE SLOPE.

GEOTECHNICAL NOTES

ALL WORK SHALL COMPLY WITH THE RECOMMENDATIONS INCLUDED IN THE GEOTECHNICAL ENGINEER'S REPORTS AND THE APPROVED GRADING PLANS AND SPECIFICATIONS.

GEOTECHNICAL ENGINEER: XXX
14. FILE NO.: _____
    DATE OF REPORT(S): XXX
    ADDENDA: _____

15. THE GEOTECHNICAL ENGINEER SHALL PROVIDE SUFFICIENT INSPECTIONS DURING THE PREPARATION OF THE NATURAL GROUND AND THE PLACEMENT AND COMPACTION OF THE FILL TO CERTIFY THE WORK IS BEING PERFORMED IN ACCORDANCE WITH THE APPROVED GRADING PLANS AND REPORTS.
16. THE GROUND SURFACE SHALL BE PREPARED TO RECEIVE FILL BY REMOVING VEGETATION, TOPSOIL, AND OTHER UNSUITABLE MATERIALS, EXCEPT FOR EXISTING TREES AND VEGETATION TO REMAIN, AND SCARIFYING THE GROUND TO PROVIDE A BOND WITH THE FILL MATERIAL. PROTECT REMAINING TREES DURING ALL OF CONSTRUCTION.
17. ALL FILL MATERIAL SHALL BE COMPACTED TO 90 PERCENT OF MAXIMUM DENSITY AS DETERMINED BY ASTMD 1557, MODIFIED PROCTOR, IN LIFTS AS RECOMMENDED IN THE GEOTECHNICAL ENGINEER'S REPORT, NOT TO EXCEED 8 INCHES IN DEPTH. THE CONTRACTOR SHALL OBTAIN AND PAY FOR ALL SOIL COMPACTION TESTS. SOILS COMPACTION TEST LOCATIONS WILL BE DETERMINED BY THE SOILS ENGINEER AND THE DEPARTMENT OF RECREATION AND PARKS.
18. ROCK(S) OR SIMILAR MATERIAL(S) GREATER THAN 8 INCHES IN DIAMETER SHALL NOT BE PLACED IN THE FILL UNLESS APPROVED BY THE GEOTECHNICAL ENGINEER.

PLANTING AND IRRIGATION NOTES

19. PLANTING AND IRRIGATION ON GRADED SLOPES SHALL BE INSTALLED TO PREVENT EROSION. THE PLANTING AND IRRIGATION SYSTEMS SHALL BE INSTALLED AS SOON AS PRACTICAL AFTER ROUGH GRADING. ALL SLOPE PLANTING MUST BE WELL ESTABLISHED PRIOR TO FINAL GRADING APPROVAL.

REGISTERED PROFESSIONAL ENGINEER
IVAN W. K. CHIU
No. C44672
EXP. 03/31/2026
CIVIL
STATE OF CALIFORNIA

NO.	DATE	REVISION

CALCIVIC ENGINEERING GROUP
CONSULTING ENGINEERS & LAND SURVEYORS
CIVIL / STRUCTURAL / LAND SURVEYING
2160 PARKHILL WAY, ALTADENA, CALIFORNIA 91001
TEL (626) 798-2828 FAX(626) 798-6844
E-MAIL calcivic@earthlink.net

GRADING PLAN
GENERAL NOTES

OAKS STAIRWAY & OVERLOOK
EAST FORK, SAN GABRIEL RIVER

CHECKED BY I.C.
DRAWN BY K.H.
PLAN SCALE AS SHOWN
DATE 04/27/23
JOB NO. 042723
SHEET NO. C-1.00 OF 6 SHTS

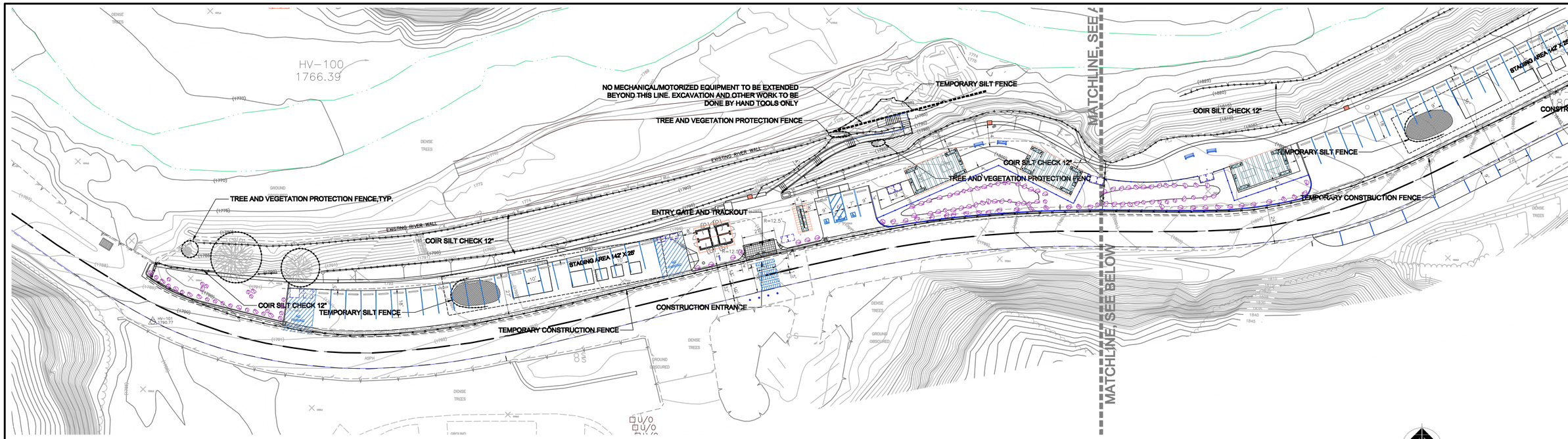

EROSION CONTROL NOTES:

1. SEE ENVIRONMENTAL PROTECTION NOTES, SHEETS L-4.00 TO L-4.03.
2. ALL PLANT MATERIAL (E.G., STRAW, MULCH, SEEDS, ETC.) USED FOR EROSION CONTROL AND/OR ROAD MAINTENANCE MUST BE CERTIFIED WEED-FREE. ONLY WEED-FREE RICE STRAW OR RICE MULCH SHALL BE ALLOWED.
3. ALL EROSION CONTROL MATERIAL MUST BE BIODEGRADABLE. WATTLES WRAPPED IN PHOTODEGRADABLE PLASTIC ARE NOT ACCEPTABLE.
4. TRASH AND FOOD SHALL BE STORED IN CLOSED CONTAINERS AND REMOVED DAILY TO REDUCE ATTRACTIVENESS TO OPPORTUNISTIC PREDATORS SUCH AS COYOTES, DOMESTIC AND FERAL DOGS, CATS, OPOSSUMS, SKUNKS, AND RACCOONS. LITTERING OF TRASH AND FOOD WASTE IS PROHIBITED.
5. ALL TRASH GENERATED FROM THE PROJECT WILL BE COLLECTED AND PROPERLY DISPOSED OF IN ROLL-OFF BINS LOCATED IN DESIGNATED STAGING AREAS AND THEN DISPOSED OF AS NEEDED OR AS REQUESTED BY THE USFS.
6. IF EXCAVATIONS ARE TO BE LEFT OPEN AND UNATTENDED FOR MORE THAN 12 HOURS, AN ESCAPE RAMP WILL BE CONSTRUCTED TO THE BOTTOM OF THE PIT WITH LESS THAN A 2:1 SLOPE, TO PROVIDE AN ESCAPE ROUTE TO PREVENT LIZARDS AND OTHER WILDLIFE IN THE AREA FROM GETTING TRAPPED IN THE EXCAVATION. PRIOR TO COMMENCEMENT OF WORK ACTIVITY EACH DAY, STAFF WILL CHECK ANY EXCAVATED PITS TO MAKE SURE THAT NO ANIMALS ARE TRAPPED. BEFORE BACKFILLING ANY EXCAVATION, IT MUST BE CHECKED TO MAKE SURE THAT NO WILDLIFE IS PRESENT WITHIN THE EXCAVATED PIT.
7. FUELING OF EQUIPMENT AND VEHICLES ON ANF LANDS SHALL BE CONDUCTED AT DESIGNATED LOCATIONS AS IDENTIFIED IN THE EROSION CONTROL PLAN, DESCRIBED BELOW. THESE LOCATIONS SHALL UTILIZE PROTECTIVE SHEETING TO COVER OPEN GROUND AND CONTAIN A BERMED EDGE (OR BUMPER) TO ENSURE CONTAINMENT IN THE EVENT OF A SPILL.

EROSION CONTROL LEGEND

TEMPORARY SILT FENCE

COIR SILT CHECK 12"

TREE AND VEGETATION PROTECTION FENCE

TEMPORARY CONSTRUCTION FENCE

PROJECT AREA

30 0 30 60 90

GRAPHIC SCALE
SCALE : 1"=30'

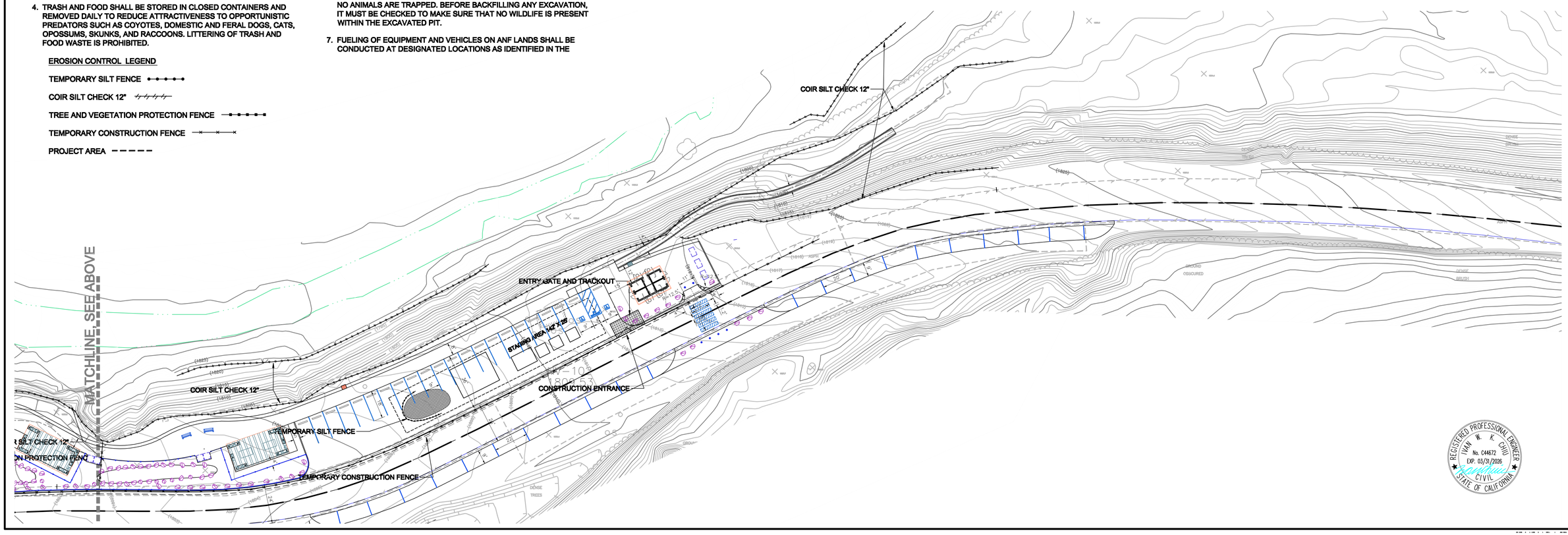

REGISTERED PROFESSIONAL ENGINEER
IVAN W. K. CHU
No. C44672
EXP. 03/31/2026
CIVIL
STATE OF CALIFORNIA

NO.	DATE	REVISION

CALCIVIC ENGINEERING GROUP
CONSULTING ENGINEERS & LAND SURVEYORS
CIVIL / STRUCTURAL / LAND SURVEYING
2160 PARKWELL WAY, ALTADENA, CALIFORNIA 91001
TEL (626) 798-2623 FAX(626) 798-6844
E-MAIL calcivic@earthlink.net

EROSION CONTROL PLAN

OAKS STAIRWAY & OVERLOOK
EAST FORK, SAN GABRIEL RIVER

CHECKED BY	I.C.
DRAWN BY	K.H.
PLAN SCALE	AS SHOWN
DATE	06/24/24
JOB NO.	042723
SHEET NO.	C-1.01 OF 8 SHTS

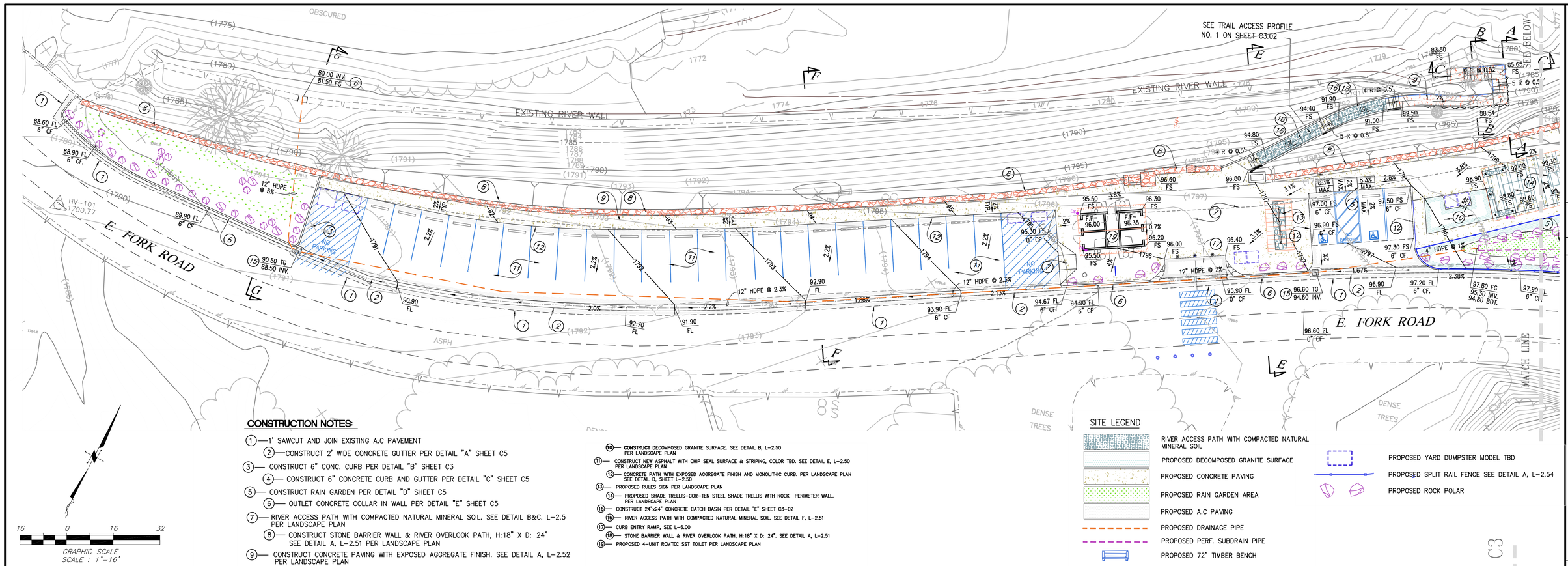

CONSTRUCTION NOTES:

1. 1' SAWCUT AND JOIN EXISTING A.C PAVEMENT
2. CONSTRUCT 2' WIDE CONCRETE GUTTER PER DETAIL "A" SHEET C5
3. CONSTRUCT 6" CONC. CURB PER DETAIL "B" SHEET C3
4. CONSTRUCT 6" CONCRETE CURB AND GUTTER PER DETAIL "C" SHEET C5
5. CONSTRUCT RAIN GARDEN PER DETAIL "D" SHEET C5
6. OUTLET CONCRETE COLLAR IN WALL PER DETAIL "E" SHEET C5
7. RIVER ACCESS PATH WITH COMPACTED NATURAL MINERAL SOIL. SEE DETAIL B&C. L-2.5 PER LANDSCAPE PLAN
8. CONSTRUCT STONE BARRIER WALL & RIVER OVERLOOK PATH, H:18" X D: 24" SEE DETAIL A, L-2.51 PER LANDSCAPE PLAN
9. CONSTRUCT CONCRETE PAVING WITH EXPOSED AGGREGATE FINISH. SEE DETAIL A, L-2.52 PER LANDSCAPE PLAN
10. CONSTRUCT DECOMPOSED GRANITE SURFACE. SEE DETAIL B, L-2.50 PER LANDSCAPE PLAN
11. CONSTRUCT NEW ASPHALT WITH CHIP SEAL SURFACE & STRIPING, COLOR TBD. SEE DETAIL E, L-2.50 PER LANDSCAPE PLAN
12. CONCRETE PATH WITH EXPOSED AGGREGATE FINISH AND MONOLITHIC CURB. PER LANDSCAPE PLAN SEE DETAIL D, SHEET L-2.50
13. PROPOSED RULES SIGN PER LANDSCAPE PLAN
14. PROPOSED SHADE TRELLIS-COR-TEN STEEL SHADE TRELLIS WITH ROCK PERIMETER WALL. PER LANDSCAPE PLAN
15. CONSTRUCT 24"x24" CONCRETE CATCH BASIN PER DETAIL "E" SHEET C3-02
16. RIVER ACCESS PATH WITH COMPACTED NATURAL MINERAL SOIL. SEE DETAIL F, L-2.51
17. CURB ENTRY RAMP, SEE L-6.00
18. STONE BARRIER WALL & RIVER OVERLOOK PATH, H:18" X D: 24". SEE DETAIL A, L-2.51
19. PROPOSED 4-UNIT ROMTEC SST TOILET PER LANDSCAPE PLAN

SITE LEGEND

- RIVER ACCESS PATH WITH COMPACTED NATURAL MINERAL SOIL
- PROPOSED DECOMPOSED GRANITE SURFACE
- PROPOSED CONCRETE PAVING
- PROPOSED RAIN GARDEN AREA
- PROPOSED A.C PAVING
- PROPOSED DRAINAGE PIPE
- PROPOSED PERF. SUBDRAIN PIPE
- PROPOSED 72" TIMBER BENCH
- PROPOSED YARD DUMPSTER MODEL TBD
- PROPOSED SPLIT RAIL FENCE SEE DETAIL A, L-2.54
- PROPOSED ROCK POLAR

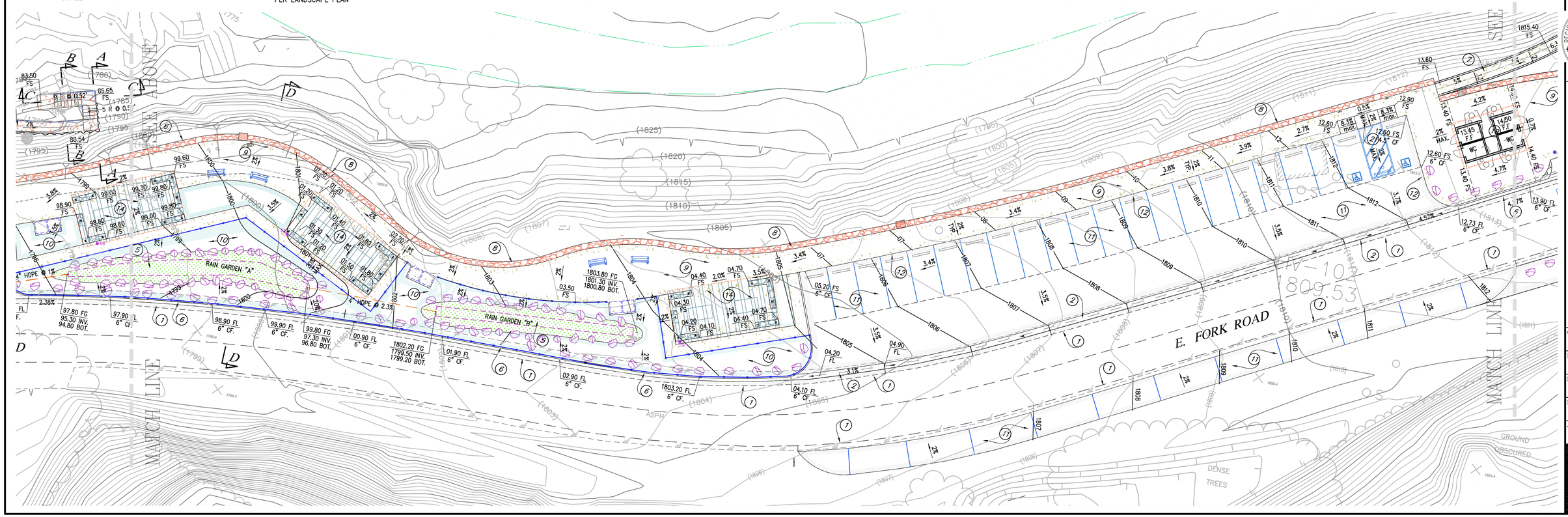

NO.	DATE	REVISION

CALCIVIC ENGINEERING GROUP
CONSULTING ENGINEERS & LAND SURVEYORS
CIVIL / STRUCTURAL / LAND SURVEYING
2160 PARNELL WAY, ALTADENA, CALIFORNIA 91001
TEL. (626) 798-2828 FAX.(626) 798-6644
E-MAIL: calcivic@earthlink.net

REGISTERED PROFESSIONAL ENGINEER
IVAN W. K. CHU
No. C44672
EXP. 03/31/2026
CIVIL
STATE OF CALIFORNIA

GRADING PLAN

OAKS STAIRWAY & OVERLOOK
EAST FORK, SAN GABRIEL RIVER

CHECKED BY: I.C.
DRAWN BY: K.H.
PLAN SCALE: 1" = 16'
DATE: 04/27/23
JOB NO. 042723

SHEET NO. C2 OF 6 SHTS

C:\Projects\Projects (Structural)\City\Street Address\Plan.dwg
07:01:01 04 / 30 / 2000

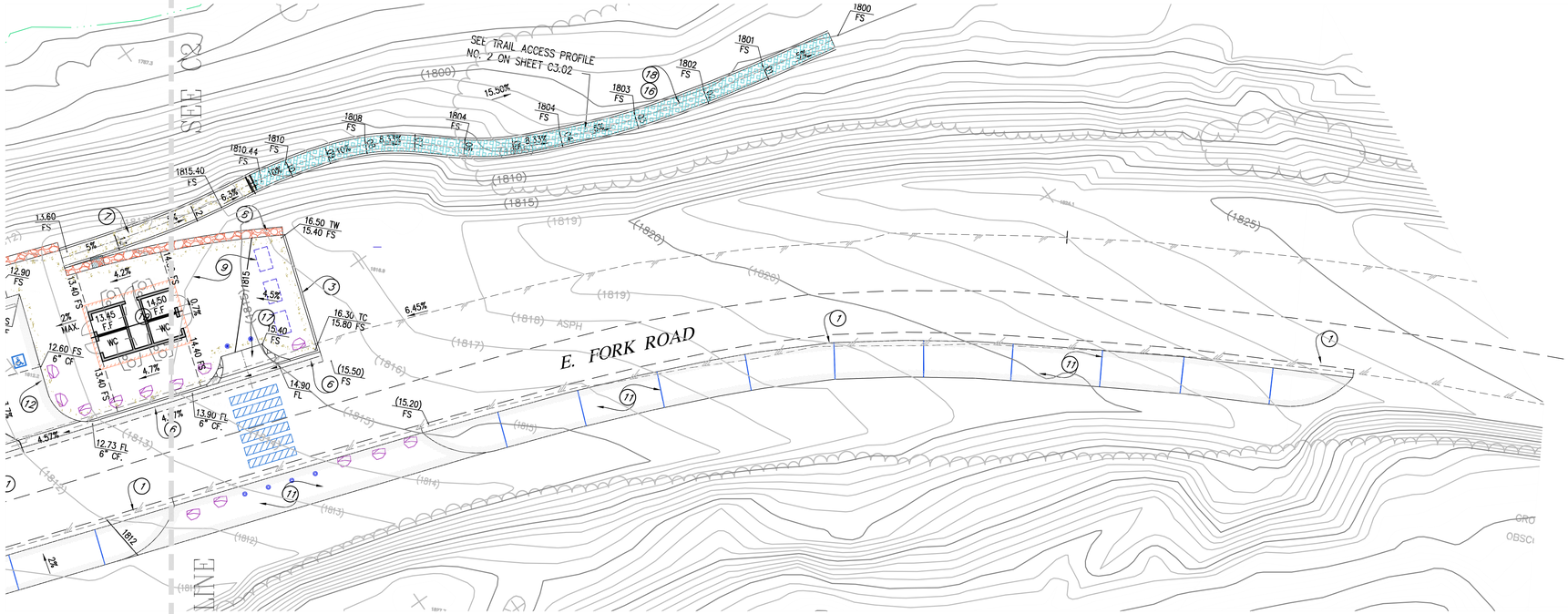

CONSTRUCTION NOTES:

1. 1' SAWCUT AND JOIN EXISTING A.C PAVEMENT
2. CONSTRUCT 2' WIDE CONCRETE GUTTER PER DETAIL "A" SHEET C5
3. CONSTRUCT 6" CONC. CURB PER DETAIL "B" SHEET C3
4. CONSTRUCT 6" CONCRETE CURB AND GUTTER PER DETAIL "C" SHEET C5
5. CONSTRUCT RAIN GARDEN PER DETAIL "D" SHEET C5
6. OUTLET CONCRETE COLLAR IN WALL PER DETAIL "E" SHEET C5
7. RIVER ACCESS PATH WITH COMPACTED NATURAL MINERAL SOIL. SEE DETAIL B&C. L-2.5 PER LANDSCAPE PLAN
8. CONSTRUCT STONE BARRIER WALL & RIVER OVERLOOK PATH, H:18" X D: 24" SEE DETAIL A, L-2.51 PER LANDSCAPE PLAN
9. CONSTRUCT CONCRETE PAVING WITH EXPOSED AGGREGATE FINISH. SEE DETAIL A, L-2.52 PER LANDSCAPE PLAN
10. CONSTRUCT DECOMPOSED GRANITE SURFACE. SEE DETAIL B, L-2.50 PER LANDSCAPE PLAN
11. CONSTRUCT NEW ASPHALT WITH CHIP SEAL SURFACE & STRIPING, COLOR TBD. SEE DETAIL E, L-2.50 PER LANDSCAPE PLAN
12. CONCRETE PATH WITH EXPOSED AGGREGATE FINISH AND MONOLITHIC CURB. PER LANDSCAPE PLAN SEE DETAIL D, SHEET L-2.50
13. PROPOSED RULES SIGN PER LANDSCAPE PLAN
14. PROPOSED SHADE TRELLIS-COR-TEN STEEL SHADE TRELLIS WITH ROCK PERIMETER WALL. PER LANDSCAPE PLAN
15. CONSTRUCT 24"x24" CONCRETE CATCH BASIN PER DETAIL "E" SHEET C3-02
16. RIVER ACCESS PATH WITH COMPACTED NATURAL MINERAL SOIL. SEE DETAIL F, L-2.51
17. CURB ENTRY RAMP, SEE L-6.00
18. STONE BARRIER WALL & RIVER OVERLOOK PATH, H:18" X D: 24". SEE DETAIL A, L-2.51
19. PROPOSED 4-UNIT ROMTEC SST TOILET PER LANDSCAPE PLAN

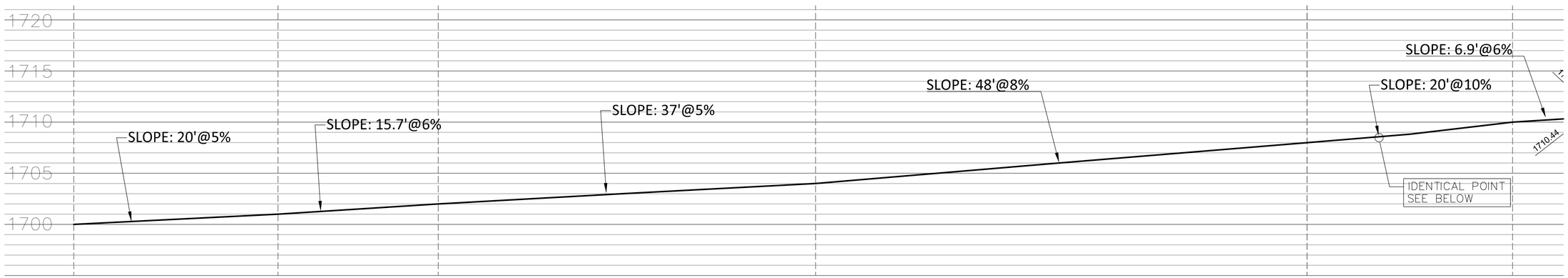

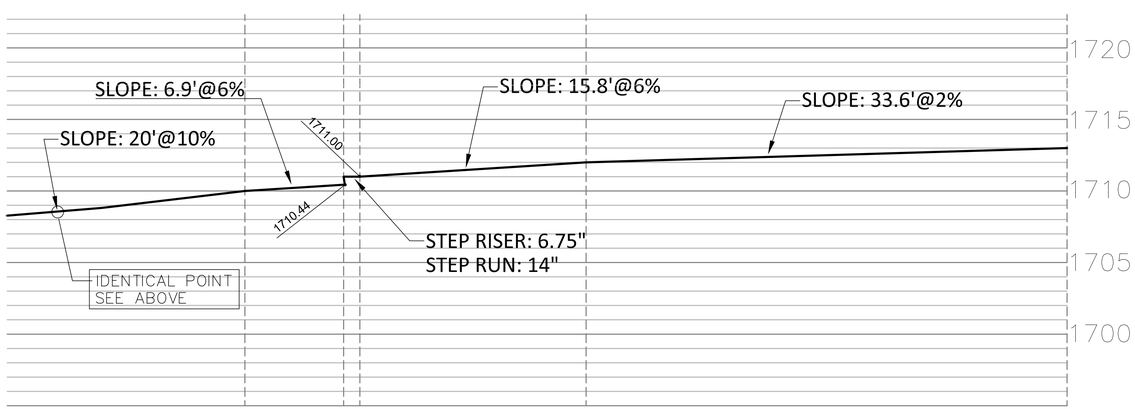

TRAIL ACCESS PROFILE NO.2

HORIZ. 1"=5'
VERT. 1"=5'

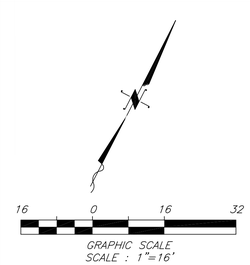

NO.	DATE	REVISION

CALCIVIC ENGINEERING GROUP
CONSULTING ENGINEERS & LAND SURVEYORS
CIVIL / STRUCTURAL / LAND SURVEYING
2160 PARNELL WAY, ALTADENA, CALIFORNIA 91001
TEL. (626) 798-2828 FAX(626) 798-6644
E-MAIL calcivic@earthlink.net

REGISTERED PROFESSIONAL ENGINEER
IVAN W. K. CHU
No. C44672
EXP. 03/31/2026
CIVIL
STATE OF CALIFORNIA

GRADING PLAN

OAKS STAIRWAY & OVERLOOK
EAST FORK, SAN GABRIEL RIVER

CHECKED BY	I.C.
DRAWN BY	K.H.
PLAN SCALE	1" = 16'
DATE	04/27/23
JOB NO.	042723

SHEET NO.
C3
OF 6 SHTS

C:\Projects\Projects (Structural)\City\Street Address\Plan.dwg
07:01:01 04 / 30 / 2000

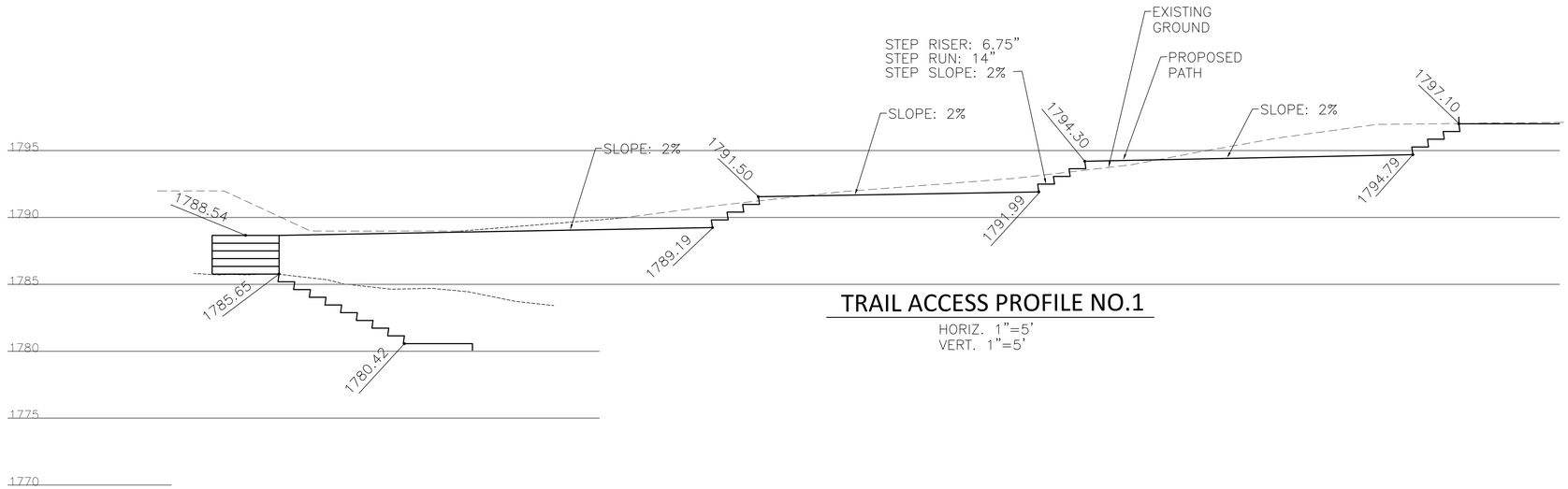

TRAIL ACCESS PROFILE NO.1

HORIZ. 1"=5'
VERT. 1"=5'

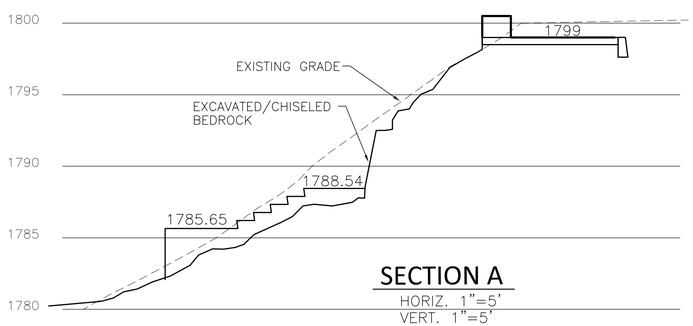

SECTION A

HORIZ. 1"=5'
VERT. 1"=5'

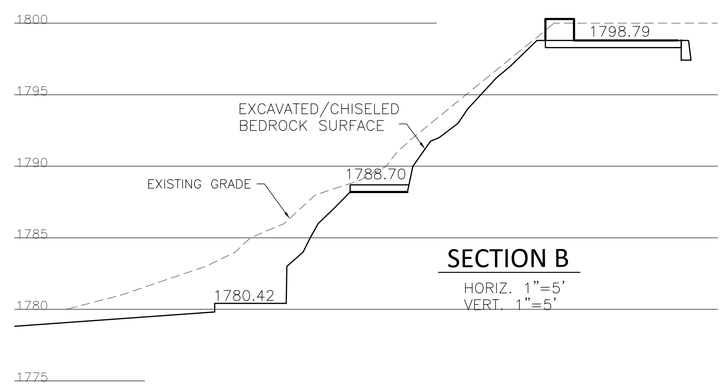

SECTION B

HORIZ. 1"=5'
VERT. 1"=5'

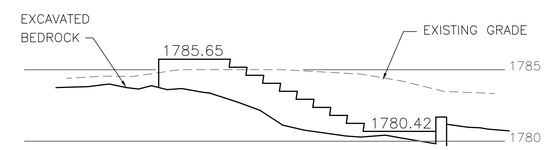

SECTION C

HORIZ. 1"=5'
VERT. 1"=5'

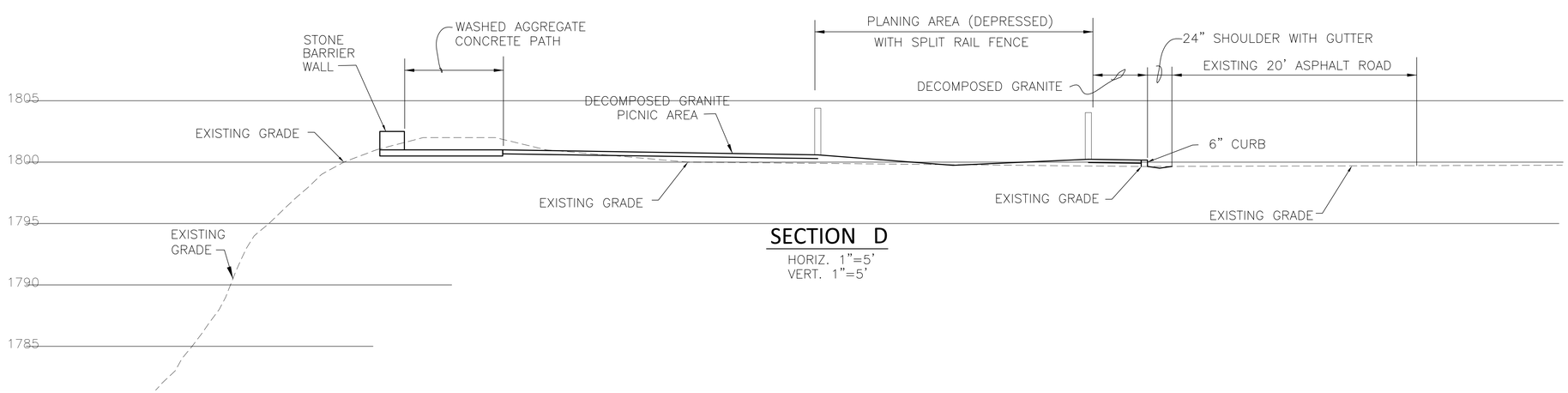

SECTION D

HORIZ. 1"=5'
VERT. 1"=5'

REGISTERED PROFESSIONAL ENGINEER
IVAN N. K. CHU
No. C44672
EXP. 03/31/2026
CIVIL
STATE OF CALIFORNIA

NO.	DATE	REVISION

CALCIVIC ENGINEERING GROUP
CONSULTING ENGINEERS & LAND SURVEYORS
CIVIL / STRUCTURAL / LAND SURVEYING
2160 PARNELL WAY, ALTADENA, CALIFORNIA 91001
TEL (626) 798-2023 FAX(626) 798-6944
E-MAIL calcivic@earthlink.net

SECTION AND TRAIL PROFILE #1

OAKS STAIRWAY & OVERLOOK
EAST FORK, SAN GABRIEL RIVER

CHECKED BY: I.C.
DRAWN BY: K.H.
PLAN SCALE: AS SHOWN
DATE: 04/27/23
JOB NO. 042723

SHEET NO. C-3.01 OF 6 SHTS

C:\Projects\Projects (Structural)\City\Street Address\Plan.dwg
07:01:01 04 / 30 / 2000

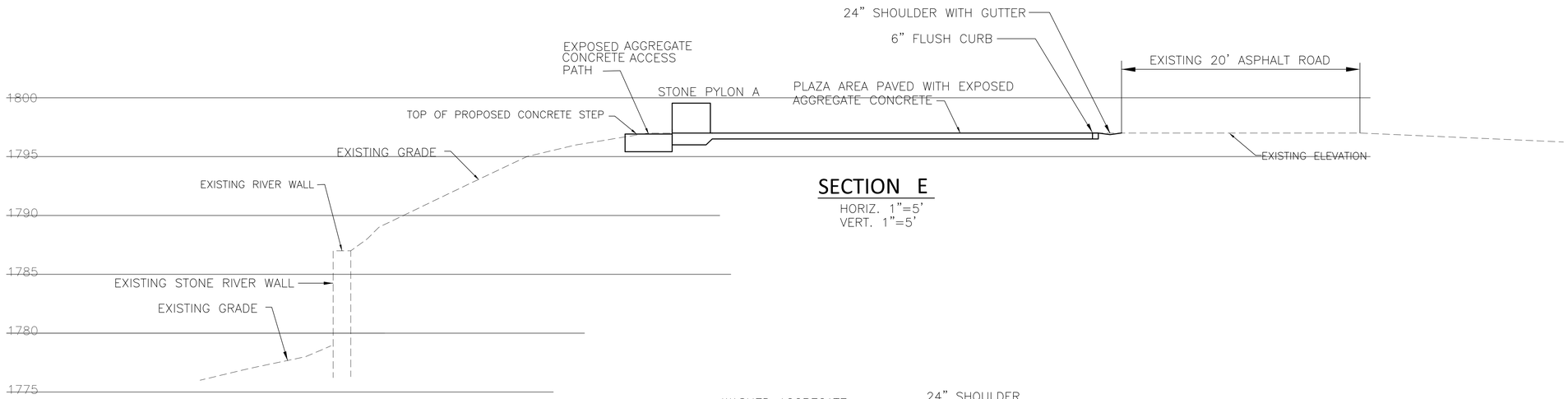

SECTION E

HORIZ. 1"=5'
VERT. 1"=5'

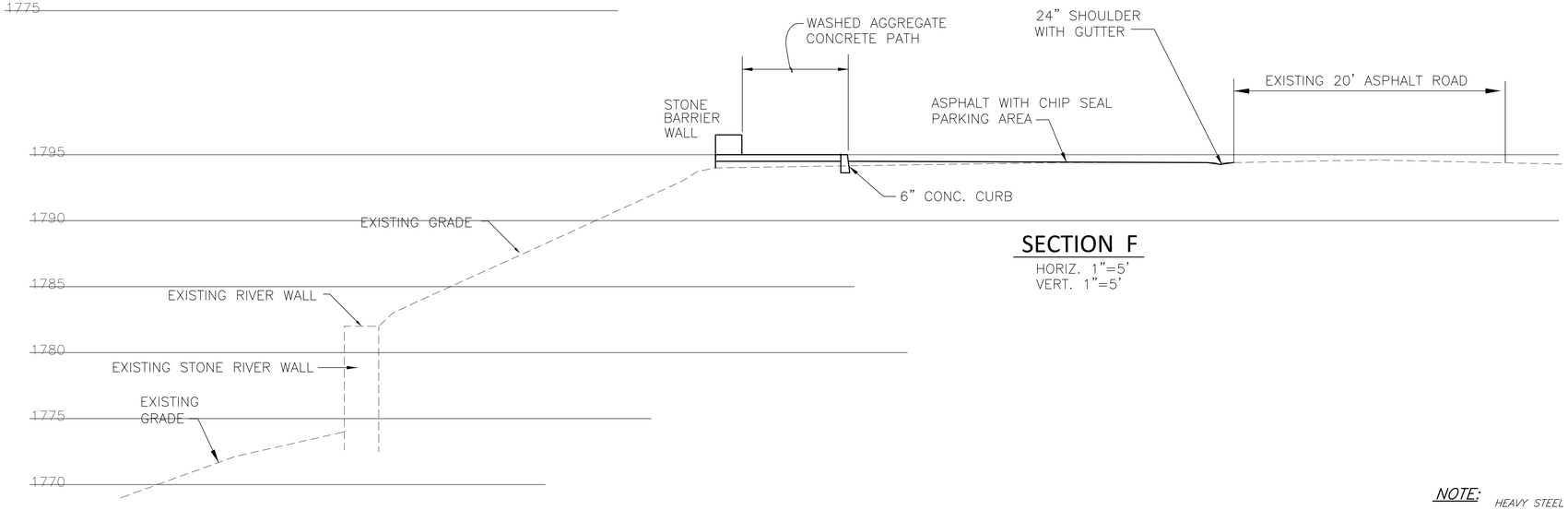

SECTION F

HORIZ. 1"=5'
VERT. 1"=5'

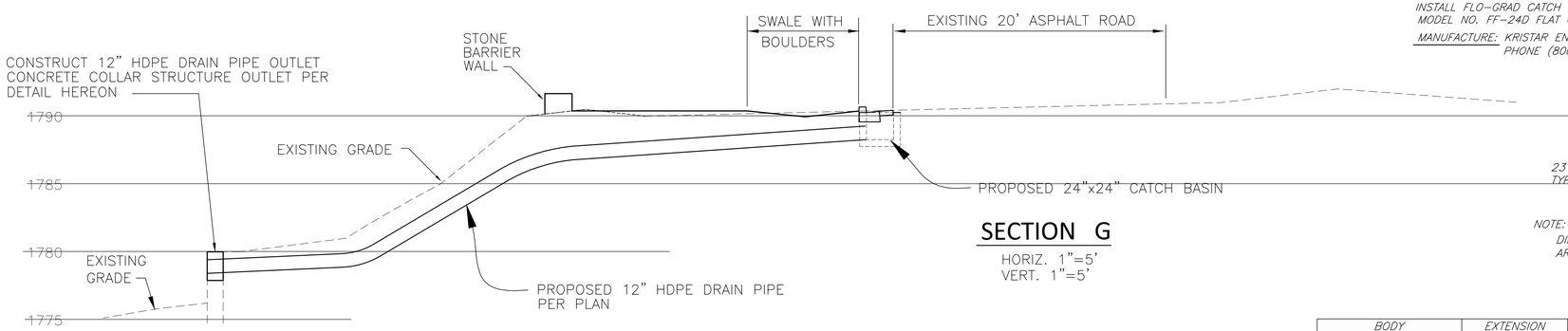

SECTION G

HORIZ. 1"=5'
VERT. 1"=5'

C.I. GRATE

STEEL PARKWAY GALV.
GRATE IS ALSO AVAILABLE.

C.I. FRAME

WEIGHT – 90 LBS.

EXTENSION

WEIGHT – SEE TABLE

NOTE:

HEAVY STEEL GRATE
INSTALL FLO-GRAD CATCH BASIN FILTER INSERT
MODEL NO. FF-24D FLAT GRATED INLET
MANUFACTURE: KRISTAR ENTERPRISE, INC., SANTA ROSA, CA.
PHONE (800) 579-8819

BODY

WEIGHT – SEE TABLE

23" DIA. THIN-WALL KNOCKOUTS
TYPICAL ON ALL FOUR WALLS

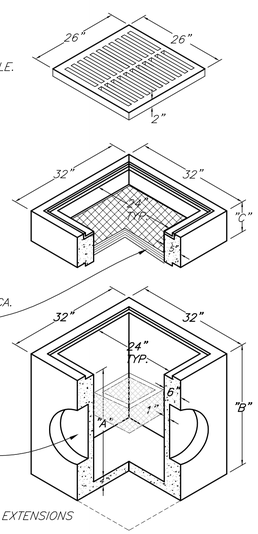

NOTE:
DIFFERENT HEIGHT BODIES AND EXTENSIONS ARE AVAILABLE ON REQUEST.

BODY			EXTENSION	
A	B	WEIGHT	C	WEIGHT
30"	34"	1050 LBS.	6"	230 LBS.
36"	40"	1290 LBS.	12"	470 LBS.
42"	46"	1520 LBS.	18"	700 LBS.
48"	52"	1750 LBS.	24"	930 LBS.

MANUFACTER

BROOKS PRODUCTS
DRAWING NO. CB-1212
13600 S. WAYSIDE DR.
HOUSTON, TX 77048
PHONE: (713) 991-2400
FAX: (713) 991-0815

SPECIFICATIONS

CONCRETE: CONCRETE HAS A DESIGN STRENGTH OF 5500 PSI AT 28 DAYS.
LOADING: DESIGNED FOR H-20 LOADING.
REINFORCEMENT: ASTM A-615 GRADE 60
C.I. CASTING: ASTM A 48 CLASS 30/35

BROOK 24" X 24" CATCH BASIN

E

NO SCALE

NO.	DATE	REVISION

CALCIVIC ENGINEERING GROUP
CIVIL / STRUCTURAL / LAND SURVEYORS
CONSULTING ENGINEERS & LAND SURVEYORS
2160 PARKHILL WAY, ALTADENA, CALIFORNIA 91001
TEL (626) 798-2828 FAX(626) 798-6944
E-MAIL calcivic@earthlink.net

SECTION AND DETAILS

OAKS STAIRWAY & OVERLOOK
EAST FORK, SAN GABRIEL RIVER

CHECKED BY: I.C.
DRAWN BY: K.H.
PLAN SCALE: AS SHOWN
DATE: 04/27/23
JOB NO.: 042723
SHEET NO.: C-3.02
OF 6 SHTS

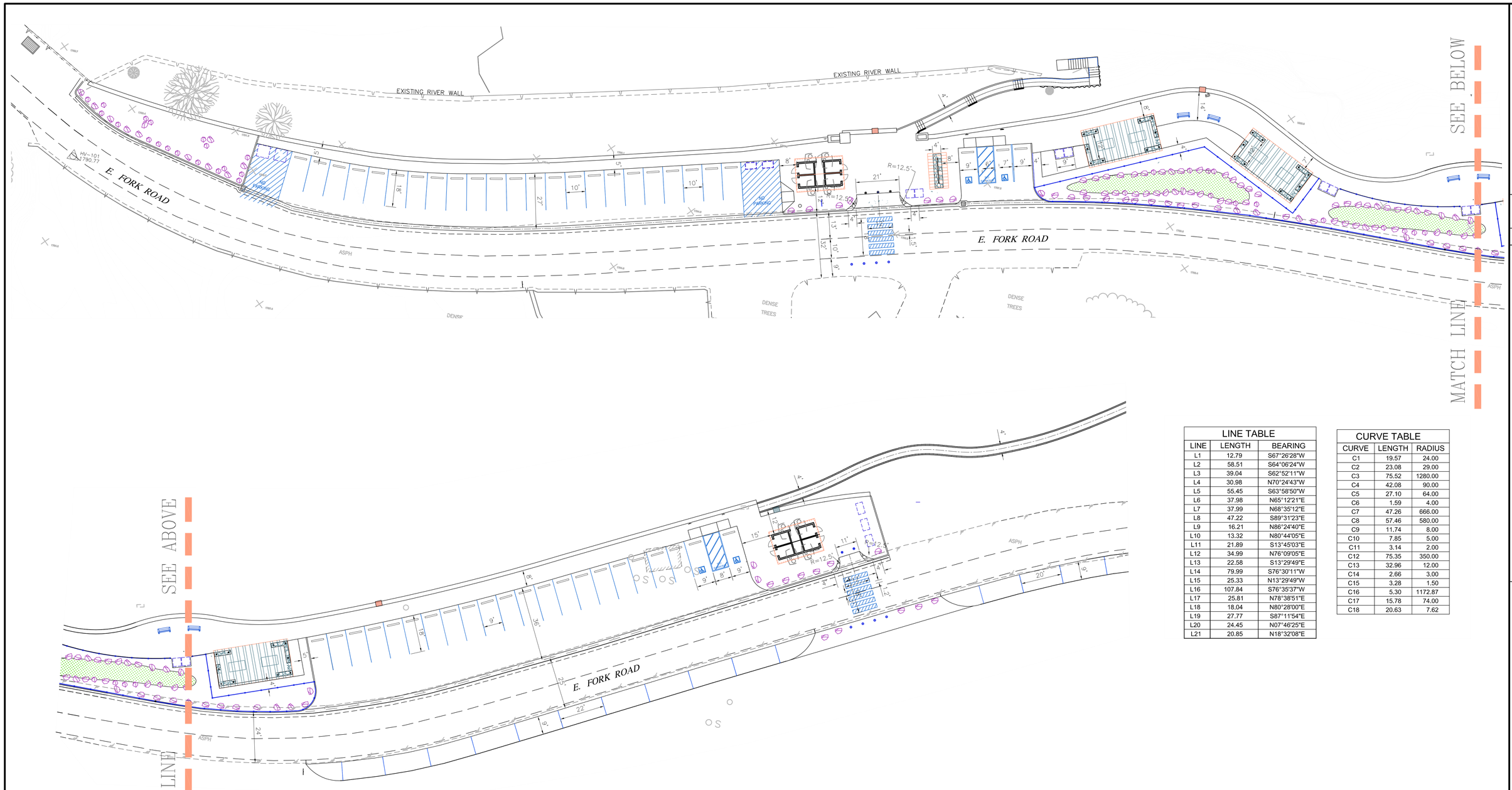

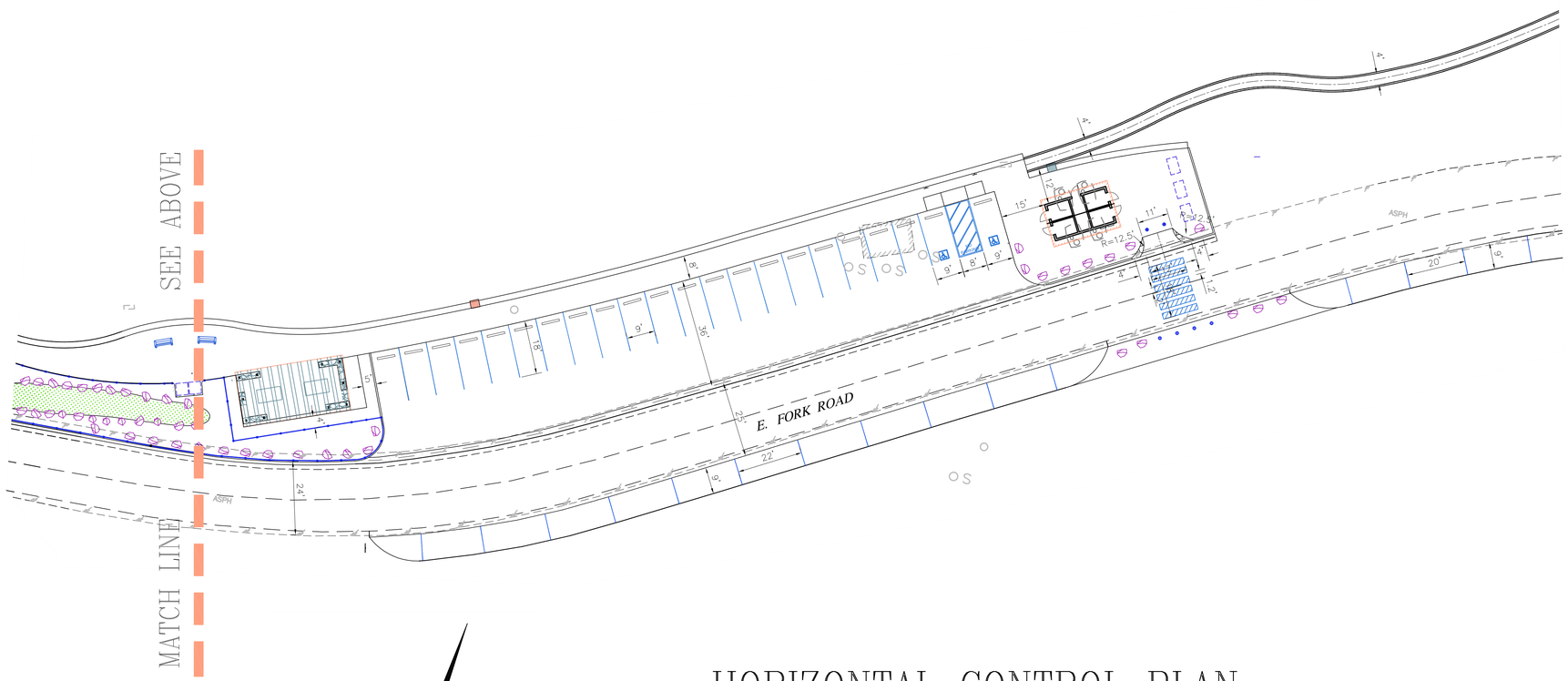

LINE TABLE		
LINE	LENGTH	BEARING
L1	12.79	S67°26'28"W
L2	58.51	S64°06'24"W
L3	39.04	S62°52'11"W
L4	30.98	N70°24'43"W
L5	55.45	S63°58'50"W
L6	37.98	N65°12'21"E
L7	37.99	N68°35'12"E
L8	47.22	S89°31'23"E
L9	16.21	N86°24'40"E
L10	13.32	N80°44'05"E
L11	21.89	S13°45'03"E
L12	34.99	N76°09'05"E
L13	22.58	S13°29'49"W
L14	79.99	S76°30'11"W
L15	25.33	N13°29'49"W
L16	107.84	S76°35'37"W
L17	25.81	N78°38'51"E
L18	18.04	N80°28'00"E
L19	27.77	S87°11'54"E
L20	24.45	N07°46'25"E
L21	20.85	N18°32'08"E

CURVE TABLE		
CURVE	LENGTH	RADIUS
C1	19.57	24.00
C2	23.08	29.00
C3	75.52	1280.00
C4	42.08	90.00
C5	27.10	64.00
C6	1.59	4.00
C7	47.26	666.00
C8	57.46	580.00
C9	11.74	8.00
C10	7.85	5.00
C11	3.14	2.00
C12	75.35	350.00
C13	32.96	12.00
C14	2.66	3.00
C15	3.28	1.50
C16	5.30	1172.87
C17	15.78	74.00
C18	20.63	7.62

HORIZONTAL CONTROL PLAN

20 0 20 40
GRAPHIC SCALE
SCALE : 1"=20'

REGISTERED PROFESSIONAL ENGINEER
IVAN W. K. CHIU
No. C44672
EXP. 03/31/2026
CIVIL
STATE OF CALIFORNIA

NO.	DATE	REVISION

CALCIVIC ENGINEERING GROUP
CONSULTING ENGINEERS & LAND SURVEYORS
CIVIL / STRUCTURAL / LAND SURVEYING
2160 PASADENA WAY, ALTADENA, CALIFORNIA 91001
TEL (626) 798-2828 FAX(626) 798-6944
E-MAIL calcivic@earthlink.net

HORIZONTAL CONTROL PLAN

OAKS STAIRWAY & OVERLOOK
EAST FORK, SAN GABRIEL RIVER

CHECKED BY I.C.
DRAWN BY K.H.
PLAN SCALE 1" = 20'
DATE 04/27/23
JOB NO. 042723
SHEET NO. C4 OF 6 SHTS

C:\Projects\Projects (Structural)\City\Street Address\Plan.dwg
07/01/01 04 : 30 : 2000

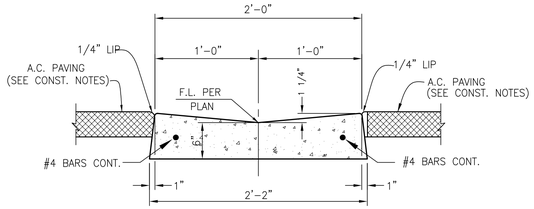

CONC. GUTTER DETAIL (A)

NO SCALE

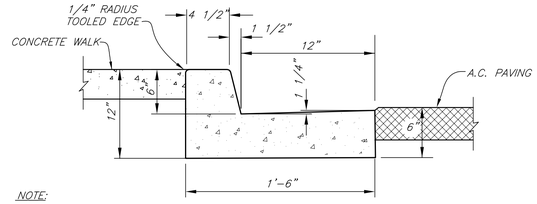

NOTE:

1. JOINTS AT 25' O.C. MAX. AND AT CURVES, TANGENTS, AND CORNERS
2. BASE OF CURB TO REST ON COMPACTED FILL.

CONC. CURB AND GUTTER (C)

NO SCALE

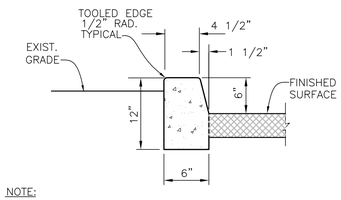

NOTE:

1. JOINTS AT 25' O.C. MAX. AND AT CURVES, TANGENTS, AND CORNERS
2. BASE OF CURB TO REST ON COMPACTED FILL.

6" CONCRETE CURB ONLY (B)

NO SCALE

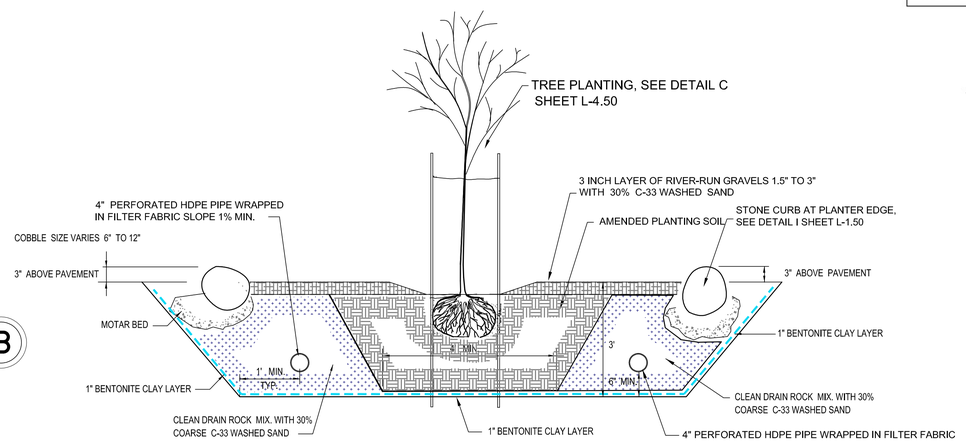

RAIN GARDEN (D)

NO SCALE

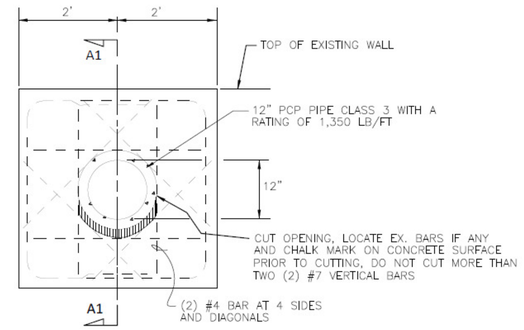

ELEVATION

NOTES:

1. BEND ALL CUT BARS INTO COLLAR
2. RETAIN ALL REINFORCEMENT THAT CLEARS PIPE AND IS 3" CLEAR OF OPENING
3. PIPE MAY BE CUT ON DIAGONAL IF POSITION AS SHOWN

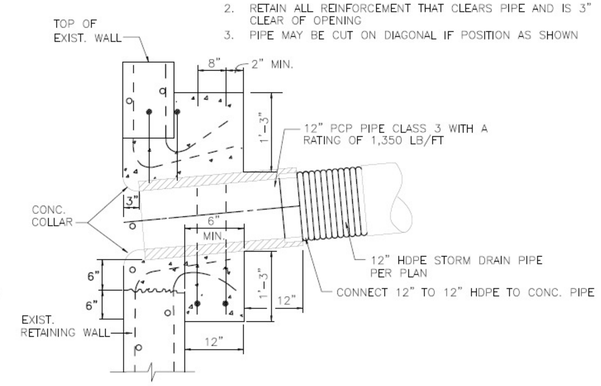

SECTION A1-A1

JUNCTION STRUCTURE WITH COLLAR AT CHANNEL WALL (E)

NOT TO SCALE

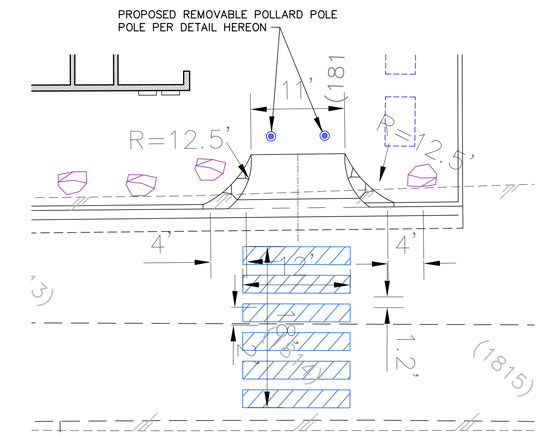

CURB/ENTRY RAMP & CROSSWALK ENTRANCE #2

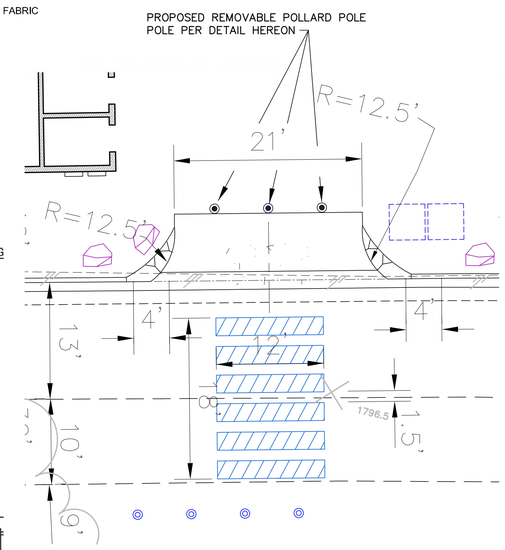

CURB/ENTRY RAMP & CROSSWALK ENTRANCE #1

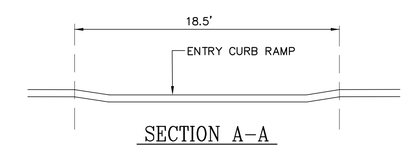

SECTION A–A

NO SCALE

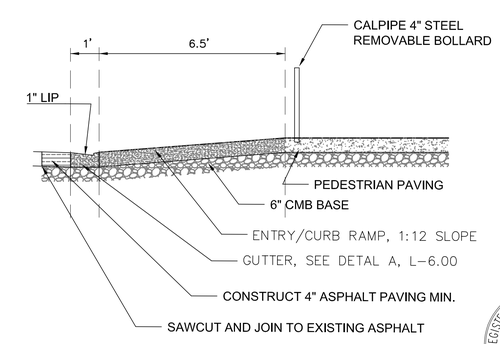

ENTRY CURB RAMP SECTIONS

NO SCALE

☐ SSF04040 SCH 40 STAINLESS STEEL
☐ SSF04080 SCH 80 STAINLESS STEEL
☒ IBF04040 SCH 40 ASTM A-53 CARBON STEEL
☐ IBF04080 SCH 80 ASTM A-53 CARBON STEEL

☑ SELECT DESIRED CARBON STEEL BOLLARD FINISH:
☐ POWDERCOAT RAL # _____
☐ AS SPECIFIED _____

☑ SELECT DESIRED BOLLARD CAP STYLE:
☐ DOME
☒ STANDARD FLAT
☐ VIKING
☐ KNIGHT

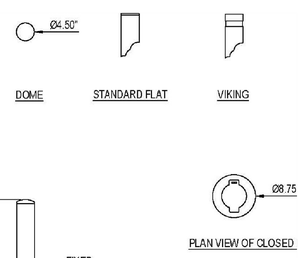

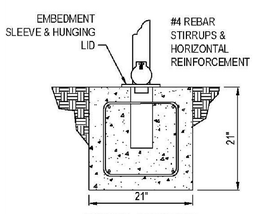

END VIEW - FOUNDATION

ELEVATION VIEW - FOUNDATION

NOTES:

1. INSTALLATION TO BE COMPLETED IN ACCORDANCE WITH MANUFACTURER'S SPECIFICATIONS.
2. DO NOT SCALE DRAWING.
3. THIS DRAWING IS INTENDED FOR USE BY ARCHITECTS, ENGINEERS, CONTRACTORS, CONSULTANTS AND DESIGN PROFESSIONAL FOR PLANNING PURPOSES ONLY. THIS DRAWING MAY NOT BE USED FOR CONSTRUCTION.
4. ALL INFORMATION CONTAINED HEREIN WAS CURRENT AT THE TIME OF DEVELOPMENT BUT MUST BE REVIEWED AND APPROVED I THE PRODUCT MANUFACTURER TO BE CONSIDERED ACCURATE.
5. CONTRACTOR'S NOTE: FOR PRODUCT AND COMPANY INFORMATION VISIT www.CADdetails.com/info AND ENTER REFERENCE NUMBER 2905-022.

1A CALPIPE REMOLABLE 4" STEEL BOLLARD

NO SCALE

☐ SSF04040 SCH 40 STAINLESS STEEL
☐ SSF04080 SCH 80 STAINLESS STEEL
☒ IBF04040 SCH 40 ASTM A-53 CARBON STEEL
☐ IBF04080 SCH 80 ASTM A-53 CARBON STEEL

☑ SELECT DESIRED CARBON STEEL BOLLARD FINISH:
☐ POWDERCOAT RAL # _____
☐ AS SPECIFIED _____

☑ SELECT DESIRED BOLLARD CAP STYLE:
☐ DOME
☒ STANDARD FLAT
☐ VIKING
☐ KNIGHT

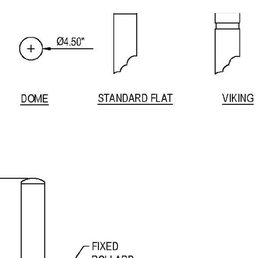

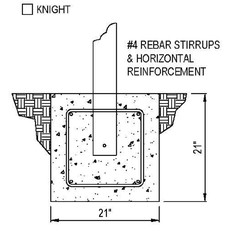

END VIEW - FOUNDATION

ELEVATION VIEW - FOUNDATION

NOTES:

1. INSTALLATION TO BE COMPLETED IN ACCORDANCE WITH MANUFACTURER'S SPECIFICATIONS.
2. DO NOT SCALE DRAWING.
3. THIS DRAWING IS INTENDED FOR USE BY ARCHITECTS, ENGINEERS, CONTRACTORS, CONSULTANTS AND DESIGN FOR PLANNING PURPOSES ONLY. THIS DRAWING MAY NOT BE USED FOR CONSTRUCTION.
4. ALL INFORMATION CONTAINED HEREIN WAS CURRENT AT THE TIME OF DEVELOPMENT BUT MUST BE REVIEWED A THE PRODUCT MANUFACTURER TO BE CONSIDERED ACCURATE.
5. CONTRACTOR'S NOTE: FOR PRODUCT AND COMPANY INFORMATION VISIT www.CADdetails.com/info AND ENTER REFERENCE NUMBER 2905-015.

2A CALPIPE FIXED 4" STEEL BOLLARD

NO SCALE

NO.	DATE	REVISION

CALCIVIC ENGINEERING GROUP
CONSULTING ENGINEERS & LAND SURVEYORS
CIVIL / STRUCTURAL / LAND SURVEYING
2160 PARKHILL WAY, ALTADENA, CALIFORNIA 91001
TEL (626) 798-2023 FAX(626) 798-6844
E-MAIL calcivic@earthlink.net

GRADING PLAN

OAKS STAIRWAY & OVERLOOK
EAST FORK, SAN GABRIEL RIVER

CHECKED BY: I.C.
DRAWN BY: K.H.
PLAN SCALE: 1" = 16'
DATE: 04/27/23
JOB NO. 042723

REGISTERED PROFESSIONAL ENGINEER
IVAN W. K. CHU
No. C44672
EXP. 03/31/2026
CIVIL
STATE OF CALIFORNIA

SHEET NO. C5 OF 6 SHTS

C:\Projects\Projects (Structural)\City\Street Address\Plan.dwg
07:01:01 04 / 30 / 2000

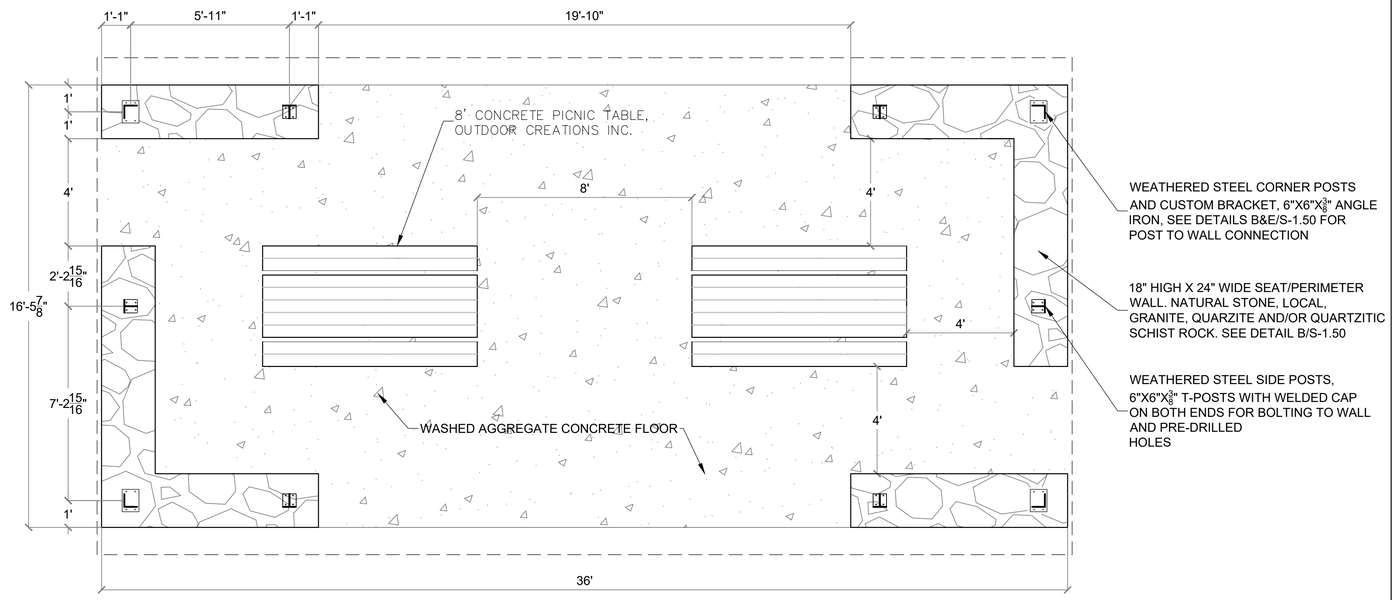

A SHADE TRELLIS A - FLOOR PLAN
SCALE: 3/8"=1'

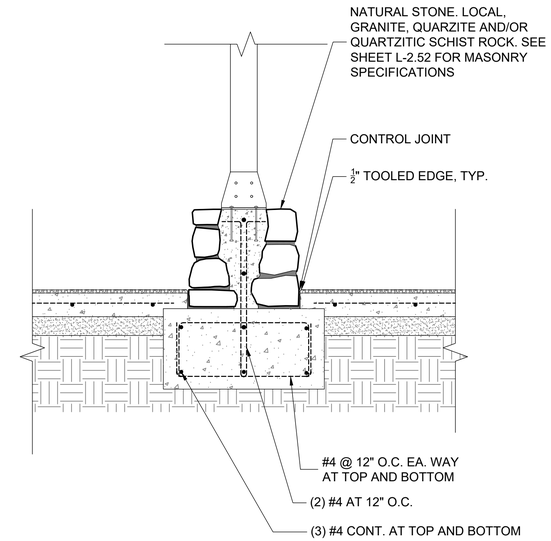

B MASONRY WALL AND FOUNDATION
SCALE: 3/4" = 1'

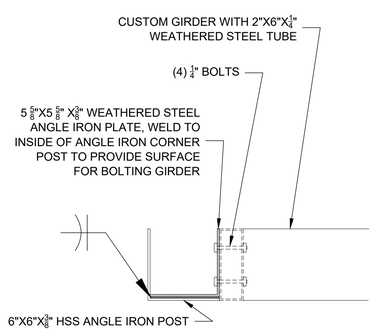

CROSS SECTION A-A, NTS

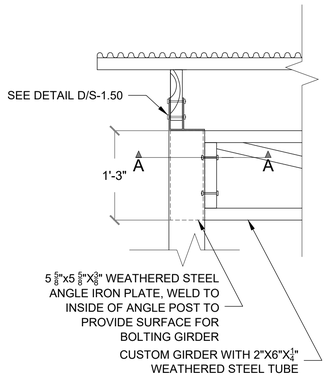

C CORNER POST-GIRDER CONNECTION
Scale: 1" = 1'

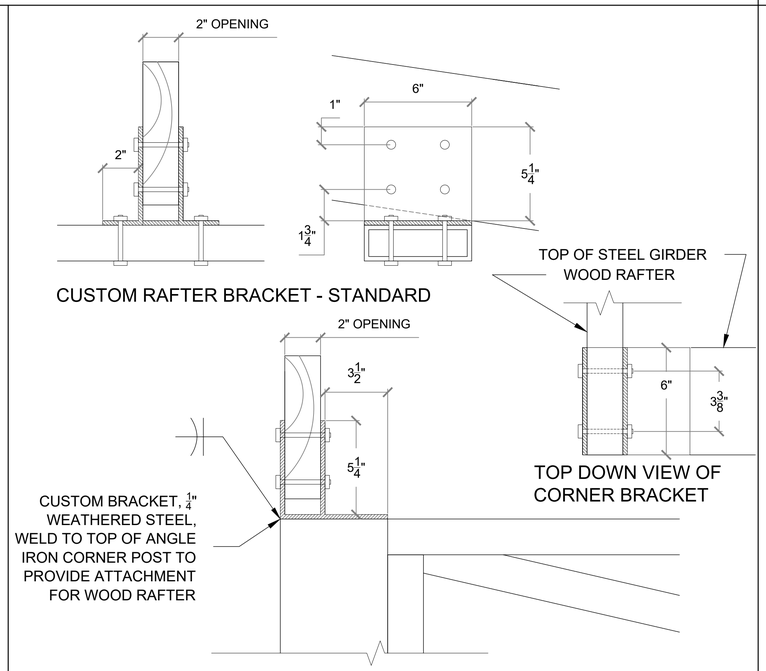

D GIRDER/RAFTER ATTACHMENTS
Scale:

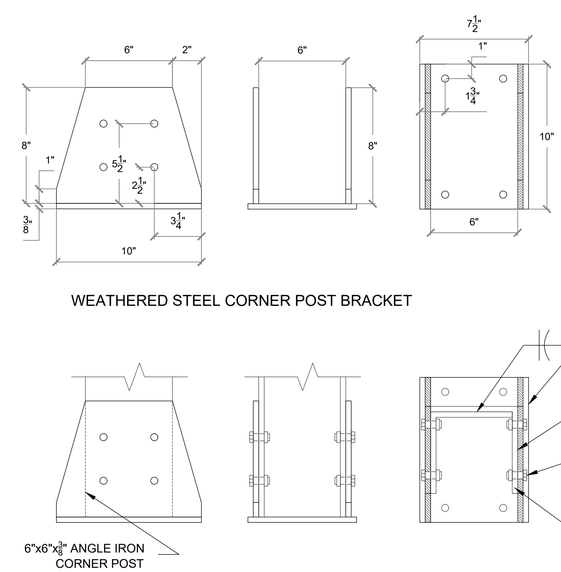

E POST TO MASONRY WALL CONNECTION
SCALE: NTS

REVISIONS	DATE

WATERSHED CONSERVATION AUTHORITY
100 N OLD SAN GABRIEL CANYON ROAD
AZUSA, CA 91702
PHONE: (626) 815-1019

Lynne Dwyer
Landscape Architect
2616 NORTH FIGUEROA, SUITE A
LOS ANGELES, CA 90065
(323) 221-9500

SHEET TITLE
SHADE TRELLIS & KIOSK DETAILS

PROJECT TITLE
OAKS STAIRWAY & OVERLOOK
EAST FORK, SAN GABRIEL RIVER

LICENSED LANDSCAPE ARCHITECT
LYNNE DWYER
Signature
5/31/2027
Renewal Date
LICENSE NO. 5657
STATE OF CALIFORNIA

DRAWN BY:	KT
CHECKED BY:	LD
PROJECT NO.	OS2019
DATE:	DECEMBER 1 2025

S-1.50

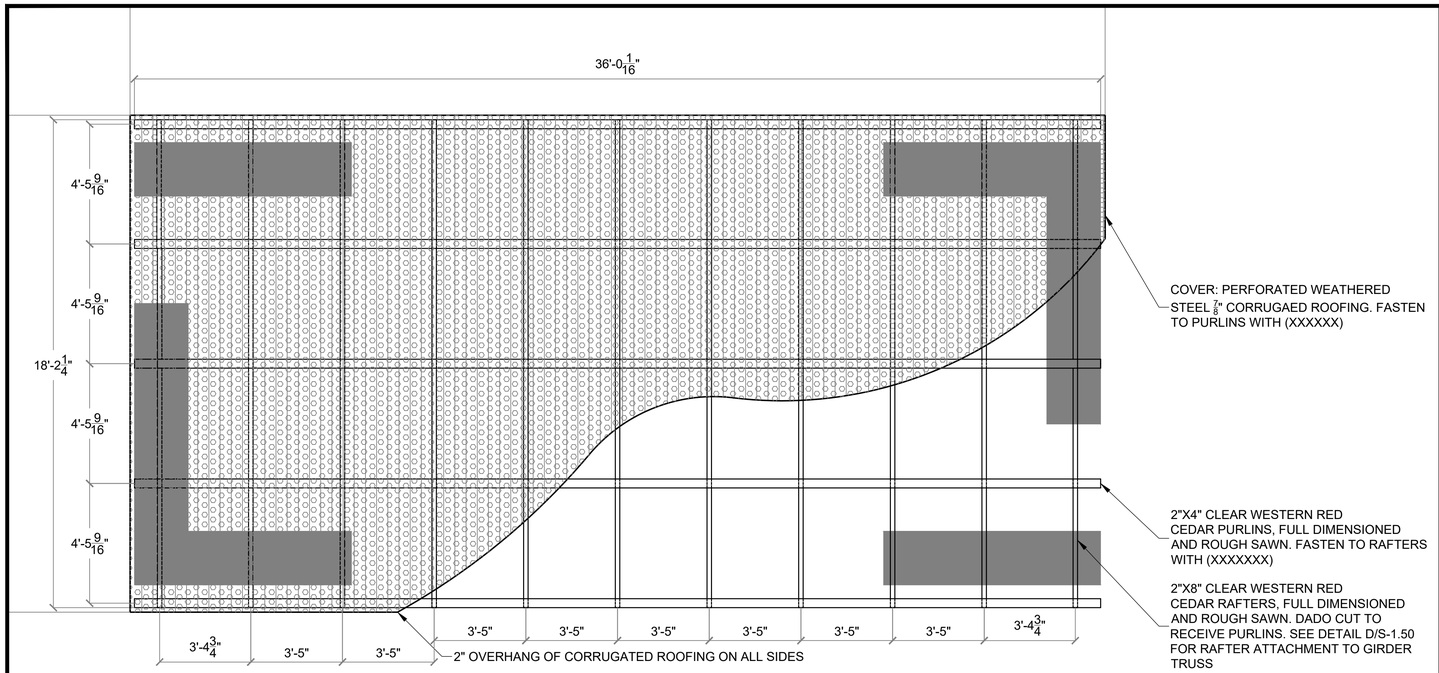

A SHADE TRELLIS A - ROOF
SCALE: 3/8"=1'

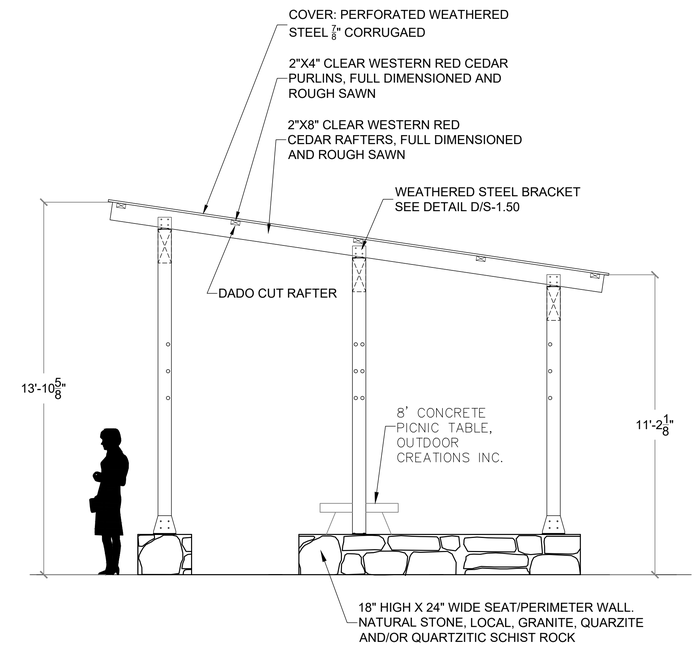

B SHADE TRELLIS A - SIDE VIEW
SCALE: 3/8"=1'

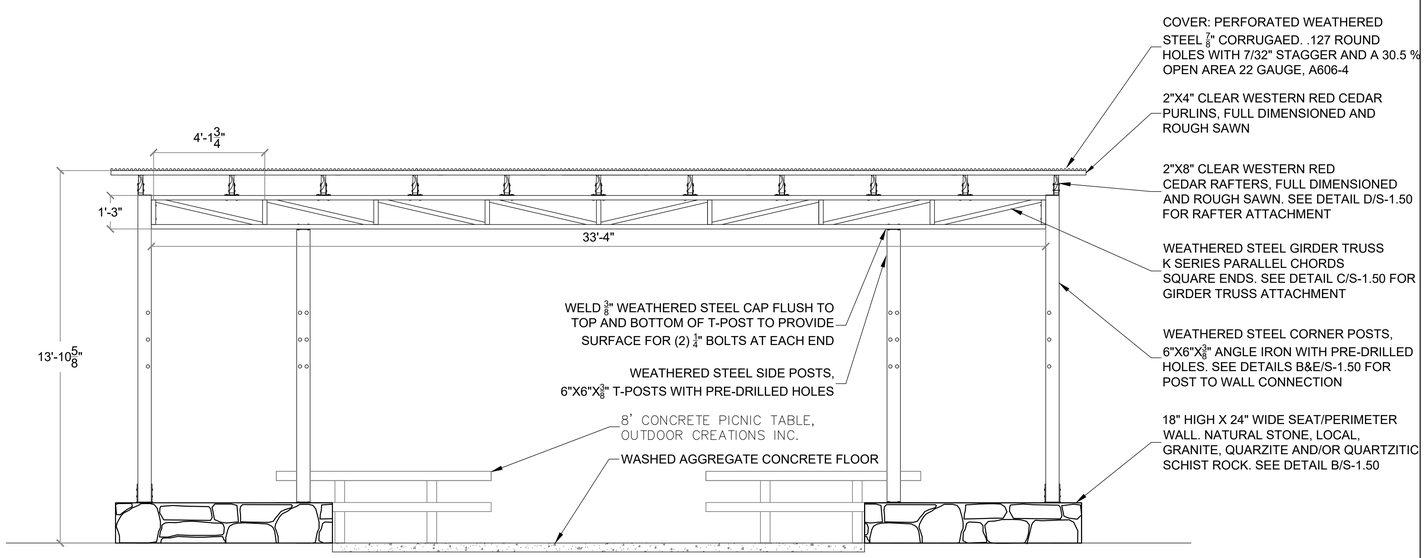

C SHADE TRELLIS A - FRONT VIEW
SCALE: 3/8"=1'

REVISIONS	DATE

WATERSHED CONSERVATION AUTHORITY
100 N OLD SAN GABRIEL CANYON ROAD
AZUSA, CA 91702
PHONE: (626) 815-1019

Lynne Dwyer
Landscape Architect
2616 NORTH FIGUEROA, SUITE A
LOS ANGELES, CA 90065
(323) 221-9500

SHEET TITLE
SHADE TRELLIS & KIOSK DETAILS

PROJECT TITLE
OAKS STAIRWAY & OVERLOOK
EAST FORK, SAN GABREL RIVER

LICENSED LANDSCAPE ARCHITECT
LYNNE DWYER
Signature
5/31/2027
Renewal Date
LICENSE NO. 3497
STATE OF CALIFORNIA

DRAWN BY:	KT
CHECKED BY:	LD
PROJECT NO.	OS2019
DATE:	DECEMBER 1 2025

S-1.51

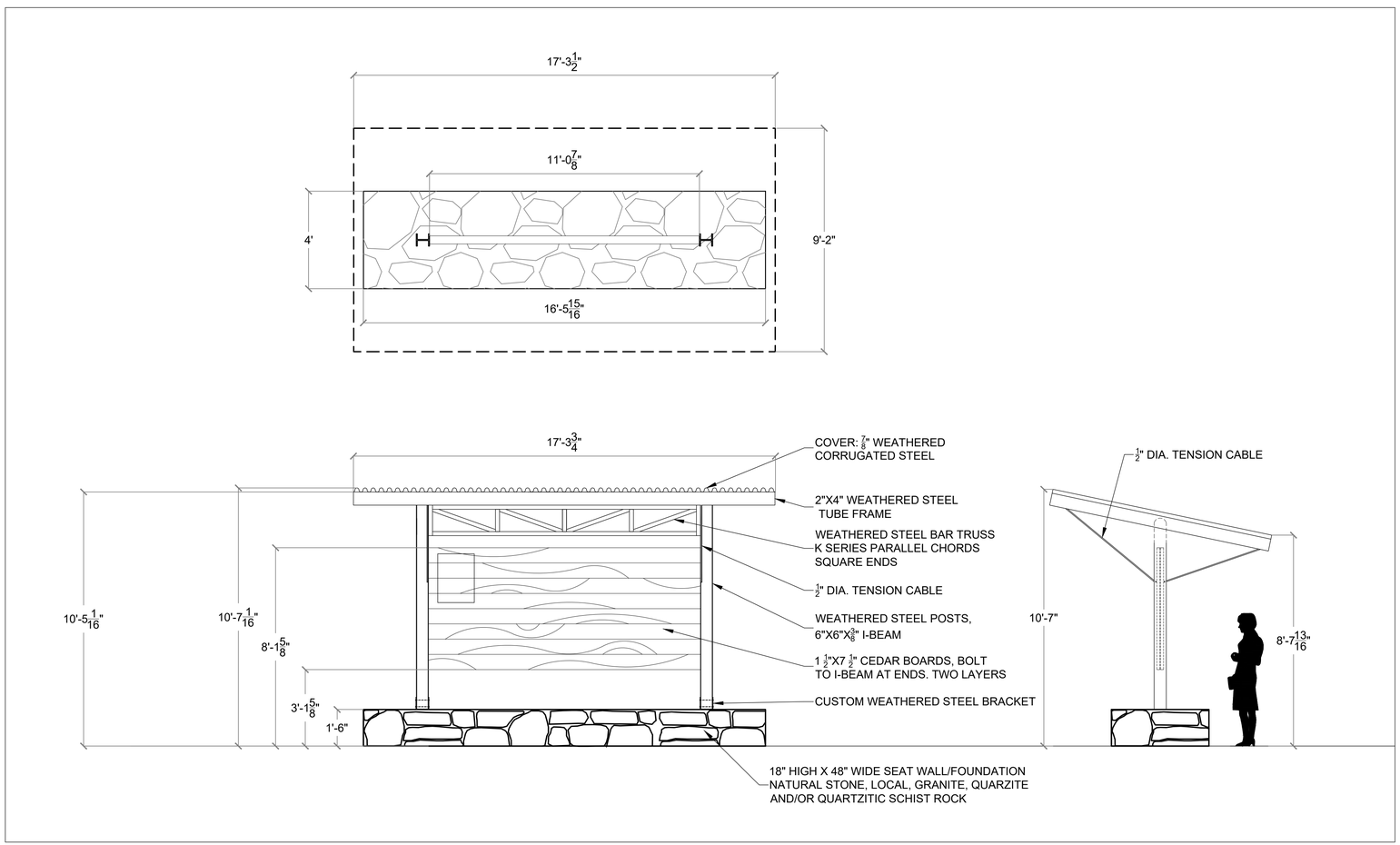

E KIOSK
Scale: 3/8" = 1'

REVISIONS	DATE

WATERSHED CONSERVATION AUTHORITY
100 N OLD SAN GABRIEL CANYON ROAD
AZUSA, CA 91702
PHONE: (626) 815-1019

Lynne Dwyer
Landscape Architect
2616 NORTH FIGUEROA, SUITE A
LOS ANGELES, CA 90065
(323) 221-9500

SHEET TITLE

SHADE TRELLIS & KIOSK DETAILS

PROJECT TITLE

OAKS STAIRWAY & OVERLOOK
EAST FORK, SAN GABRIEL RIVER

LICENSED LANDSCAPE ARCHITECT
LYNNE DWYER
Signature
5/31/2027
Renewal Date
LICENSE NO. 5697
STATE OF CALIFORNIA

DRAWN BY:	KT
CHECKED BY:	LD
PROJECT NO.	OS2019
DATE:	DECEMBER 1 2025

S-1.52

DETAIL OR SECTION
SHEET WHERE DRAWN

F1 TYPICAL DETAIL ON TYPICAL DETAIL SHEET

FOR BALANCE OF SECTION OR DETAIL IN THE POINTER DIRECTION SEE NOTED SECTION

POINTER INDICATES SECTION OR DETAIL TO REFER TO FOR ITEMS NOT NOTED

REFERENCE NOTE, REFER TO PLAN NOTE INDICATED

TOP OF FOOTING

BOTTOM OF FOOTING OR GRADE BEAM

ELEVATION (AT LEVEL PLANE)

ELEVATION (AT SLOPING PLANE)

S INDICATES STEPPED FOOTING

MASONRY IN PLAN OR SECTION

SLOPE DECK OR SLAB

PRECAST CONCRETE IN SECTION. NOTED "PC"

NEW CONCRETE IN SECTION

WOOD BLOCKING IN SECTION

CONTINUOUS WOOD MEMBER IN SECTION

AB	ANCHOR BOLT
BOC	BOTTOM OF CONCRETE
BOD	BOTTOM OF DECK
CJ	CONTROL JOINT
CL	CENTER LINE
CLR	CLEAR
CMU	CONCRETE MASONRY UNIT
DWL	DOWEL
EF	EACH FACE
EL	ELEVATION
EOD	EDGE OF DECK
EW	EACH WAY
(E)	EXISTING
FOS	FACE OF STUD
FOW	FACE OF WALL
GR	GRADE
HS	HIGH STRENGTH
(N)	NEW
PL	PLATE
PT	PRESSURE TREATED
OPP HD	OPPOSITE HAND
REF	REFERENCE
SMS	SHEET METAL SCREWS
SOG	SLAB ON GRADE
SS	SELECT STRUCTURAL
STST	SELF-TAPPING, SELF-THREADING SCREWS
TOC	TOP OF CONCRETE
TOD	TOP OF DECK
TOP	TOP OF PLYWOOD
TOS	TOP OF STEEL
TOW	TOP OF WALL
TYP	TYPICAL
UNO	UNLESS NOTED OTHERWISE

STANDARD SYMBOLS AND NOTATION

STEEL DECK

1. STEEL DECKING SHALL BE BY AS INDICATED ON PLANS.
2. DECKING AND CLOSURE PLATES SHALL BE GALVANIZED STEEL SHEET OF ASTM A653 GRADE 33. GALVANIZATION SHALL COMPLY WITH ASTM A924.
3. REFER TO PLANS FOR DECK TYPE, GAGE AND WELDING.
4. DECKING SHALL BE CONTINUOUS FOR 3 SPANS MINIMUM WHEREVER POSSIBLE UNLESS NOTED OTHERWISE ON PLANS.
5. DECK CONTRACTOR SHALL PROVIDE AND WELD INTO POSITION CLOSURE PLATES AT DECK EDGES AS WELL AS NECESSARY FLASHING AROUND COLUMNS AND AT OPENINGS RESULTING FROM CHANGE OF DECK SPAN DIRECTION. REINFORCE ALL CANTILEVER DECK EDGES AS REQUIRED TO SUPPORT CONSTRUCTION LOADS.
6. WHERE DECK DOES NOT BEAR SQUARELY ON SUPPORTING MEMBER, PROVIDE SHIM PLATE OR WELD WASHER AS REQUIRED TO PLACE THE FASTENERS.
7. WHEN DECK SHEETS RUN PARALLEL TO A BUILDING PERIMETER THE FIRST SHEET ALONG THAT PERIMETER SHALL BE A FULL-WIDTH SHEET.

CONCRETE

1. ALL CONCRETE WORK SHALL CONFORM TO ACI STANDARD 318 FOR REINFORCED CONCRETE AND CBC CHAPTER 19A.
2. DESIGN MIXES SHALL BE PER ACI 318 26.4.2.
3. CONCRETE SHALL BE NORMAL WEIGHT CONCRETE WITH AN ULTIMATE 28-DAY COMPRESSIVE STRENGTH OF AT LEAST 3,000 PSI AND SHALL BE MADE WITH TYPE I OR II CEMENT
4. ALL CONCRETE SHALL BE MADE TO WITHSTAND DETERIORATION FROM EXPOSURE IN ACCORDANCE WITH 2016 CBC CHAPTER 1904A AND ACI 318.14 CHAPTER 19.3. MIX DESIGNS PREPARED SHALL STATE THE COMPLIANCE WITH THE CLASS AS REQUIRED BY THE TABLE BELOW.

CONCRETE EXPOSURE		
PART OR PORTION OF WORK	EXPOSURE TYPE	CLASS
FOUNDATION CONCRETE	S	SO
SLAB ON GRADE NOT PROTECTED BY MOISTURE BARRIER	S	SO
SLAB ON GRADE PROTECTED BY MOISTURE BARRIER	C	CO
CONCRETE SLABS, BEAMS WITHIN BUILDING ENVELOPE	C	CO

5. OLERANCES FOR CONCRETE WORK AND PLACEMENT OF BARS SHALL BE IN ACCORDANCE WITH ACI 117.
6. KEY AND DOWEL POUR JOINTS AS SHOWN ON THE STRUCTURAL DRAWINGS ONLY UNLESS NOTED OTHERWISE.
7. SET SCREEDS TO COMPENSATE FOR FORM AND SUPPORT SETTLEMENT.
8. NO PIPES, DUCTS OR CONDUITS SHALL BE EMBEDDED IN STRUCTURAL MEMBERS EXCEPT AS SHOWN ON THE STRUCTURAL DRAWINGS.
9. PROVIDE CONSTRUCTION JOINTS ONLY WHERE INDICATED ON THE DRAWINGS. ADDITIONAL CONSTRUCTION JOINTS MAY BE APPROVED IF PLANS AND DETAILS ARE SUBMITTED BY THE CONTRACTOR TO THE ARCHITECT FOR APPROVAL.
10. REFER TO SPECIFICATIONS SECTION 03 3000 FOR TOLERANCES, FLOOR FLATNESS AND LEVELNESS.

REINFORCEMENT

1. ALL REINFORCING BARS SHALL CONFORM TO ACI 318-14 20.2 AND ASTM A615 GRADE 60.
2. WELDED WIRE FABRIC SHALL CONFORM TO ACI 318 3.5.3.5, 3.5.3.6, 3.5.3.7 AND ASTM A185.
3. ALL REINFORCING SHALL BE ACCURATELY PLACED AND FIRMLY SUPPORTED AS REQUIRED BY THE ACI STANDARDS. REINFORCING SHALL HAVE THE FOLLOWING MINIMUM COVERAGE AND SHALL BE PLACED AS NEAR TO THE CONCRETE SURFACE AS THESE MINIMUMS WILL PERMIT UNLESS NOTED OR DETAILED OTHERWISE.
   CONCRETE POURING AGAINST EARTH ..... 3"
   FORMED CONCRETE IN CONTACT WITH EARTH OR WEATHER ..... 2"
   SLABS, WALLS, JOISTS ..... 3/4"
4. SPLICE BARS AS SHOWN ON STRUCTURAL DRAWINGS ONLY. REFER TO TYPICAL DETAILS FOR MINIMUM LAP LENGTH.
5. BARS INTERRUPTED BY STRUCTURAL STEEL SHALL EXTEND TO WITHIN 1" OF THE STRUCTURAL STEEL FLANGE OR WEB AND HAVE A 90 DEGREE HOOK UNLESS NOTED OTHERWISE.
6. REINFORCING BARS SHALL NOT BE WELDED EXCEPT WHERE SHOWN ON THE DRAWINGS. WHERE REINFORCING BARS ARE INDICATED TO BE WELDED THEY SHALL BE OF WELDABLE MATERIAL ASTM A706 AND WELDED PER AWS D1.4. WELDING RODS SHALL BE LOW HYDROGEN E-90 ELECTRODES.

STRUCTURAL STEEL

1. ALL STRUCTURAL STEEL SHALL BE FABRICATED AND ERECTED IN ACCORDANCE WITH THE LATEST EDITION OF THE AISC SPECIFICATIONS AND CHAPTER 22A OF THE CBC.
2. FABRICATOR SHALL BE LICENSED BY THE LOCAL BUILDING DEPARTMENT FOR THE WORK INDICATED.
3. ALL STRUCTURAL STEEL SHALL CONFORM TO ASTM A-36 EXCEPT AS FOLLOWS:
   WIDE FLANGE SHAPES ..... CORETEN STEEL ASTM A588 (Fy=50 ksi)
   HOLLOW STRUCTURAL SECTIONS (HSS):
   SQUARE AND RECTANGULAR ..... CORETEN STEEL ASTM A588 (Fy=50 ksi)
   PLATES AND BARS ..... CORETEN STEEL (ASTM A588 (Fy=50 ksi)
4. FABRICATOR SHALL VERIFY ALL DIMENSIONS WITH ARCHITECTURAL AND STRUCTURAL DRAWINGS.
5. FABRICATE BEAM ELEMENTS WITH NATURAL CAMBER UP.
6. ALL BOLTS SHALL BE ASTM F3125 GROUP A (A325-N) HIGH STRENGTH (H.S.) BOLTS INSTALLED AND TESTED IN ACCORDANCE WITH CBC 2213A.1. ANCHOR RODS AND BOLTS INTO CONCRETE OR MASONRY SHALL CONFORM TO ASTM F-1554. MACHINE BOLTS (M.B.) WHERE SPECIFIED, SHALL CONFORM TO ASTM A307. BOLTS HOLES SHALL BE NO MORE THAN 1/16 INCH GREATER THAN THE BOLT DIAMETER, EXCEPT BASE PLATE ANCHOR BOLT HOLES MAY BE DRILLED TO A DIAMETER NOT TO EXCEED THOSE LISTED IN AISC SPECIFICATIONS TABLE J3.3 FOR 'OVERSIZED' HOLES. WHERE HOLE SIZE IS EXCEEDED PROVIDE A 1/4"x3"x3" WELD WASHER WITH 1/4" FILLET WELD ALL AROUND.
7. WELDING SHALL CONFORM TO THE LATEST EDITION OF AWS D1.1 SPECIFICATIONS AND CBC CHAPTER 22A. WELDING ELECTRODES SHALL BE E-70XX. WELDERS SHALL BE CERTIFIED.
8. WELD SIZES INDICATED ARE MINIMUM REQUIRED FOR STRESS, CHECK WITH AISC SPECIFICATIONS TABLE J2.4 FOR OTHER REQUIREMENTS.
9. ALL BASE PLATES BEARING ON CONCRETE OR MASONRY SHALL BEAR ON MINIMUM 1.5 INCHES OF NON-METALLIC NON-SHRINK GROUT CONFORMING TO ASTM C1107 WITH A MINIMUM COMPRESSIVE STRENTH OF 6,000 PSI. THE GROUT SHALL BE POURED TO AT LEAST 1/16 INCH ABOVE THE BOTTOM OF BASE PLATE SURFACE.
10. ALL STRUCTURAL STEEL BELOW GRADE OR OTHERWISE ADJACENT TO EARTH OR GRAVEL SHALL HAVE A MINIMUM OF 4" CONCRETE COVER REINFORCED WITH MINIMUM #3 BARS AT 12" OC

ANCHOR BOLTS

1. BOLTS AND TREADED RODS ARE ASTM F-1554 GRADE 36 (UNO), BARS AND PLATES ARE ASTM A572 GRADE 50 MATERIAL.
2. NUTS AND WASHERS SHALL COMPLY WITH ASTM A563 AND F436, RESPECTIVELY. MATERIAL GRADE SHALL BE COMPATIBLE WITH ANCHOR MATERIAL.
3. PROVIDE BOLT GRIP AND PROJECTION AS REQUIRED.

GENERAL NOTES

INTENT OF DRAWINGS

1. THE STRUCTURAL DRAWINGS SHOW THE BASIC STRUCTURAL FRAME ONLY. REFER TO LANDSCAPE DRAWINGS AND OTHER CONTRACT DOCUMENTS FOR ITEMS NOT SHOWN SUCH AS NON-STRUCTURAL WALLS, CURBS, CEILINGS, FINISHES, SLAB DEPRESSIONS, WALL CHASES ETC., AS WELL AS DIMENSIONS AND ELEVATIONS NOT NOTED. WHERE SUCH ITEMS APPEAR ON THE STRUCTURAL DRAWINGS THE INTENT IS ONLY TO ALERT THE CONTRACTOR TO COORDINATE WITH OTHER DOCUMENTS.
2. REFER TO LANDSCAPE DRAWINGS AND OTHER CONTRACT DOCUMENTS FOR LOCATION AND DIMENSIONS OF ALL OPENINGS AND PENETRATION FOR MECHANICAL, ELECTRICAL AND PLUMBING TRADES THROUGH WALLS, FLOORS, AND ROOFS. FRAME OR REINFORCE OPENINGS PER THE TYPICAL DETAILS.
3. RESOLVE ANY CONFLICTS ON THE CONTRACT DOCUMENTS WITH THE LANDSCAPE BEFORE PROCEEDING WITH WORK.
4. TYPICAL DETAILS AND GENERAL NOTES ON SHEETS S-101 TO S-102 APPLY TO ALL PARTS OF THE JOB EXCEPT WHERE DETAILED OR NOTED OTHERWISE. EACH TYPICAL DETAIL HAS A UNIQUE NAME (W1, S1, ETC) AND ARE REFERENCED BY THEIR NAME ONLY WITHOUT REFERENCING DRAWING SHEET NUMBER.
5. VERIFY ALL DIMENSIONS AND CONDITIONS ON THE JOB.

CODE

1. ALL WORK SHALL COMPLY WITH THE 2016 CALIFORNIA BUILDING CODE (CBC) WHICH CONSISTS OF THE 2015 INTERNATIONAL BUILDING CODE AND THE CALIFORNIA CODE OF REGULATIONS (CCR) TITLE 24 PART 2 AMENDMENTS.

HORIZONTAL LOADS

1. WIND SPEED (ASCE 7-10 CHAPTER 29): Vult=115 MPH
   RISK CATEGORY (TABLE 1.5-1): II
   EXPOSURE: C
2. EARTHQUAKE PARAMETERS (PER GEOTECHNICAL REPORT):
   LATITUDE: 34.2299 N, LONGITUDE: 117.7780 W
   SITE CLASS: B
   SPECTRAL ACCELERATIONS $S_S = 2.834$, $S_1 = 0.976$
   SITE CLASS COEFFICIENT $F_a = 1.0$, $F_v = 1.0$
   DESIGN SPECTRAL ACCELERATIONS $S_{DS} = 1.889$, $S_{D1} = 0.651$
3. SEISMIC-BUILDING:
   SEISMIC DESIGN CATEGORY: E
   RESPONSE MODIFICATION FACTOR $C_s = 0.945$
   RESPONSE MODIFICATION FACTOR $R = 2.0$
   IMPORTANCE FACTOR $I = 1.0$
   OVERSTRENGTH FACTOR $\Omega = 2.0$, $C_d = 2.0$

SOIL

1. REFER TO GEOTECHNICAL REPORT BY:
   * GEOTEK, INC., PROJECT No. 2209-CR, DATED: OCTOBER 11,2016
   * LIMITED SUPPLEMENTAL GEOTECHNICAL EVALUATION, PROJECT No. 2209-CR, DATED: SEPTEMBER 11, 2019 AND ADDENDUM DATED OCTOBER 22, 2019
   * ADDENDUM TO LIMITED SUPPLEMENT GEOTECHNICAL EVALUATION, PROJECT No. 2209-CR, DATED: OCTOBER 22, 2019
2. SOIL TYPE IS BEDROCK.
3. DESIGN ALLOWABLE SOIL PRESSURE IS PER THE FOLLOWING TABLE:

ALLOW SOIL BEARING PRESSURES (PSF) *						
FOOTING	BASIC ALLOW (PSF)	MIN DEPT (IN)	MIN WIDTH (IN)	INCREASE PER ADDITIONAL FT DEPTH - WIDTH		MAXIMUM ALLOW (PSF)
FOOTING	3,000	12	12	1000	750	5,000

* ONE THIRD INCREASE OF ALLOWABLE SOIL PRESSURE IS ALLOWED FOR LOAD COMBINATIONS INCLUDING WIND OR SEISMIC LOADS.

4. FOOTINGS SHALL BEAR ON COMPACTED SOIL OR BEDROCK AND SHALL EXTEND AT LEAST 1'-0" BELOW FINISH GRADE OR FLOOR LINE, WHICHEVER IS LOWER.
5. REFER TO CIVIL DRAWINGS AND SOIL REPORT FOR EXCAVATIONS, GRADING AND COMPACTED FILL REQUIREMENTS.
6. FOUNDATIONS SHALL BE INSPECTED BY THE GEOTECHNICAL ENGINEER JUST PRIOR TO POURING CONCRETE, ENSURING THAT THEY ARE INTO SATISFACTORY SOIL, ARE OF PROPER DIMENSIONS AND ARE CLEAN AND FREE OF LOOSE SOIL.

REGISTERED PROFESSIONAL ENGINEER
FERNANDO S. COSTA
No. SE 2285
Exp. 3-31-21
STRUCTURAL
STATE OF CALIFORNIA

Costa & Associates
STRUCTURAL ENGINEERS
1543 W. GARVEY AVENUE NORTH #215
WEST COVINA, CA 91790
TEL: (626) 960-1811

JOB NO. 119023

DATE	REVISIONS

WATERSHED CONSERVATION AUTHORITY
100 N OLD SAN GABRIEL CANYON ROAD
AZUSA, CA 91702
PHONE: (626) 815-1019

BlueGreen
Open Space Planning & Design
2616 NORTH FIGUEROA, SUITE A
LOS ANGELES, CALIFORNIA 90065
(323) 221-9500

SHEET TITLE: GENERAL NOTES

PROJECT TITLE: OAKS STAIRWAY & OVERLOOK
EAST FORK, SAN GABRIEL RIVER

LICENSED LANDSCAPE ARCHITECT
LYNNE DWYER
5/31/2021
LICENSE NO. 2497

DRAWN BY:	PS
CHECKED BY:	OC
PROJECT NO.	OS2019
DATE:	DECEMBER 2019

S-101

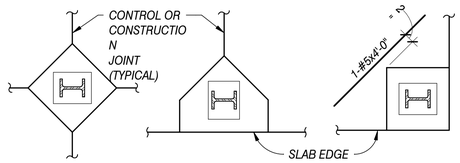

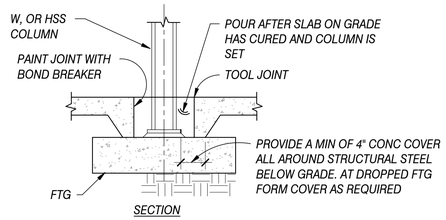

NOTE:
POCKET DIMENSIONS SHALL BE AS REQUIRED TO FIT THE COLUMN BASE PLATE AND BRACING WHERE OCCURS

SLAB ON GRADE JOINTING AT STEEL COLUMN

SG2

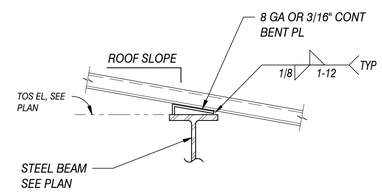

NOTE:
USE BENT PLATE WHEN DECK SLOPE RELATIVE TO ROOF BEAM FLANGE IS GREATER THAN 1/2:12.

TYPICAL DETAIL FOR LEVEL BEARING OF STEEL DECK

SD9

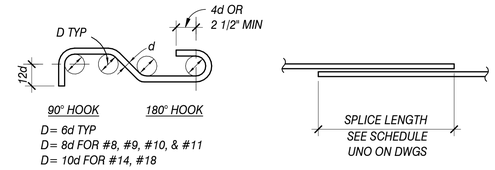

NOTES:

1. SPLICED BARS SHALL BE WIRED TOGETHER IN CONTACT. MAINTAIN LAPPED BARS IN SAME PLANE WITH RESPECT TO CONC SURFACE.
2. BARS IN NON-CONTACT LAP SPLICES SHALL BE SPACED NO FARTHER THAN 1/5 OF THE SPLICE LENGTH NOR 6 INCHES.
3. THE CLEAR DISTANCE BETWEEN BARS, INCLUDING BARS IN NON-CONTACT SPLICES & BARS ADJACENT TO SPLICES SHALL NOT BE LESS THAN 1.5 TIMES THE BAR DIAMETER NOR 1 1/2".
4. SPLICES ALLOWED ONLY WHERE INDICATED ON DRAWINGS.
5. TABLE IS PER ACI SECTION 12.2.2 FOR NORMAL WEIGHT CONCRETE IN CLASS-A SPLICES. LONGER LAPS MAY BE REQUIRED BY OTHER DETAILS.
6. INCREASE SCHEDULED LENGTHS BY 30% FOR BARS WITH MORE THAN 12 INCHES OF CONCRETE POUR BELOW (TOP BARS).
7. INCREASE SCHEDULED LENGTHS BY 33% FOR BARS IN LIGHTWEIGHT CONCRETE.
8. FOR MASONRY CONSTRUCTION USE A MINIMUM SPLICE LENGTH OF 48 BAR DIAMETERS EXCEPT USE 72 BAR DIAMETERS FOR ALL WALLS END, CORNER AND JAMB BARS.
9. MECHANICAL REBAR SPLICES MAY BE USED WITH WRITTEN APPROVAL BY THE STRUCTURAL ENGINEER. USE DAYTON SUPERIOR BAR-LOCK COUPLERS PER ICC ESR-2495 OR SIMILAR PRODUCTS HAVING ICC APPROVAL MAY BE USED. SPECIAL INSPECTION IS REQUIRED.

MIN BAR SPLICE AND DEVELOPMENT LENGTHS (IN INCHES)

GRADE 60 BAR	CONCRETE STRENGTH			MASONRY	
	3.0 KSI	4.0 KSI	5.0 KSI	(48dia)	(72dia)
# 3	25	21	19	18	27
# 4	33	29	26	24	36
# 5	41	36	32	30	45
# 6	50	43	38	36	54
# 7	72	62	56	42	63
# 8	82	71	64	48	72
# 9	92	80	72	54	81
# 10	104	90	81	---	---
# 11	116	100	90	---	---
# 14	139	120	108	---	---
# 18	185	160	144	---	---

TYPICAL REINFORCING BAR DETAILS

R1

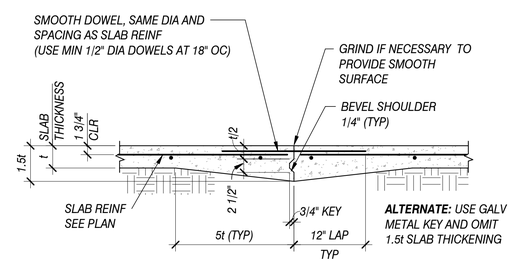

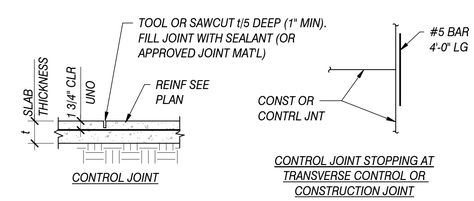

NOTES:

1. UNO ON PLAN PROVIDE CONTROL OR CONSTRUCTION JOINTS TO DIVIDE SLAB INTO APPROXIMATELY 20'x20' SECTIONS WITHOUT RE-ENTRANT CORNER. WHERE JOINTS ARE NOT SHOWN ON PLANS SUBMIT SHOP DWGS INDICATING ALL JOINTS FOR APPROVAL.
2. COORDINATE JOINTS WITH COLUMN CENTER LINES, REFER TO TYP DETAILS FOR JOINTING AT COLUMNS.
3. SAWCUTTING OF CONTROL JOINT SHALL BE COMPLETED WITHIN 24 HOURS OF THE CONCRETE POUR.
4. FOR SIZE AND SPACING OF JOINTS IN EXTERIOR SLABS AND PAVEMENTS, REFER TO ARCHITECTURAL DRAWINGS.

TYPICAL JOINT FOR SLAB ON GRADE

SG1

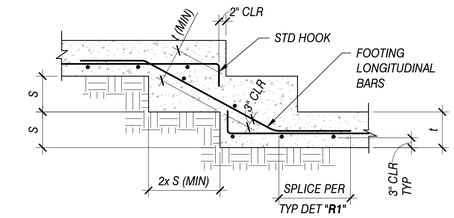

NOTES:

1. S = 1'-6" MAX
2. FOUNDATION PLAN SHOWS APPROXIMATE LOCATIONS OF THE MINIMUM STEPS REQUIRED BY THE STRUCTURAL DESIGN. ACTUAL LOCATIONS SHALL BE DETERMINED BY THE CONTRACTOR AS REQUIRED TO MEET FIELD CONDITIONS AND ALL PROJECT REQUIREMENTS.

TYPICAL STEPPED FOOTING DETAIL

F1

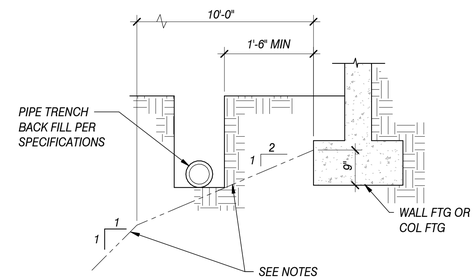

NOTES:

1. NO EXCAVATIONS PERMITTED BELOW THIS LINE AFTER FOOTING HAS BEEN CONSTRUCTED UNLESS EXCAVATION IS SHORED AS REQUIRED TO RESIST THE EFFECT OF THE FOUNDATION PRESSURE
2. ANY PIPE OR CONDUIT BELOW THIS LINE SHALL BE ENCASED IN CONCRETE OR RATED AND APPROVED BY THE SPECIFYING ENGINEER TO WITHSTAND THE EFFECT OF THE FOUNDATION PRESSURE.

PIPE TRENCH EXCAVATION ADJACENT TO FTG

F4

Costa & Associates
STRUCTURAL ENGINEERS
1543 W. GARVEY AVENUE NORTH #215
WEST COVINA, CA 91790
TEL: (626) 960-1811
JOB NO. 119023

REGISTERED PROFESSIONAL ENGINEER ARMANDO S. COSTA No. SE 2265 Exp. 3-31-21 STRUCTURAL STATE OF CALIFORNIA

DATE	REVISIONS

WATERSHED CONSERVATION AUTHORITY
100 N OLD SAN GABRIEL CANYON ROAD
AZUSA, CA 91702
PHONE: (626) 815-1019

Blue Green
Open Space Planning & Design
2616 NORTH FIGUEROA, SUITE A
LOS ANGELES, CALIFORNIA 90065
(323) 221-9500

SHEET TITLE: TYPICAL DETAILS

PROJECT TITLE: OAKS STAIRWAY & OVERLOOK
EAST FORK, SAN GABRIEL RIVER

LICENSED LANDSCAPE ARCHITECT LYNNE DWYER 5/31/2021 LICENSE NO. 3597

DRAWN BY:	PS
CHECKED BY:	OC
PROJECT NO.	OS2019
DATE:	DECEMBER 2019

S-102

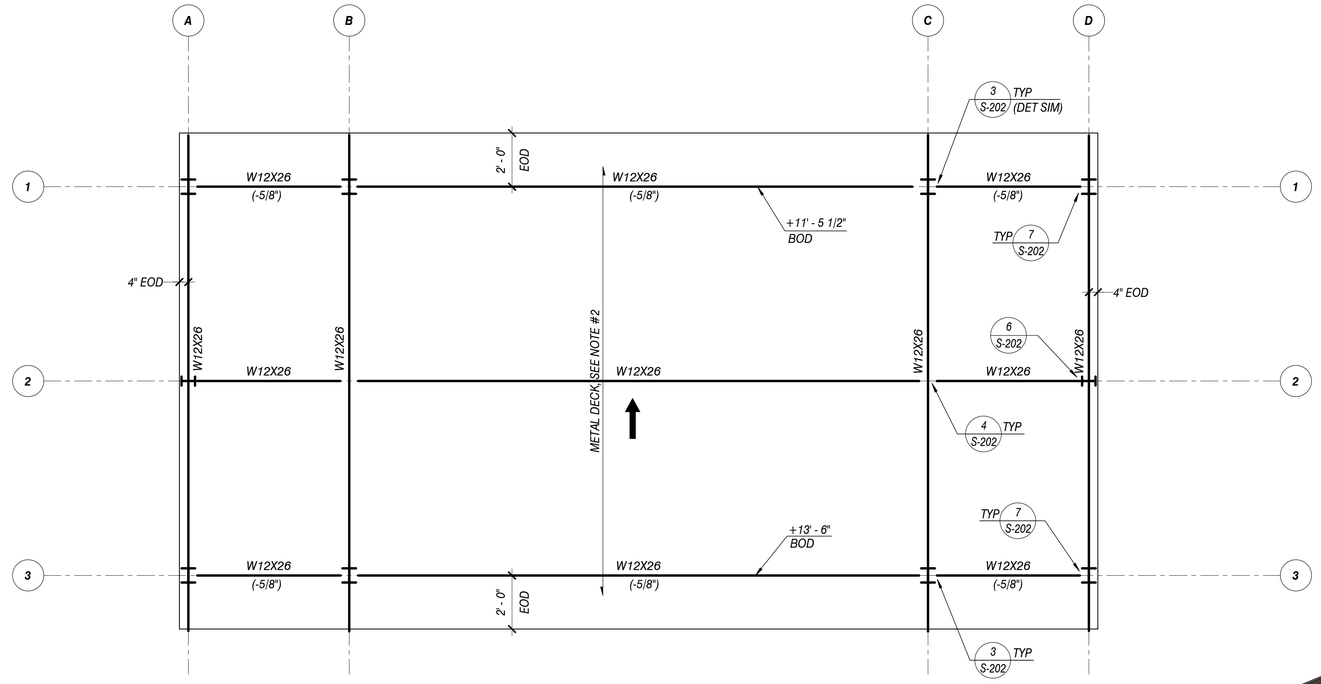

SHADE STRUCTURE ROOF FRAMING PLAN

SCALE: 3/8"=1'-0"

SHADE STRUCTURE ROOF NOTES:

1. REFER TO SHEET S-101 AND S-102 FOR GENERAL NOTES AND TYPICAL DETAILS.
2. ROOF DECK CONSISTS OF 1 1/2" DEEP HR-36 GALVANIZED METAL DECK (G-90) FASTENED WITH 10-14 TEKS SCREWS, 4/UNIT AT SUPPORTS AND AT 18" OC AT PARALLEL SUPPORTS.
3. TOP OF STEEL ELEVATION (TOS) = BOTTOM OF STEEL DECK ELEVATION (BOD) UNLESS NOTED OTHERWISE.
4. +0'-0" / BOD INDICATES BOTTOM OF DECK ELEVATION (VARIES) FROM REFERENCE FINISH FLOOR.

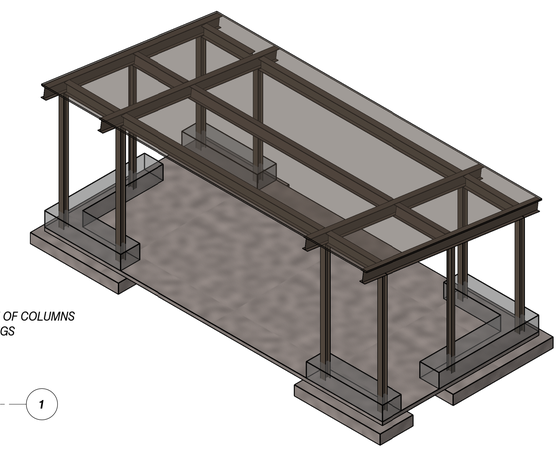

3D VIEW KEY PLAN

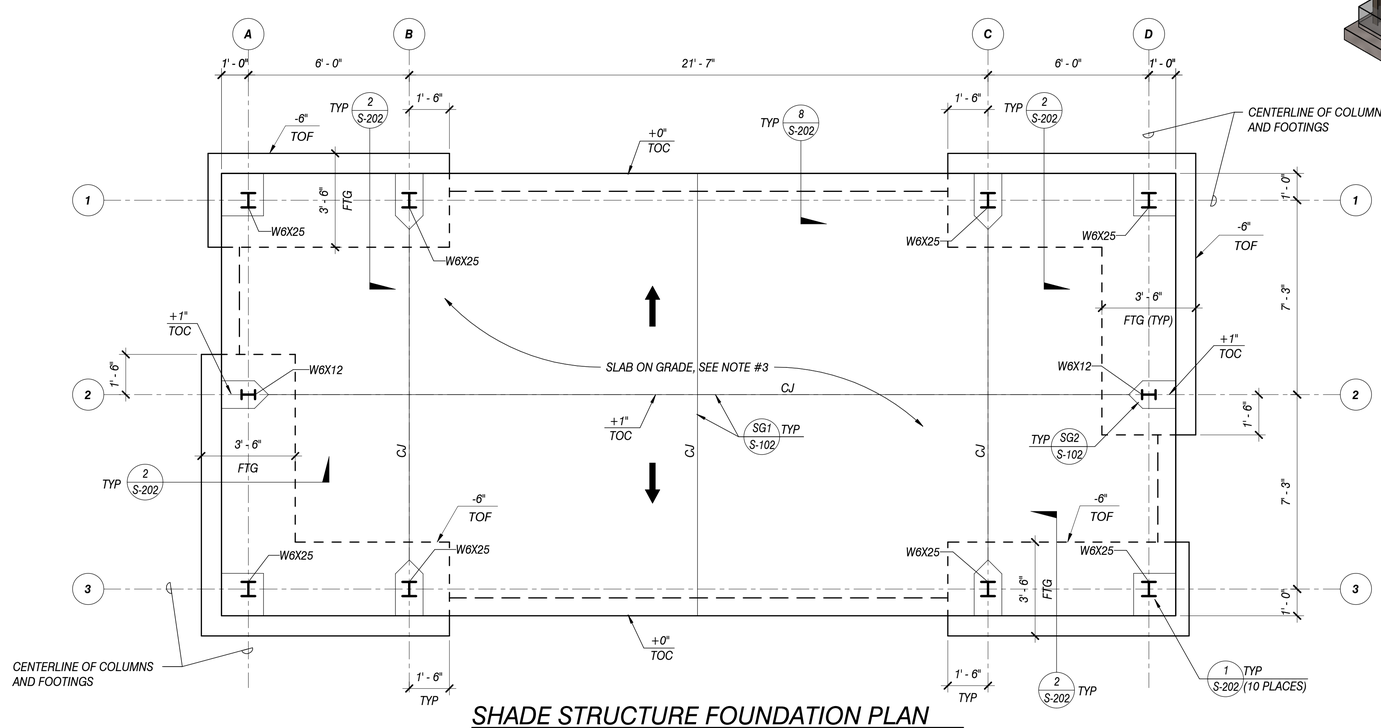

SHADE STRUCTURE FOUNDATION PLAN

SCALE: 3/8"=1'-0"

SHADE STRUCTURE FOUNDATION PLAN NOTES:

1. REFER TO SHEET S-101 AND S-102 FOR GENERAL NOTES AND TYPICAL DETAILS.
2. REFERENCE FINISH GROUND FLOOR EL=+0'-0", SEE LANDSCAPE OR CIVIL DRAWINGS FOR DATUM.
3. SLAB ON GRADE CONSISTS OF 4" THICK CONCRETE REINFORCED WITH #4 AT 18" OC EACH WAY ON SLAB MID-DEPTH. SEE LANDSCAPE OR CIVIL DRAWINGS FOR SUB GRADE.
4. FINISH TOC SLAB ON GRADE ELEVATION = REFERENCE FINISH FLOOR ELEVATION.
5. -X-X" / TOF INDICATES TOP OF FOOTING (TOF) ELEVATION FROM REFERENCE FINISH FLOOR.
6. -X-X" / TOC INDICATES TOP OF CONCRETE SLAB (TOC) FROM REFERENCE FINISH FLOOR.

REGISTERED PROFESSIONAL ENGINEER
ORLANDO S. COSTA
EXP. RE 72865
EXP. 3-31-21
STRUCTURAL
STATE OF CALIFORNIA

Costa & Associates
STRUCTURAL ENGINEERS
1543 W. GARVEY AVENUE NORTH #215
WEST COVINA, CA 91790
TEL: (626) 960-1811

JOB NO. 119023

REVISIONS	DATE

WATERSHED CONSERVATION AUTHORITY
100 N OLD SAN GABRIEL CANYON ROAD
AZUSA, CA 91702
PHONE: (626) 815-1019

BlueGreen
Open Space Planning & Design
2616 NORTH FIGUEROA, SUITE A
LOS ANGELES, CALIFORNIA 90065
(323) 221-9500

SHEET TITLE: SHADE STRUCTURE FRAMING PLANS

PROJECT TITLE: OAKS STAIRWAY & OVERLOOK
EAST FORK, SAN GABRIEL RIVER

LICENSED LANDSCAPE ARCHITECT
LYNNE DWYER
5/31/2021
LICENSE NO. 3998

DRAWN BY:	PS
CHECKED BY:	OC
PROJECT NO.	OS2019
DATE:	DECEMBER 2019

S-201

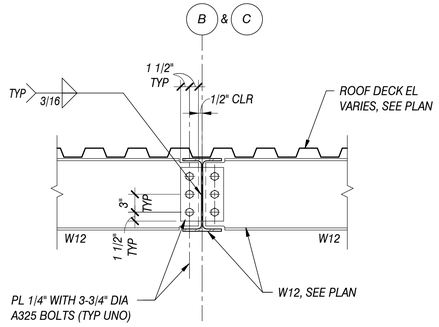

4 / S-202 1" = 1'-0"

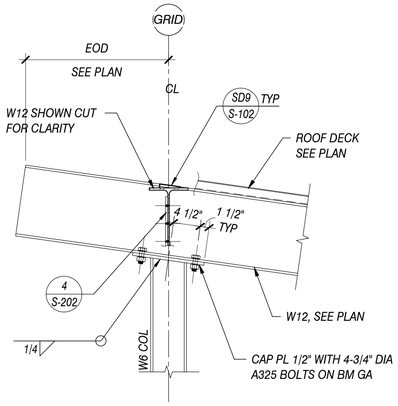

3 / S-202 1" = 1'-0"

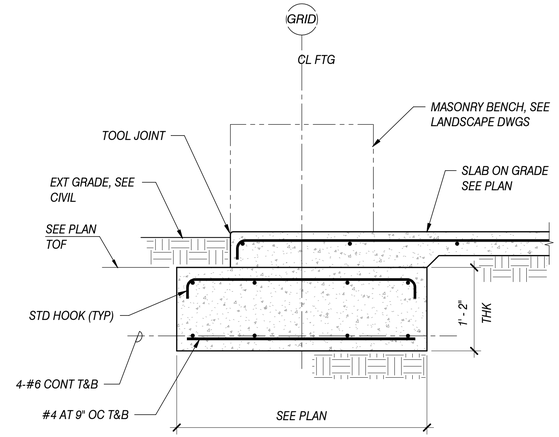

2 / S-202 TYP FOOTING DETAIL
1" = 1'-0"

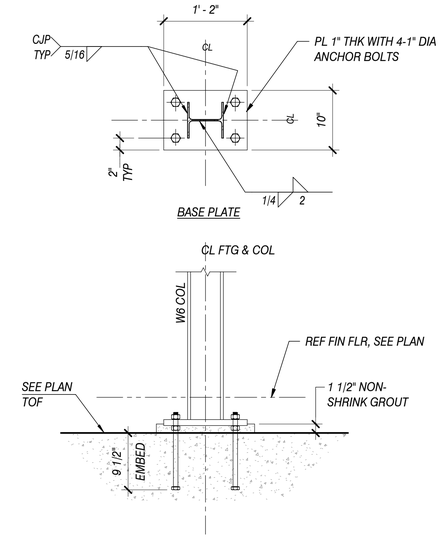

1 / S-202 TYP BASE PLATE DETAIL
1" = 1'-0"

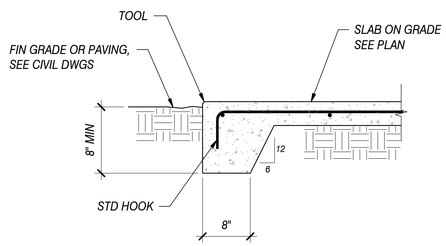

8 / S-202 TYP SLAB EDGE DETAIL
1" = 1'-0"

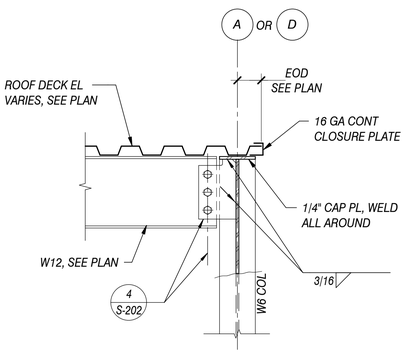

7 / S-202 1" = 1'-0"

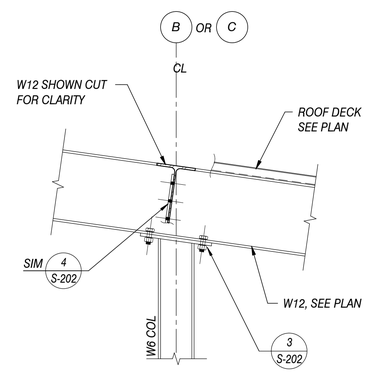

6 / S-202 1" = 1'-0"

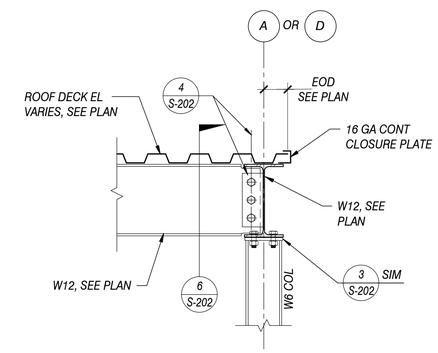

5 / S-202 1" = 1'-0"

REVISIONS	DATE

WATERSHED CONSERVATION AUTHORITY
100 N OLD SAN GABRIEL CANYON ROAD
AZUSA, CA 91702
PHONE: (626) 815-1019

BlueGreen Open Space Planning & Design
2616 NORTH FIGUEROA, SUITE A
LOS ANGELES, CALIFORNIA 90065
(323) 221-9500

SHEET TITLE: SECTIONS AND DETAILS

PROJECT TITLE: OAKS STAIRWAY & OVERLOOK
EAST FORK, SAN GABRIEL RIVER

LICENSED LANDSCAPE ARCHITECT
LYNNE DWYER
5/31/2021
LICENSE NO. 3802

DRAWN BY:	PS
CHECKED BY:	OC
PROJECT NO.	OS2019
DATE:	DECEMBER 2019

S-202

REGISTERED PROFESSIONAL ENGINEER
ORLANDO S. COSTA
No. SE 7285
Exp. 3-31-21
STRUCTURAL
STATE OF CALIFORNIA

Costa & Associates
STRUCTURAL ENGINEERS
1543 W. GARVEY AVENUE NORTH #215
WEST COVINA, CA 91790
TEL: (626) 960-1811
JOB NO. 119023

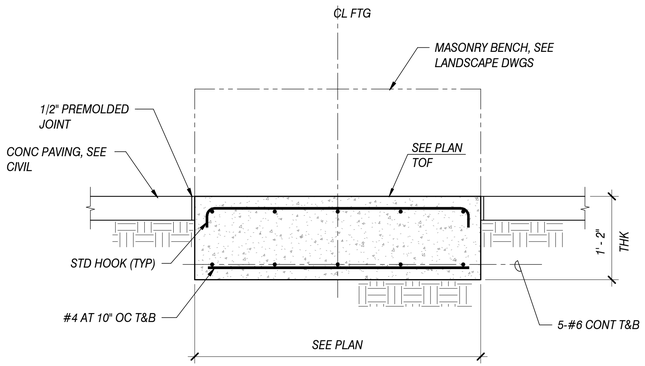

1 / S-203 KIOSK FOOTING DETAIL
1" = 1'-0"

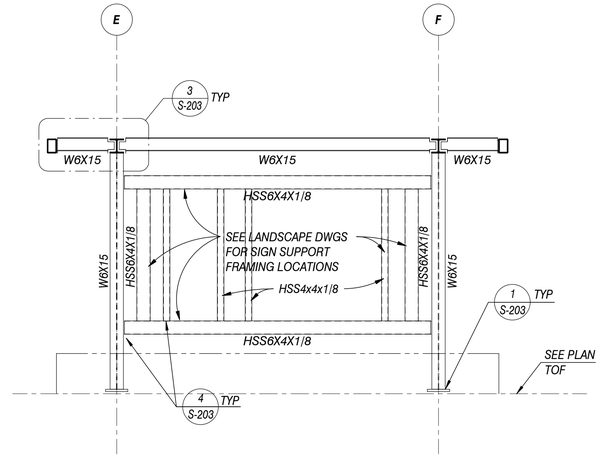

A / S-203 FRAME ELEVATION
3/8" = 1'-0"

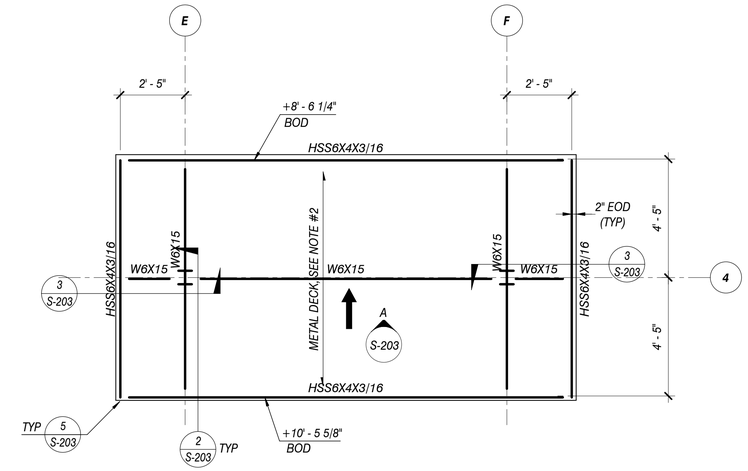

KIOSK ROOF FRAMING PLAN

SCALE: 3/8" = 1'-0"

NOTES:
1. REFER TO SHEETS S-101 AND S-102 FOR GENERAL NOTES AND TYPICAL DETAILS.
2. ROOF DECK CONSISTS OF 1 1/2" DEEP HR-36 GALVANIZED METAL DECK (G-90) FASTENED WITH 10-14 TEKS SCREWS, 4/UNIT AT SUPPORTS AND 18" OC AT PARALLEL SUPPORTS.
3. TOP OF STEEL ELEVATION (TOS) = BOTTOM OF DECK ELEVATION (VARIES) FROM REFERENCE FINISH FLOOR.
4. +0'-0" / BOD INDICATES BOTTOM OF DECK ELEVATION (VARIES) FROM REFERENCE FINISH FLOOR.

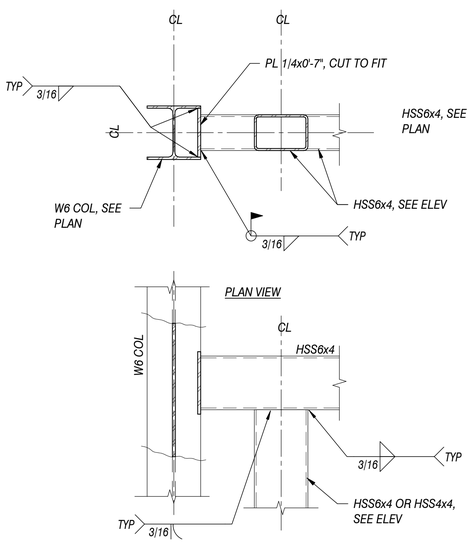

4 / S-203 DETAIL AT SIGN SUPPORTS
1 1/2" = 1'-0"

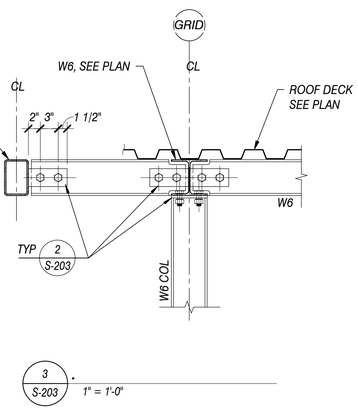

3 / S-203 1" = 1'-0"

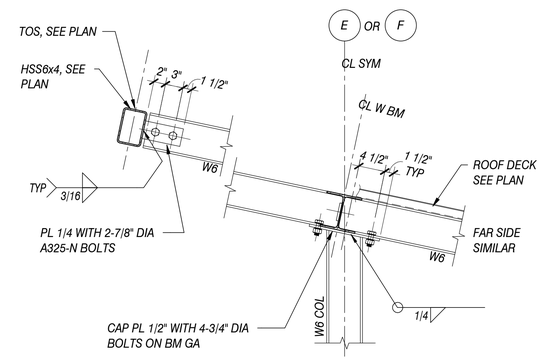

2 / S-203 1" = 1'-0"

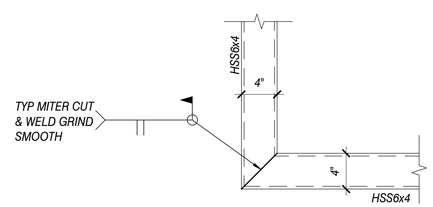

5 / S-203 1 1/2" = 1'-0"

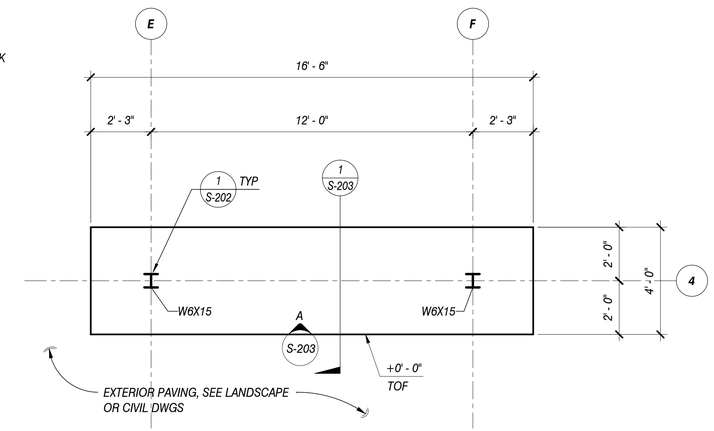

KIOSK FOUNDATION PLAN

SCALE: 3/8" = 1'-0"

NOTES:
1. REFER TO SHEETS S-101 AND S-102 FOR GENERAL NOTES AND TYPICAL DETAILS.
2. REFERENCE FINISH GROUND FLOOR EL = +0'-0", SEE LANDSCAPE OR CIVIL DRAWINGS FOR DATUM.
3. +X-X" / TOF INDICATES TOP OF FOOTING ELEVATION FROM REFERENCE FINISH FLOOR.

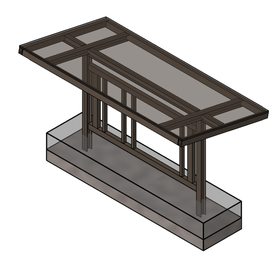

3D VIEW KEY PLAN

Costa & Associates
STRUCTURAL ENGINEERS
1543 W. GARVEY AVENUE NORTH #215
WEST COVINA, CA 91790
TEL: (626) 960-1811
JOB NO. 119023

REGISTERED PROFESSIONAL ENGINEER — RICHARDO S. COSTA — No. SE 7265 — Exp. 3-31-21 — STRUCTURAL — STATE OF CALIFORNIA

DATE	REVISIONS

WATERSHED CONSERVATION AUTHORITY
100 N OLD SAN GABRIEL CANYON ROAD
AZUSA, CA 91702
PHONE: (626) 815-1019

Blue Green
Open Space Planning & Design
2616 NORTH FIGUEROA, SUITE A
LOS ANGELES, CALIFORNIA 90065
(323) 221-9500

SHEET TITLE: KIOSK FRAMING PLANS, ELEVATION AND DETAILS

PROJECT TITLE: OAKS STAIRWAY & OVERLOOK
EAST FORK, SAN GABRIEL RIVER

LICENSED LANDSCAPE ARCHITECT — LYNNE DWYER — 5/31/2021 — LICENSE NO. 3697

DRAWN BY:	PS
CHECKED BY:	OC
PROJECT NO.	OS2019
DATE:	DECEMBER 2019

S-203

2022A

poligon®

PROJECT:

LOCATION:

BUILDING TYPE: MSL

ROOF TYPE: MULTI-RIB

BUILDING NUMBER:

ORDER NUMBER:

QUOTE NUMBER:

DRAWING LIST:

SHEET NUMBER	DRAWING DESCRIPTION
CS	COVER SHEET
1	ARCHITECTURAL ELEVATIONS
2	STRUCTURAL FRAMING PLAN
3	COLUMN LAYOUT

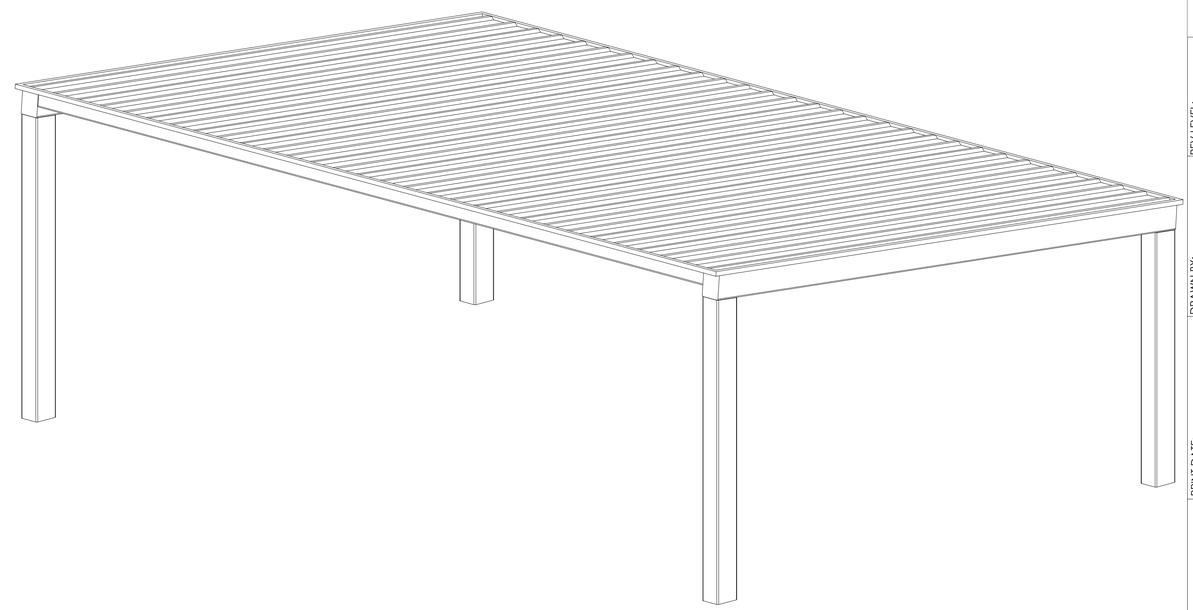

CERTIFICATES:
MIAMI-DADE COUNTY CERTIFICATE OF COMPETENCY NO. 21-0819.13
PCI (POWDER COATING INSTITUTE) 4000 CERTIFIED

FABRICATOR APPROVALS:
CITY OF PHOENIX, AZ APPROVED FABRICATOR #C08-2010
CITY OF LOS ANGELES, CA APPROVED FABRICATOR #FB01596
CITY OF RIVERSIDE, CA APPROVED FABRICATOR #SF_000042
CITY OF HOUSTON, TX APPROVED FABRICATOR #470
CLARK COUNTY, NV APPROVED FABRICATOR #264
STATE OF UTAH APPROVED FABRICATOR 02008-14
AISC APPROVED FABRICATOR C-00018751

MATERIALS:

DESCRIPTION	ASTM DESIGNATION
TUBE STEEL	A500 (GRADE B)
SCHEDULE PIPE	A53 (GRADE B)
RMT PIPE	A519
LIGHT GAGE COLD FORMED	A1003 (GRADE 50)
STRUCTURAL STEEL PLATE	A36
ROOF PANELS (STEEL)	A653

AMERICAN INSTITUTE OF STEEL CONSTRUCTION AISC FOUNDED 1921

GENERAL NOTES:
UNLESS NOTED OTHERWISE, THIS STRUCTURE WAS DESIGNED TO ONLY SUPPORT WHAT IS SHOWN ON THESE DRAWINGS. THE MANUFACTURER MUST BE CONTACTED IF ANYTHING ELSE IS TO BE ATTACHED TO THIS STRUCTURE (WALLS, COLUMN WRAPS, RAILINGS, ETC.) SO THE DESIGN OF THIS STRUCTURE CAN BE REVIEWED AND POSSIBLY REVISED.

UNLESS NOTED OTHERWISE, THIS STRUCTURE WAS DESIGNED ASSUMING A 20' SEPARATION BETWEEN ANY ADJACENT STRUCTURE WITH AN EAVE HEIGHT EQUAL TO OR GREATER THAN THE EAVE HEIGHT OF THIS STRUCTURE. IF THAT SEPARATION DOES NOT EXIST, THE MANUFACTURER MUST BE CONTACTED SO THE DESIGN OF THIS STRUCTURE CAN BE REVIEWED AND POSSIBLY REVISED.

STRUCTURAL STEEL SHALL BE DETAILED, FABRICATED, AND ERECTED IN ACCORDANCE WITH THE LATEST EDITION OF THE AMERICAN INSTITUTE OF STEEL CONSTRUCTION (AISC) SPECIFICATION MANUAL.

ALL WELDING IS PERFORMED BY AMERICAN WELDING SOCIETY (AWS) CERTIFIED WELDERS AND CONFORMS TO THE LATEST EDITION OF AWS D1.1 OR D1.3 AS REQUIRED.

PARTS SHOWN MAY BE UPGRADED DUE TO STANDARDIZED FABRICATION. REFER TO THE SHIPPING BILL OF MATERIALS FOR POSSIBLE SUBSTITUTIONS.

FOR PROPER FIELD INSTALLATION OF THE BUILDING IT IS RECOMMENDED THAT THE PRIMARY FRAME INSTALLER AND THE ROOF INSTALLER HAVE A MINIMUM FIVE (5) YEARS DOCUMENTED EXPERIENCE INSTALLING THIS TYPE OF PRODUCT.

FOR PROPER FIELD INSTALLATION OF THE BUILDING IT IS RECOMMENDED THAT ELECTRIC WIRING, IF REQUIRED, BE RUN THROUGH THE STRUCTURAL MEMBERS BEFORE THE BUILDING IS ERECTED.

STOP!!
NOT FOR CONSTRUCTION

USE FOR PRELIMINARY PLANNING AND ESTIMATING ONLY

ROOF COLOR TO BE "TUDOR BROWN"
FRAME COLOR TO BE "BARKWOOD"
FOR LOCATIONS OF STRUCTURES, QUANTITIES OF POSTS, LOCATION OF POSTS REFERENCE SHEETS:
S-1.50, S-1.51, S-1.52

BID ALTERNATE A6

poligon® by PORTER CORP
WWW.POLIGON.COM
MAIN: (616) 888-3500
FIELD SUPPORT: (616) 888-3504

PROJECT:
PROJECT LOCATION:
DRAWING: COVER SHEET
SHEET CS

PRINT DATE: 12/21/2023
JOB NO:
DRAWN BY: chris.lisac
REV LEVEL: A
SCALE: 1:48
CAD MODEL: MSL-20X30

REVISIONS	DATE
1 BID ALTERNATES	08/16/2026
2 PLAN REVISIONS	07/15/2026
3 CXT RESTROOM	07/15/2026

WATERSHED CONSERVATION AUTHORITY
100 N OLD SAN GABRIEL CANYON ROAD
AZUSA, CA 91702
PHONE: (626) 815-1019

Lynne Dwyer Landscape Architect
2616 NORTH FIGUEROA, SUITE A
LOS ANGELES, CA 90065
(323) 221-9500

SHEET TITLE: SHADE STRUCTURE

PROJECT TITLE: OAKS STAIRWAY & OVERLOOK
EAST FORK, SAN GABRIEL RIVER

LICENSED LANDSCAPE ARCHITECT LYNNE DWYER Signature 5/31/2027 Renewal Date LICENSE NO. 2657 STATE OF CALIFORNIA

DRAWN BY:	KT
CHECKED BY:	LD
PROJECT NO.	OS2019
DATE:	JULY 15 2026

CS-0.00

GENERAL ROOF NOTES:

1. METAL ROOFING:
   - 24 GAUGE
   - GALVALUME COATED
   - KYNAR 500 PAINTED
2. TRIM COLOR MATCHES ROOF
3. SEE POLIGON.COM FOR COLOR OPTIONS

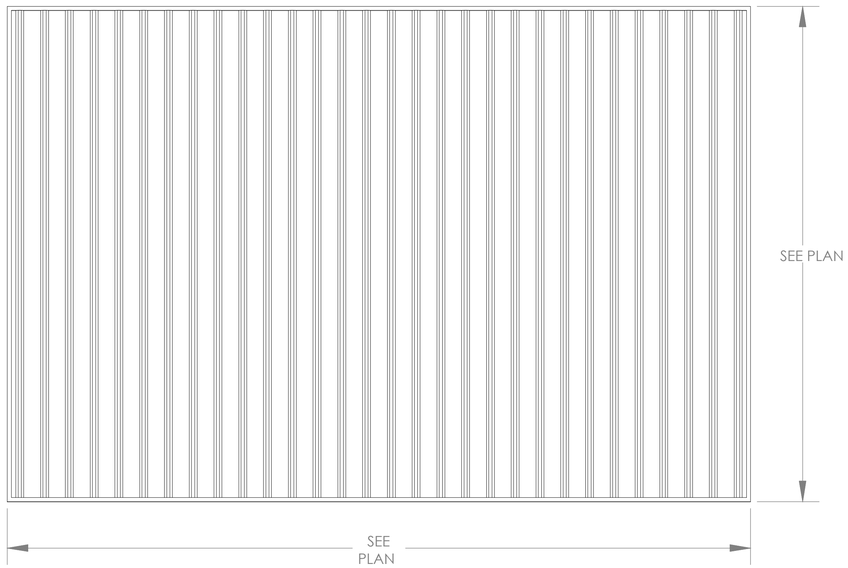

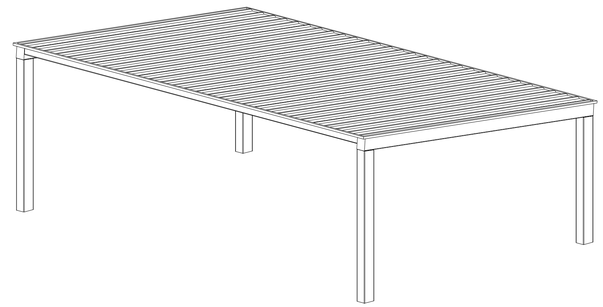

STOP!!
NOT FOR CONSTRUCTION

USE FOR PRELIMINARY PLANNING AND ESTIMATING ONLY

DRAWING: ARCHITECTURAL ELEVATIONS
SCALE: 1:64
REV LEVEL: A

poligon® (616)399-1963 www.poligon.com by PORTERCORP

COPYRIGHT 2016
PATENTED OR PATENTS PENDING
PORTERCORP 4240 N. 136th AVE HOLLAND, MI 49424

SHEET 1

ROOF COLOR TO BE "TUDOR BROWN"
FRAME COLOR TO BE "BARKWOOD"
FOR LOCATIONS OF STRUCTURES, QUANTITIES OF POSTS, LOCATION OF POSTS REFERENCE SHEETS: S-1.50, S-1.51, S-1.52

BID ALTERNATE A6

REVISIONS	DATE
1 BID ALTERNATES	08/16/2026
2 PLAN REVISIONS	07/15/2026
3 CXT RESTROOM	07/15/2026

WATERSHED CONSERVATION AUTHORITY
100 N OLD SAN GABRIEL CANYON ROAD
AZUSA, CA 91702
PHONE: (626) 815-1019

Lynne Dwyer
Landscape Architect
2616 NORTH FIGUEROA, SUITE A
LOS ANGELES, CA 90065
(323) 221-9500

SHEET TITLE: SHADE STRUCTURE DRAWINGS

PROJECT TITLE: OAKS STAIRWAY & OVERLOOK
EAST FORK, SAN GABRIEL RIVER

LICENSED LANDSCAPE ARCHITECT LYNNE DWYER Signature 5/31/2027 Renewal Date LICENSE NO. 3667 STATE OF CALIFORNIA

DRAWN BY:	KT
CHECKED BY:	LD
PROJECT NO.	OS2019
DATE:	JULY 15 2026

CS-1.00

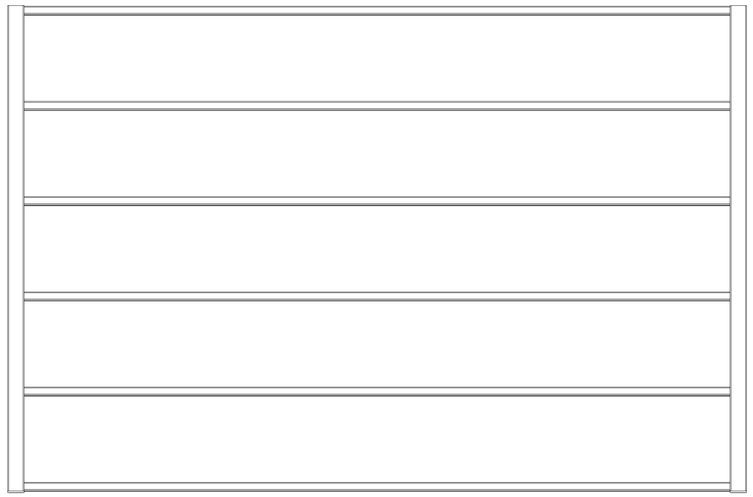

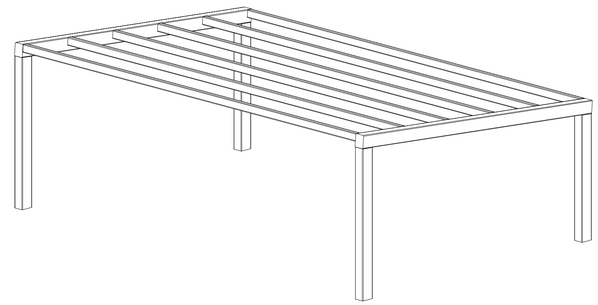

FINISH GRADE.
MOUNTING VARIES
BASED ON ENGINEERING
REQUIREMENTS.

STOP!!
NOT FOR CONSTRUCTION

USE FOR PRELIMINARY
PLANNING AND ESTIMATING
ONLY

DRAWING:
STRUCTURAL FRAMING PLAN

SCALE: 1:64

REV LEVEL: A

poligon®
(616)399-1963
www.poligon.com
by PORTERCORP

COPYRIGHT 2016
PATENTED OR PATENTS PENDING
PORTERCORP 4240 N. 136th AVE HOLLAND, MI 49424

SHEET 2

ROOF COLOR TO BE "TUDOR BROWN"
FRAME COLOR TO BE "BARKWOOD"
FOR LOCATIONS OF STRUCTURES, QUANTITIES OF
POSTS, LOCATION OF POSTS REFERENCE SHEETS:
S-1.50, S-1.51, S-1.52

BID ALTERNATE A6

REVISIONS	DATE
1 BID ALTERNATES	08/16/2026
2 PLAN REVISIONS	07/15/2026
3 CXT RESTROOM	07/15/2026

WATERSHED CONSERVATION AUTHORITY
100 N OLD SAN GABRIEL CANYON ROAD
AZUSA, CA 91702
PHONE: (626) 815-1019

Lynne Dwyer
Landscape Architect
2616 NORTH FIGUEROA, SUITE A
LOS ANGELES, CA 90065
(323) 221-9500

SHEET TITLE
SHADE STRUCTURE
COLOR PALETTE

PROJECT TITLE
OAKS STAIRWAY & OVERLOOK
EAST FORK,
SAN GABRIEL RIVER

LICENSED LANDSCAPE ARCHITECT
LYNNE DWYER
Signature
5/31/2027
Renewal Date
LICENSE NO. 3607
STATE OF CALIFORNIA

DRAWN BY:	KT
CHECKED BY:	LD
PROJECT NO.	OS2019
DATE:	JULY 15 2026

CS-2.00

BASEPLATE NOTES:

1. POLIGON ENGINEERING WILL DETERMINE REQUIRED BASEPLATE DESIGN AFTER ENGINEERING PACKAGE IS ORDERED.
2. CUSTOMER MAY SUGGEST PREFERRED BASEPLATE DESIGN.

STOP!!
NOT FOR CONSTRUCTION

USE FOR PRELIMINARY PLANNING AND ESTIMATING ONLY

DRAWING: COLUMN LAYOUT
SCALE: 1:40
REV LEVEL: A

poligon®
(616)399-1963
www.poligon.com
by PORTERCORP

COPYRIGHT 2016
PATENTED OR PATENTS PENDING
PORTERCORP 4240 N. 136th AVE HOLLAND, MI 49424

SHEET 3

ROOF COLOR TO BE "TUDOR BROWN"
FRAME COLOR TO BE "BARKWOOD"
FOR LOCATIONS OF STRUCTURES, QUANTITIES OF POSTS, LOCATION OF POSTS REFERENCE SHEETS: S-1.50, S-1.51, S-1.52

BID ALTERNATE A6

REVISIONS	DATE
1 BID ALTERNATES	08/16/2026
2 PLAN REVISIONS	07/15/2026
3 CXT RESTROOM	07/15/2026

WATERSHED CONSERVATION AUTHORITY
100 N OLD SAN GABRIEL CANYON ROAD
AZUSA, CA 91702
PHONE: (626) 815-1019

Lynne Dwyer Landscape Architect
2616 NORTH FIGUEROA, SUITE A
LOS ANGELES, CA 90065
(323) 221-9500

SHEET TITLE: SHADE STRUCTURE COLOR PALETTE

PROJECT TITLE: OAKS STAIRWAY & OVERLOOK
EAST FORK, SAN GABRIEL RIVER

LICENSED LANDSCAPE ARCHITECT LYNNE DWYER
Signature
5/31/2027
Renewal Date
LICENSE NO. 3601
STATE OF CALIFORNIA

DRAWN BY:	KT
CHECKED BY:	LD
PROJECT NO.	OS2019
DATE:	JULY 15 2026

CS-3.00

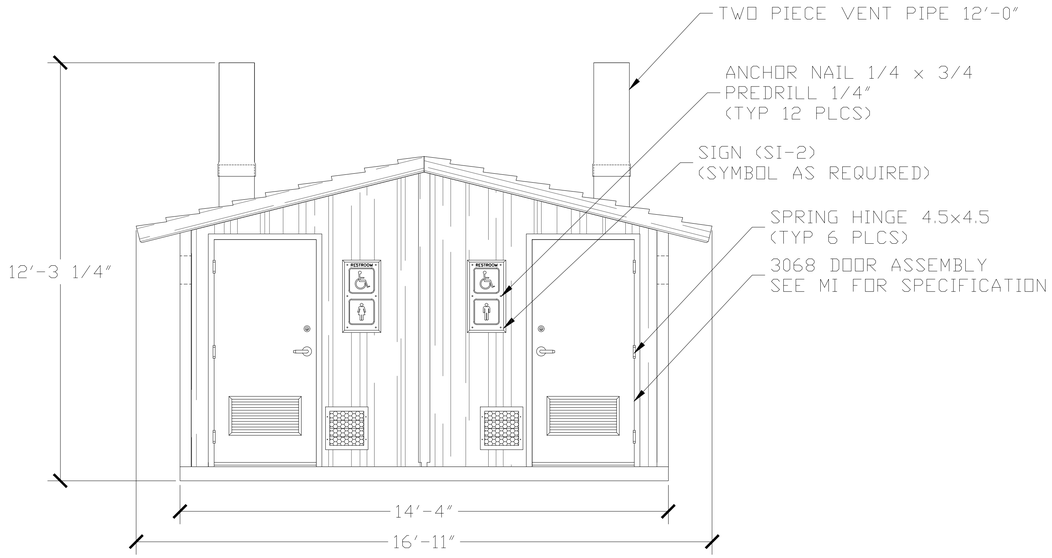

FRONT ELEVATION

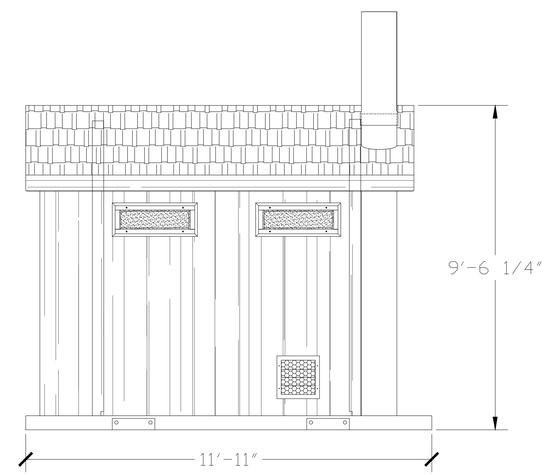

RIGHT SIDE ELEVATION

FOR REFERENCE ONLY

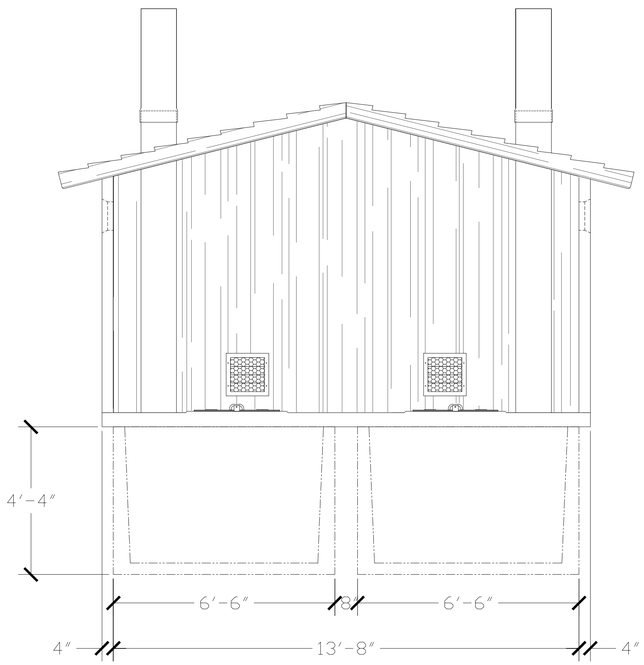

REAR ELEVATION

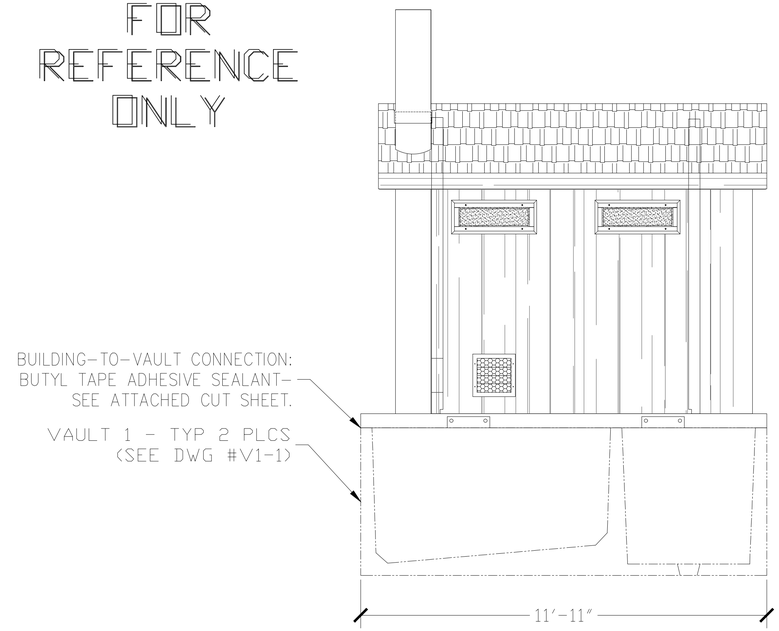

LEFT SIDE ELEVATION

EMBEDDED MATERIALS

ITEM	QTY	ITEM	QTY
SI-2	2		
VENT PIPE 9'-0"	2		
3068 DOOR ASSEMBLY	2		
SPRING HINGE 4.5x4.5	6		
ANCHOR NAIL 1/4x3/4	12		
VENT PIPE 3'-0"	2		

CU. FT. CONC.	SQ. FT. W.W.F.	APPROXIMATE WEIGHT

Precast Products ®

PROJECT TITLE
TIOGA
CXT STANDARD BUILDING

NOTICE

The information contained herein is proprietary and the exclusive property of CXT Incorporated. The information may only be used by the original recipient for the purpose intended. Reproduction or distribution of this information is strictly prohibited without the prior written consent of CXT Incorporated. By allowing use of this information, CXT Incorporated grants no warranty, express or implied, including a warranty of merchantability or of fitness for a particular purpose.

CXT Incorporated

REV.	DESCRIPTION	APPROVAL	DATE

SCALE	1/4"=1'-0"	DATE	07-19-16
DRAWN		FILE NO.	PD-T02
CHECKED		PLOT	48

BUILDING ELEVATIONS

DWG NO.	SHEET	REV.
T-02		

REVISIONS	DATE
1 BID ALTERNATES	08/16/2026
2 PLAN REVISIONS	07/15/2026
3 CXT RESTROOM	07/15/2026

WATERSHED CONSERVATION AUTHORITY
100 N OLD SAN GABRIEL CANYON ROAD
AZUSA, CA 91702
PHONE: (626) 815-1019

Lynne Dwyer
Landscape Architect
2616 NORTH FIGUEROA, SUITE A
LOS ANGELES, CA 90065
(323) 221-9500

SHEET TITLE
CXT RESTROOM

PROJECT TITLE
OAKS STAIRWAY & OVERLOOK
EAST FORK, SAN GABRIEL RIVER

LICENSED LANDSCAPE ARCHITECT
LYNNE DWYER
Signature
5/31/2027
Renewal Date
LICENSE NO. 3667
STATE OF CALIFORNIA

DRAWN BY:	KT
CHECKED BY:	LD
PROJECT NO.	OS2019
DATE:	JULY 15 2026

CXT-1.00

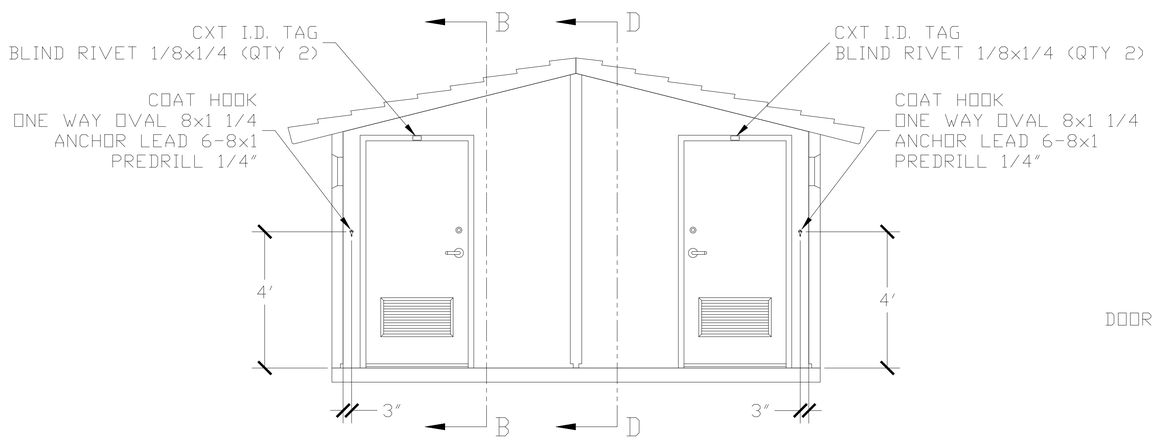

SECTION A – A

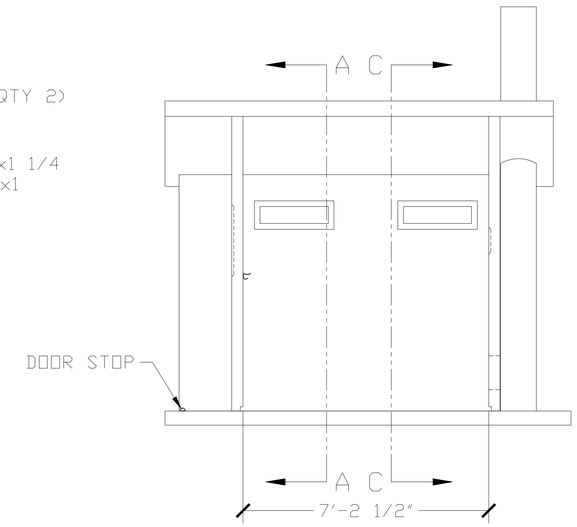

SECTION B – B

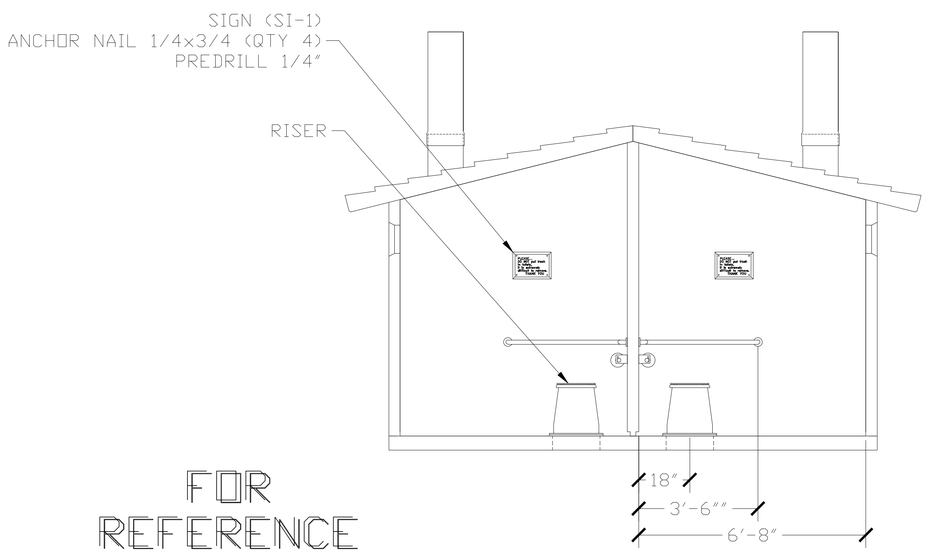

FOR REFERENCE ONLY

SECTION C – C

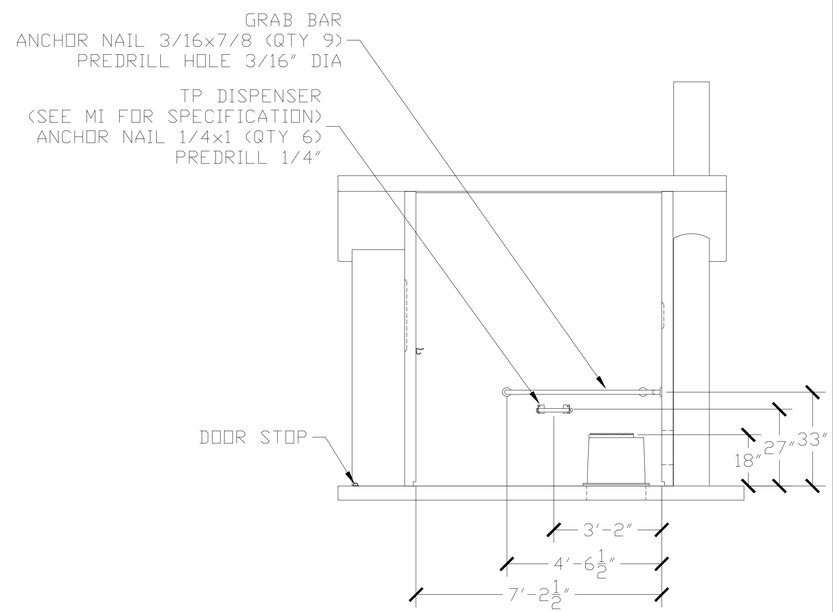

SECTION D – D

EMBEDDED MATERIALS

ITEM	QTY	ITEM	QTY
RISER	2	ONE WAY OVAL 8x1 1/4	4
GRAB BAR	2	ANCHOR LEAD 6-8x1	4
TP DISPENSER	2	BLIND RIVET 1/8x1/4	4
TOILET PAPER ROLL	4-6		
COAT HOOK	2		
DOOR STOP	2		
SI-1	2		
BLIND RIVET 1/8x1/4	4		
CXT I.D. TAG	2		
ANCHOR NAIL 1/4x1	12		
ANCHOR NAIL 1/4x3/4	8		
ANCHOR NAIL 3/16x7/8	18		

CU. FT. CONC.	SQ. FT. W.W.F.	APPROXIMATE WEIGHT

Precast Products®

PROJECT TITLE
TIOGA
CXT STANDARD BUILDING

NOTICE

The information contained herein is proprietary and the exclusive property of CXT Incorporated. The information may only be used by the original recipient for the purpose intended. Reproduction or distribution of this information is strictly prohibited without the prior written consent of CXT Incorporated. By allowing use of this information, CXT Incorporated grants no warranty, express or implied, including a warranty of merchantability or of fitness for a particular purpose.

CXT Incorporated

REV.	DESCRIPTION	APPROVAL	DATE

SCALE	1/4"=1'-0"	DATE	07-19-16
DRAWN		FILE NO.	PD-T03
CHECKED		PLOT	48

INTERIOR ELEVATIONS

DWG NO.	SHEET	REV.
T-03		

REVISIONS	DATE
1 BID ALTERNATES	08/16/2026
2 PLAN REVISIONS	07/15/2026
3 CXT RESTROOM	07/15/2026

WATERSHED CONSERVATION AUTHORITY
100 N OLD SAN GABRIEL CANYON ROAD
AZUSA, CA 91702
PHONE: (626) 815-1019

Lynne Dwyer
Landscape Architect
2616 NORTH FIGUEROA, SUITE A
LOS ANGELES, CA 90065
(323) 221-9500

SHEET TITLE: CXT RESTROOM

PROJECT TITLE: OAKS STAIRWAY & OVERLOOK
EAST FORK, SAN GABRIEL RIVER

LICENSED LANDSCAPE ARCHITECT
LYNNE DWYER
Signature
5/31/2027
Renewal Date
LICENSE NO. 3857
STATE OF CALIFORNIA

DRAWN BY:	KT
CHECKED BY:	LD
PROJECT NO.	OS2019
DATE:	JULY 15 2026

CXT-2.00

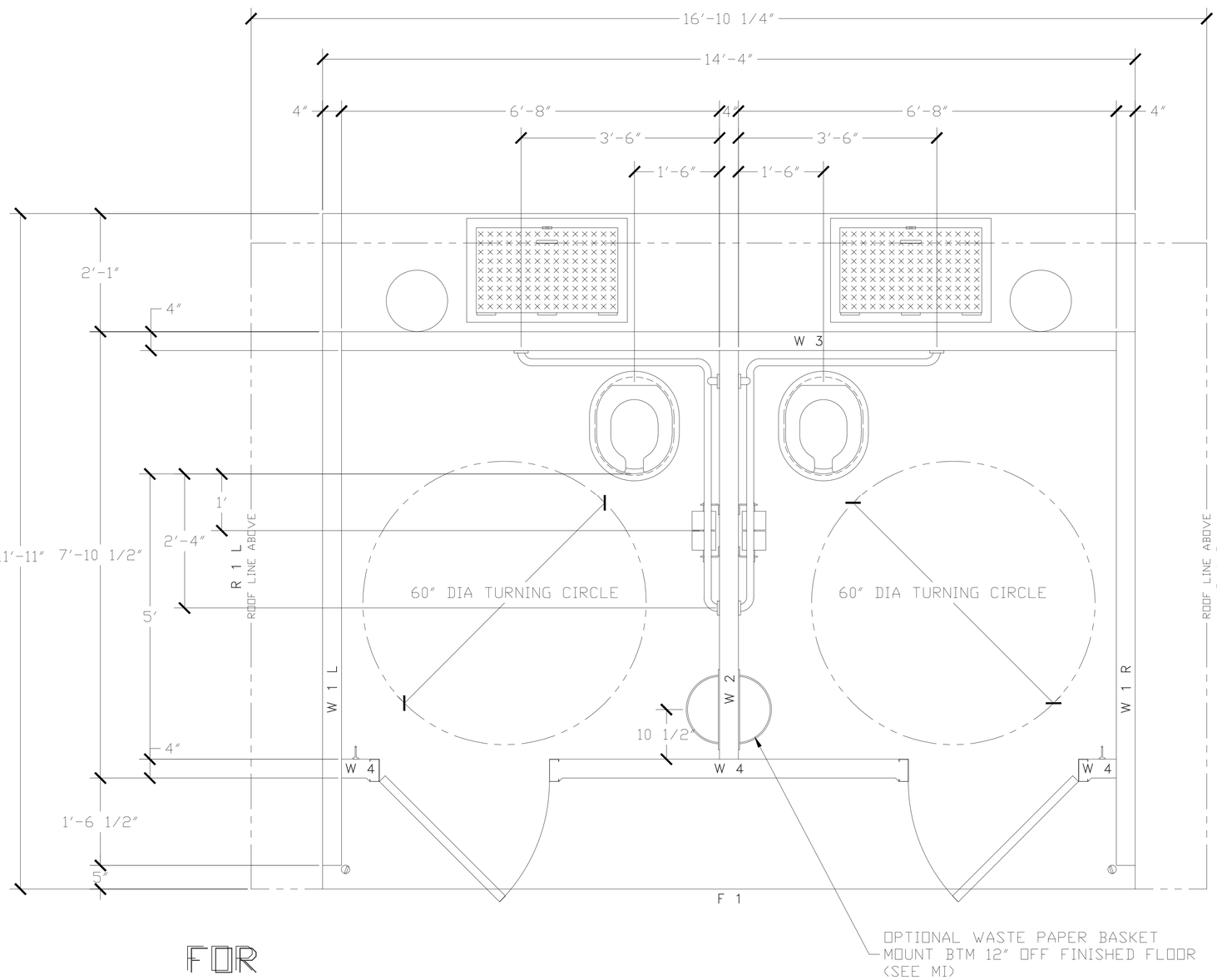

FOR REFERENCE ONLY

REVISIONS	DATE
1 BID ALTERNATES	08/16/2026
2 PLAN REVISIONS	07/15/2026
3 CXT RESTROOM	07/15/2026

WATERSHED CONSERVATION AUTHORITY
100 N OLD SAN GABRIEL CANYON ROAD
AZUSA, CA 91702
PHONE: (626) 815-1019

Lynne Dwyer
Landscape Architect
2616 NORTH FIGUEROA, SUITE A
LOS ANGELES, CA 90065
(323) 221-9500

SHEET TITLE: CXT RESTROOM

Precast Products®

PROJECT TITLE
TIOGA
CXT STANDARD BUILDING

NOTICE

The information contained herein is proprietary and the exclusive property of CXT Incorporated. The information may only be used by the original recipient for the purpose intended. Reproduction or distribution of this information is strictly prohibited without the prior written consent of CXT Incorporated. By allowing use of this information, CXT Incorporated grants no warranty, express or implied, including a warranty of merchantability or of fitness for a particular purpose.

CXT Incorporated

REV.	DESCRIPTION	APPROVAL	DATE

SCALE	1/2"=1'-0"	DATE	07-19-16
DRAWN		FILE NO.	PD-T04
CHECKED		PLOT	24

FLOOR PLAN

DWG NO.	SHEET	REV.
T-04		

PROJECT TITLE: OAKS STAIRWAY & OVERLOOK
EAST FORK, SAN GABRIEL RIVER

LICENSED LANDSCAPE ARCHITECT
LYNNE DWYER
Signature
5/31/2027
Renewal Date
LICENSE NO. 3957
STATE OF CALIFORNIA

DRAWN BY:	KT
CHECKED BY:	LD
PROJECT NO.	OS2019
DATE:	JULY 15 2026

CXT-3.00

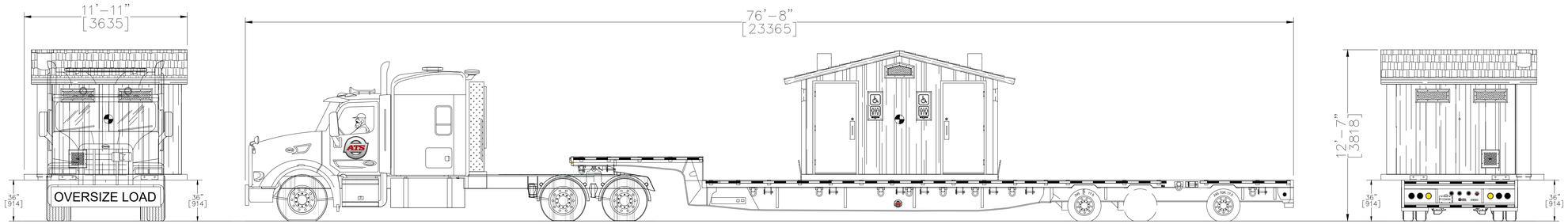

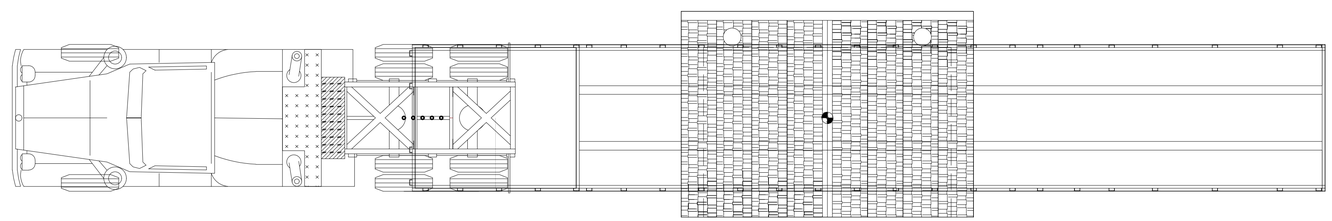

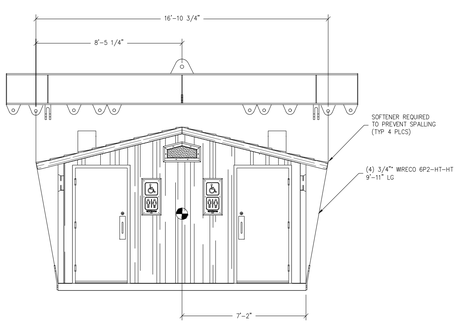

FRONT ELEVATION

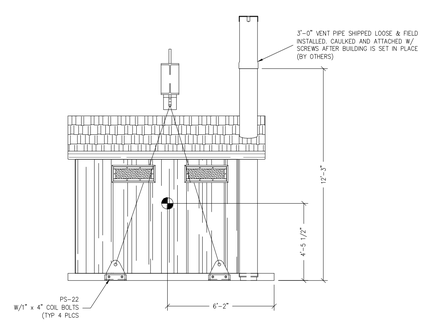

RIGHT SIDE ELEVATION

ATS Projects
725 Opportunity Dr.
St. Cloud, MN 56301

CREATED BY: WER
CREATED DATE: 2023-04-07
SIZE: D
SCALE: NTS
REVISED BY: --
REVISION: 00
REVISED DATE: --

TIOGA
Building Number T-4730

Typical Transport Configuration

Notes:
1. Stepdeck Trailer
2. Tractor 5th wheel 0" forward of center axle.

REVISIONS		
REV	DESCRIPTION	DATE
1	Notes	1-24-2023

DRAWING NO. 20230407-001 | MFR DWG. T-01 | SHEET 01

REVISIONS	DATE
1 BID ALTERNATES	08/16/2026
2 PLAN REVISIONS	07/15/2026
3 CXT RESTROOM	07/15/2026

WATERSHED CONSERVATION AUTHORITY
100 N OLD SAN GABRIEL CANYON ROAD
AZUSA, CA 91702
PHONE: (626) 815-1019

Lynne Dwyer
Landscape Architect
2616 NORTH FIGUEROA, SUITE A
LOS ANGELES, CA 90065
(323) 221-9500

SHEET TITLE: CXT RESTROOM

PROJECT TITLE: OAKS STAIRWAY & OVERLOOK
EAST FORK, SAN GABRIEL RIVER

LICENSED LANDSCAPE ARCHITECT
LYNNE DWYER
Signature
5/31/2027
Renewal Date
LICENSE NO. 3857
STATE OF CALIFORNIA

DRAWN BY:	KT
CHECKED BY:	LD
PROJECT NO.	OS2019
DATE:	JULY 15 2026

CXT-4.00

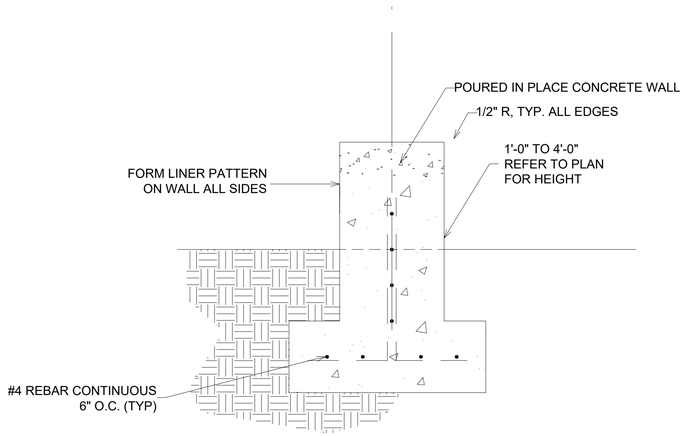

A MASONRY BARRIER WALL / SEATWALL

NTS

NOTES

1. REFER TO SHEETS L-2.00 AND L-2.01 FOR WALL LOCATIONS
2. CONCRETE RETARDER SPRAY TO BE APPLIED TO FRESHLY POURED CONCRETE. WASH AWAY UNCURED TOP LAYER TO EXPOSE AGGREGATE.

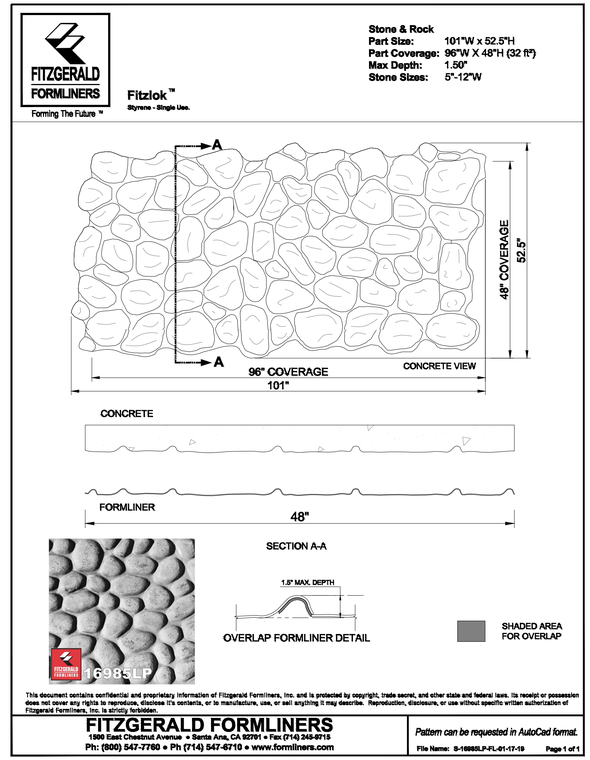

B TYPICAL CONCRETE FORM LINER

NTS

NOTES

1. FORM LINER TO BE APPROVED BY PROJECT LANDSCAPE ARCHITECT AND FOREST LANDSCAPE ARCHITECT.

REVISIONS	DATE
1 BID ALTERNATES	07/15/2026
2 PLAN REVISIONS	07/15/2026
3 CXT RESTROOM	07/15/2026

WATERSHED CONSERVATION AUTHORITY
100 N OLD SAN GABRIEL CANYON ROAD
AZUSA, CA 91702
PHONE: (626) 815-1019

Lynne Dwyer
Landscape Architect
2616 NORTH FIGUEROA, SUITE A
LOS ANGELES, CA 90065
(323) 221-9500

SHEET TITLE

STAMPED CONCRETE BARRIER WALL

PROJECT TITLE

OAKS STAIRWAY & OVERLOOK

EAST FORK, SAN GABRIEL RIVER

LICENSED LANDSCAPE ARCHITECT
LYNNE DWYER
Signature
5/31/2027
Renewal Date
LICENSE NO. 3907
STATE OF CALIFORNIA

DRAWN BY:	KT
CHECKED BY:	LD
PROJECT NO.	OS2019
DATE:	JULY 15 2026

W-1.00