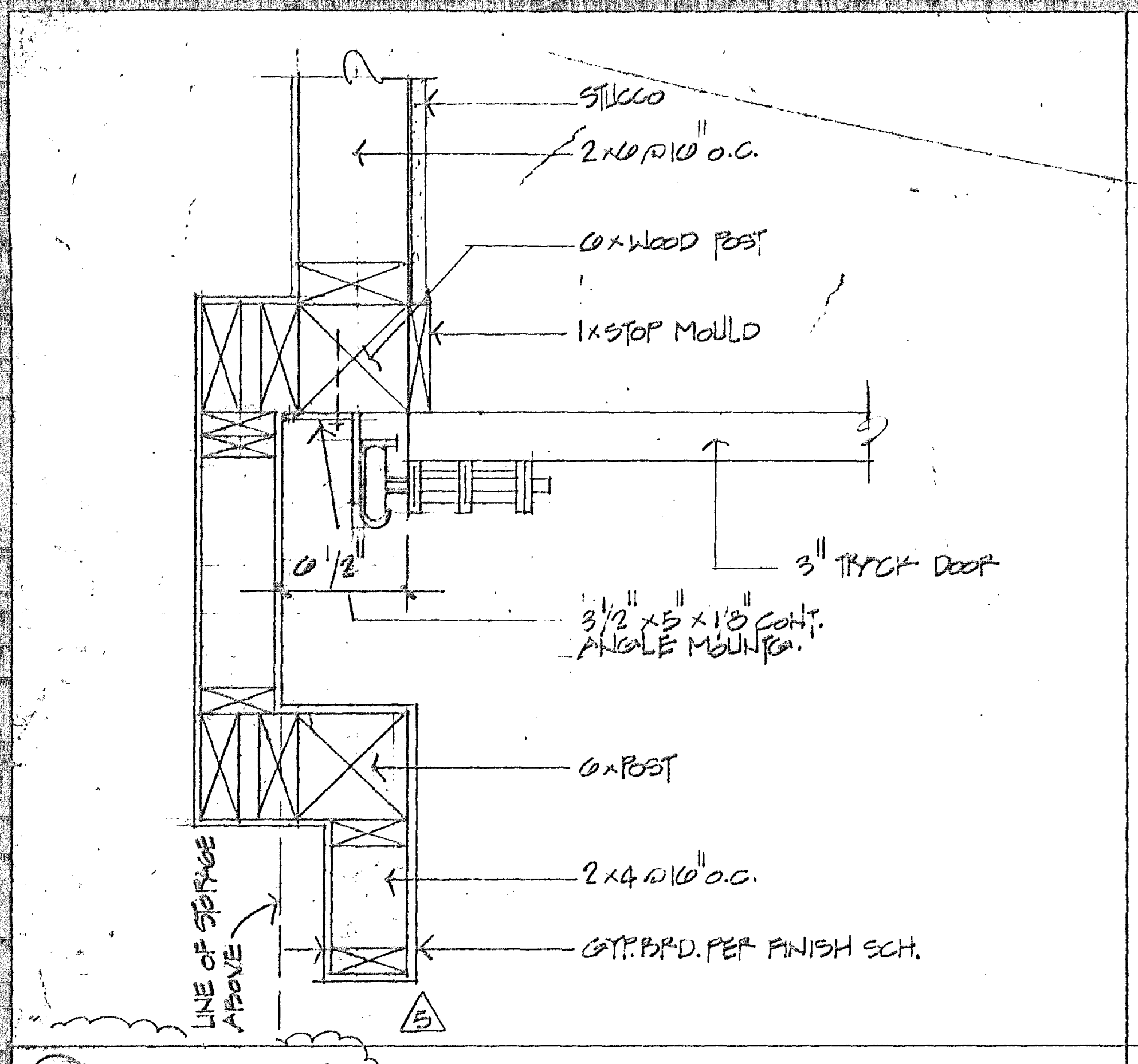
STUCCO
2x6 @16" O.C.
6x WOOD POST
1x STOP MOULD
3" TRACK DOOR
3 1/2 x5 x 1/8 CONT. ANGLE MOUNTING
6 1/2"
6x POST
2x4 @16" O.C.
GYP. BD. PER FINISH SCH.
LINE OF STORAGE ABOVE

③ JAMB DET.

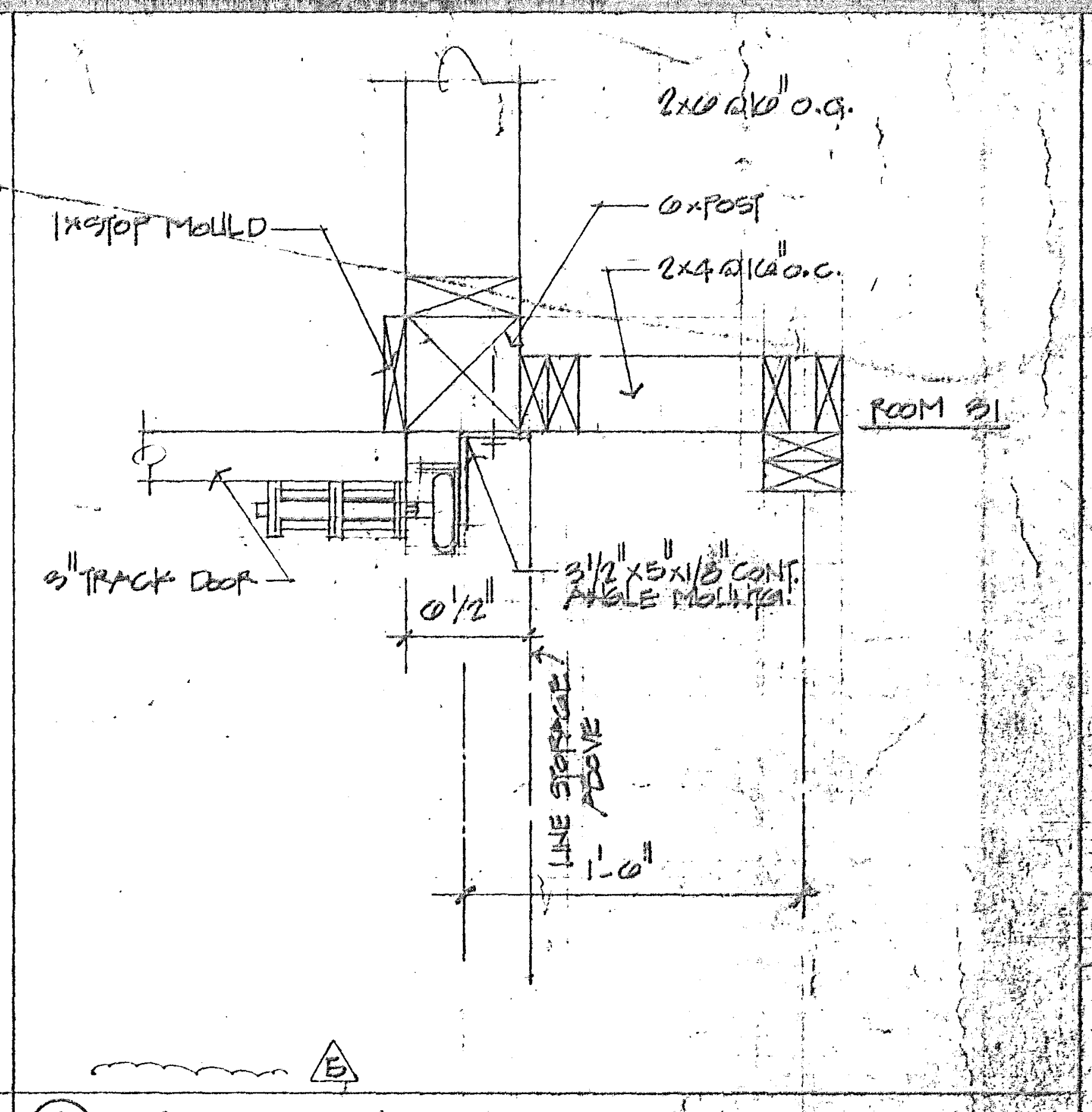
2x6 @16" O.C.
1x STOP MOULD
6x POST
2x4 @16" O.C.
ROOM 31
3" TRACK DOOR
3 1/2 x5 x 5/16 CONT. ANGLE MOUNTING
6 1/2"
LINE OF STORAGE ABOVE
1'-6"

② JAMB DET.

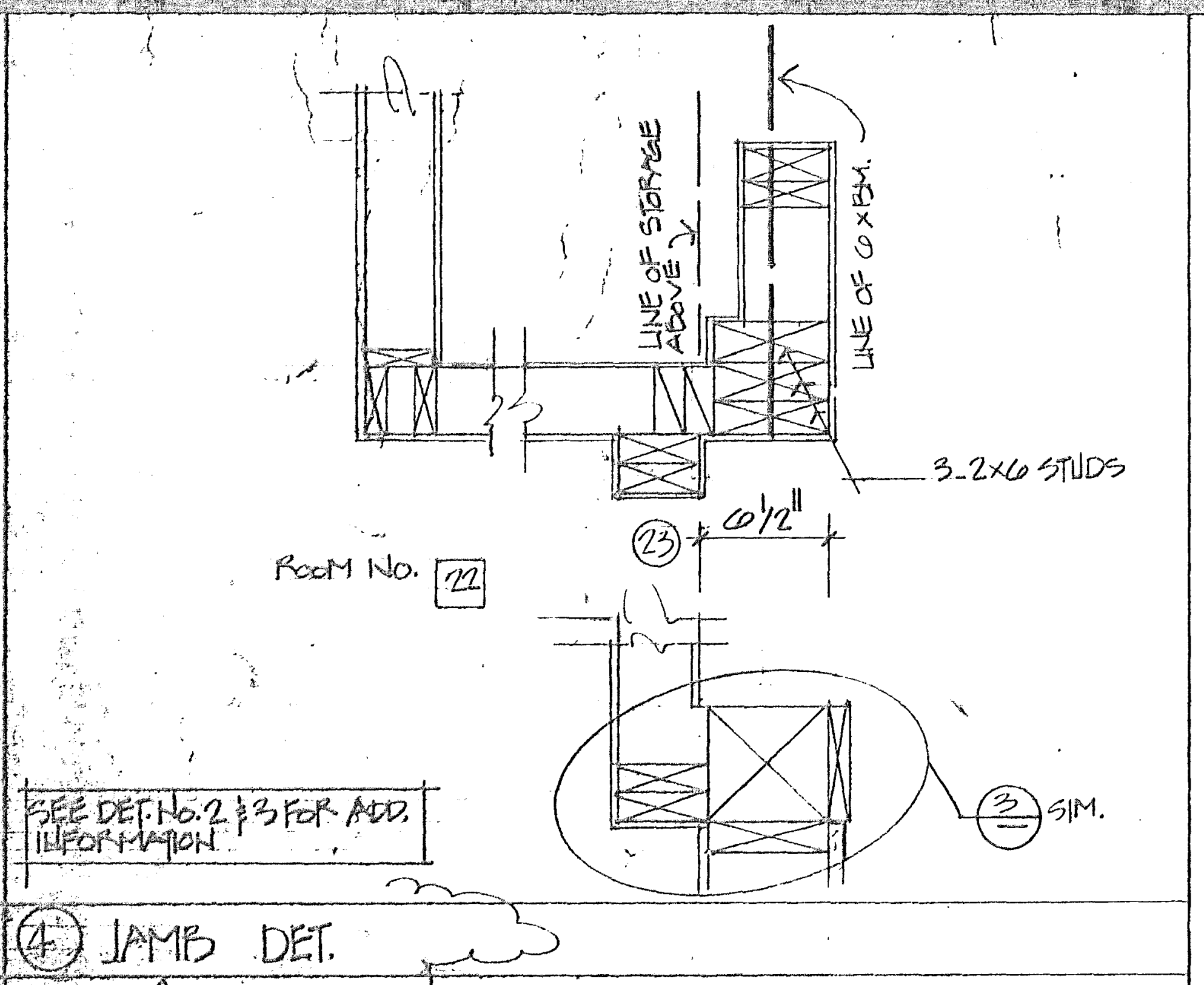
LINE OF STORAGE ABOVE
LINE OF 6x BEAM
3-2x6 STUDS
ROOM No. 22
6 1/2"
SIM.
SEE DET. No. 2 & 3 FOR ADD. INFORMATION

④ JAMB DET.

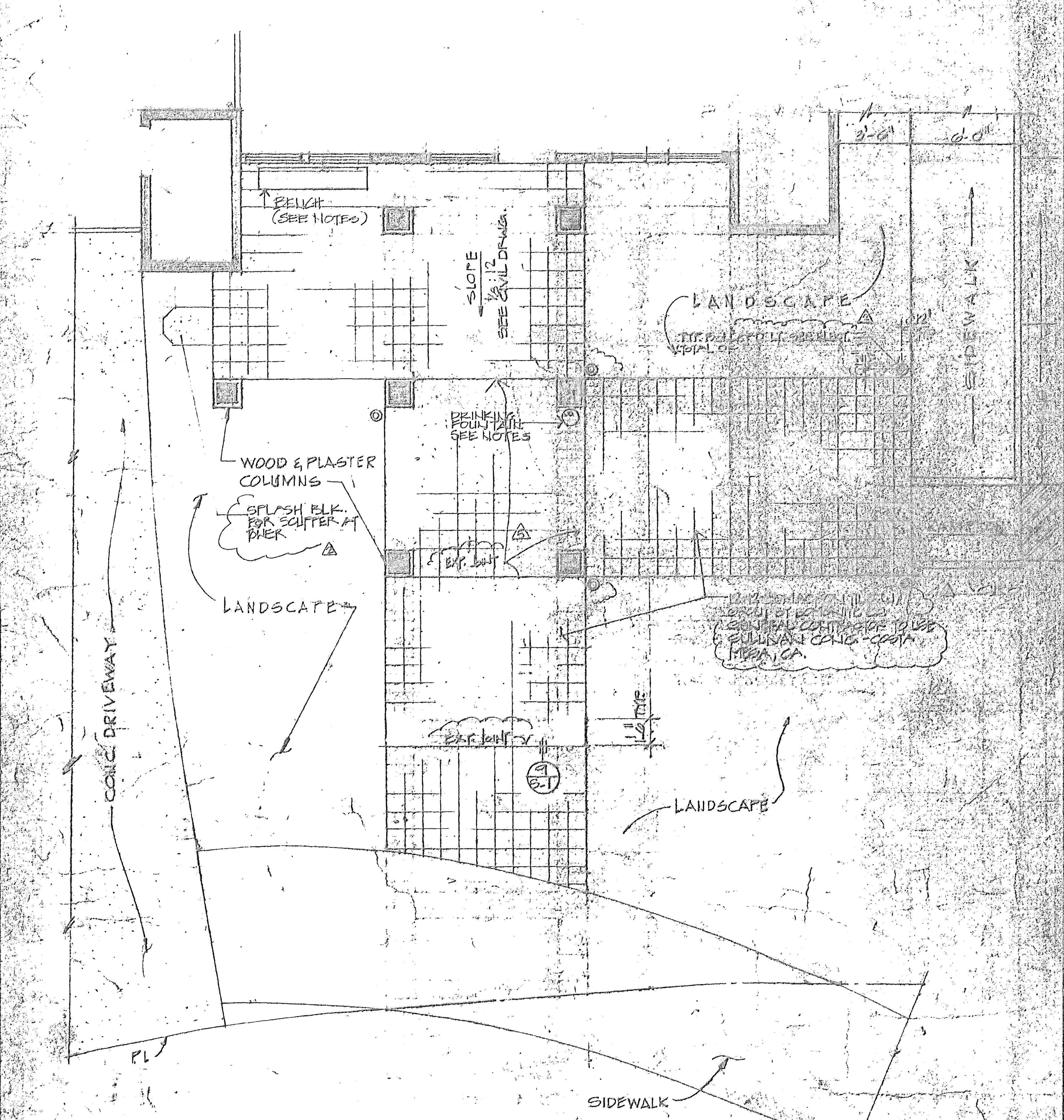
BENCH (SEE NOTES)
SLOPE 1/2" SEE CIVIL DWGS.
LANDSCAPE
SIDEWALK
WOOD & PLASTER COLUMNS
DRINKING FOUNTAIN SEE NOTES
SPLASH BLK. FOR SCUPPER AT BNCH.
LANDSCAPE
CONC. DRIVEWAY
LANDSCAPE
PL
SIDEWALK

NOTES

1. DRINKING FOUNTAIN BY "HAWS DRINKING FAUCET CO" MODEL # 3176 MOUNTED TO COLUMN.
2. BENCHES
FRANCIS ANDREW SERIES NO. 10:3
CUSTOM CAST BENCH, IPE WOOD (BRAZIL WALNUT)
NO ARM PIECES, AVAILABLE FROM PECKS PRODUCT INC.
TEL 714-642-0151

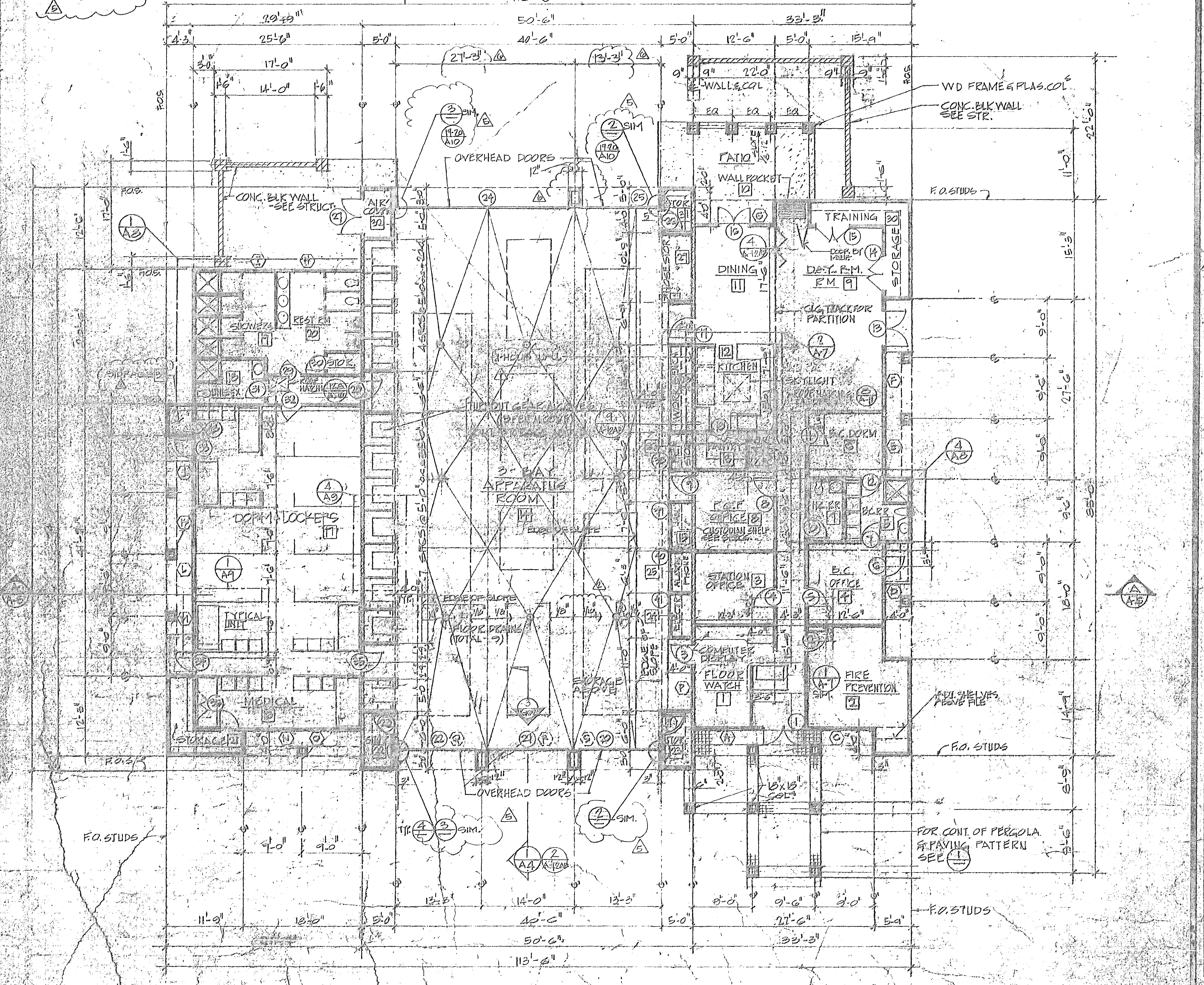
NORTH
113'-6"
29'-9"
50'-6"
33'-3"
25'-6"
40'-6"
12'-6"
15'-9"
17'-0"
14'-0"
OVERHEAD DOORS
CONC. BLK WALL - SEE STRUCT.
WD FRAME & PLAS. COL.
CONC. BLK WALL SEE STR.
PATIO
WALL POCKET
TRAINING
DINING
DAY RM.
STORAGE
SHOWERS
REST RM.
KITCHEN
DORM & LOCKERS
3-BAY APPARATUS ROOM
TYPICAL UNIT
MEDICAL
STORAGE
B.C. DORM
F.C.F. OFFICE
STATION OFFICE
B.C. OFFICE
COMPUTER DISPLAY
FLOOR WATCH
FIRE PREVENTION
F.O. STUDS
FOR CONT. OF PERGOLA & PAVING PATTERN SEE
OVERHEAD DOORS
16"x16" COL.
27'-6"
85'-0"
22'-0"

NOTES

1. ALL STUD WALLS ARE:
2x6 - EXTERIOR
2x4 - INTERIOR

WALL LEGEND

PAVING PATTERN AT ENTRANCE

FLOOR PLAN

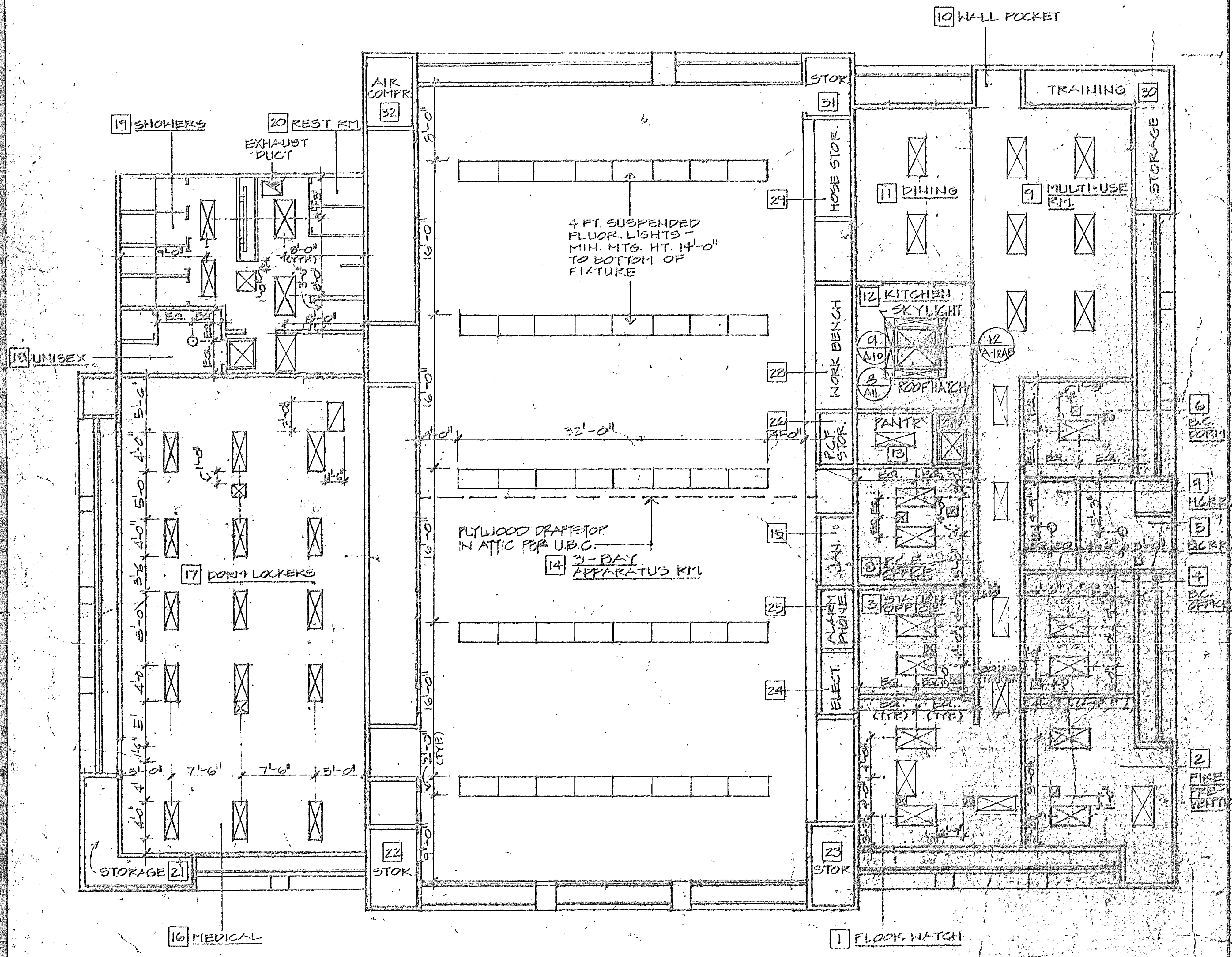
19 SHOWERS
20 REST RM.
EXHAUST DUCT
18 UNISEX
17 DORM LOCKERS
16 MEDICAL
21 STORAGE
22 STOR.
AIR COMPR 32
4 FT. SUSPENDED FLUOR. LIGHTS - MIN. MTG. HT. 14'-0" TO BOTTOM OF FIXTURE
PLYWOOD DRAFTSTOP IN ATTIC PER U.B.C.
14 3-BAY APPARATUS RM.
35'-0"
10 WALL POCKET
STOR. 31
TRAINING 30
STORAGE
27 HOSE STOR.
11 DINING
9 MULTI-USE RM.
12 KITCHEN
SKYLIGHT
ROOF HATCH
22 WORK BENCH
13 PANTRY
15
25
24 ELECT.
6
5
4
2 FIRE PREVENTION
23 STOR.
1 FLOOR HATCH
A A-5

REFLECTED CEILING PLAN

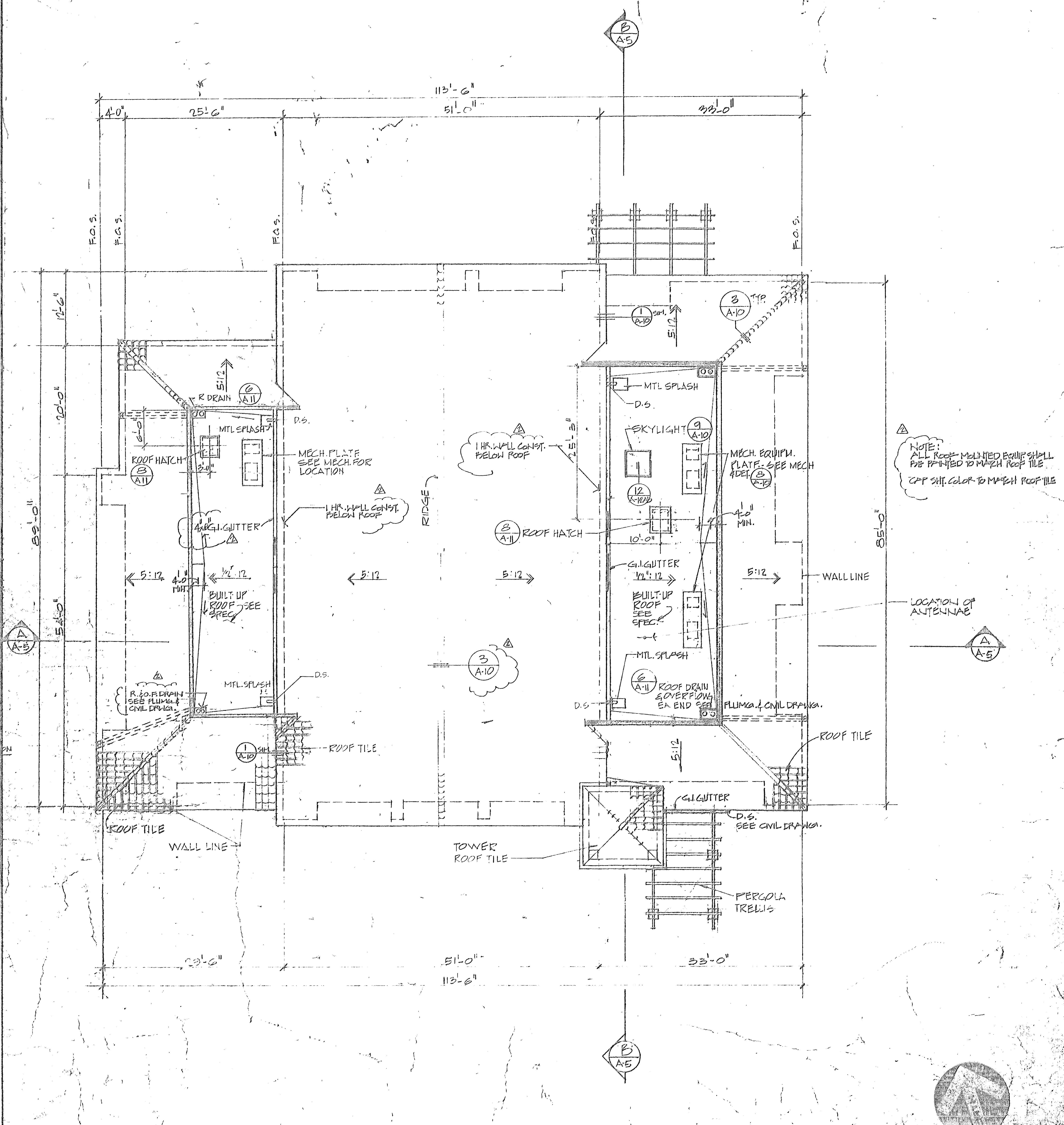
B A-5
113'-6"
4'-0"
25'-6"
51'-0"
33'-0"
F.O.S.
12'-6"
20'-0"
85'-0"
54'-0"
R. DRAIN
8 A-11 ROOF HATCH
MTL. SPLASH
MECH. PLATE SEE MECH. FOR LOCATION
1 HR. WALL CONST. BELOW ROOF
4" G.I. GUTTER
5:12
1/4":12
BUILT UP ROOF SEE SPEC.
R.D.O.F. DRAIN SEE PLUMB. & CIVIL DRWGS.
D.S.
ROOF TILE
WALL LINE
RIDGE
3 A-10
TOWER ROOF TILE
SKYLIGHT
MECH. EQUIPM. PLATE - SEE MECH. 8 A-11
ROOF HATCH
10'-0"
4'-0" MIN.
G.I. GUTTER
6 A-11 ROOF DRAIN & OVERFLOW EA. END SEE PLUMB. & CIVIL DRWGS.
LOCATION OF ANTENNAE
NOTE: ALL ROOF-MOUNTED EQUIP. SHALL BE PAINTED TO MATCH ROOF TILE
OFF SHT. COLOR TO MATCH ROOF TILE
G.I. GUTTER
D.S. SEE CIVIL DRWGS.
PERGOLA TRELLIS
A A-5

ROOF PLAN

Project No.
Designer
Drawn by
Date 11-21-89 AS BUILT
Scale
Revisions

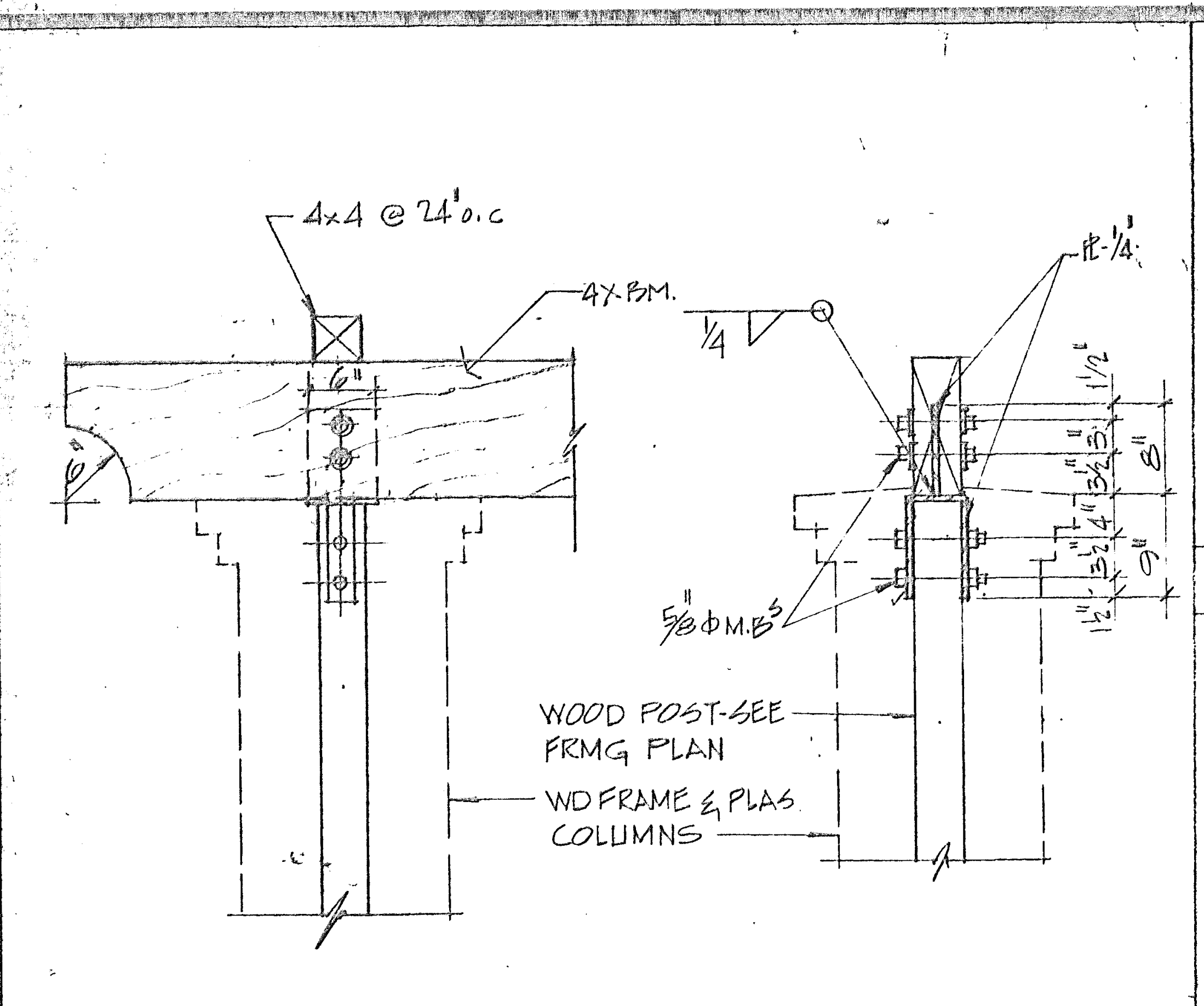
4x4 @ 24" o.c.
4X BM.
1/4
1-1/4"
5/8" ϕ M.B.
WOOD POST-SEE FRMG PLAN
WD FRAME & PLAS COLUMNS

PATIO AND PERGOLA BM TO POST CONN 1"=1'-0" (4)

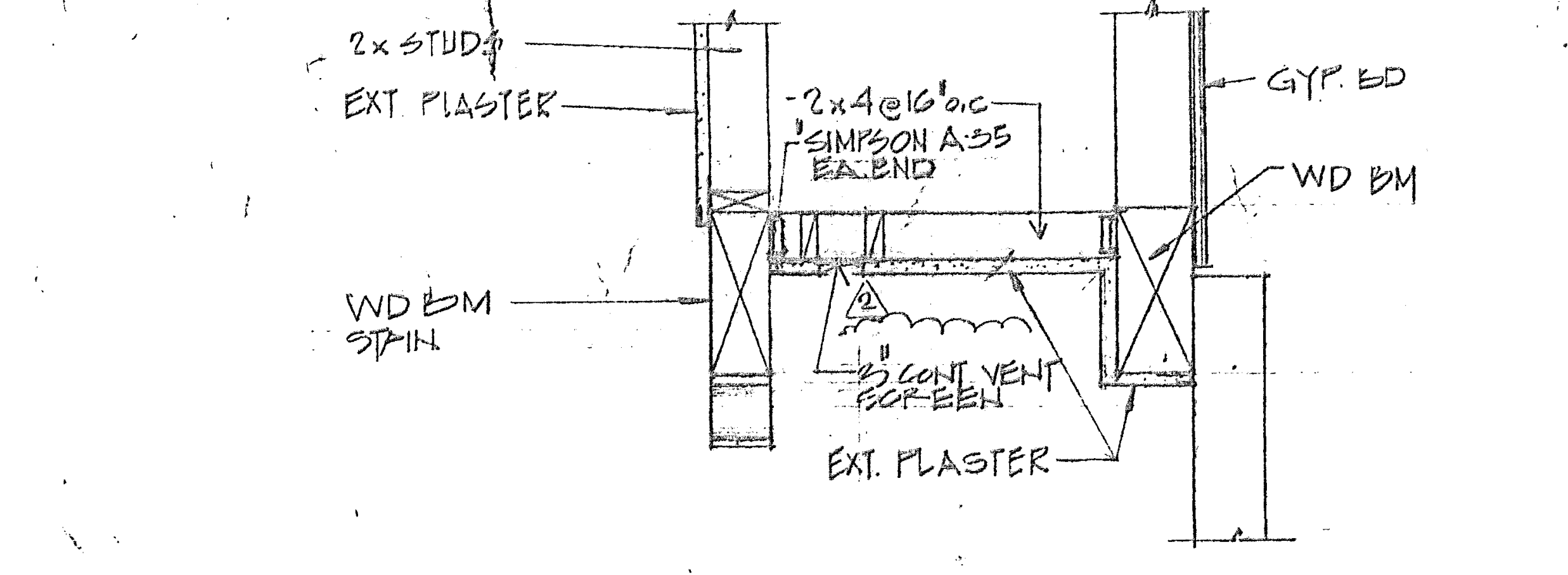
2x STUDS
EXT. PLASTER
2x4 @ 16" o.c.
SIMPSON A35 EA. END
GYP. BD
WD BM
WD BM STAIN
3" CONT VENT SCREEN
EXT. PLASTER

SOFFIT DETAIL SCALE: 1"=1'-0" (3)

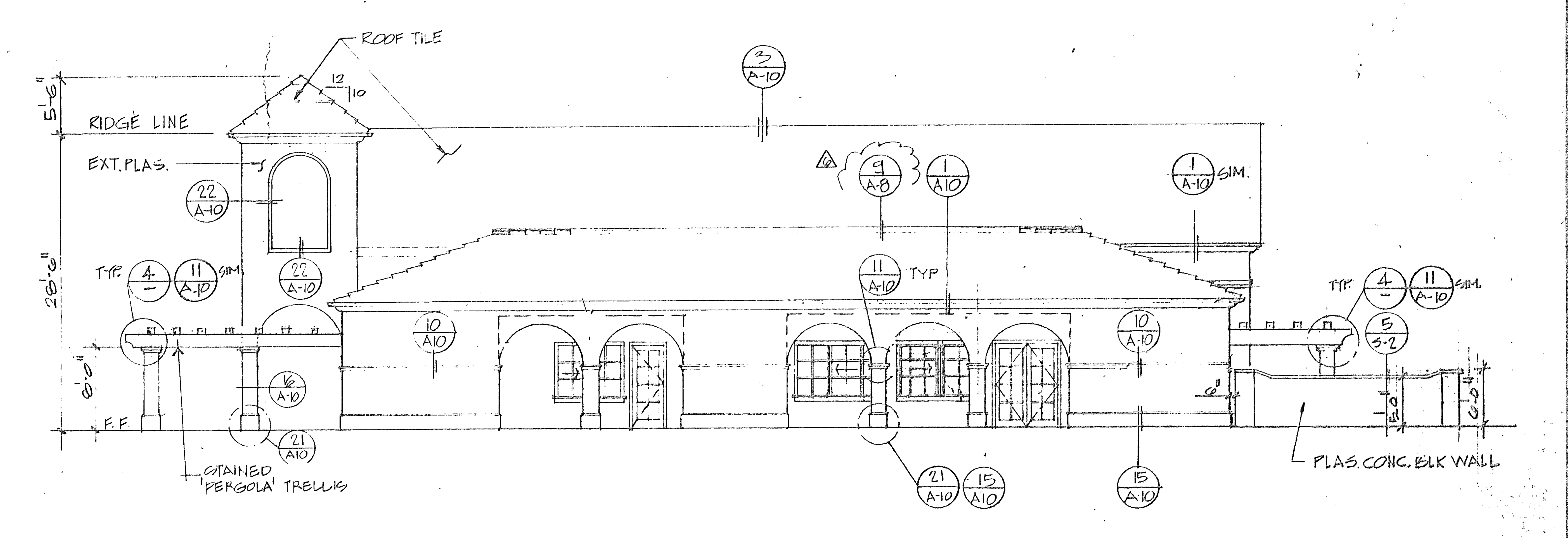
ROOF TILE
RIDGE LINE
5'-6"
12
10
EXT. PLAS.
22 / A-10
3 / A-10
9 / A-8
1 / A-10
1 / A-10 SIM.
TYP. 4 / — 11 / A-10 SIM.
11 / A-10 TYP
10 / A-10
16 / A-10
21 / A-10
21 / A-10
15 / A-10
15 / A-10
5 / S-2
26'-0"
F.F.
STAINED PERGOLA TRELLIS
PLAS. CONC. BLK WALL

EAST ELEVATION SCALE: 1/8"=1'-0"

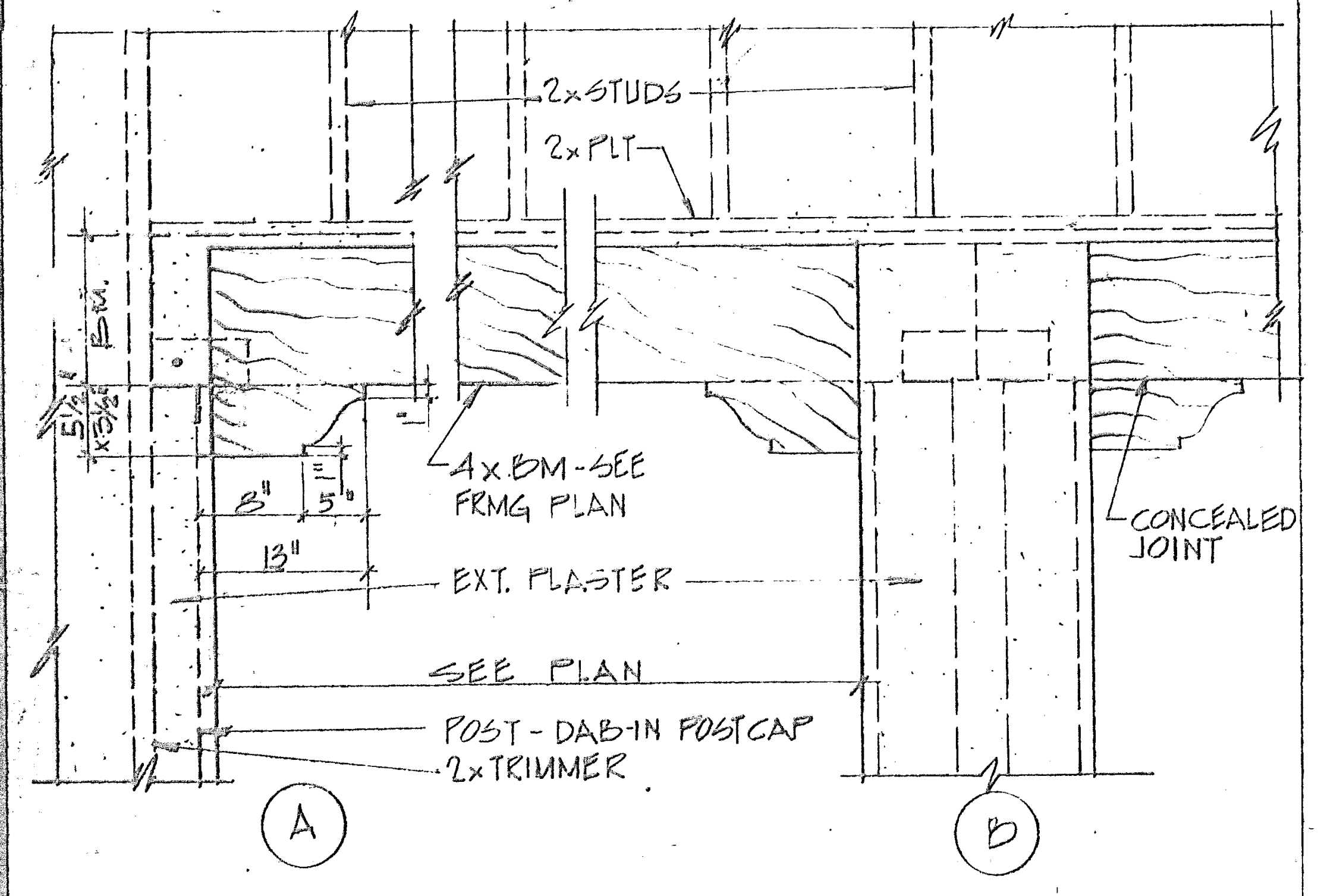
2x STUDS
2x PLT
4x BM-SEE FRMG PLAN
CONCEALED JOINT
13"
EXT. PLASTER
SEE PLAN
POST-DAB IN POSTCAP
2x TRIMMER
A
B

SOFFIT BEAM AT NORTHWALL 1"=1'-0" (5)

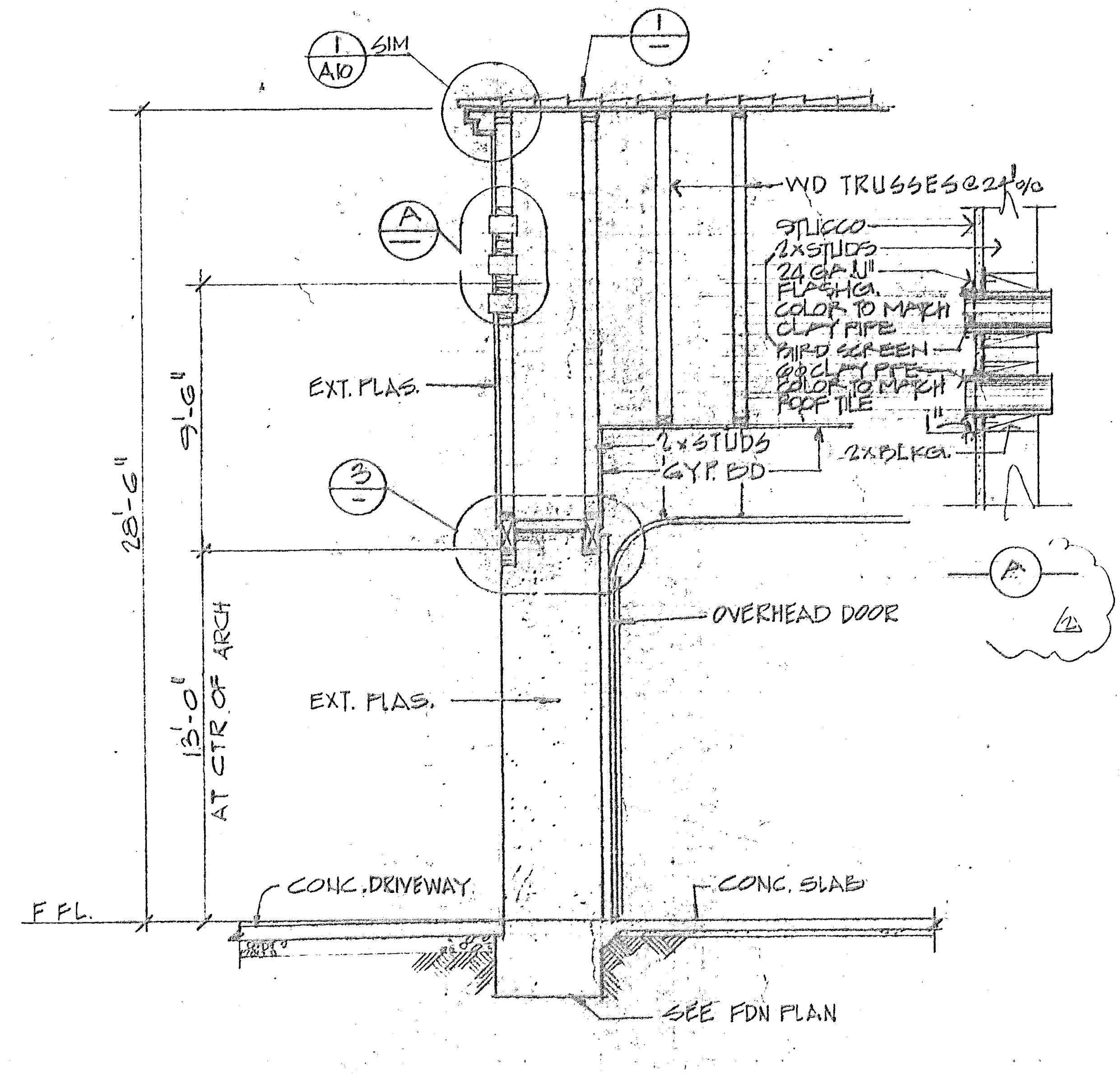
1 / A-10 SIM
1 / —
A
3 / —
WD TRUSSES @ 24" o/c
STUCCO
2x STUDS
24 GA. "J" FLASHG. COLOR TO MATCH CLAY PIPE
BIRD SCREEN
4" ϕ CLAY PIPE COLOR TO MATCH ROOF TILE
2x STUDS
GYP. BD
2x BLKG.
A
2
EXT. PLAS.
9'-6"
28'-6"
15'-0" AT CTR OF ARCH
OVERHEAD DOOR
CONC. DRIVEWAY
CONC. SLAB
F.FL.
SEE FDN PLAN

SECTION AT NORTH WALL 1/4"=1'-0" (2)

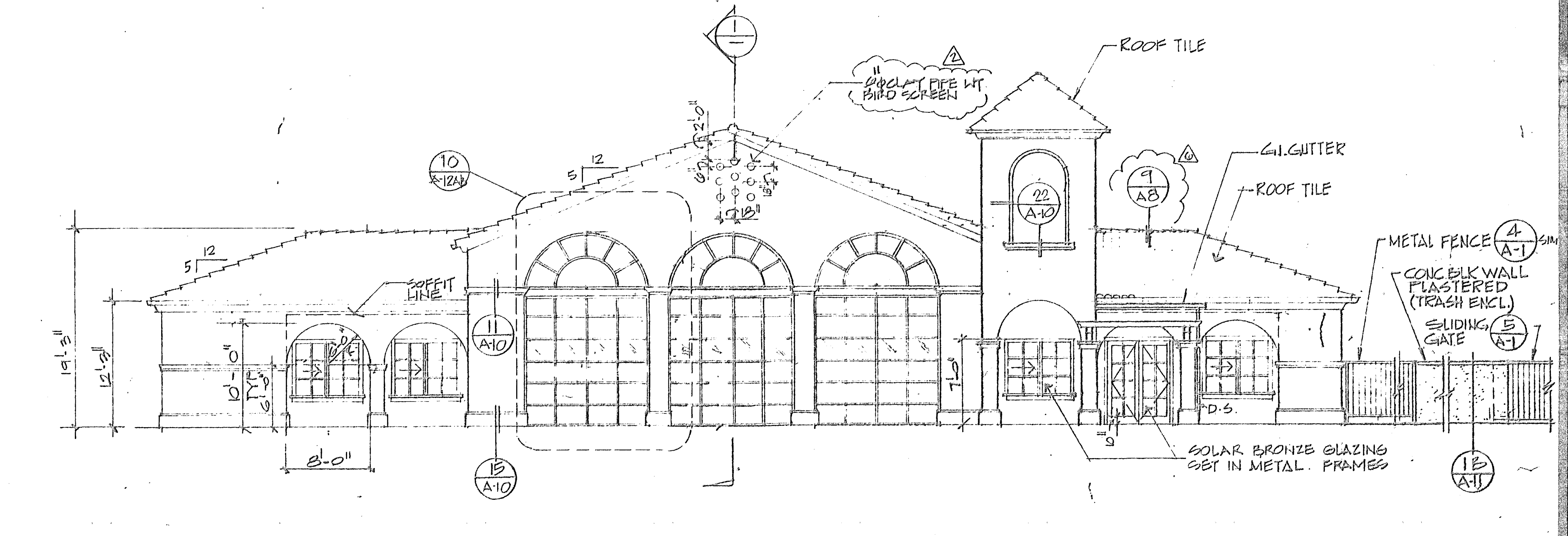
1 / —
4" ϕ CLAY PIPE W/ BIRD SCREEN
2
ROOF TILE
10 / A-12A
12
5
SOFFIT LINE
11 / A-10
22 / A-10
9 / A8
G.I. GUTTER
ROOF TILE
METAL FENCE 4 / A-1 SIM
CONC. BLK WALL PLASTERED (TRASH ENCL.)
SLIDING GATE 5 / A-1
19'-3"
12'-6"
10'-0"
6'-8"
8'-0"
7'-0"
15 / A-10
D.S.
SOLAR BRONZE GLAZING SET IN METAL FRAMES
1B / A-11

SOUTH ELEVATION SCALE: 1/8"=1'-0"

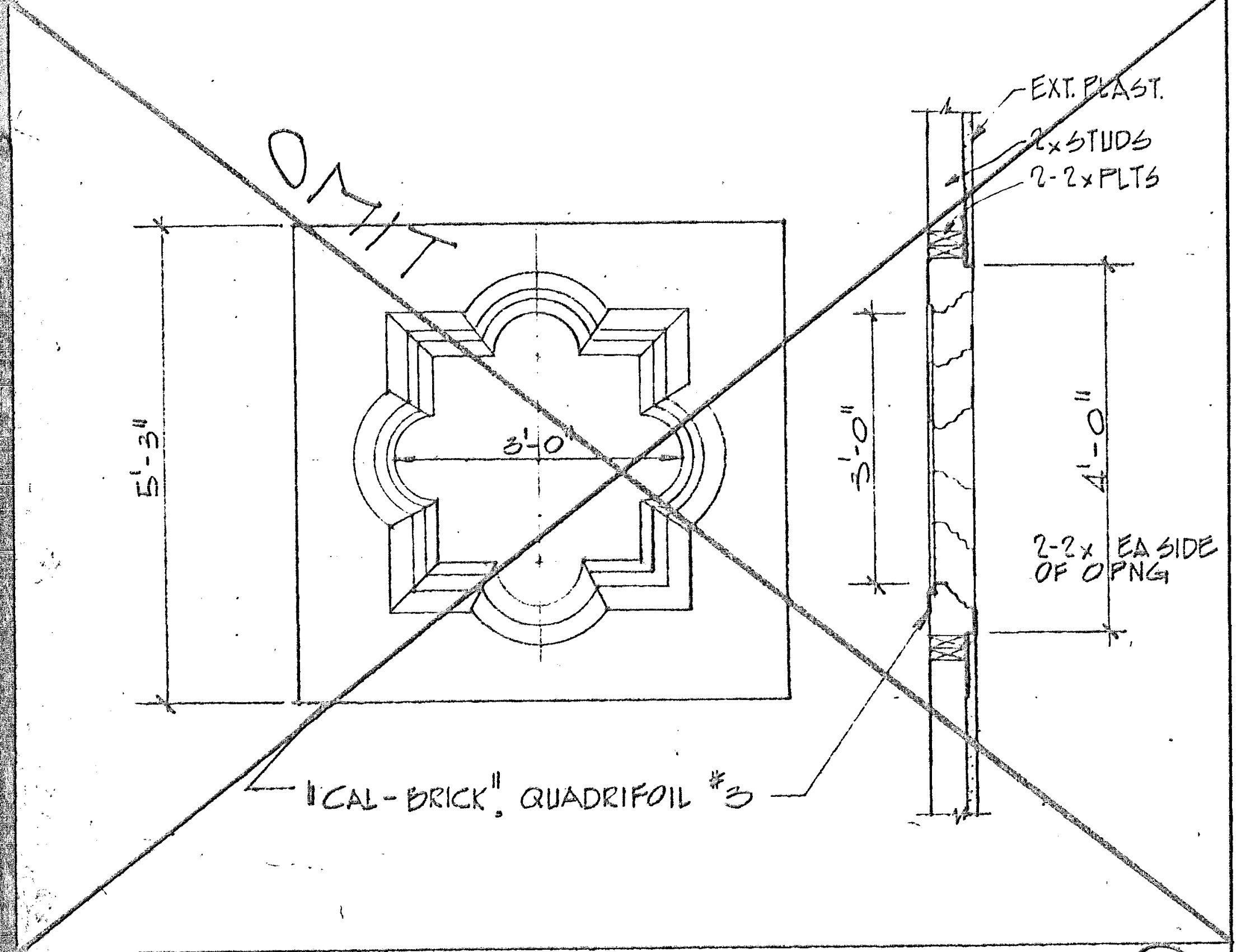
OMIT
5'-3"
3'-0"
3'-0"
4'-0"
EXT. PLAST.
2x STUDS
2-2x PLTS
2-2x EA SIDE OF OPNG
"CAL-BRICK" QUADRIFOIL #3

QUADRIFOIL WINDOW NO SCALE (6)

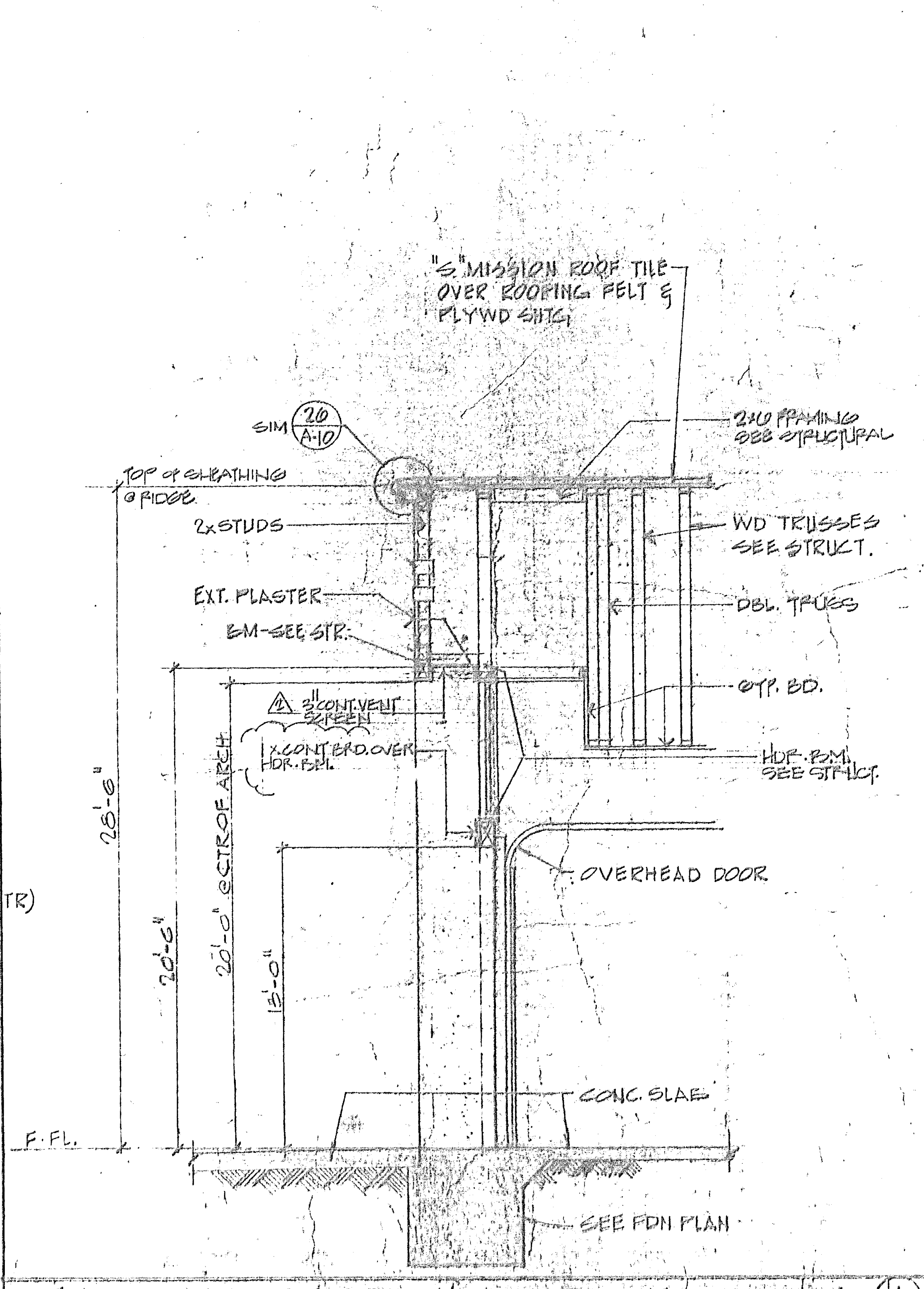
"S" MISSION ROOF TILE OVER ROOFING FELT & PLYWD SHTG.
SIM 26 / A-10
2x6 FRAMING SEE STRUCTURAL
TOP OF SHEATHING @ RIDGE
2x STUDS
WD TRUSSES SEE STRUCT.
EXT. PLASTER
DBL. TRUSS
BM-SEE STR.
GYP. BD.
1 3" CONT. VENT SCREEN
1x CONT. BRD. OVER HDR. BM.
HDR. BM. SEE STRUCT.
28'-6"
20'-0" @ CTR OF ARCH
15'-0"
OVERHEAD DOOR
CONC. SLAB
F.FL.
SEE FDN PLAN

END WALL SECTION (AT RIDGE) 1/4"=1'-0" (1)

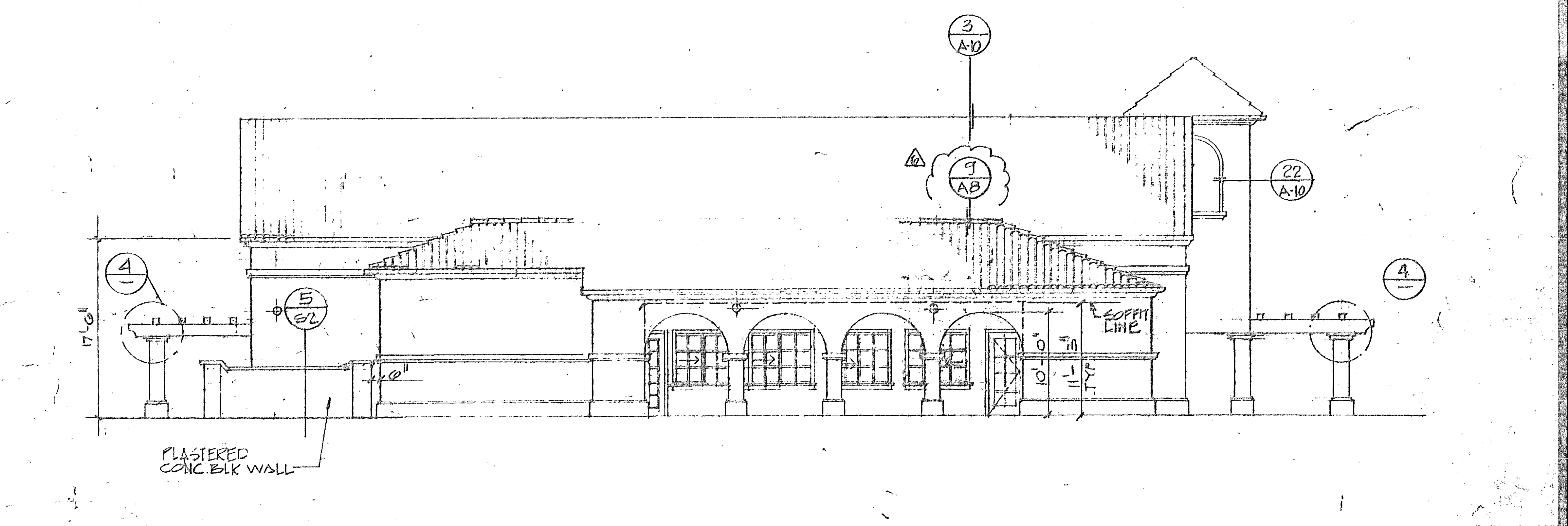
3 / A-10
9 / A8
22 / A-10
4 / —
4 / —
5 / S2
17'-6"
SOFFIT LINE
PLASTERED CONC. BLK WALL

WEST ELEVATION SCALE: 1/8"=1'-0"

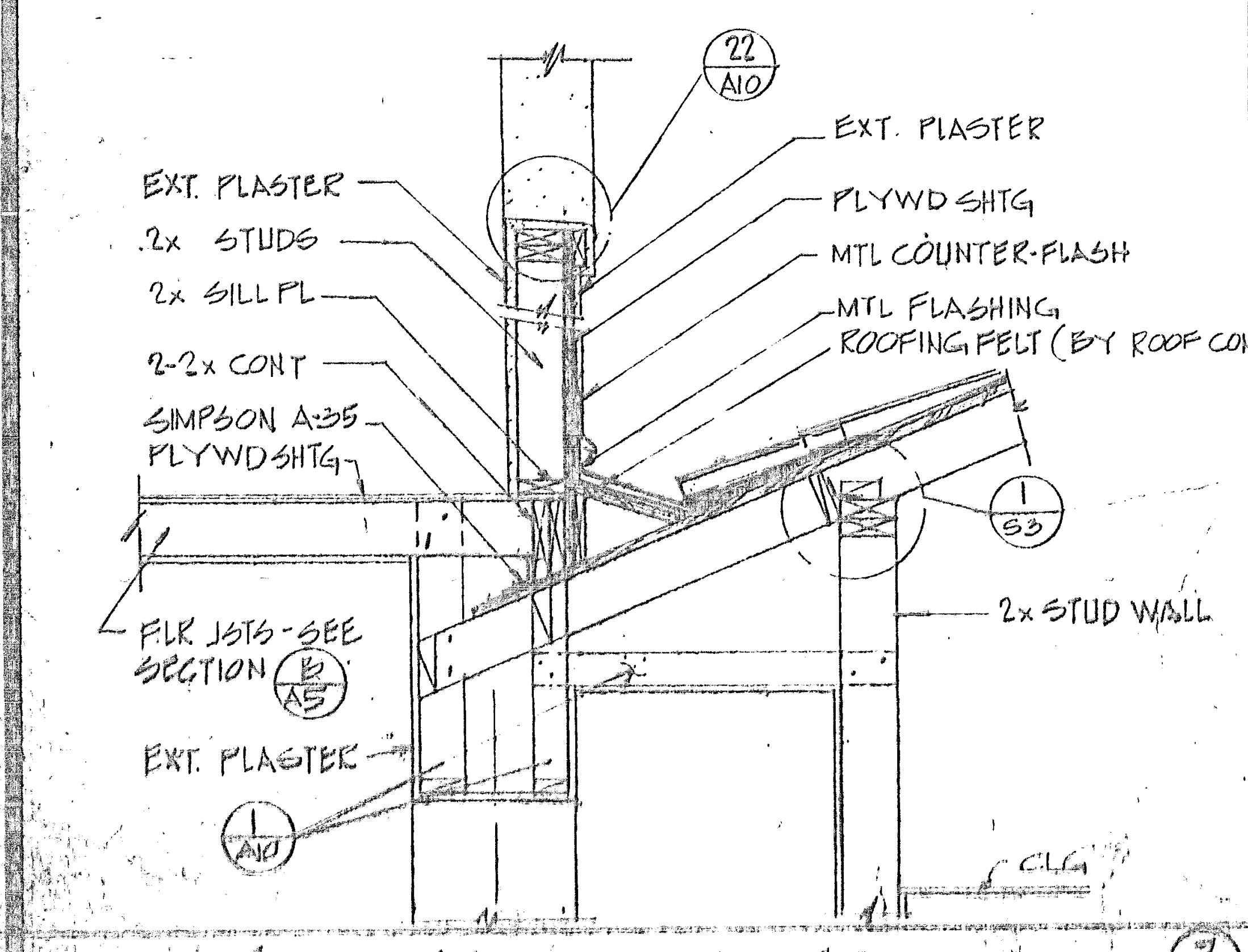
22 / A10
EXT. PLASTER
EXT. PLASTER
2x STUDS
PLYWD SHTG
2x SILL PL
MTL COUNTER-FLASH
MTL FLASHING
ROOFING FELT (BY ROOF CONTR)
2-2x CONT
SIMPSON A35
PLYWD SHTG.
1 / S3
2x STUD WALL
FLR JSTS-SEE SECTION 16 / A5
EXT. PLASTER
1 / A10
CLG

SOFIT DETAIL AT TOWER (7)

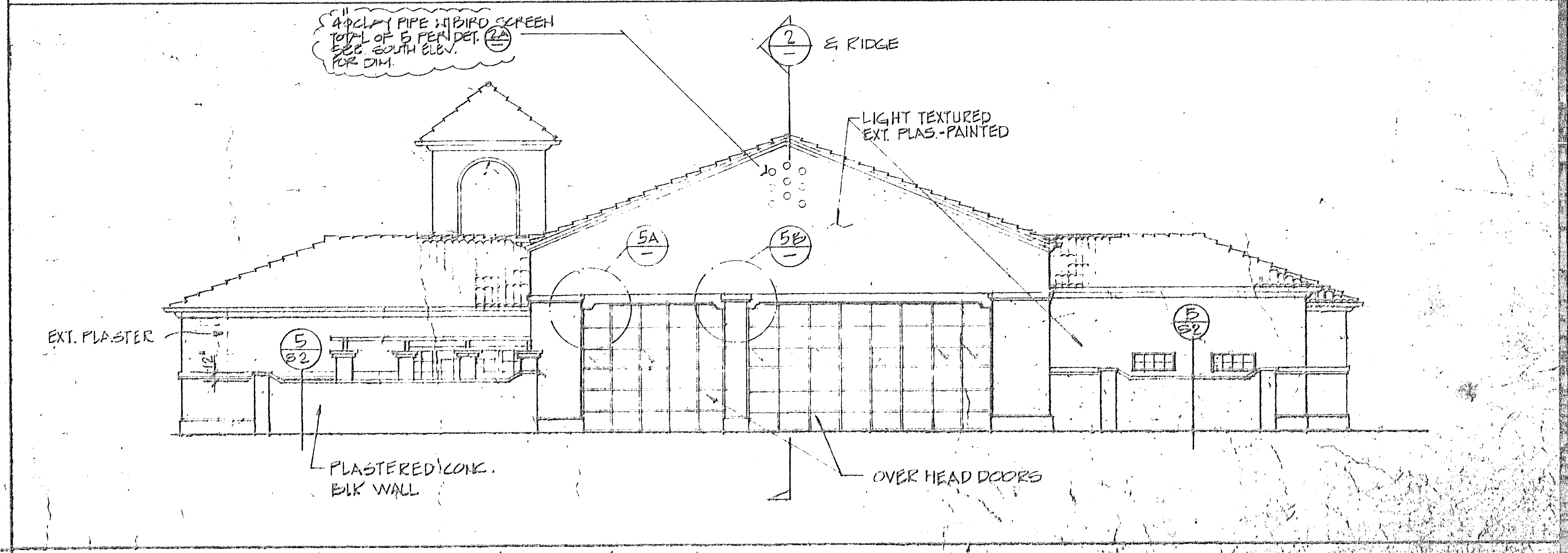
4" ϕ CLAY PIPE W/ BIRD SCREEN TOTAL OF 5 PER DET. 2A SEE SOUTH ELEV. FOR DIM.
2 / —
℄ RIDGE
LIGHT TEXTURED EXT. PLAS.-PAINTED
5A / —
5B / —
EXT. PLASTER
5 / S2
5 / S2
PLASTERED CONC. BLK WALL
OVER HEAD DOORS

NORTH ELEVATION SCALE: 1/8"=1'-0"

Project No.
Designer
Drawn by
Date 11-1-89 AS BUILT
Scale
Revisions

PLAN NO. 9072

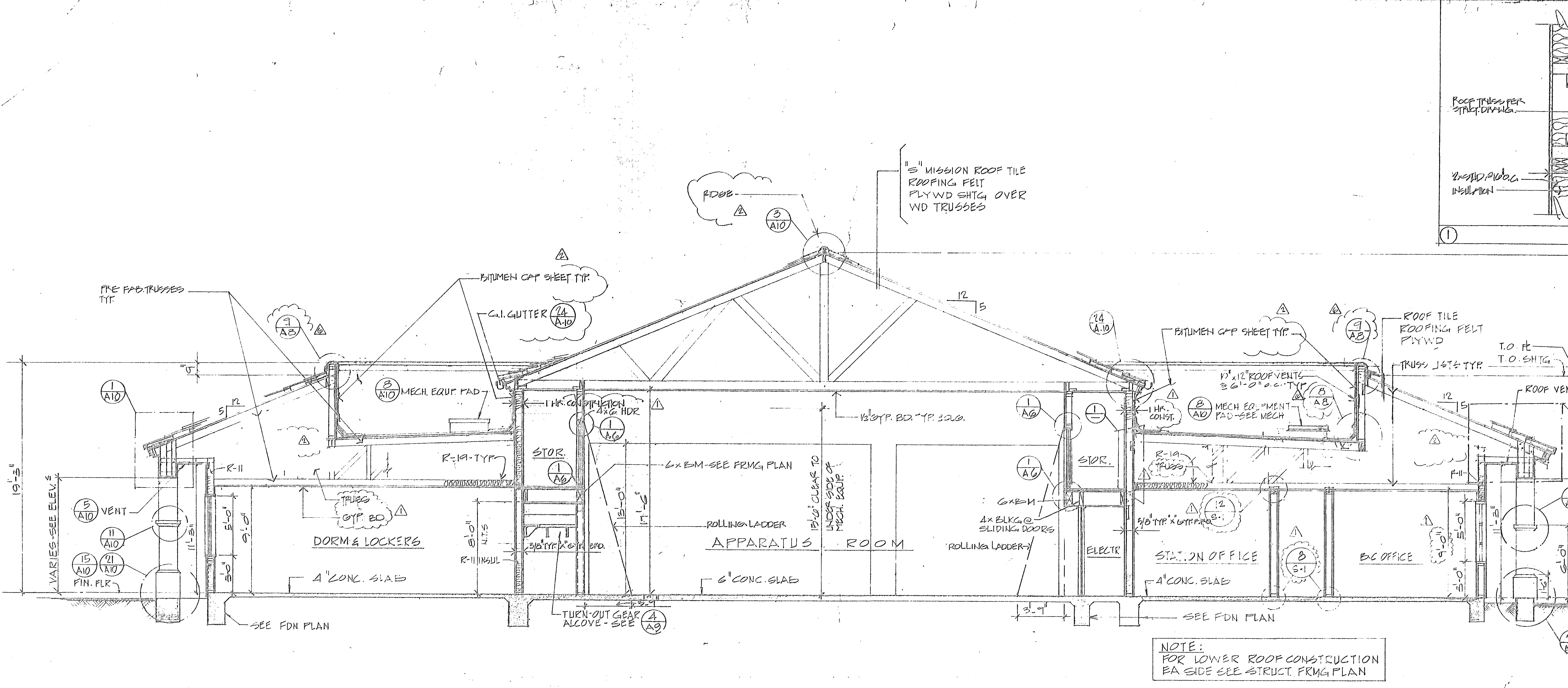
PLYWOOD SHTG.
ROOF TRUSS PER STRUCT. DRAWG.
2x STUD @ 16" O.C.
INSULATION
5/8" TYP "X" GYP BRD.
GYP BRD SCH.
PLYWD PER STRUCT.
1
RIDGE
2
3 A10
"S" MISSION ROOF TILE
ROOFING FELT
PLYWD SHTG OVER
WD TRUSSES
12 5
PRE FAB. TRUSSES TYP.
9 A8
6
BITUMEN CAP SHEET TYP.
G.I. GUTTER 24 A-10
1 A10
8 A10 MECH. EQUIP. PAD
1 HR. CONSTRUCTION
4x6 HDR
1 A6
5 12
R-11
R-19-TYP
STOR.
6x BM-SEE FRMG PLAN
1/2" GYP. BD. TYP. CLG.
15'-0" CLEAR TO UNDERSIDE OF MECH. EQUIP.
13'-0"
17'-6"
TRUSS
GYP. BD.
5 A10 VENT
11 A10
15 A10
21 A10
FIN. FLR
VARIES-SEE ELEV.'S
19'-3"
5'-0"
9'-0"
3'-0"
11'-3"
8'-0"
N.T.S
DORM & LOCKERS
R-11 INSUL
5/8" TYP "X" GYP. BRD.
ROLLING LADDER
APPARATUS ROOM
4" CONC. SLAB
6" CONC. SLAB
SEE FDN PLAN
TURN-OUT GEAR ALCOVE - SEE 4 A9
3'-9"
6x BM
4x BLKG @ SLIDING DOORS
ROLLING LADDER
STOR.
ELECTR
24 A-10
1 HR. CONST.
10" x 12" ROOF VENTS @ 6'-0" o.c. TYP
8 A10 MECH EQUIPMENT PAD-SEE MECH
8 A8
R-19 TRUSS
5/8" TYP "X" GYP. BRD.
12 S-1
STATION OFFICE
8 S-1
B.C OFFICE
9'-0"
ROOF TILE
ROOFING FELT
PLYWD
TRUSS JSTS TYP.
T.O. PL
T.O. SHTG
ROOF VENT 5 A-10 SIM.
1 A10
R-11
11 A10
28'-6"
19'-3"
21 A10
SEE FDN PLAN

NOTE:
FOR LOWER ROOF CONSTRUCTION
EA SIDE SEE STRUCT. FRMG PLAN

BUILDING SECTION

SCALE: 1/4"=1'-0" (A)

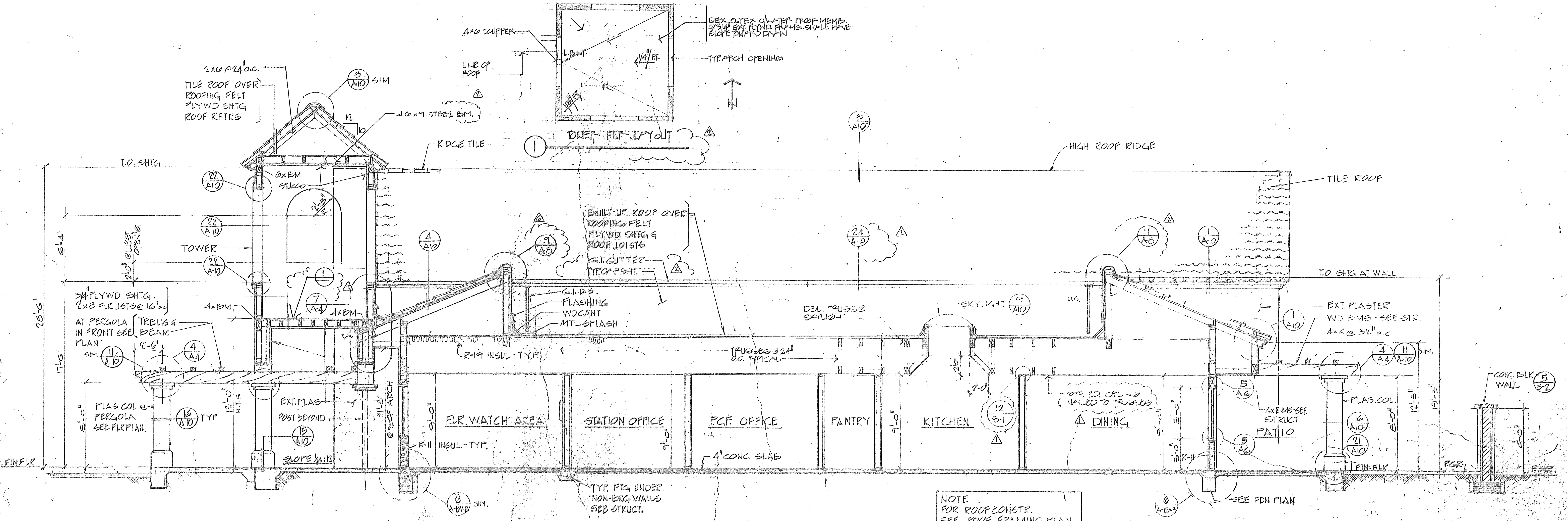
EQ.
EQ.
4x6 SCUPPER
LINE OF ROOF
L.BINT.
1/4"/FT.
1/8"/FT.
DEX-O-TEX O/WATER PROOF MEMB. O/3/4" EXT. PLYWD. FRAMG. SHALL HAVE SLOPE TOWARD DRAIN
TYP. ARCH OPENING
N
1 TOWER FLR. LAYOUT
2x6 @ 24" o.c.
TILE ROOF OVER
ROOFING FELT
PLYWD SHTG
ROOF RFTRS
3 A10 SIM
12 10
W6x9 STEEL BM.
RIDGE TILE
T.O. SHTG
22 A10
6x BM
STUCCO
2'-8" R.
22 A-10
TOWER
22 A-10
6'-4"
2'-0" @ WEST OPEN'G
28'-6"
3/4" PLYWD SHTG.
2x8 FLR JSTS @ 16" o.c.
4x BM
7 A-4
4x BM
AT PERGOLA IN FRONT SEE PLAN
TRELLIS & BEAM
SIM. 11 A-10
2'-6"
4 A4
17'-6"
8'-0"
PLAS COL @ PERGOLA SEE FLR PLAN.
16 A10 TYP
12'-0"
N.T.S
EXT. PLAS
POST BEYOND
15 A10
SLOPE 1/8:12
11'-3"
@ E OF ARCH
FIN. FLR
4 A10
9 A8
R-19 INSUL-TYP.
R-11 INSUL.-TYP.
6 A-12AB SIM.
BUILT-UP ROOF OVER
ROOFING FELT
PLYWD SHTG &
ROOF JOISTS
G.I. GUTTER
TYP. CAP SHT.
G.I.D.S.
FLASHING
WD CANT
MTL. SPLASH
TRUSSES @ 24" O.C. TYPICAL
FLR. WATCH AREA
STATION OFFICE
P.C.F. OFFICE
PANTRY
KITCHEN
DINING
9'-0"
4" CONC. SLAB
TYP. FTG UNDER NON-BRG WALLS SEE STRUCT.
3 A10
HIGH ROOF RIDGE
TILE ROOF
24 A-10
DBL. TRUSS @ SKYLIGHT
SKYLIGHT 9 A10
2'-0"
2'-0"
12 S-1
GYP. BD. CEILING NAILED TO TRUSSES
9 A8
1 A-10
D.S.
T.O. SHTG AT WALL
EXT. PLASTER
WD BMS - SEE STR.
4x4 @ 32" o.c.
1 A10
4 A-4
11 A-10 SIM.
5 A6
4x BMS-SEE STRUCT.
PATIO
5 A6
R-11
PLAS. COL.
16 A10
21 A10
FIN. FLR
12'-3"
19'-3"
8'-0"
6 A-12AB
SEE FDN PLAN
CONC. BLK WALL 5 S-2
F.GR.
F.GR.

NOTE:
FOR ROOF CONSTR.
SEE ROOF FRAMING PLAN

BUILDING SECTION

SCALE: 1/4"=1'-0" (B)

Project No.
Designer
Drawn by
Date 11-1-89
Scale
Revisions
Sheet

PLAN NO. 90781-1703

DOOR SCHEDULE

NO.	SIZE (WxH)	THK.	TYPE	DOOR MAT'L	FRAME MAT'L	DETAILS	HDWR.	REMARKS
①	3'-0" x 8'-0"	—	A	ALUM. STOREFRONT		7 & 8-A-6		
2	3'-0" x 7'-0"	1 3/4"	B	S.C.	STL.	4-A-6		
3	3'-0" x 7'-0"	1 3/4"	C	S.C.	STL.	4-A-6		1-HOUR RATED △1
4	3'-0" x 7'-0"	1 3/4"	B	S.C.	STL.	4-A-6		
5	3'-0" x 7'-0"	1 3/4"	B	S.C.	STL.	4-A-6		
6	3'-0" x 8'-0"	—	A	ALUM. STOREFRONT		7 & 8-A-6		
7	3'-0" x 7'-0"	1 3/4"	B	S.C.	STL.	4-A-6		
8	3'-0" x 7'-0"	1 3/4"	B	S.C.	STL.	4-A-6		
9	3'-0" x 7'-0"	1 3/4"	C	S.C.	STL.	4-A-6		1-HOUR RATED △1
10	3'-0" x 7'-0"	1 3/4"	B	S.C.	STL.	4-A-6		
11	3'-0" x 7'-0"	1 3/4"	B	S.C.	STL.	4-A-6		
12	3'-0" x 7'-0"	1 3/4"	B	S.C.	STL.	4-A-6		
13	6'-0" x 8'-0" (PAIR)	—	A	ALUM. STOREFRONT		8-A-6 7 SIM		
14	5'-0" x 7'-0" (PAIR)	1 3/4"	B	S.C.	STL.	4-A-6		
15	5'-0" x 7'-0" (PAIR)	1 3/4"	B	S.C.	STL.	4-A-6		
16	6'-0" x 8'-0" (PAIR)	—	A	ALUM. STOREFRONT		8-A-6 7 SIM		
17	3'-0" x 7'-0"	1 3/4"	C	S.C.	STL.	4-A-6		1-HOUR RATED △1
18	2'-6" x 7'-0"	1 3/4"	B	S.C.	STL.	4-A-6		
19	3'-0" x 7'-0" △5	1 3/4"	B	S.C.	STL.	4-A-6		
20	12'-0" x 13'-0"	—	D	MET./GLASS	METAL		BY MANU.	SECTIONAL ROLL-UP DOOR
21	12'-0" x 13'-0"	—	D	MET./GLASS	METAL		BY MANU.	SECTIONAL ROLL-UP DOOR
22	12'-0 x 13'-0"	—	D	MET./GLASS	METAL		BY MANU.	SECTIONAL ROLL-UP DOOR
23	3'-0" x 7'-0" △5	1 3/4"	B	S.C.	WOOD	4-A-6		
24	26'-0" x 13'-0"	—	D	MET./GLASS	METAL		BY MANU.	TELESCOPE DOOR △5
25	12'-0" x 13'-0"	—	D	MET./GLASS	METAL		BY MANU.	" "
26	3'-0" x 7'-0"	1 3/4"	B	S.C.	WOOD	4-A-6		
27	5'-0" x 8'-0" (PAIR)	1 3/4"	B	H.M.	H.M.	4-A-6 SIM		PROVIDE FULL LOUVERS EA. DOOR
28	3'-0" x 7'-0"	1 3/4"	C	S.C.	STL.	4-A-6		1-HOUR RATED
29	3'-0" x 7'-0"	1 3/4"	B	S.C.	STL.	4-A-6		
30	2'-6" x 7'-0"	1 3/4"	B	S.C.	STL.	4-A-6		
31	3'-0" x 7'-0"	1 3/4"	B	S.C.	STL.	4-A-6		
32	3'-0" x 7'-0"	1 3/4"	B	S.C.	STL.	4-A-6		
33	3'-0" x 8'-0"	—	A	ALUM. STOREFRONT		8-A-6 7 SIM		
34	3'-0" x 8'-0"	—	A	ALUM. STOREFRONT		8-A-6 7 SIM		
35	3'-0" x 7'-0"	1 3/4"	C	S.C.	STL.	4-A-6		1-HOUR RATED
36	3'-0" x 7'-0"	1 3/4"	B	S.C.	STL.	4-A-6		
37	5'-0" x 7'-0" (PAIR)	1 3/4"	B	S.C.	STL.	4-A-6		
38	5'-6" x 7'-0" (BI-PASS)	1 3/4"	B	S.C.	STL.	2 & 3 A-6		
39	7'-0" x 7'-0" (BI-PASS)	1 3/4"	B	S.C.	STL.	2 & 3 A-6		
40	5'-9" x 7'-0" (BI-PASS)	1 3/4"	B	S.C.	STL.	2 & 3 A-6		
41	6'-6" x 7'-0" (BI-PASS)	1 3/4"	B	S.C.	STL.	2 & 3 A-6		
42	VARIES x 4'-0" (BI-PASS)	1 3/8"	B	H.C.	WOOD	1 & 3 A-6		
43	1'-6" x 7'-0"	1 3/4"	B	S.C.	WOOD	4-A-6		

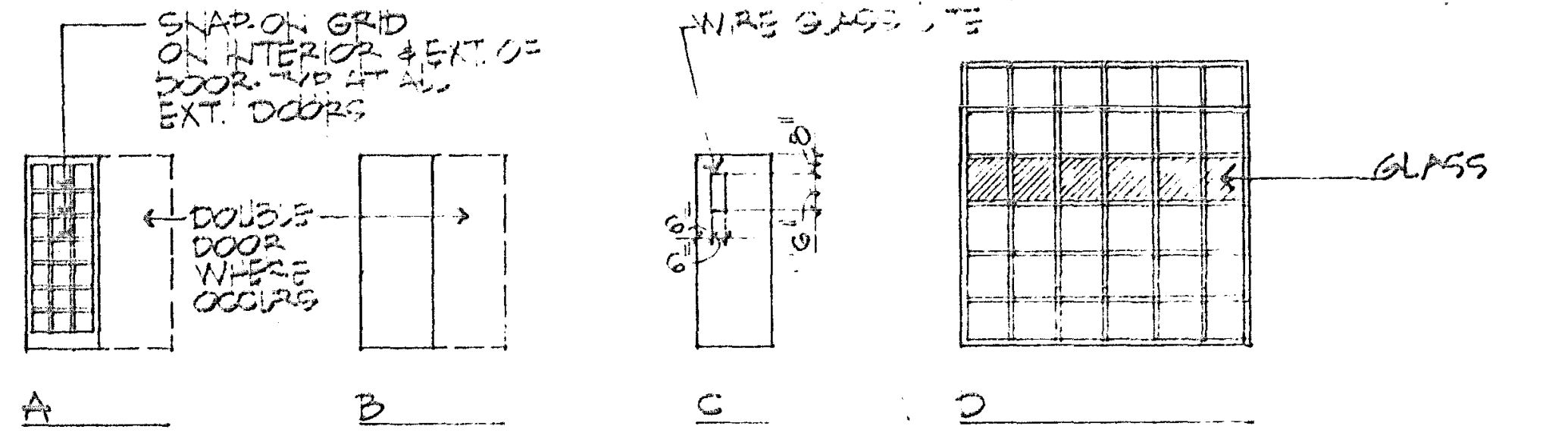
SNAP-ON GRID ON INTERIOR & EXT. OF DOOR - TYP. AT ALL EXT. DOORS
DOUBLE DOOR WHERE OCCURS
WIRE GLASS LITE
GLASS
A
B
C
D

FINISH SCHEDULE

NO.	ROOM NAME	FLOOR				BASE			WALLS						CEILING					HGT.	REMARKS
		CARPET	CERAMIC TILE	COMPOSITION TILE	CONC. W/ HARDENER	RUBBER CARPET, 4"	RUBBER, COVED TOPSET, 4"	COVED CERAMIC TILE	1/2" GYP. BRD./S. GLOSS EN. PAINT	1/2" GYP. BRD. W/ FLAT ENAM. PAINT	4"x4" CERAMIC TILE	1/2" W.R. GYP. BRD./S. GLOSS EN. PAINT	1/2" GYP. BRD. W/ SEALER ONLY	5/8" TYPE 'X' BOTH SIDE OF WALL △1	△1 1/2" GYP. BRD./FLAT ENAM. PAINT	1/2" GYP. BRD./S. GLOSS EN. PAINT	1/2" GYP. BRD./ACOUS. PLASTER	1/2" GYP. BRD. W/ SEALER ONLY	EXPOSED CONST.		
1	FLOOR WATCH	○				○				○				○			○			9'-0"	TYPE 'X' ON WEST WALL ONLY
2	FIRE PREVENTION	○				○				○							○			9'-0"	
3	STATION OFFICE	○				○				○				○			○			9'-0"	TYPE 'X' ON WEST WALL ONLY
4	B.C. OFFICE	○				○				○							○			9'-0"	
5	B.C.R.R.		○					○			○	○				○				9'-0"	
6	B.C. DORM	○				○				○							○			9'-0"	
7	H.C.R.R.		○					○			○	○				○				9'-0"	
8	P.C.F. OFFICE	○				○				○				○			○			9'-0"	△1 TYPE 'X' ON WEST WALL ONLY
9	DAY ROOM	○				○	○			○							○			9'-0"	
10	WALL POCKET			○			○						○				○			9'-0"	
11	DINING			○			○			○				○			○			9'-0"	TYPE 'X' ON WEST WALL ONLY
12	KITCHEN			○			○		○					○		○				9'-0"	TYPE 'X' ON WEST WALL ONLY
13	PANTRY			○			○		○					○		○				9'-0"	△1 TYPE 'X' ON WEST WALL ONLY
14	APPARATUS ROOM				○		○			○									○	VARIES	
15	JANITOR				○								○						○	9'-0"	△1
16	MEDICAL	○				○			○					○		○				9'-0"	TYPE 'X' ON EAST WALL ONLY
17	DORM & LOCKERS	○				○				○				○			○			9'-0"	TYPE 'X' ON EAST WALL ONLY
18	UNISEX R.R.		○					○			○	○				○				9'-0"	
19	SHOWERS		○					○			○					○				9'-0"	
20	REST. RM.		○					○			○	○		○		○				9'-0"	△1 TYPE 'X' ON EAST WALL ONLY
21	STORAGE			○			○			○					○					9'-0"	
22	STORAGE				○								○					○		9'-0"	
23	STORAGE				○								○					○		9'-0"	
24	ELECT.				○								○					○		9'-0"	
25	ALARM & PHONE				○					○						○				9'-0"	
26	P.C.F. STOR.				○		○			○						○				9'-0"	△1
27	ROOF HATCH ACCESS			○			○			○						○				VARIES	
28	WORK BENCH				○		○			○						○				9'-0"	
29	HOSE STOR.				○		○			○						○				9'-0"	△1
30	TRAINING STOR.			○			○			○						○				9'-0"	
31	STOR.				○								○					○		9'-0"	△1
32	AIR COMP.				○								○					○		VARIES	
33	STORAGE				○		○			○					○					9'-0"	△2

WINDOW SCHEDULE

SYM.	SIZE (WxH)	TYPE	FRAME	GLASS	DETAILS	REMARKS △5
Ⓐ	6'-0" x 5'-0"	A	ALUM. COLOR COAT	1/4" SOLAR GRAY	5-A-6 7 SIM	SLIDER - OX PROVIDE VERTICAL BLINDS
~~B~~	~~OMIT~~	~~B~~	~~ALUM. COLOR COAT~~	~~1/4" SOLAR GRAY~~	~~7-A-6~~	FIXED △1
C	6'-0" x 5'-0"	A	ALUM. COLOR COAT	1/4" SOLAR GRAY	5-A-6 7 SIM	SLIDER - OX
D	6'-0" x 5'-0"	C	ALUM. COLOR COAT	1/4" SOLAR GRAY	5-A-6 7 SIM	SLIDER - OX
E	9'-0" x 5'-0"	D	ALUM. COLOR COAT	1/4" SOLAR GRAY	5 & 7 SIM A-6	SLIDER - OXO
F	8'-0" x 5'-0"	A	ALUM. COLOR COAT	1/4" SOLAR GRAY	5-A-6 7 SIM	SLIDER - OX
G	11'-6" x 5'-0"	E	ALUM. COLOR COAT	1/4" SOLAR GRAY	7 A-6 SIM	FIXED
H	4'-0" x 3'-0"	A	ALUM. COLOR COAT	1/4" SOLAR GRAY	5-A-6 7 SIM	SLIDER - OX OBSCURE
I	4'-0" x 3'-0"	A	ALUM. COLOR COAT	1/4" SOLAR GRAY	5-A-6 7 SIM	SLIDER - OX OBSCURE
J	5'-0" x 5'-0"	A	ALUM. COLOR COAT	1/4" SOLAR GRAY	5-A-6 7 SIM	SLIDER - XO
K	5'-0" x 5'-0"	A	ALUM. COLOR COAT	1/4" SOLAR GRAY	5-A-6 7 SIM	SLIDER - XO
L	5'-0" x 5'-0"	A	ALUM. COLOR COAT	1/4" SOLAR GRAY	5-A-6 7 SIM	SLIDER - XO
M	5'-0" x 5'-0"	A	ALUM. COLOR COAT	1/4" SOLAR GRAY	5-A-6 7 SIM	SLIDER - XO
N	6'-0" x 5'-0"	A	ALUM. COLOR COAT	1/4" SOLAR GRAY	5-A-6 7 SIM	SLIDER - OX △1
O	6'-0" x 5'-0"	A	ALUM. COLOR COAT	1/4" SOLAR GRAY	5-A-6 7 SIM	SLIDER - XO PROVIDE VERTICAL BLINDS △5
P	6'-0" x 5'-0"	F	ALUM. COLOR COAT	1/4" CLEAR	6-A-6	FIXED W/ FIRE GLASS
Q	12' DIA. HALF ROUND	G	ALUM. COLOR COAT	1/4" SOLAR GRAY		FIXED
R	12' DIA. HALF ROUND	G △1	ALUM. COLOR COAT	1/4" SOLAR GRAY		FIXED
S	12' DIA. HALF ROUND	G	ALUM. COLOR COAT	1/4" SOLAR GRAY		FIXED

TYPES

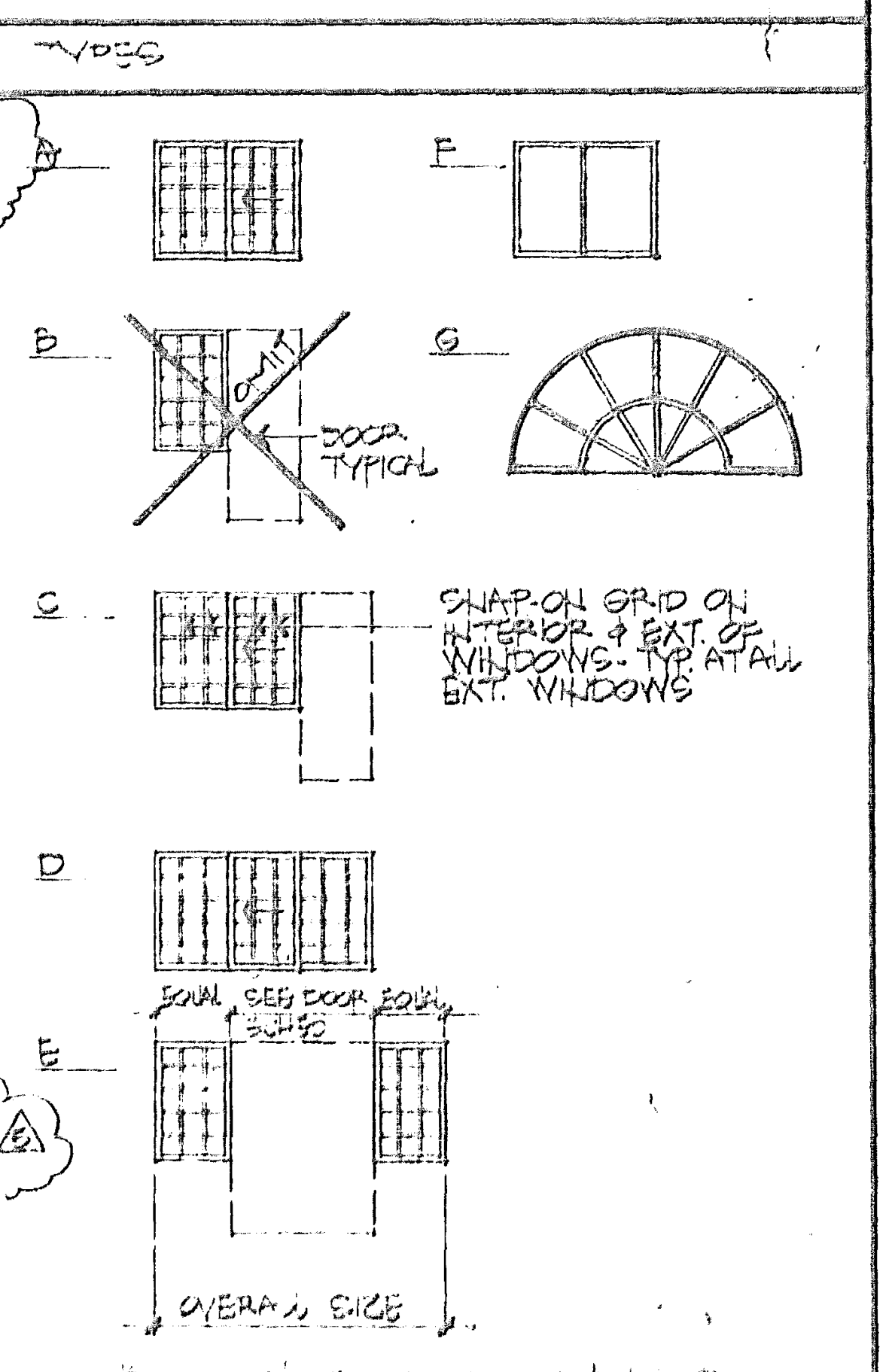
A
B
C
D
E
F
G
DOOR TYPICAL
SNAP-ON GRID ON INTERIOR & EXT. OF WINDOWS - TYP. AT ALL EXT. WINDOWS
SWING
SEE DOOR SCHED.
OVERALL SIZE

** TYPICAL FOR WINDOW & DOOR STOREFRONT COMBINATIONS

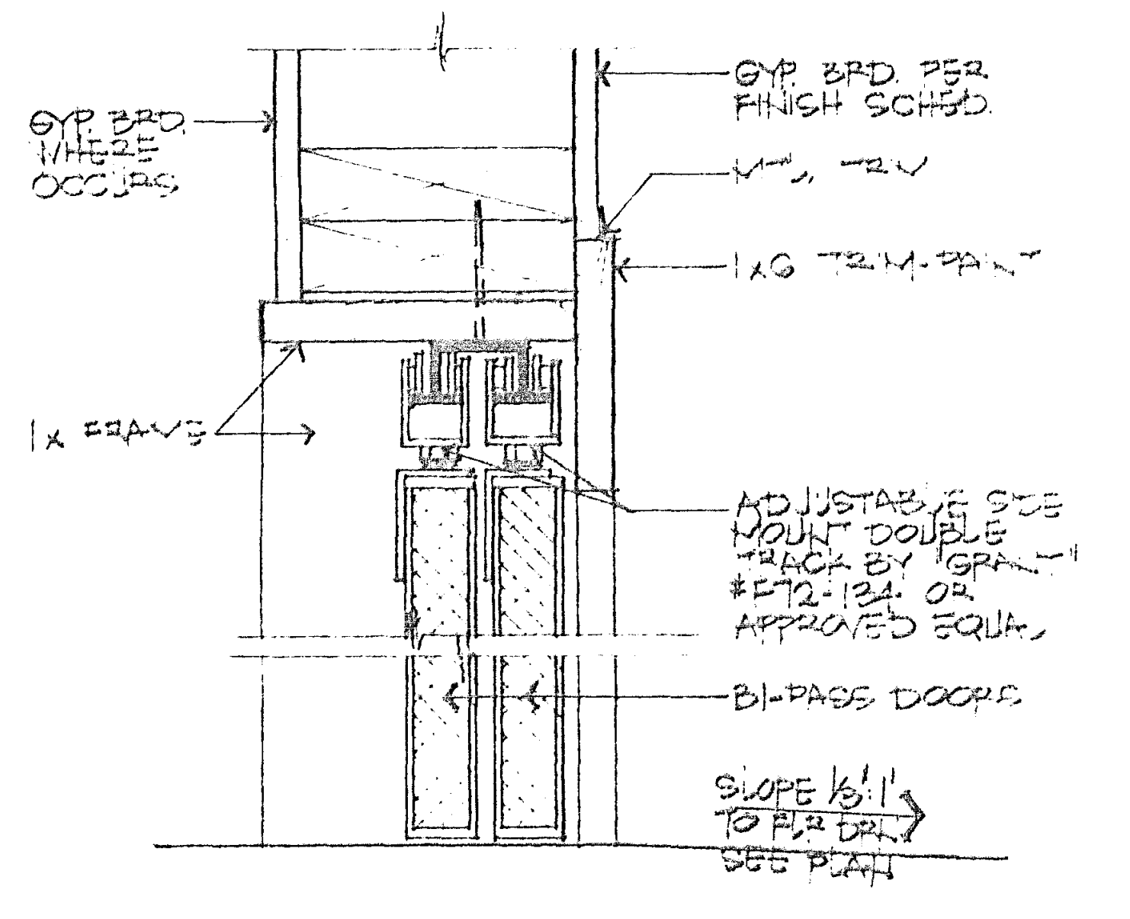
GYP. BRD. WHERE OCCURS
GYP. BRD. PER FINISH SCHED.
MTL. TRIM
1x6 TRIM - PAINT
1x FRAME
ADJUSTABLE SIDE MOUNT DOUBLE TRACK BY "GRANT" #E72-134 OR APPROVED EQUAL
BI-PASS DOORS
SLOPE 1/8":1' TO FLR. DRN. SEE PLAN

BI-PASS DOOR SC: 3"=1'-0" ②

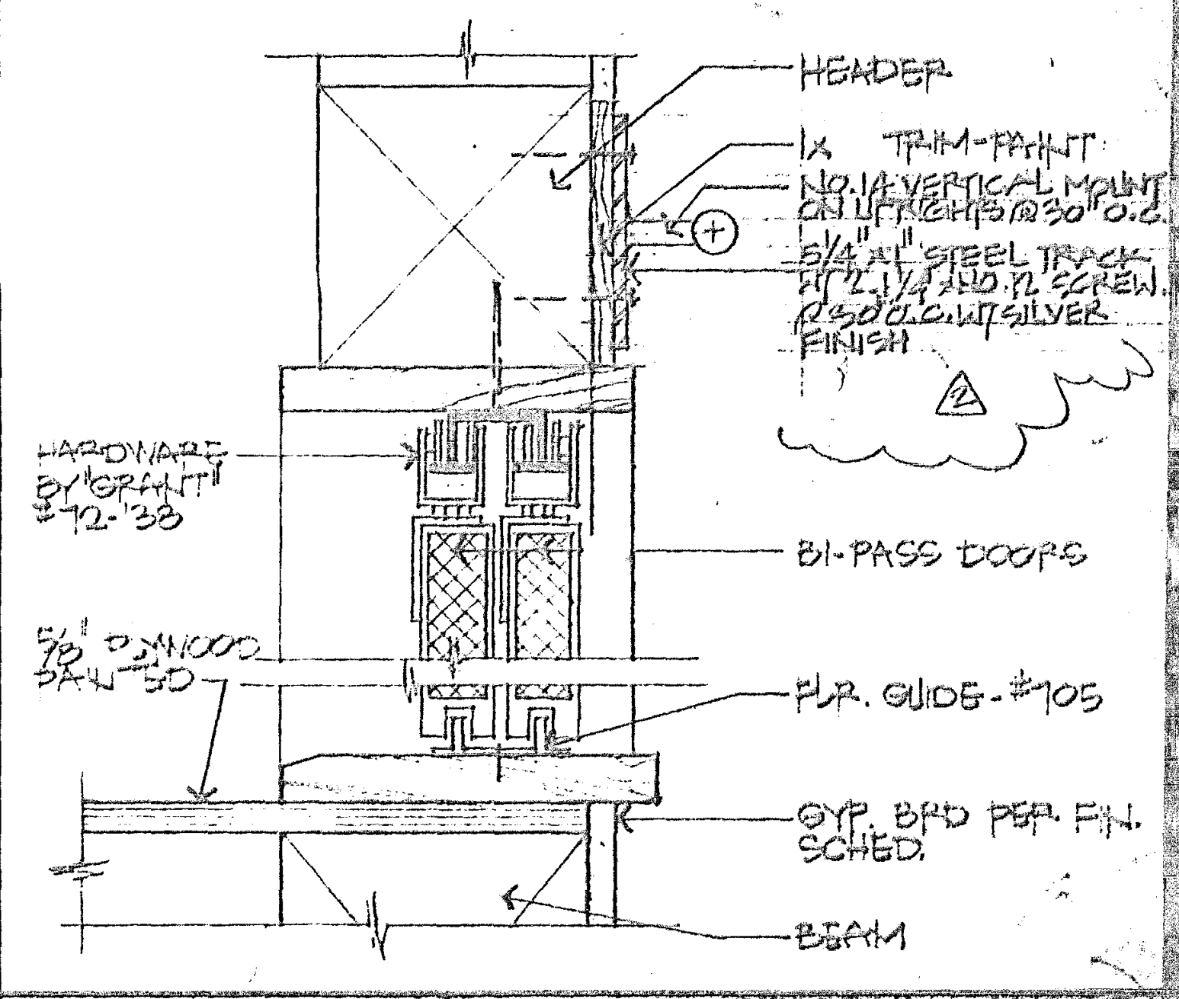
HEADER
1x TRIM - PAINT
NO. 14 VERTICAL MOUNT ON UPRIGHTS @ 30" O.C.
5/4" x 1" STEEL TRACK W/ 2 1/4 AND 12 SCREW @ 30" O.C. W/ SILVER FINISH
△2
HARDWARE BY "GRANT" #72-38
BI-PASS DOORS
5/8" PLYWOOD PAINTED
FLR. GUIDE - #705
GYP. BRD PER FIN. SCHED.
BEAM

STORAGE BI-PASS DOOR SC: 3"=1'-0" ①

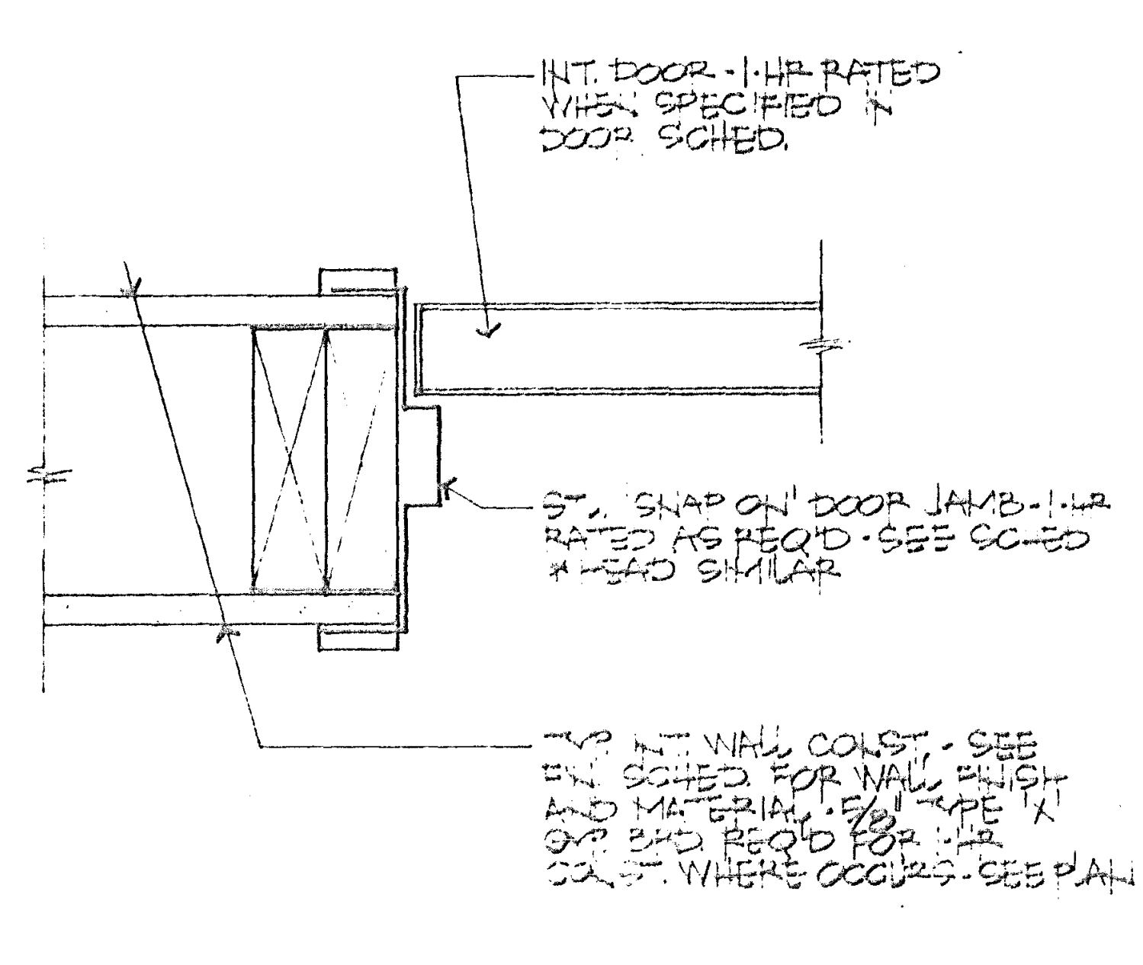
INT. DOOR - 1-HR RATED WHEN SPECIFIED IN DOOR SCHED.
STL. SNAP ON DOOR JAMB - 1-HR RATED AS REQ'D - SEE SCHED. & HEAD SIMILAR
TYP. INT. WALL CONST. - SEE FIN. SCHED. FOR WALL FINISH AND MATERIAL - 5/8" TYPE 'X' GYP. BRD. REQ'D FOR 1-HR CONST. WHERE OCCURS - SEE PLAN

TYP. INTERIOR DOOR JAMB SC: 3"=1'-0" ④

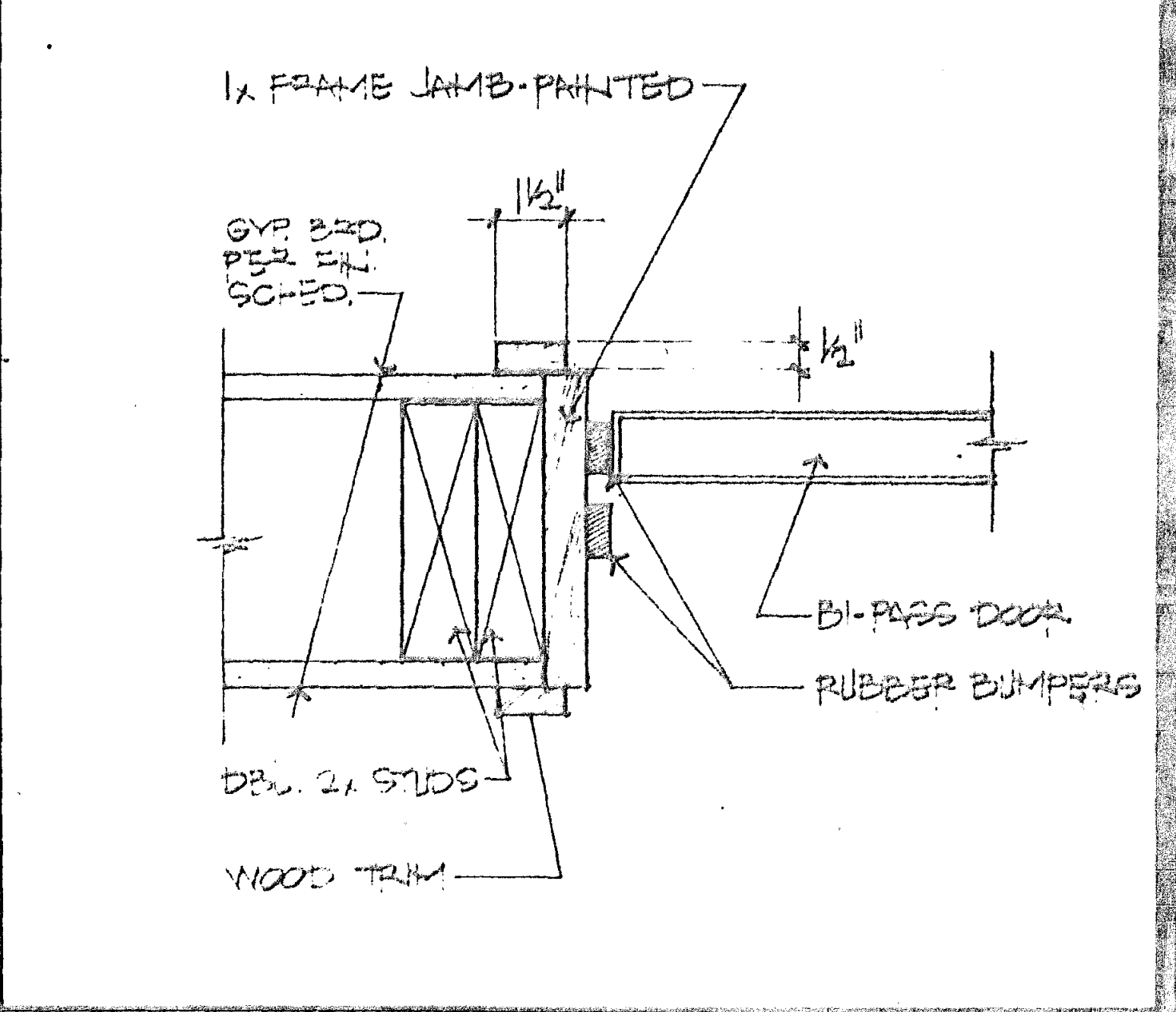
1x FRAME JAMB - PAINTED
GYP. BRD. PER FIN. SCHED.
1 1/2"
1/2"
BI-PASS DOOR
RUBBER BUMPERS
DBL. 2x STUDS
WOOD TRIM

BI-PASS DOOR JAMB SC: 3"=1'-0" ③

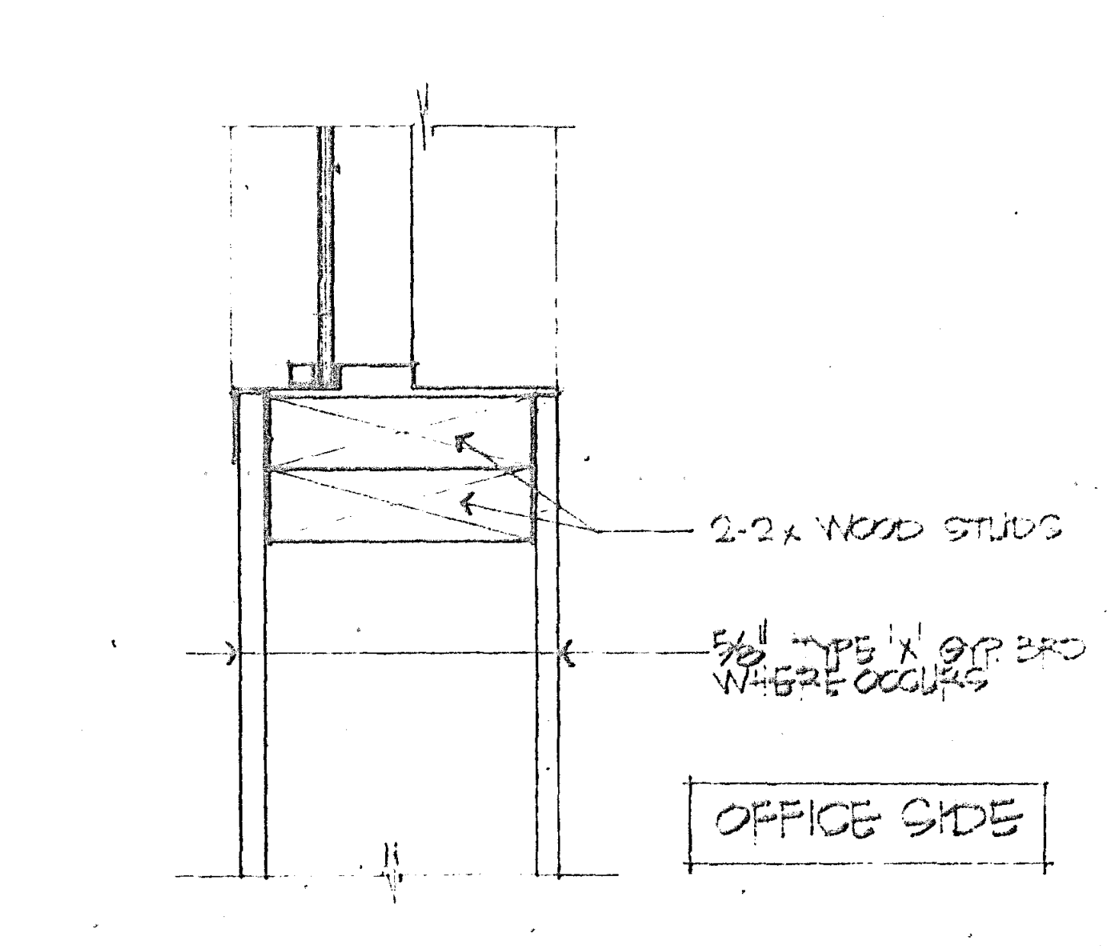
2-2x WOOD STUDS
5/8" TYPE 'X' GYP. BRD. WHERE OCCURS
OFFICE SIDE

FIXED GLASS WIND. SC: 3"=1'-0" ⑥

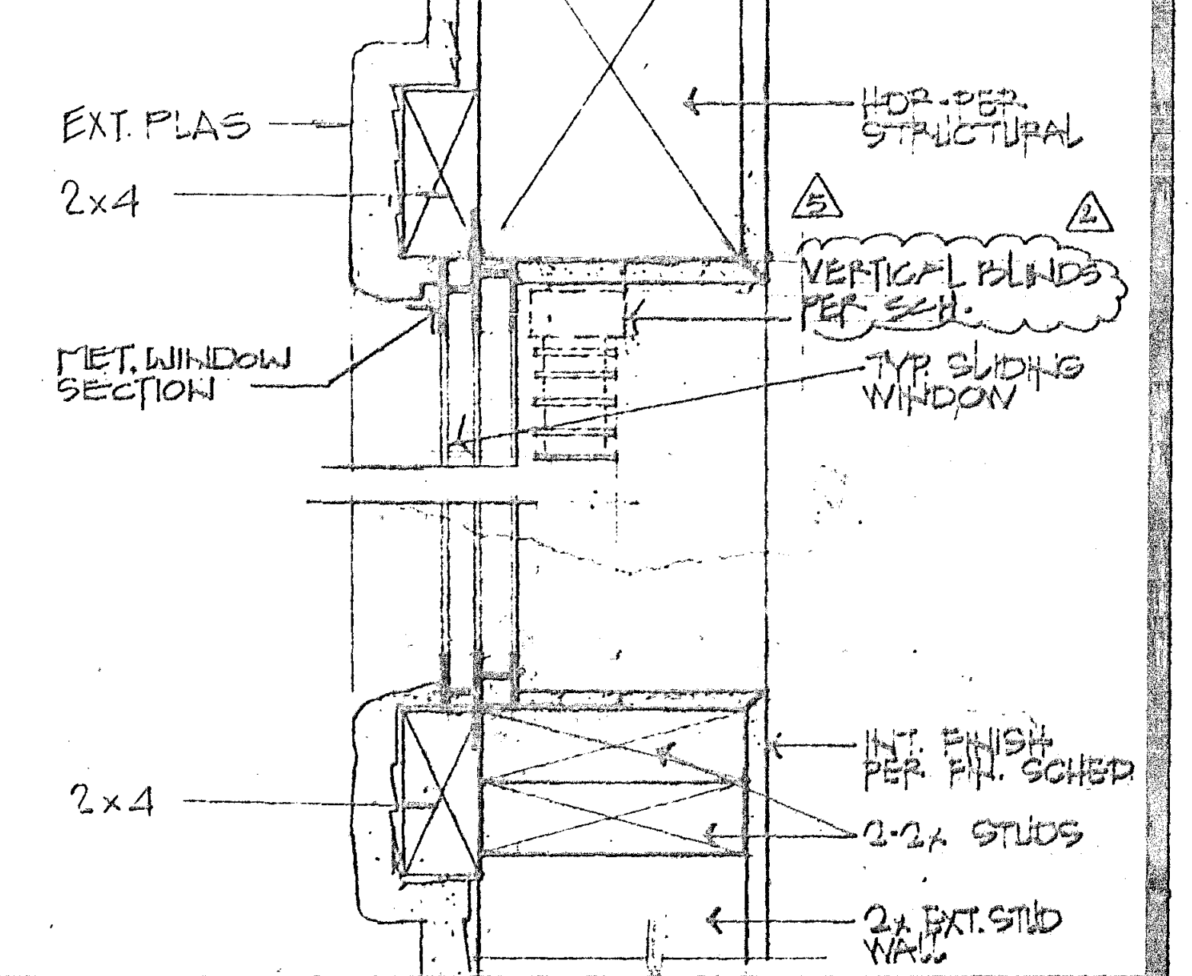
EXT. PLAS
2x4
HDR. PER STRUCTURAL
△5
△2
VERTICAL BLINDS PER SCH.
MET. WINDOW SECTION
TYP. SLIDING WINDOW
INT. FINISH PER FIN. SCHED.
2x4
2-2x STUDS
2x EXT. STUD WALL

TYP. SLIDING WINDOW SC: 3"=1'-0" ⑤

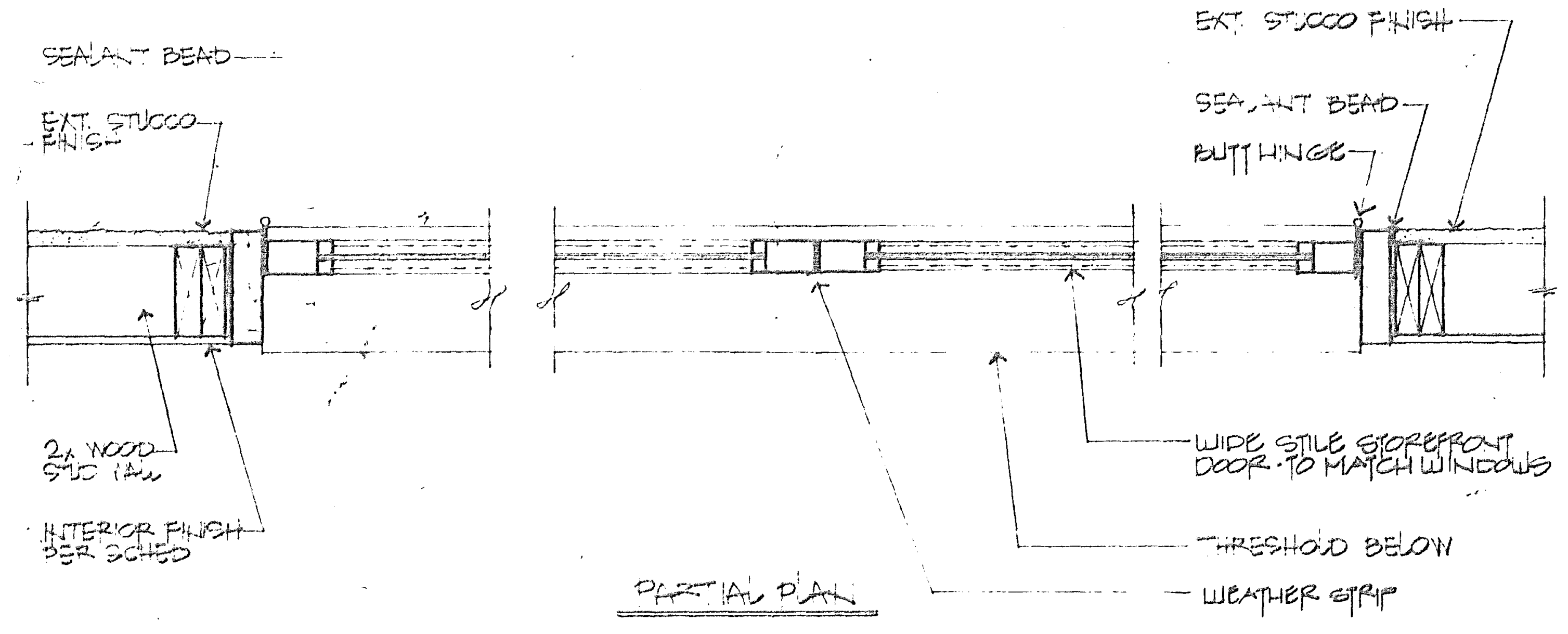
SEALANT BEAD
EXT. STUCCO FINISH
2x WOOD STUD WALL
INTERIOR FINISH PER SCHED.
PARTIAL PLAN
EXT. STUCCO FINISH
SEALANT BEAD
BUTT HINGE
WIDE STILE STOREFRONT DOOR - TO MATCH WINDOWS
THRESHOLD BELOW
WEATHER STRIP

DOOR AND FIXED WINDOW JAMB AND DOOR TO WINDOW SC: 1 1/2"=1'-0" ⑦

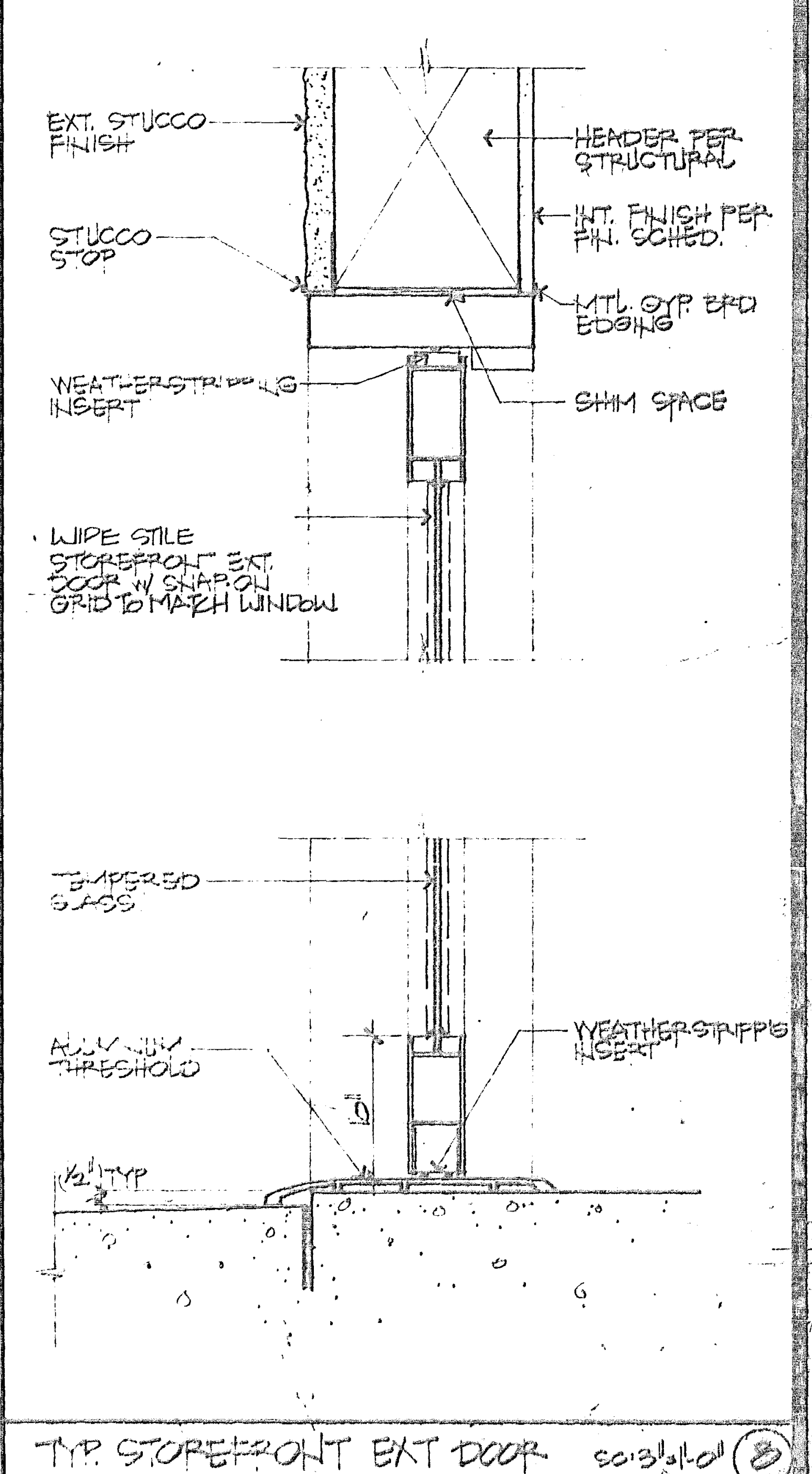
EXT. STUCCO FINISH
HEADER PER STRUCTURAL
INT. FINISH PER FIN. SCHED.
STUCCO STOP
MTL. GYP. BRD. EDGING
WEATHERSTRIPPING INSERT
SHIM SPACE
WIDE STILE STOREFRONT EXT. DOOR W/ SNAP-ON GRID TO MATCH WINDOW
TEMPERED GLASS
ALUMINUM THRESHOLD
WEATHERSTRIPPING INSERT
1/2" TYP.

TYP. STOREFRONT EXT DOOR SC: 3"=1'-0" ⑧

THESE DRAWINGS REPRESENT AS-BUILT CONDITIONS TO THE BEST OF OUR KNOWLEDGE BASED UPON VISUAL INSPECTION OF THE BUILDING DURING OCTOBER, 1989.

DOOR/WINDOW/FINISH SCHEDULE

Project No.
Designer
Drawn by
Date 11-1-89 AS-BUILT
Scale
Revisions By Date
△1 BLDG. DEPT.
△2 OWNER
△5 CSA
Sheet

PLAN NO. 90781-1703

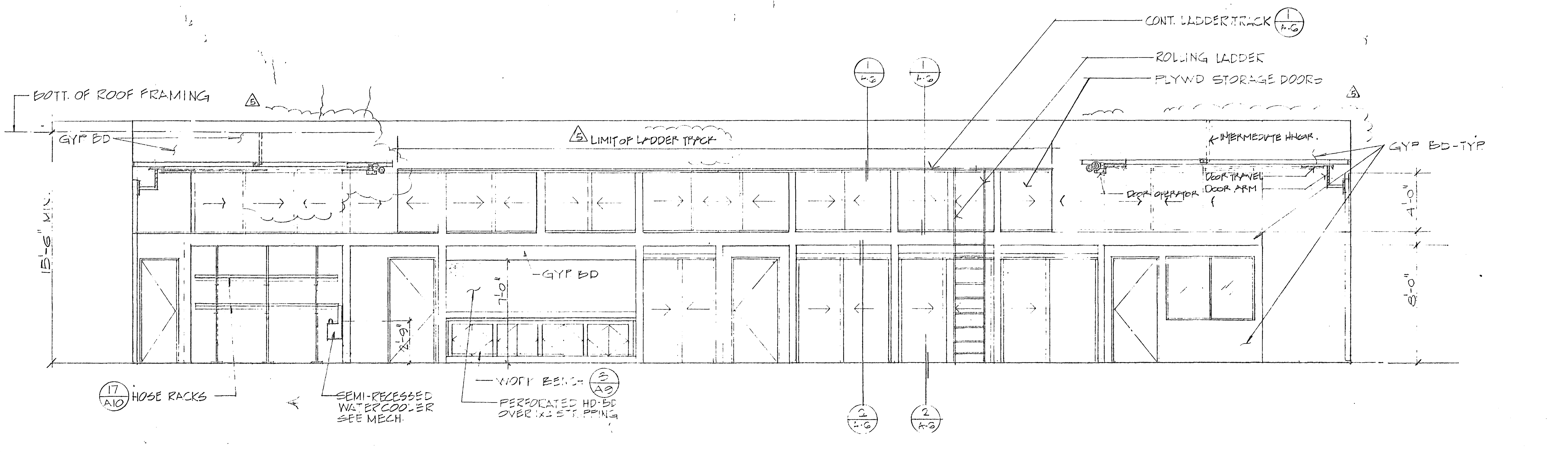
CONT. LADDER TRACK 1/A-6
ROLLING LADDER
PLYWD STORAGE DOORS
BOTT. OF ROOF FRAMING
GYP BD
LIMIT OF LADDER TRACK
INTERMEDIATE HNGR.
GYP BD-TYP
DOOR TRAVEL
DOOR OPERATOR
DOOR ARM
GYP BD
15'-6"
4'-0"
8'-0"
7'-0"
8'-9"
17/A10 HOSE RACKS
SEMI-RECESSED WATERCOOLER SEE MECH.
WORK BENCH 3/A9
PERFORATED HD-BD OVER 1x4 STRIPPING
1/A-6
2/A-6
2/A-6

NORTH WALL ELEVATION

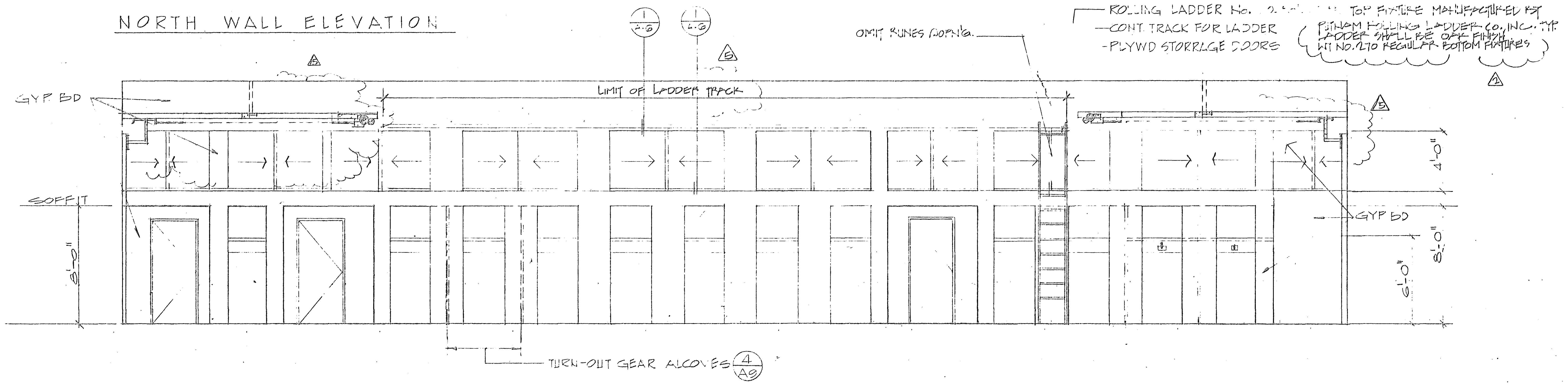
ROLLING LADDER No. TOP FIXTURE MANUFACTURED BY PUTNAM ROLLING LADDER CO., INC. TYP. LADDER SHALL BE OAK FINISH W/ No. 270 REGULAR BOTTOM FIXTURES
CONT TRACK FOR LADDER
PLYWD STORRAGE DOORS
OMIT RUNGS @ OPN'G.
LIMIT OF LADDER TRACK
GYP BD
SOFFIT
GYP BD
4'-0"
8'-0"
8'-0"
TURN-OUT GEAR ALCOVES 4/A8
1/A-6

SOUTH WALL ELEVATION

APPARATUS ROOM

SCALE: 1/8"=1'-0" ①

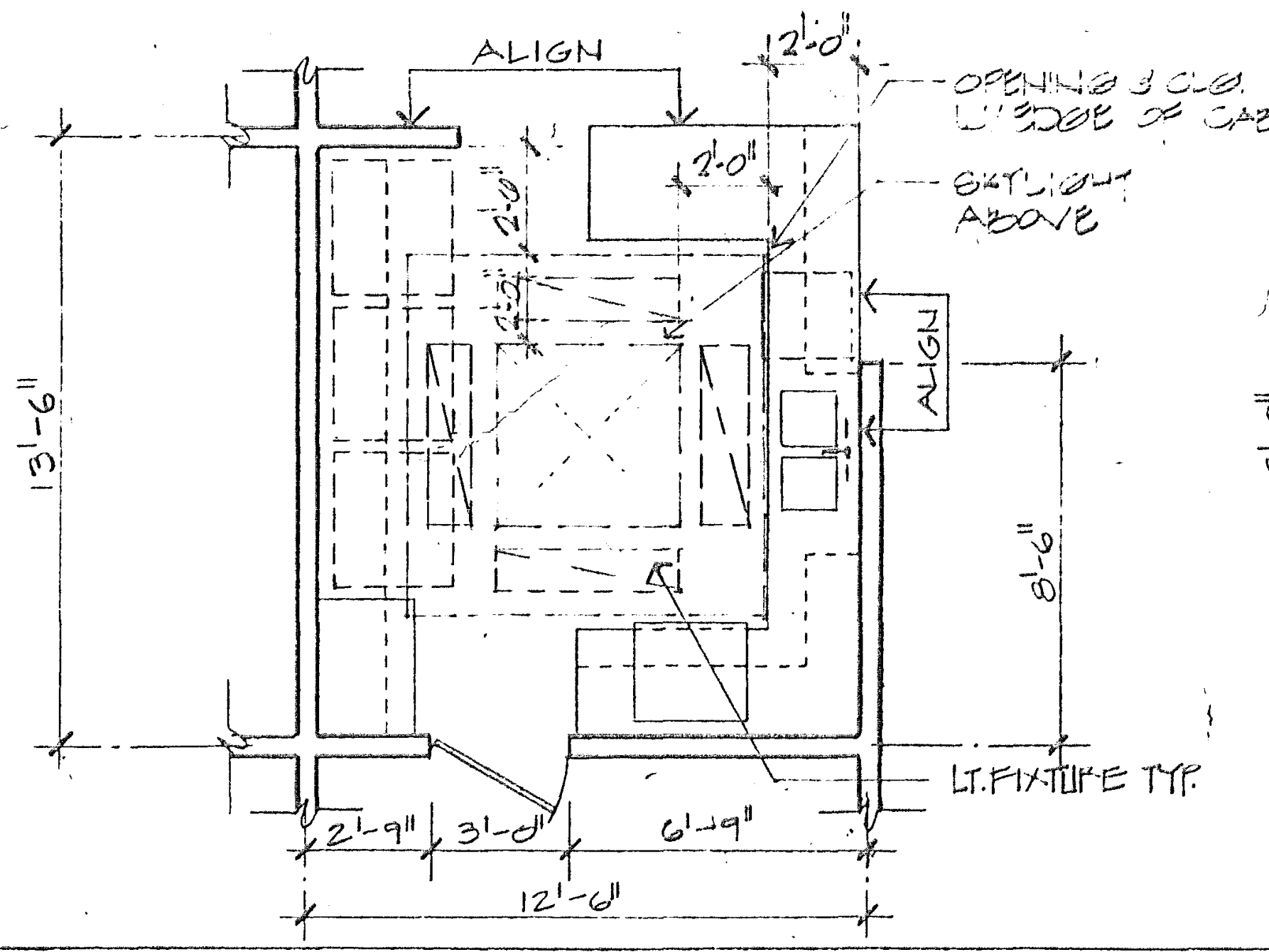
ALIGN
2'-0"
2'-0"
OPENING @ CLG. ALIGN W/ EDGE OF CABINETS
SKYLIGHT ABOVE
ALIGN
13'-6"
8'-6"
LT. FIXTURE TYP.
2'-9"
3'-0"
6'-9"
12'-6"

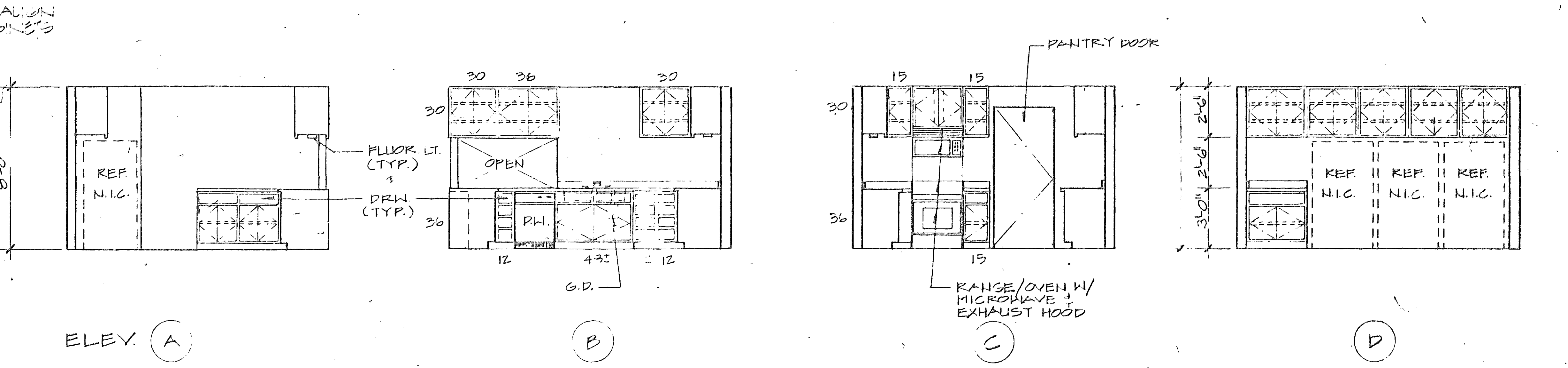
8'-0"
REF. N.I.C.
FLUOR. LT. (TYP.)
DRW (TYP.)
30
36
30
OPEN
D.W.
G.D.
12
12
15
15
PANTRY DOOR
RANGE/OVEN W/ MICROWAVE & EXHAUST HOOD
REF. N.I.C.
REF. N.I.C.
REF. N.I.C.

ELEV. (A) (B) (C) (D)

KITCHEN

SCALE: 1/4"=1'-0"

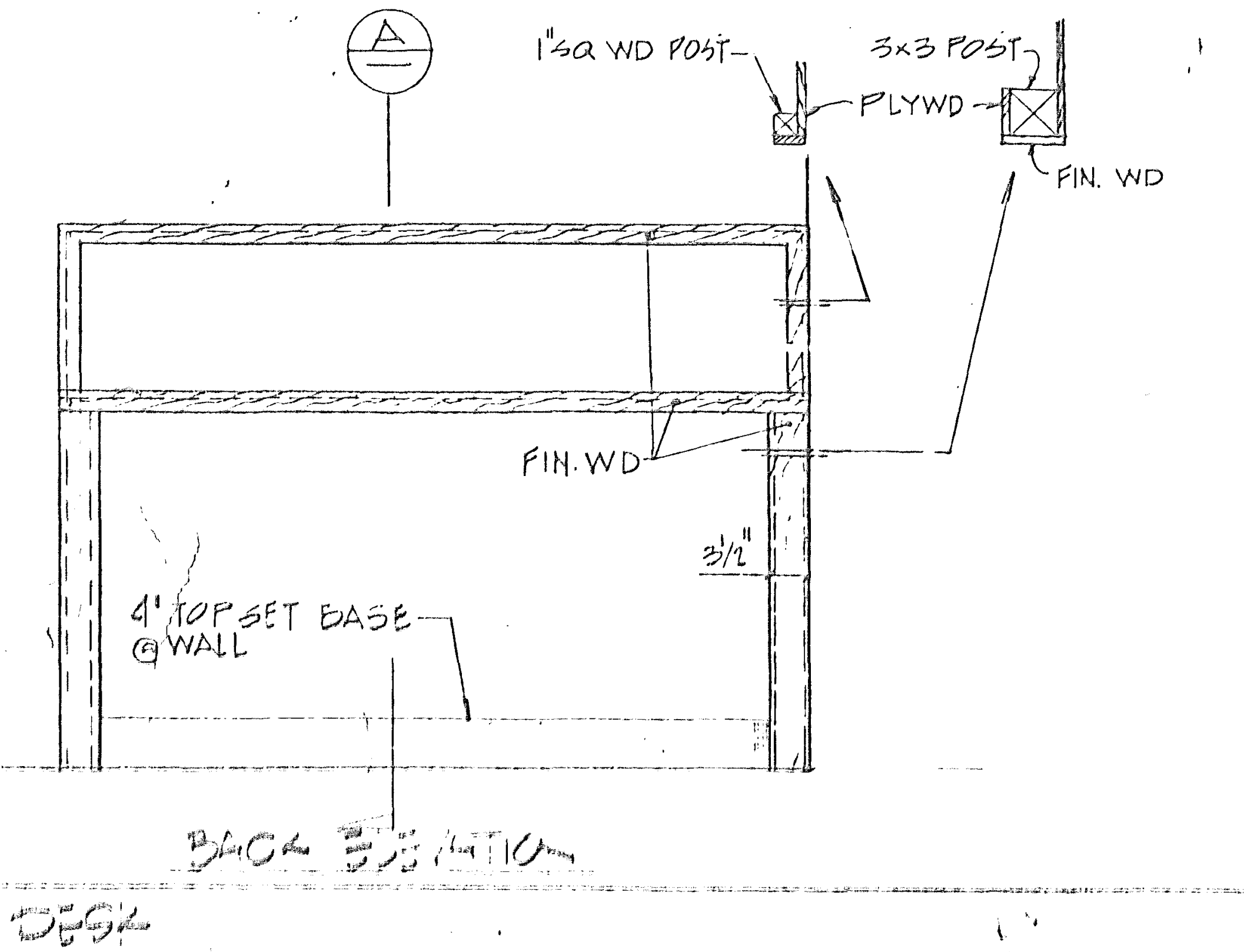
A
1"SQ WD POST
PLYWD
3x3 POST
FIN. WD
FIN. WD
3 1/2"
4" TOP SET BASE @ WALL

BACK ELEVATION

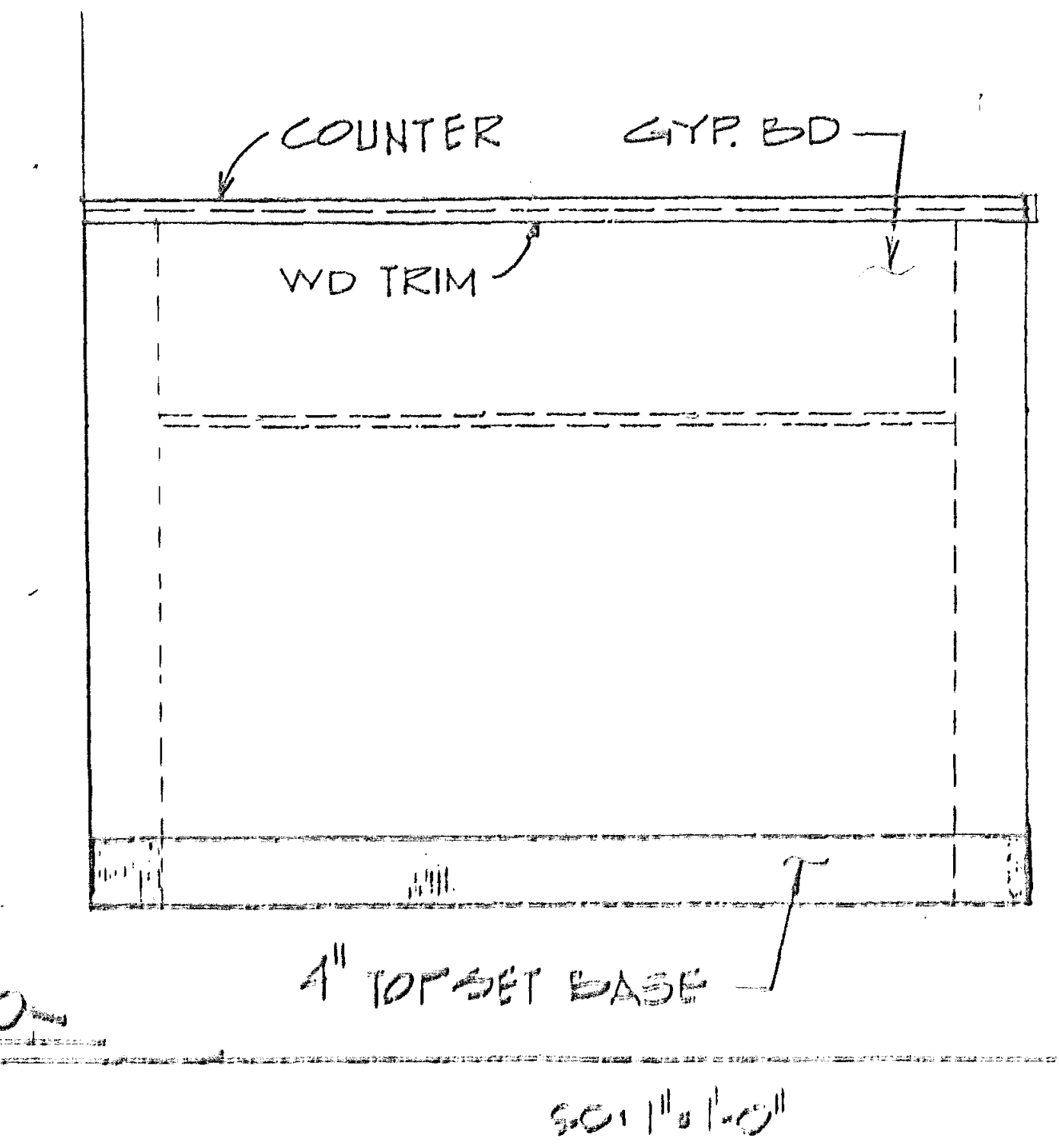
COUNTER
GYP. BD
WD TRIM
4" TOP SET BASE

FRONT ELEVATION

ENTRY DESK

SCALE 1"=1'-0" ①

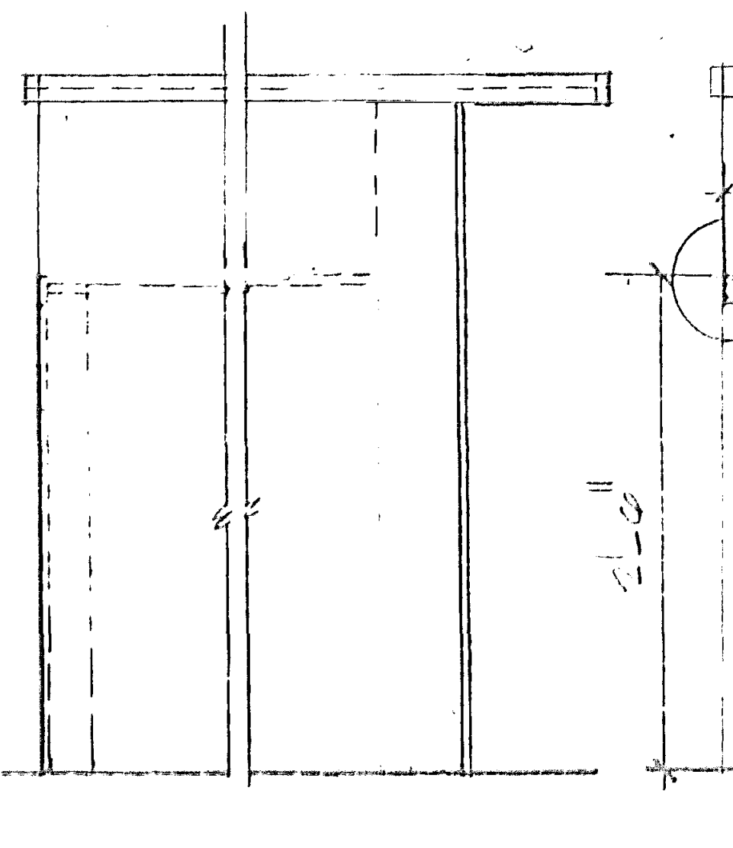

SECTION (B)

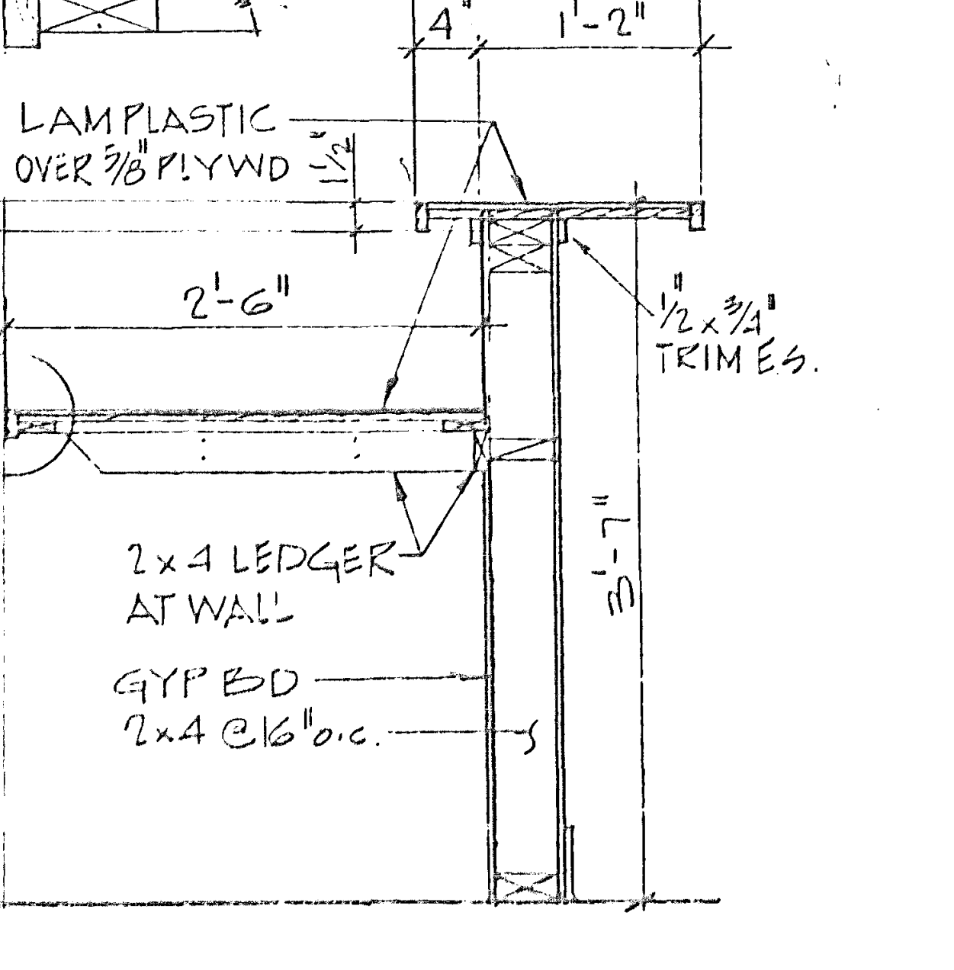
3/4"
1'-6"
4"
1'-2"
LAM PLASTIC OVER 5/8" PLYWD
1/2"
1/2"x3/4" TRIM E.S.
2'-6"
2x4 LEDGER AT WALL
GYP BD
2x4 @16" o.c.
2'-6"
3'-7"

SECTION (A)

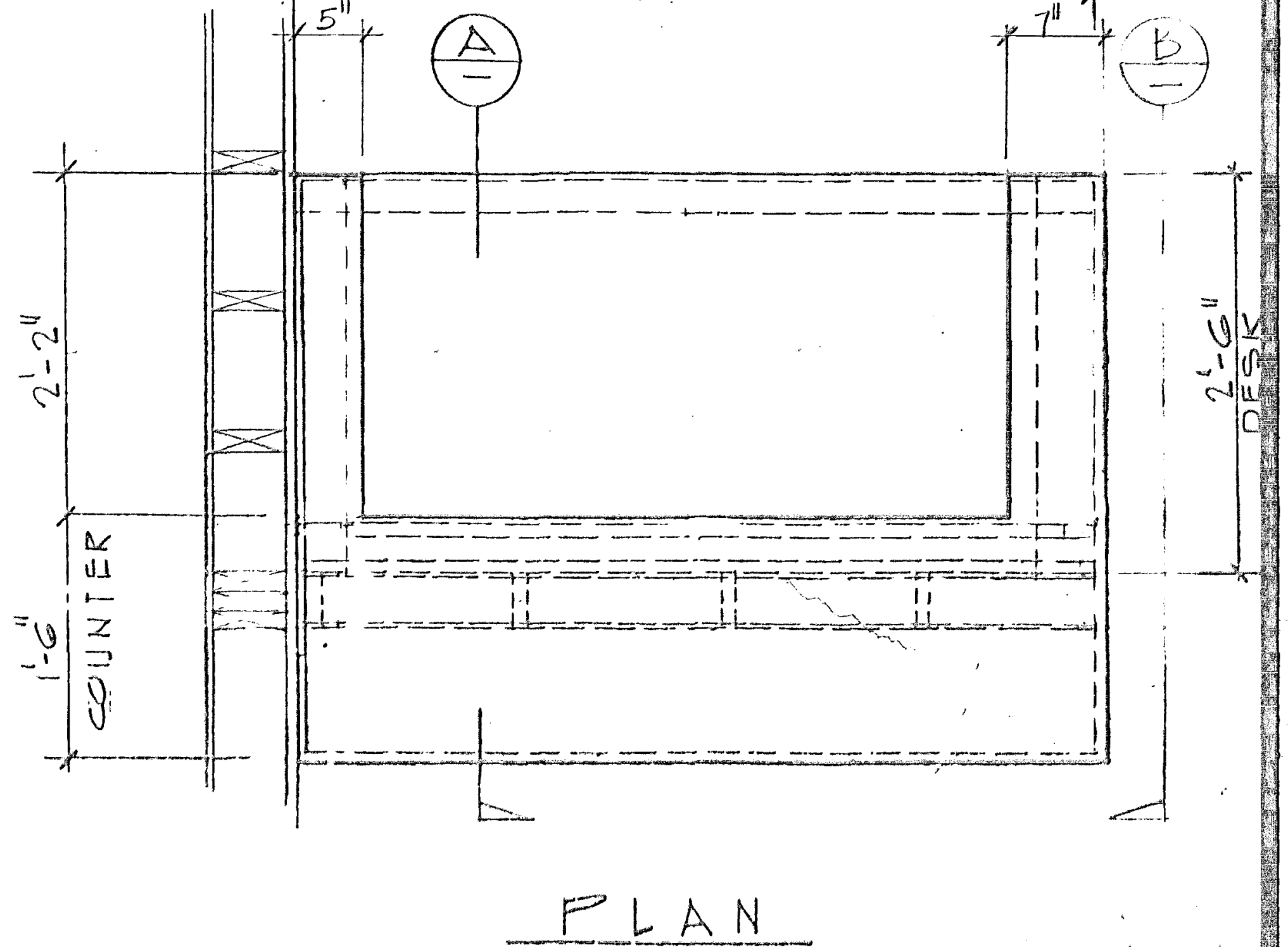
4'-3" (N.T.S.)
5"
7"
A
B
2'-2"
1'-6" COUNTER
2'-6" DESK

PLAN

McCULLOCH ARCHITECTS

260 Newport Center Drive
Suite 330
Newport Beach
California 92660
714. 759-9141

THESE DRAWINGS REPRESENT AS-BUILT CONDITIONS TO THE BEST OF OUR KNOWLEDGE BASED UPON VISUAL INSPECTION OF THE BUILDING DURING OCTOBER 1987.

WILLIAM C. McCULLOCH
ARCHITECT

INTERIOR ELEVATIONS- APPARATUS RM., KITCHEN

SANTA MARGARITA FIRE STATION #45

30131 AVENTURA AVENUE
RANCHO SANTA MARGARITA
SANTA MARGARITA, CA

Project No.
Designer
Drawn by
Date 11-1-89 AS-BUILT
Scale

Revisions	By	Date
2 OWNER/ARCH.		9/12/90
5 A/E 6/6/90		11/16/90

Sheet A-7 of

PLAN NO. 90781-1703

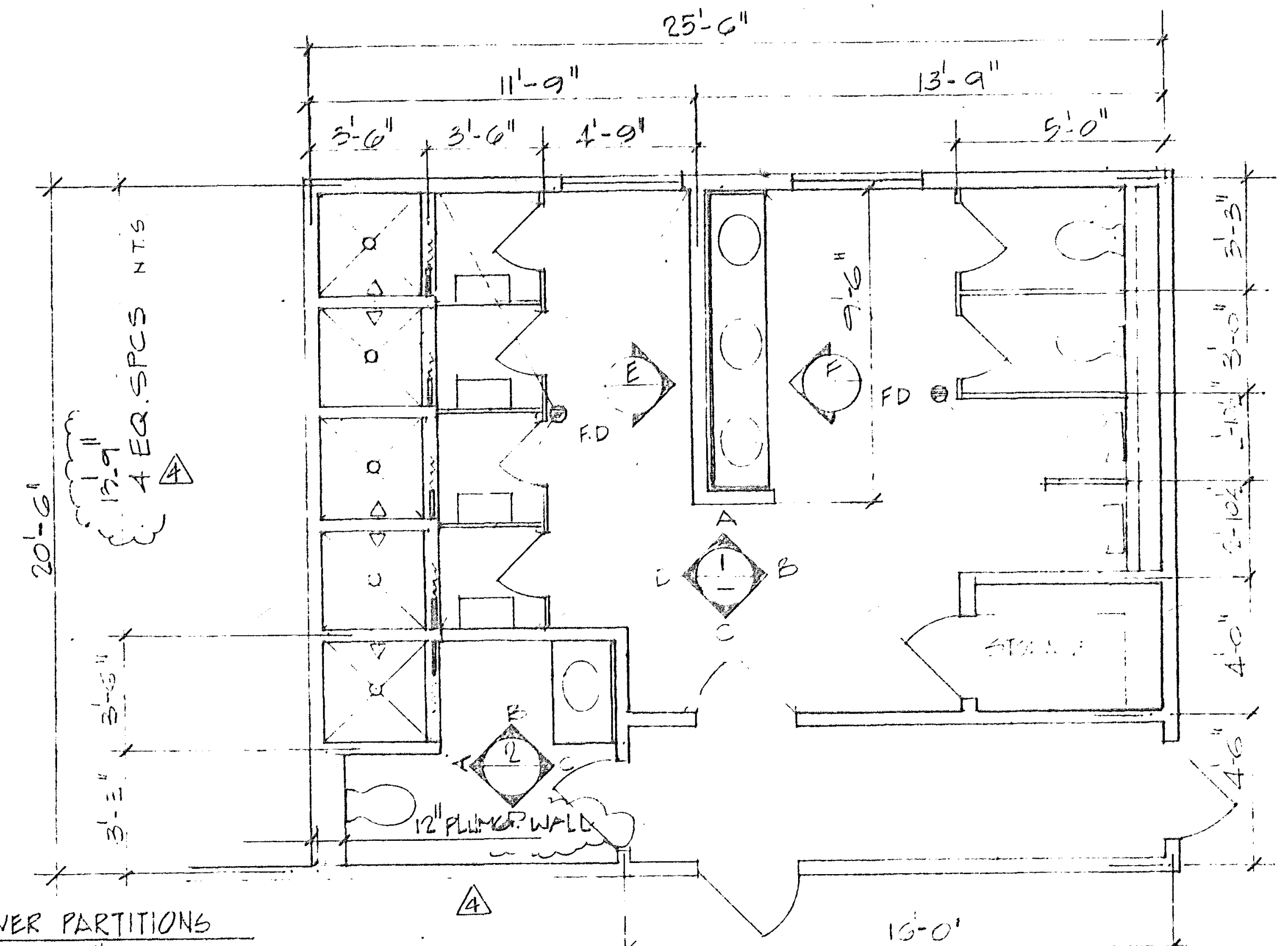
25'-6"
11'-9"
13'-9"
3'-6"
3'-6"
4'-9"
5'-0"
20'-6"
13'-9"
4 EQ. SPCS N.T.S.
3'-8"
3'-8"
7'-6"
F.D
FD
E
F
A
B
C
D
1
2
3'-3"
3'-0"
2'-10½"
4'-0"
4'-6"
15'-0"
12" PLUMB'G WALL
STORAGE

NOTE:
ALL SHOWER PARTITIONS
TO BE 2x4@16" o.c.

PLAN SCALE: 1/4"=1'-0"

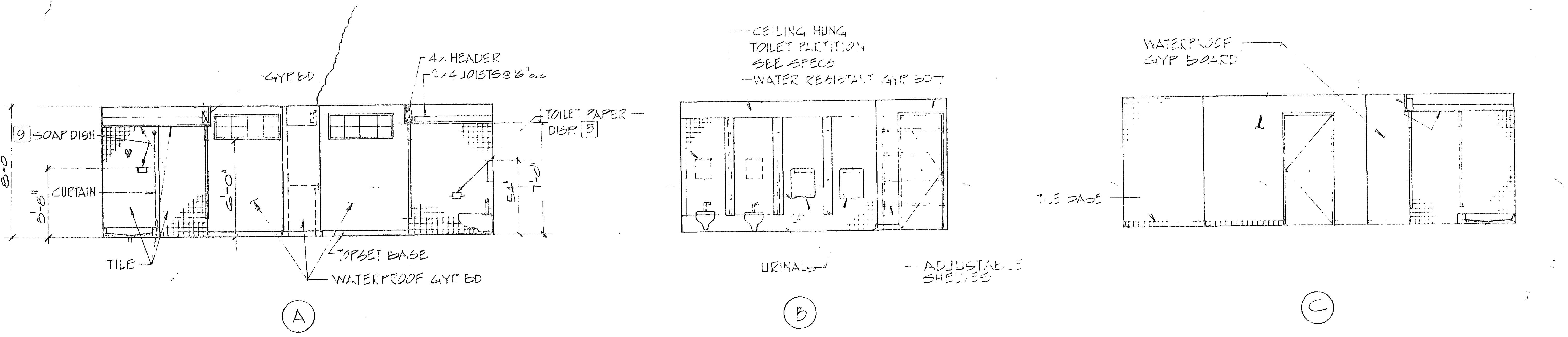
GYP. BD
4x HEADER
2x4 JOISTS@16"o.c.
TOILET PAPER DISP. 5
9 SOAP DISH
CURTAIN
8'-0"
3'-8"
6'-0"
5'-4"
7'-0"
TILE
TOPSET BASE
WATERPROOF GYP BD
CEILING HUNG TOILET PARTITION SEE SPECS
WATER RESISTANT GYP BD
URINALS
ADJUSTABLE SHELVES
WATERPROOF GYP BOARD
TILE BASE
A
B
C

ELEVATIONS

MAIN BATHROOM DETAILS

1 CONT

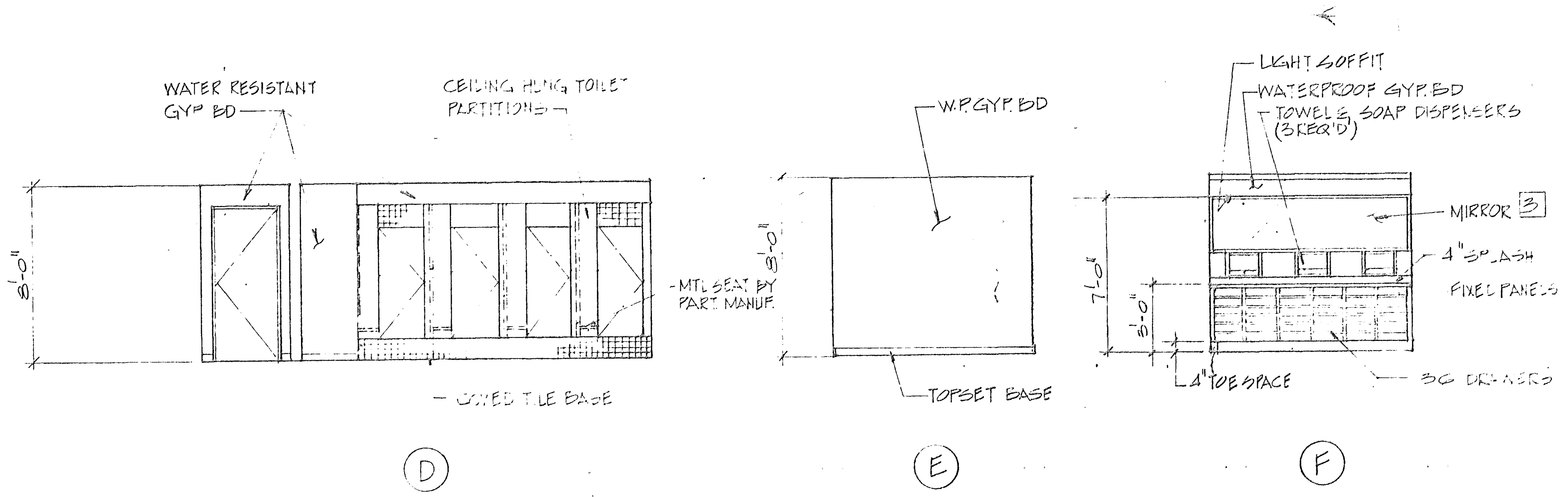
WATER RESISTANT GYP BD
CEILING HUNG TOILET PARTITIONS
8'-0"
MTL SEAT BY PART. MANUF.
COVED TILE BASE
W.P. GYP. BD
TOPSET BASE
LIGHT SOFFIT
WATERPROOF GYP. BD
TOWEL & SOAP DISPENSERS (3 REQ'D)
MIRROR 3
4" SPLASH
FIXED PANELS
7'-0"
3'-0"
4" TOE SPACE
36 DRAWERS
D
E
F

SCALE: 1/4"=1'-0" 1

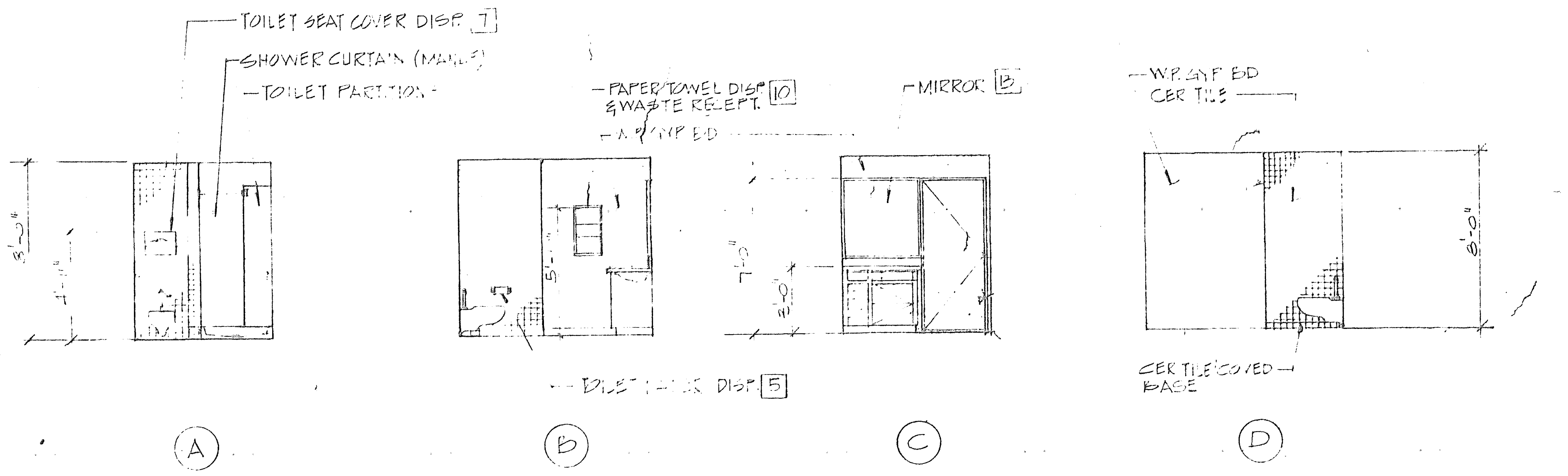
TOILET SEAT COVER DISP. 7
SHOWER CURTAIN (MANUF.)
TOILET PARTITION
PAPER TOWEL DISP. & WASTE RECEPT. 10
W.P. GYP BD
MIRROR 13
W.P. GYP BD
CER TILE
8'-0"
5'-0"
7'-0"
3'-0"
TOILET TISSUE DISP. 5
CER TILE COVED BASE
A
B
C
D

UNISEX BATHROOM WALL ELEVATIONS SCALE: 1/4"=1'-0" 2

TOILET ROOM ACCESSORIES

N°	DISCRIPTION	CAT. NUMBER	REMARKS
1	GRAB BAR - [illegible]" LG	B-6206	
2	GRAB BAR - 42" LG	B-6206	
3	MIRROR 103"x50	B-290	
4	MIRROR - 24"x36"	B-290	
5	TOILET TISSUE DISPENSER	B-6857	
6	SOAP DISPENSER	B-8295	
7	SEAT COVER DISP.	B-3017	
9	SOAP DISH	B-[illegible]	SHOWERS @5'HT
10	CMBO P.TOWEL DISP & WASTE	B-369	
11	TOWEL PIN	B-677	SHOWER-DRESSING
12	SHOWER ROD & CURTAINS	SEE SPECS	
13	MIRROR - 30"x36"	B-290	
14	MIRROR - 36"x36"	B-290	

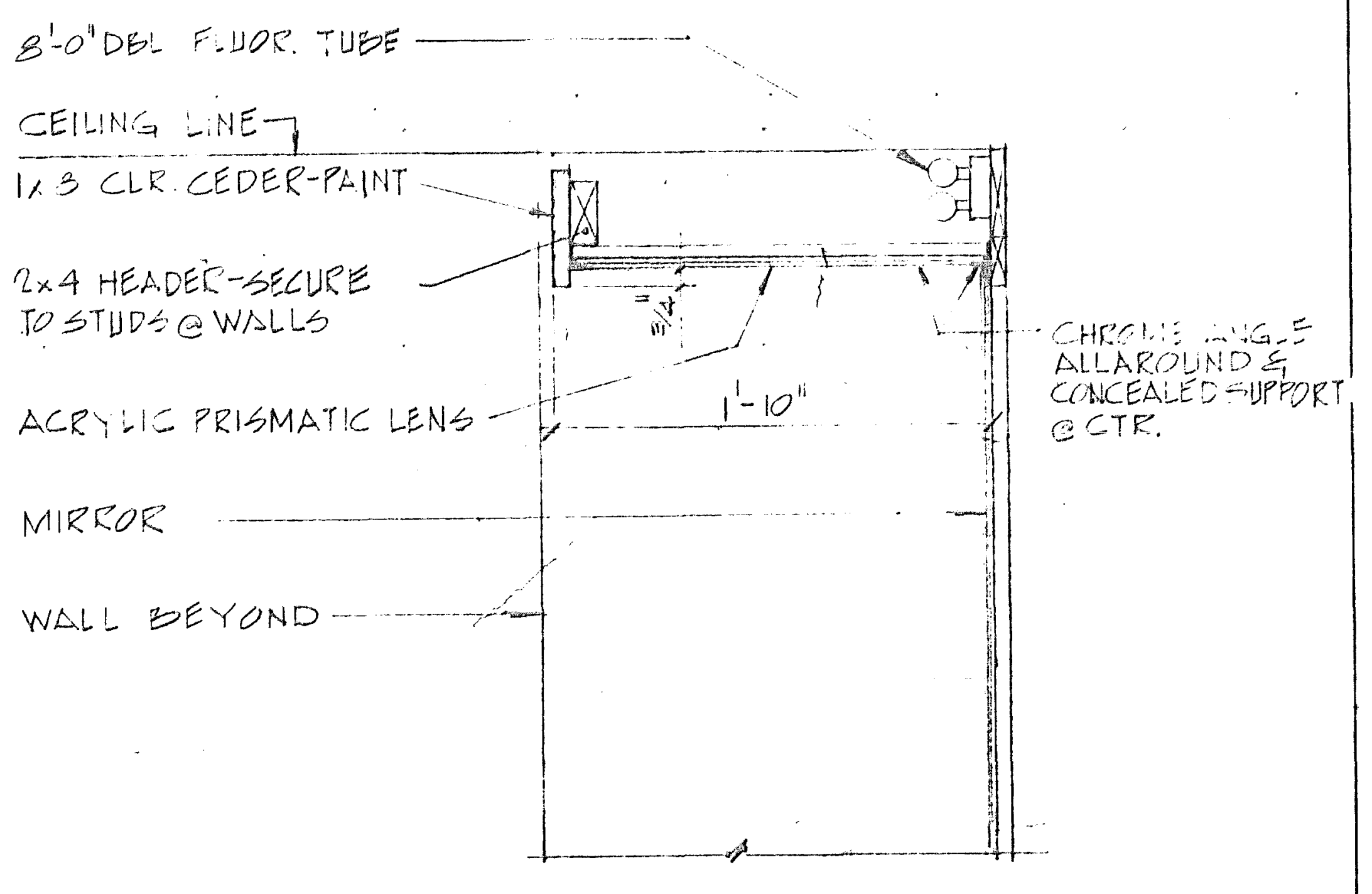
8'-0" DBL FLUOR. TUBE
CEILING LINE
1x3 CLR. CEDER-PAINT
2x4 HEADER-SECURE TO STUDS @ WALLS
ACRYLIC PRISMATIC LENS
MIRROR
WALL BEYOND
CHROME ANGLE ALLAROUND & CONCEALED SUPPORT @ CTR.
1'-10"

BATHROOM LIGHT SOFFIT SCALE: 1½"=1'-0" 3

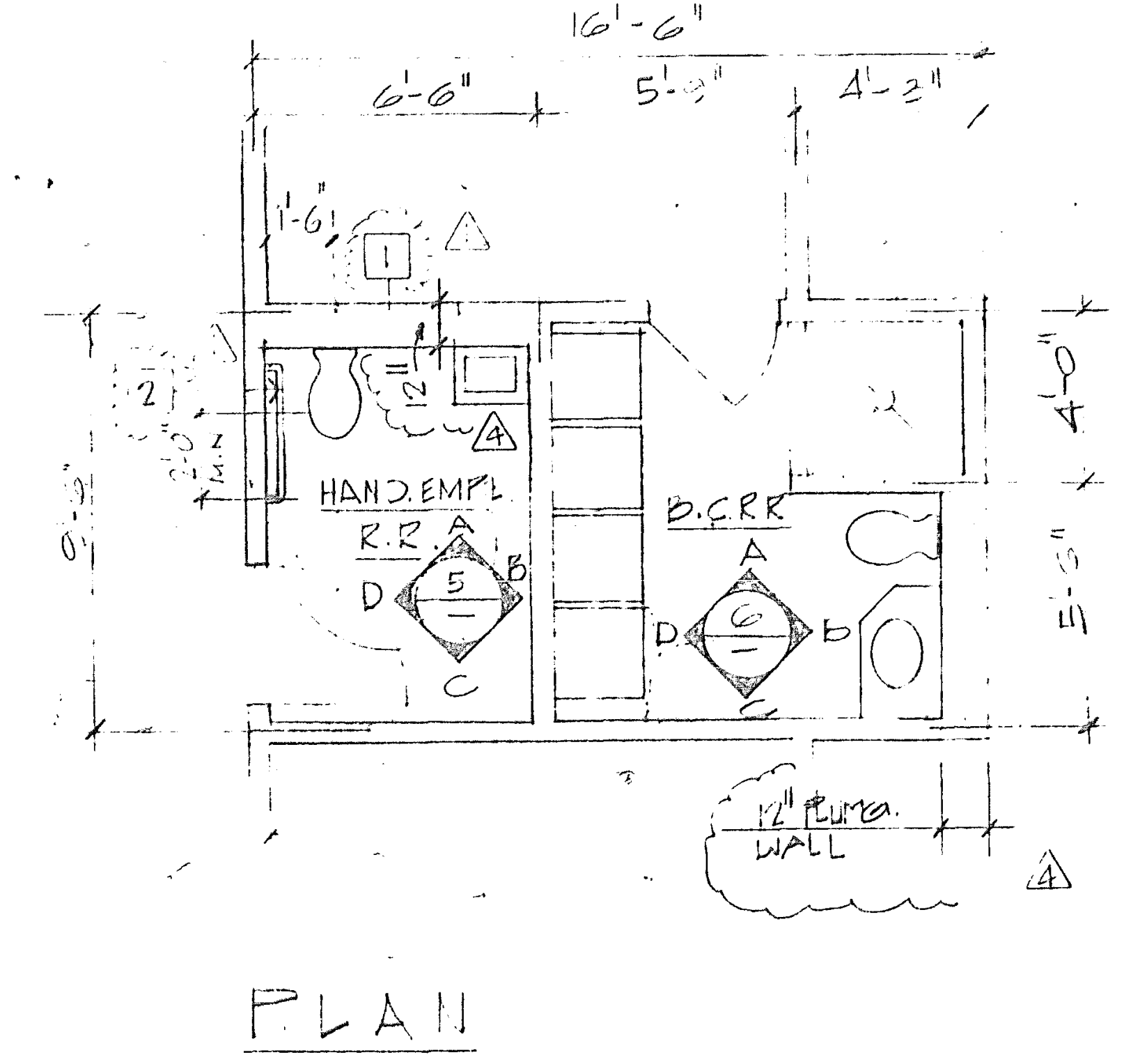
16'-6"
6'-6"
5'-9"
4'-2"
1'-6"
1
2
12
HAND. EMPL. R.R.
B.C.R.R.
5
6
A
B
C
D
4'-0"
5'-6"
12" PLUMB. WALL

PLAN

HANDICAP EMPL & BC BATHROOM 4

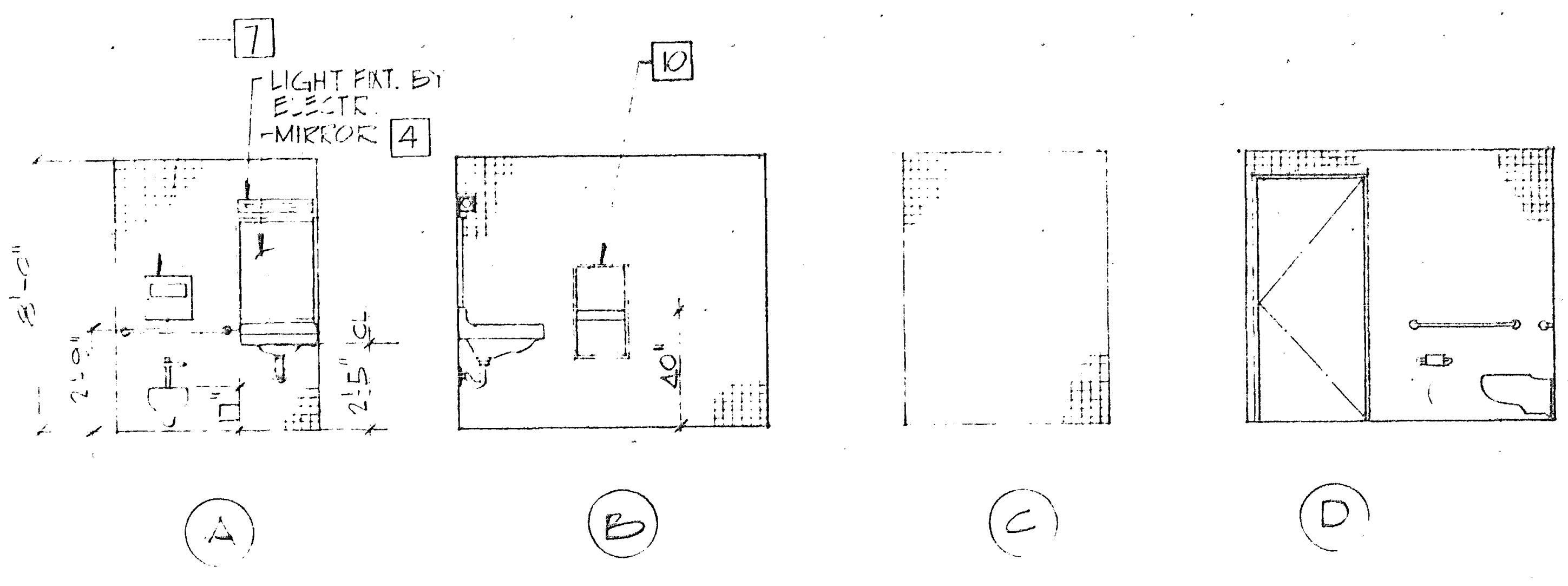
7
LIGHT FIXT. BY ELECTR.
MIRROR 4
10
8'-0"
2'-0"
2'-5"
40"
A
B
C
D

ELEVATIONS -HANDICAP SCALE: 1/4"=1'-0" 5

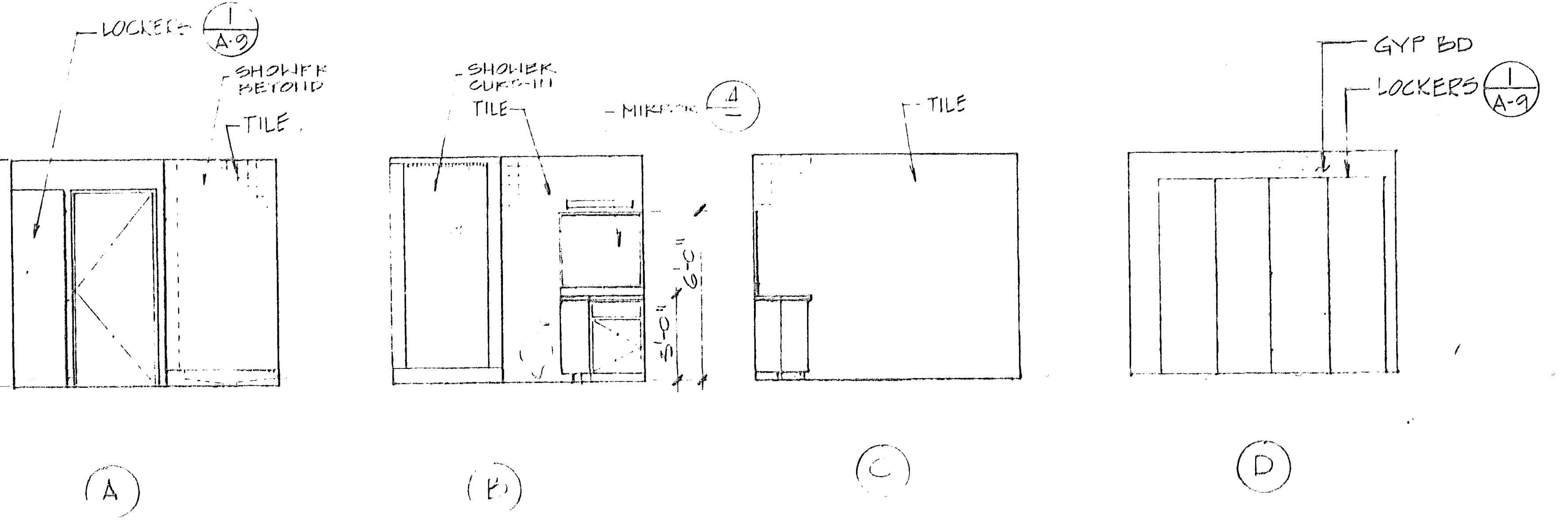
LOCKERS 1/A-9
SHOWER BEYOND
TILE
8'-0"
SHOWER CURTAIN
TILE
MIRROR 4
5'-0"
6'-0"
TILE
GYP BD
LOCKERS 1/A-9
A
B
C
D

ELEVATIONS - BATHROOM REST ROOMS SCALE: 1/4"=1'-0" 6

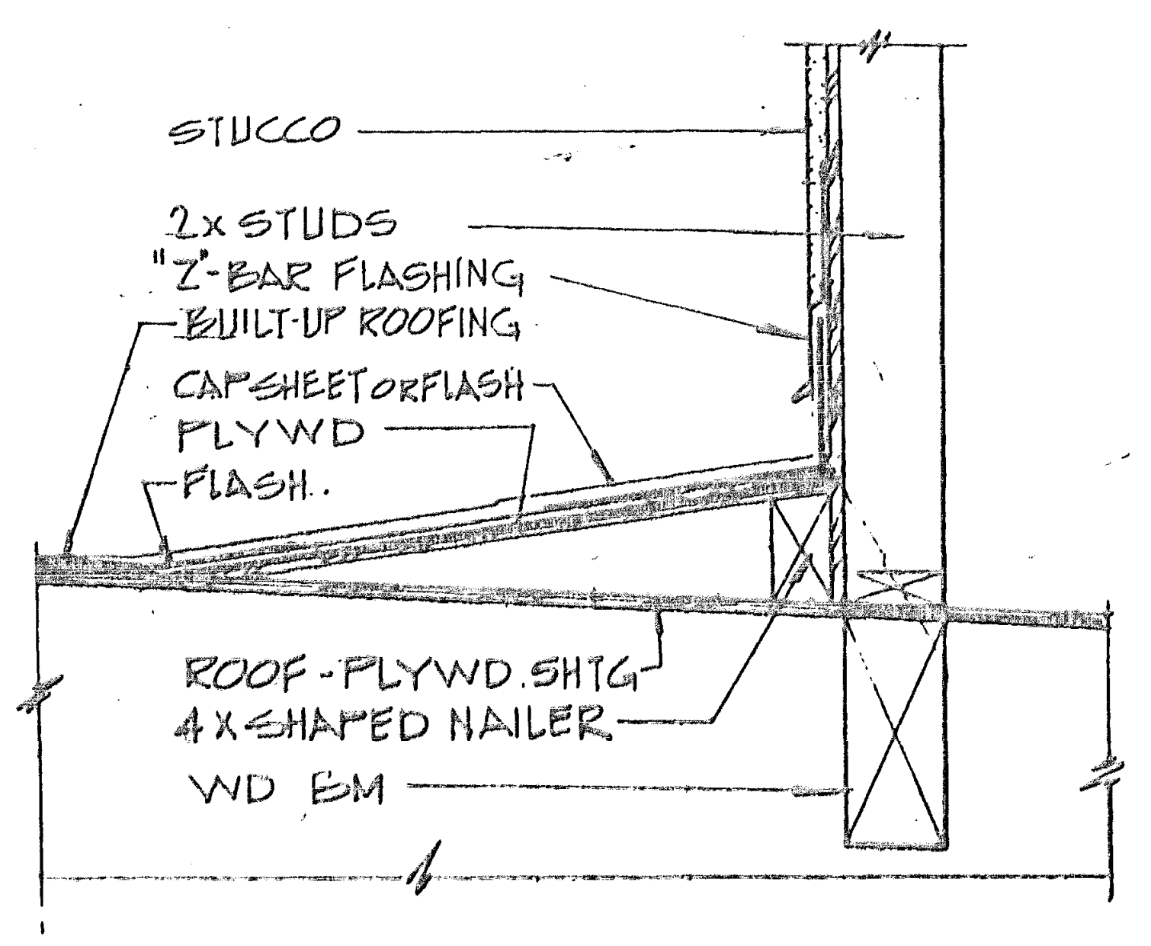
STUCCO
2x STUDS
"Z"-BAR FLASHING
BUILT-UP ROOFING
CAPSHEET OR FLASH
PLYWD
FLASH.
ROOF-PLYWD. SHTG
4x SHAPED NAILER
WD BM

CRICKET DETAIL 1½"=1'-0" 7

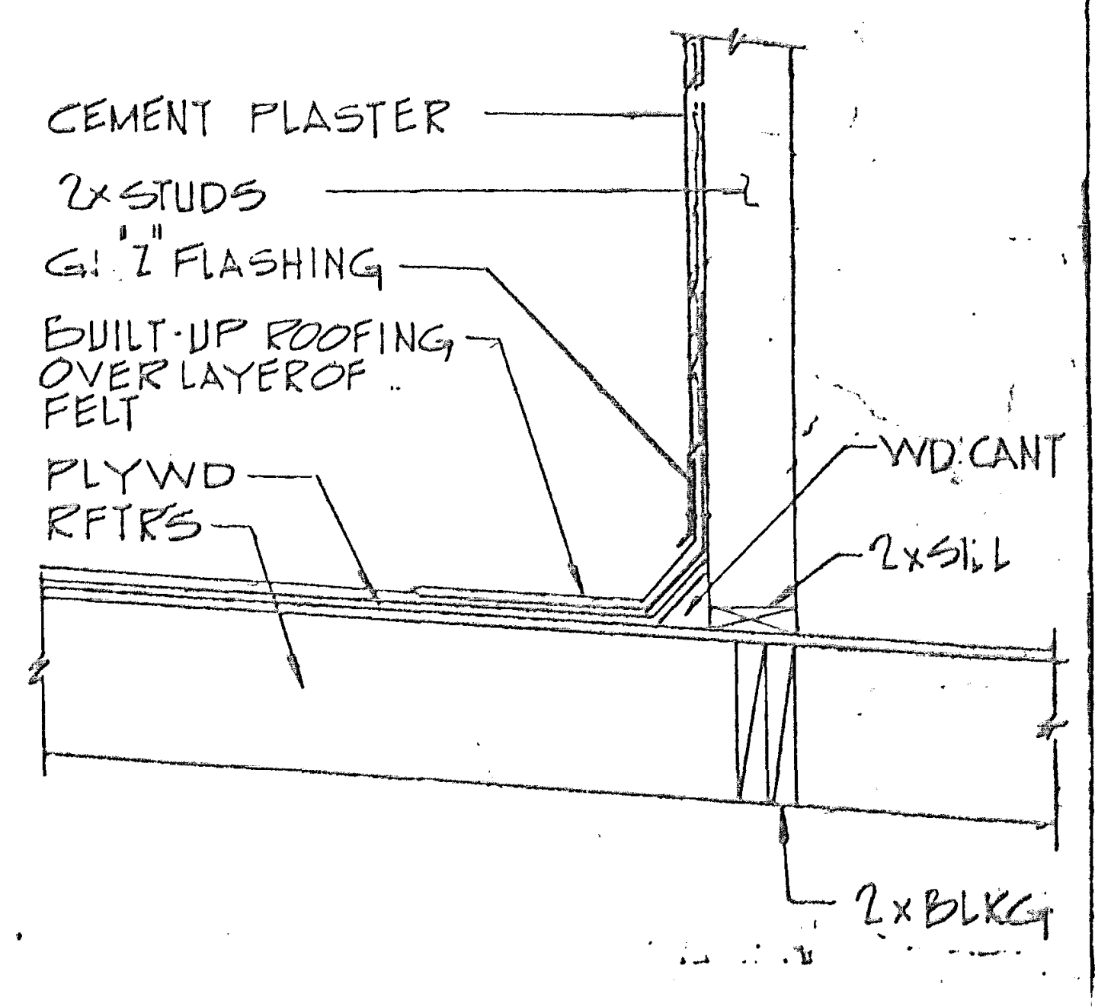
CEMENT PLASTER
2x STUDS
G.I. "Z" FLASHING
BUILT-UP ROOFING OVER LAYER OF FELT
PLYWD
RFTRS
WD CANT
2x SILL
2x BLKG

ROOF FLASHING DET. 8

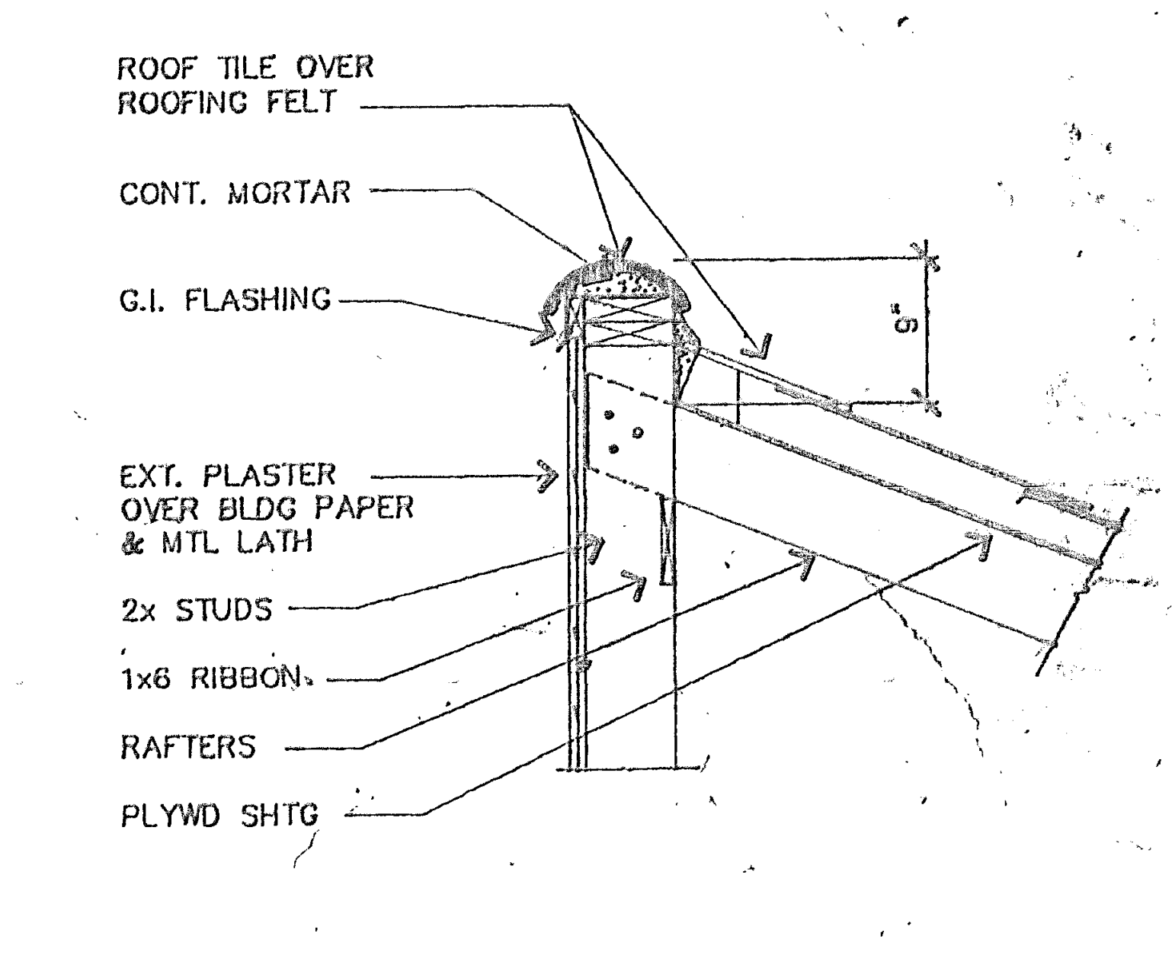
ROOF TILE OVER ROOFING FELT
CONT. MORTAR
G.I. FLASHING
EXT. PLASTER OVER BLDG PAPER & MTL LATH
2x STUDS
1x6 RIBBON
RAFTERS
PLYWD SHTG
5"

PARAPIT & TILE ROOF 9

PLAN NO. 90781-1703

McCULLOCH ARCHITECTS
260 Newport Center Drive
Suite 330
Newport Beach
California 92660
714 759-9141

THESE DRAWINGS REPRESENT AS-BUILT CONDITIONS TO THE BEST OF OUR KNOWLEDGE BASED UPON VISUAL INSPECTION OF THE BUILDING DURING OCTOBER 1989.
WILLIAM C. McCULLOCH
ARCHITECT

INTERIOR ELEVATIONS-RESTROOMS & KITCHEN
SANTA MARGARITA FIRE STATION #45
30[illegible] VENTURA AVENUE
[illegible]
SANTA MARGARITA CA

Project No.
Designer
Drawn by
Date 11-1-89 AS-BUILT
Scale

Revisions	By	Date
1 BLDG. DEPT.	JB	1-23-90
4 A/E	AE	10-20-90

Sheet A-8 of Sheets

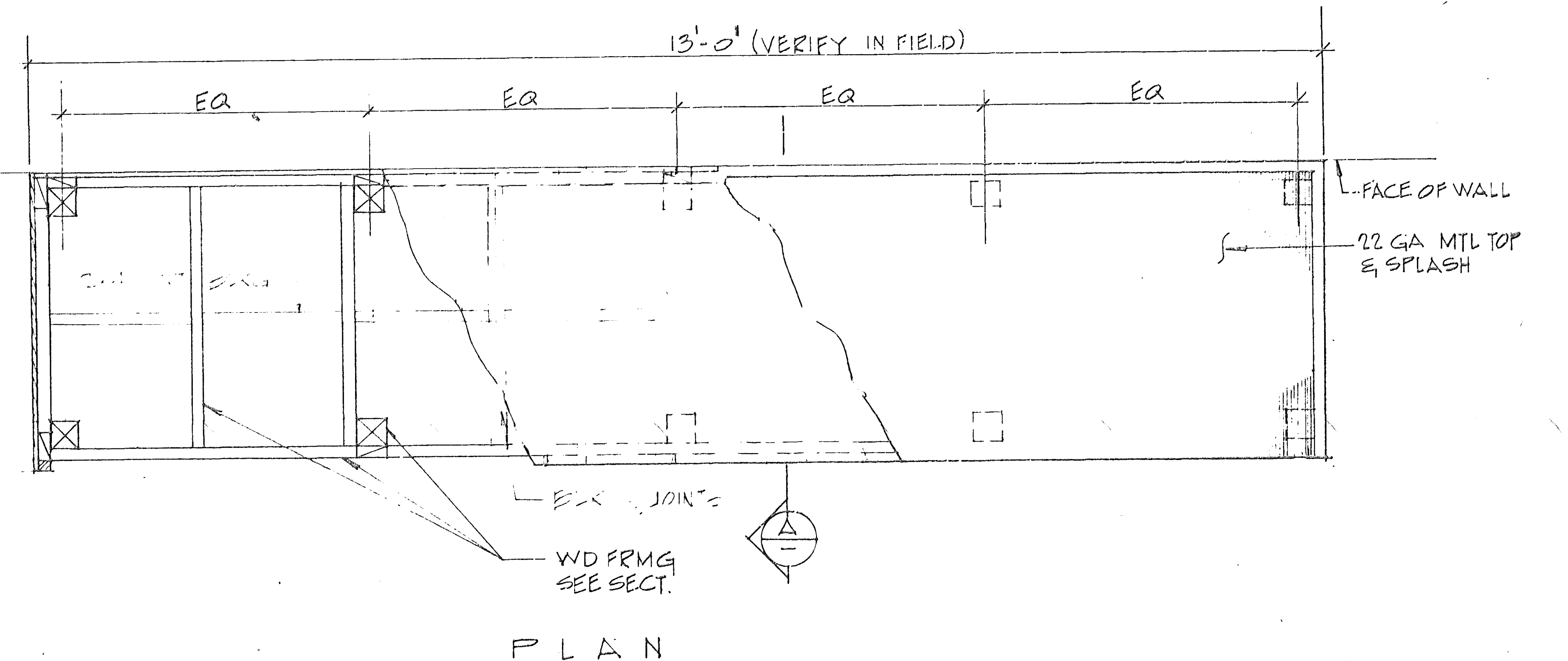
13'-0" (VERIFY IN FIELD)
EQ
EQ
EQ
EQ
FACE OF WALL
22 GA MTL TOP & SPLASH
5'-0"
EXP. JOINTS
WD FRMG SEE SECT.
A
PLAN

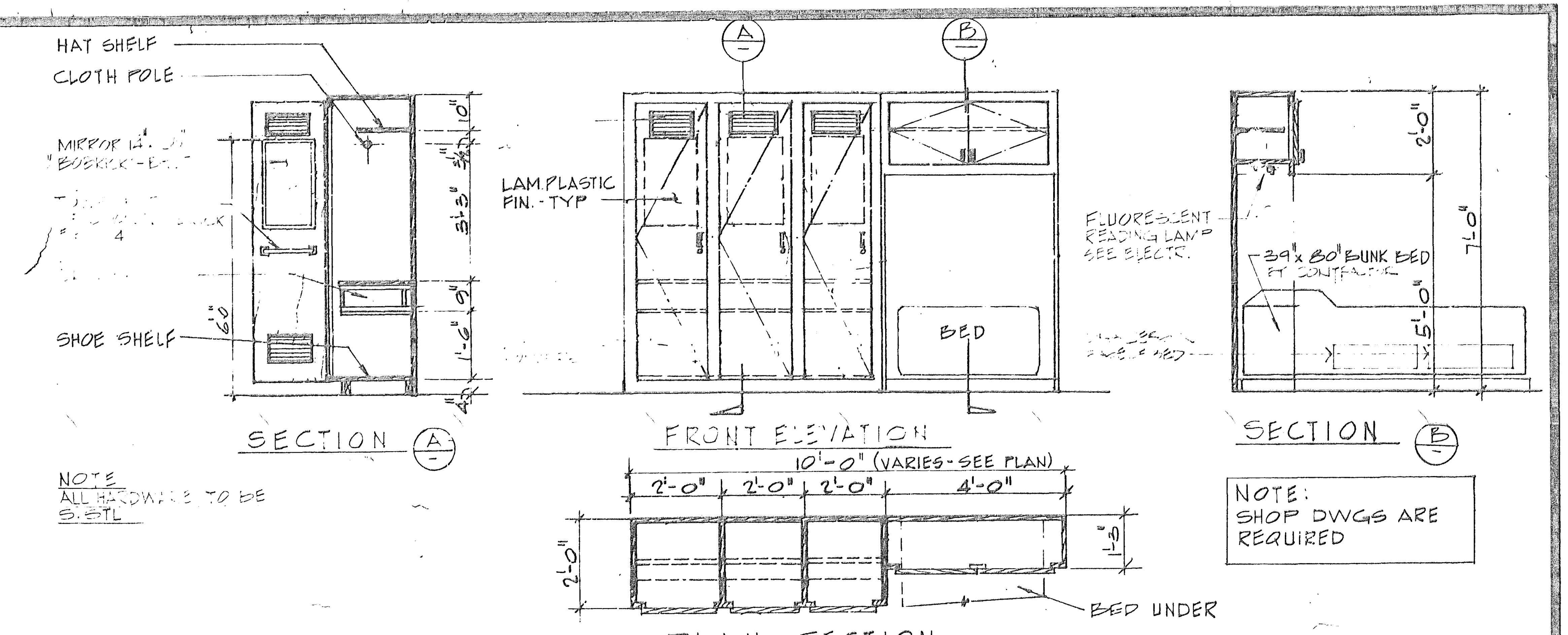
HAT SHELF
CLOTH POLE
MIRROR 14" x 24" "BOBRICK-B..."
SHOE SHELF
10"
3'-3"
9"
1'-6"
6'-0"
4"
SECTION A
NOTE
ALL HARDWARE TO BE S. STL
A
B
LAM. PLASTIC FIN. - TYP
BED
FRONT ELEVATION
10'-0" (VARIES - SEE PLAN)
2'-0"
2'-0"
2'-0"
4'-0"
2'-0"
1'-3"
BED UNDER
PLAN - SECTION
FLUORESCENT READING LAMP SEE ELECT.
39" x 80" BUNK BED
2'-0"
7'-0"
5'-1"
SECTION B
NOTE:
SHOP DWGS ARE REQUIRED

MODULAR BUNK WITH LOCKERS

SCALE: 1/2"=1'-0" ①

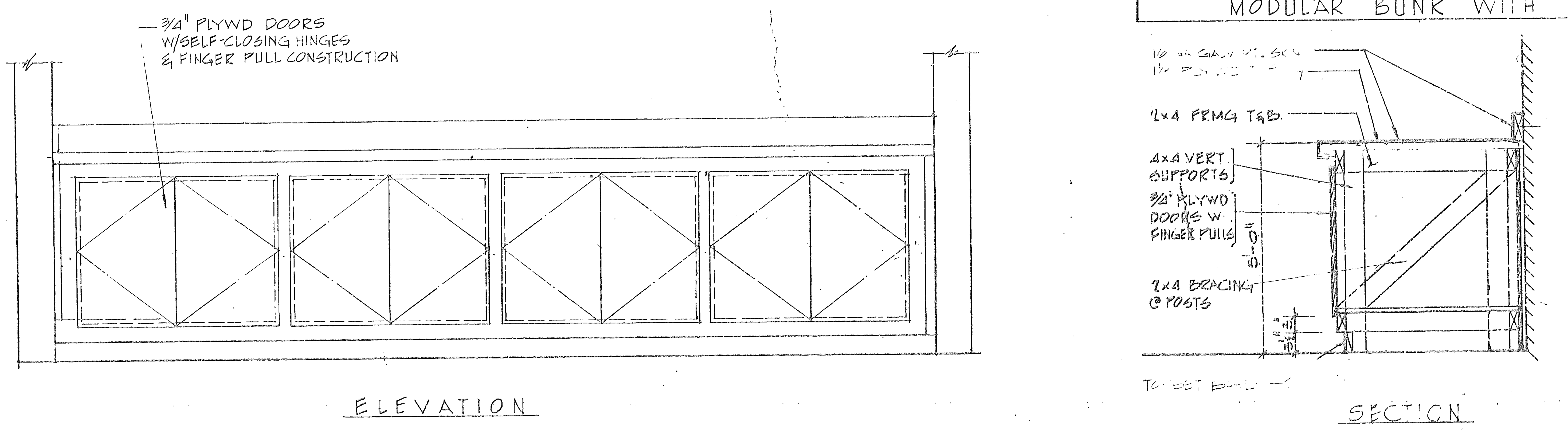
3/4" PLYWD DOORS W/SELF-CLOSING HINGES & FINGER PULL CONSTRUCTION
ELEVATION
16 GA GALV MTL SKN
1½" PLYWD
2x4 FRMG T&B.
4x4 VERT SUPPORTS
3/4" PLYWD DOORS W. FINGER PULLS
3'-0"
2x4 BRACING @ POSTS
TOPSET BASE
SECTION

③

②

WORK BENCH DETAILS

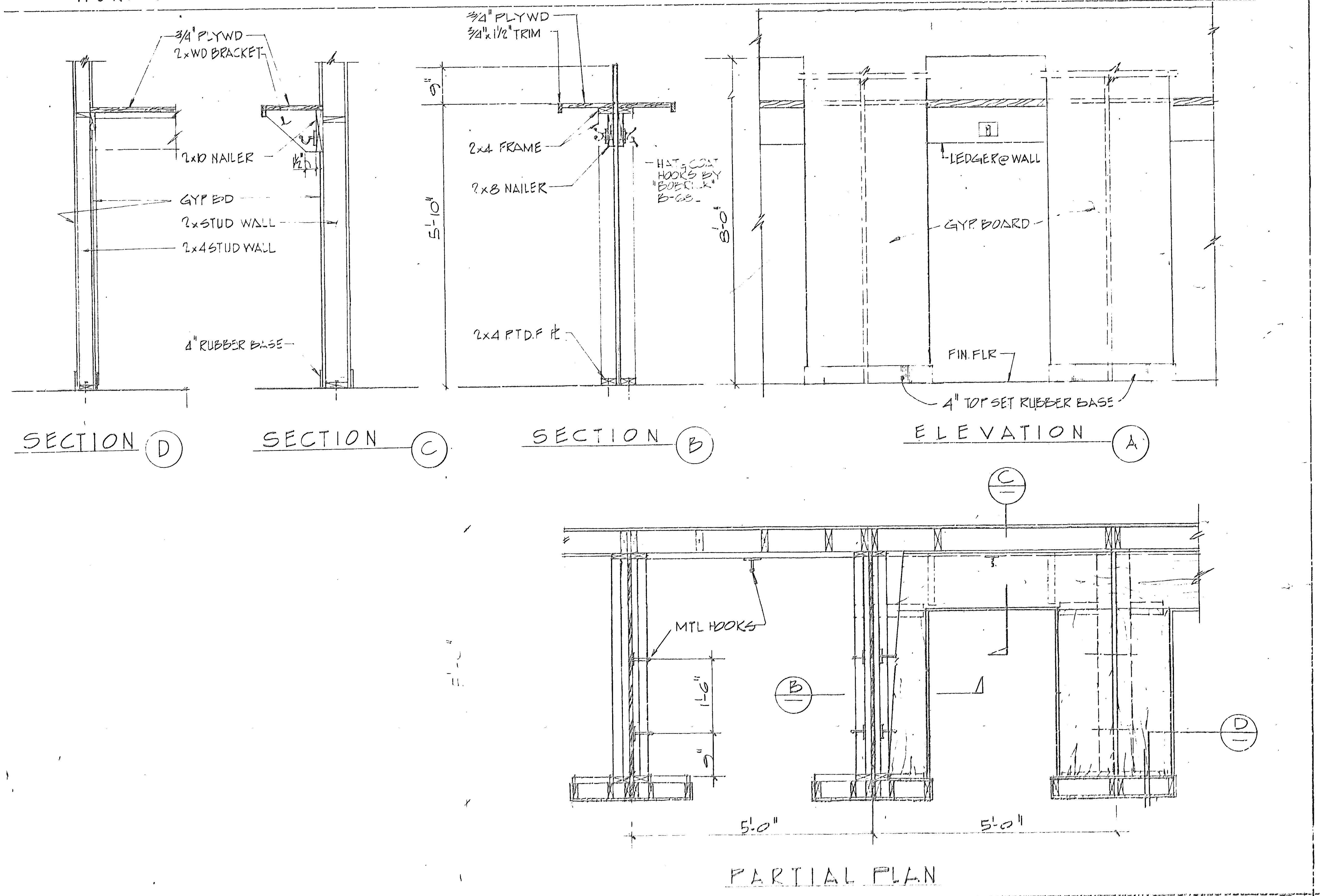
3/4" PLYWD
2x WD BRACKET
2x WD NAILER
GYP BD
2x STUD WALL
2x4 STUD WALL
4" RUBBER BASE
SECTION D
SECTION C
3/4" PLYWD
3/4" x 1½" TRIM
2x4 FRAME
2x8 NAILER
HAT & COAT HOOKS BY
2x4 PTD.F. PL
5'-10"
SECTION B
8'-0"
LEDGER @ WALL
GYP BOARD
FIN. FLR
4" TOP SET RUBBER BASE
ELEVATION A
C
MTL HOOKS
B
D
5'-0"
5'-0"
PARTIAL PLAN

TURN OUT GEAR ALCOVE DETAILS

SCALE: 3/4"=1'-0" ④

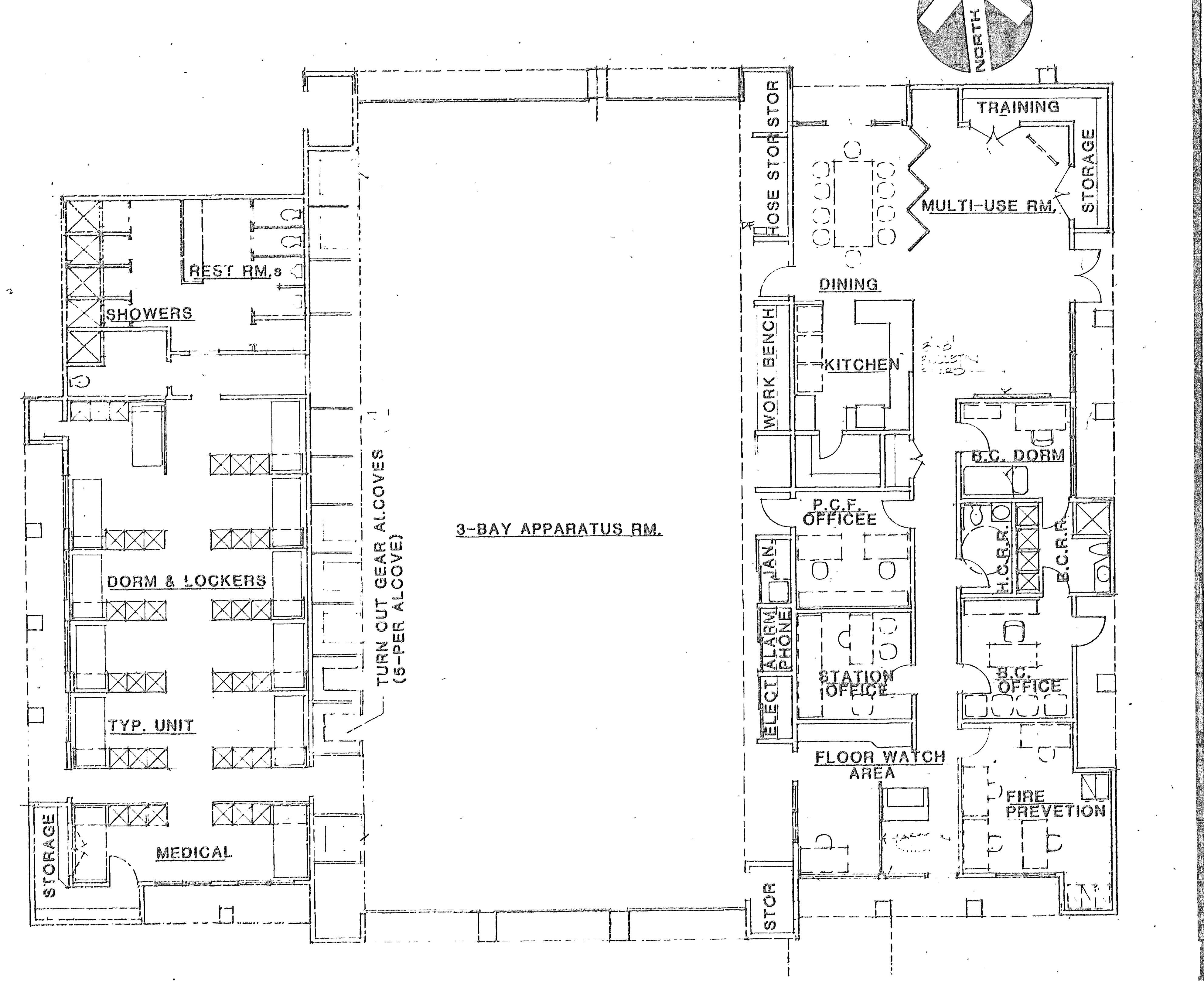
NORTH
TRAINING
STORAGE
MULTI-USE RM.
HOSE STOR
STOR
DINING
WORK BENCH
KITCHEN
BULLETIN BOARD
B.C. DORM
P.C.F. OFFICEE
JAN.
H.C.R.R.
B.C.R.R.
ALARM PHONE
ELECT
STATION OFFICE
B.C. OFFICE
FLOOR WATCH AREA
FIRE PREVETION
STOR
REST RM.s
SHOWERS
DORM & LOCKERS
TYP. UNIT
STORAGE
MEDICAL
TURN OUT GEAR ALCOVES (5-PER ALCOVE)
3-BAY APPARATUS RM.

PLAN NO. 90781-1703

FURNISHING KEY PLAN

SCALE: 1/8"=1'-0"

McCULLOCH ARCHITECTS
260
Newport Center
Drive
Suite 330
Newport Beach
California 92660
714 759-9141

THESE DRAWINGS REPRESENT AS-BUILT CONDITIONS TO THE BEST OF OUR KNOWLEDGE BASED UPON VISUAL INSPECTION OF THE BUILDING DURING OCTOBER 1989.
WILLIAM C. McCULLOCH
ARCHITECT

Brinkerhoff GSD/ALE

FURNISHINGS PLAN & INTERIOR DETAILS

SANTA MARGARITA FIRE STATION #45

30131 AVENTURA AVENUE
RANCHO SANTA MARGARITA
SANTA MARGARITA, CA

Project No.
Designer
Drawn by
Date 11-1-89 AS-BUILT
Scale

Revisions	By	Date

Sheet
A-9
of Sheets

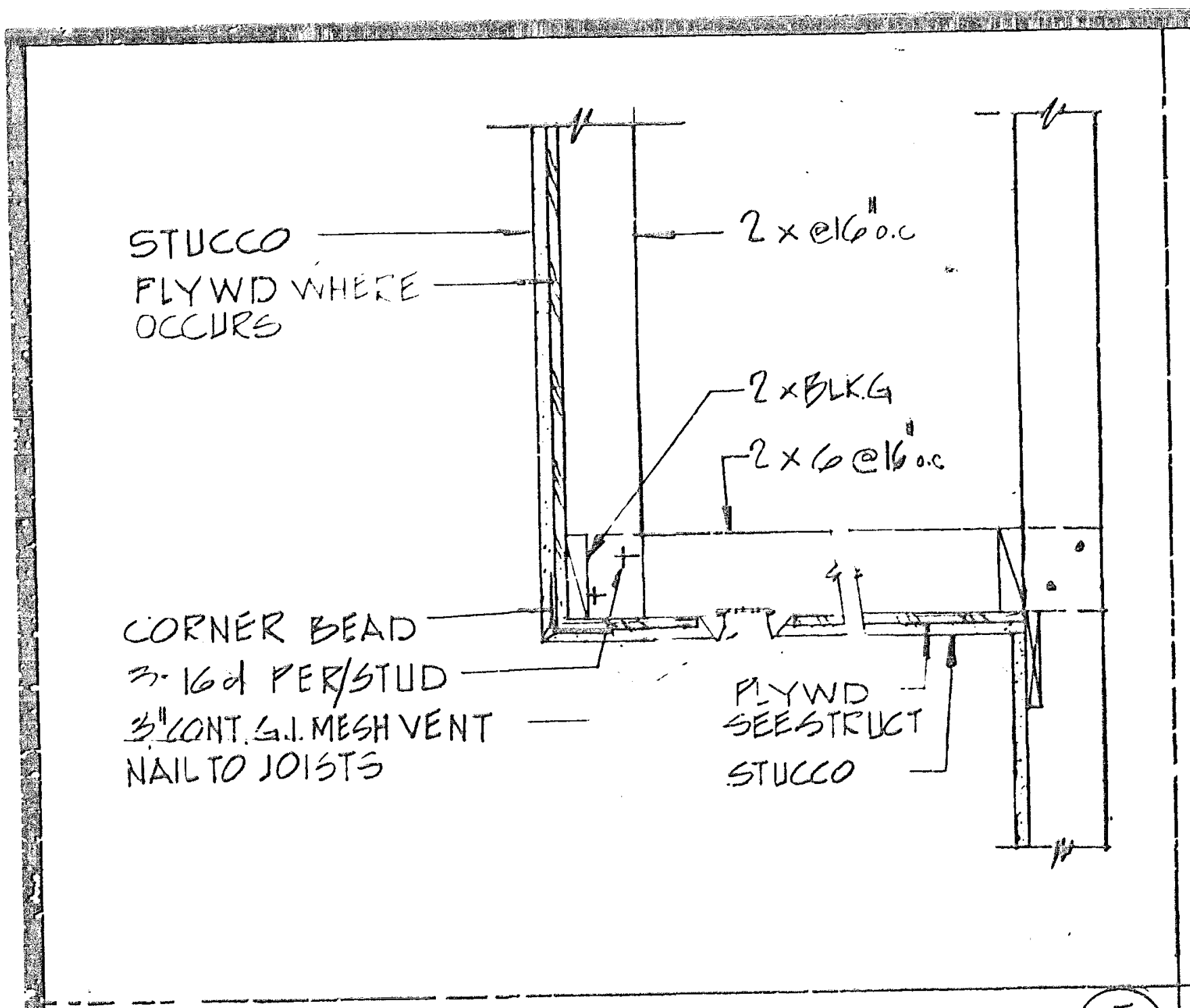
STUCCO
PLYWD WHERE OCCURS
2x6@16" o.c.
2xBLKG
2x6@16" o.c.
CORNER BEAD
3-16d PER STUD
3" CONT. G.I. MESH VENT NAIL TO JOISTS
PLYWD SEE STRUCT
STUCCO

SOFFIT DETAIL 1"=1'-0" (5)

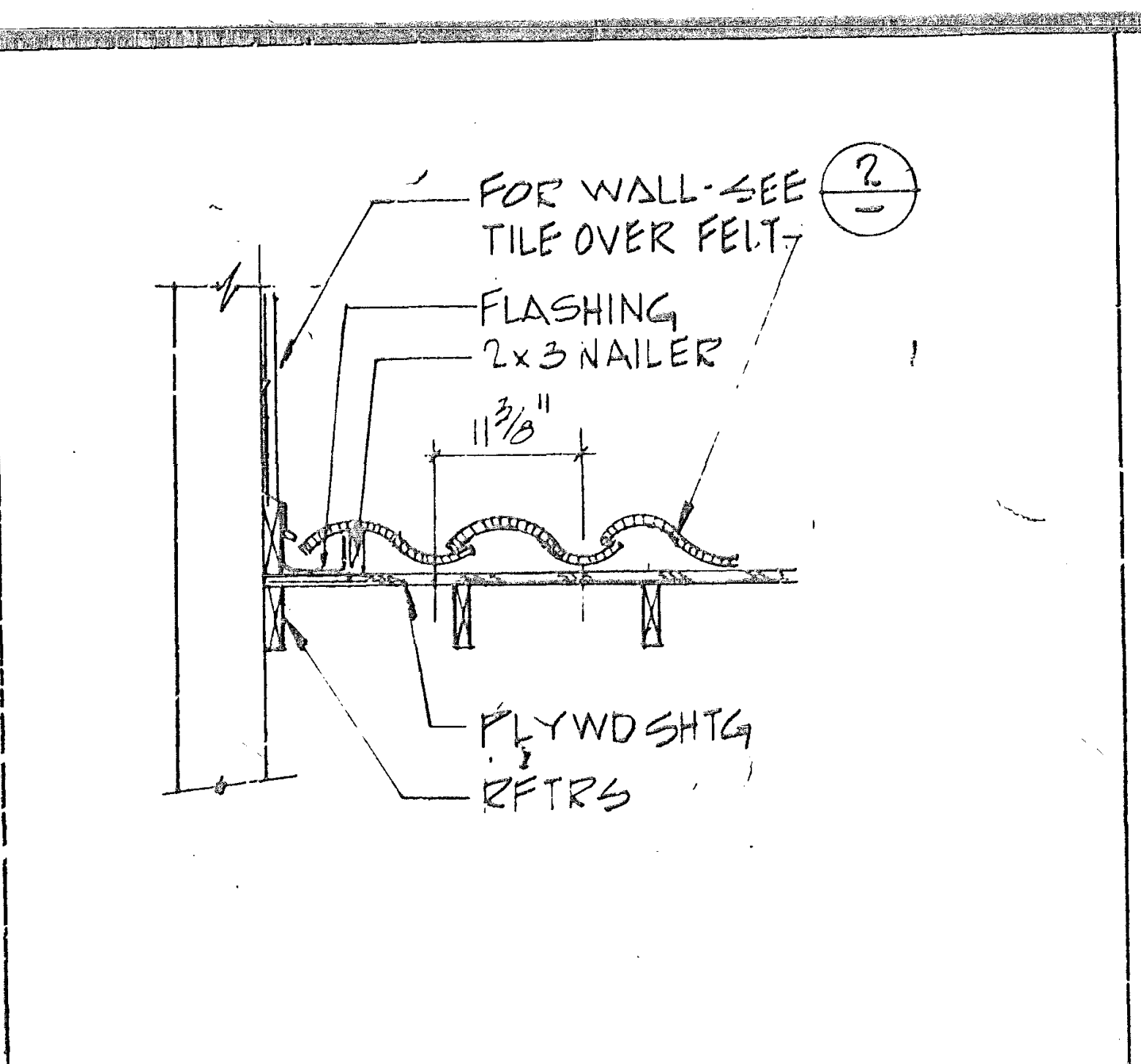
FOR WALL-SEE
TILE OVER FELT
2
FLASHING
2x3 NAILER
11 3/8"
PLYWD SHTG
RFTRS

TILE ROOF AT WALL 1½"=1'-0" (4)

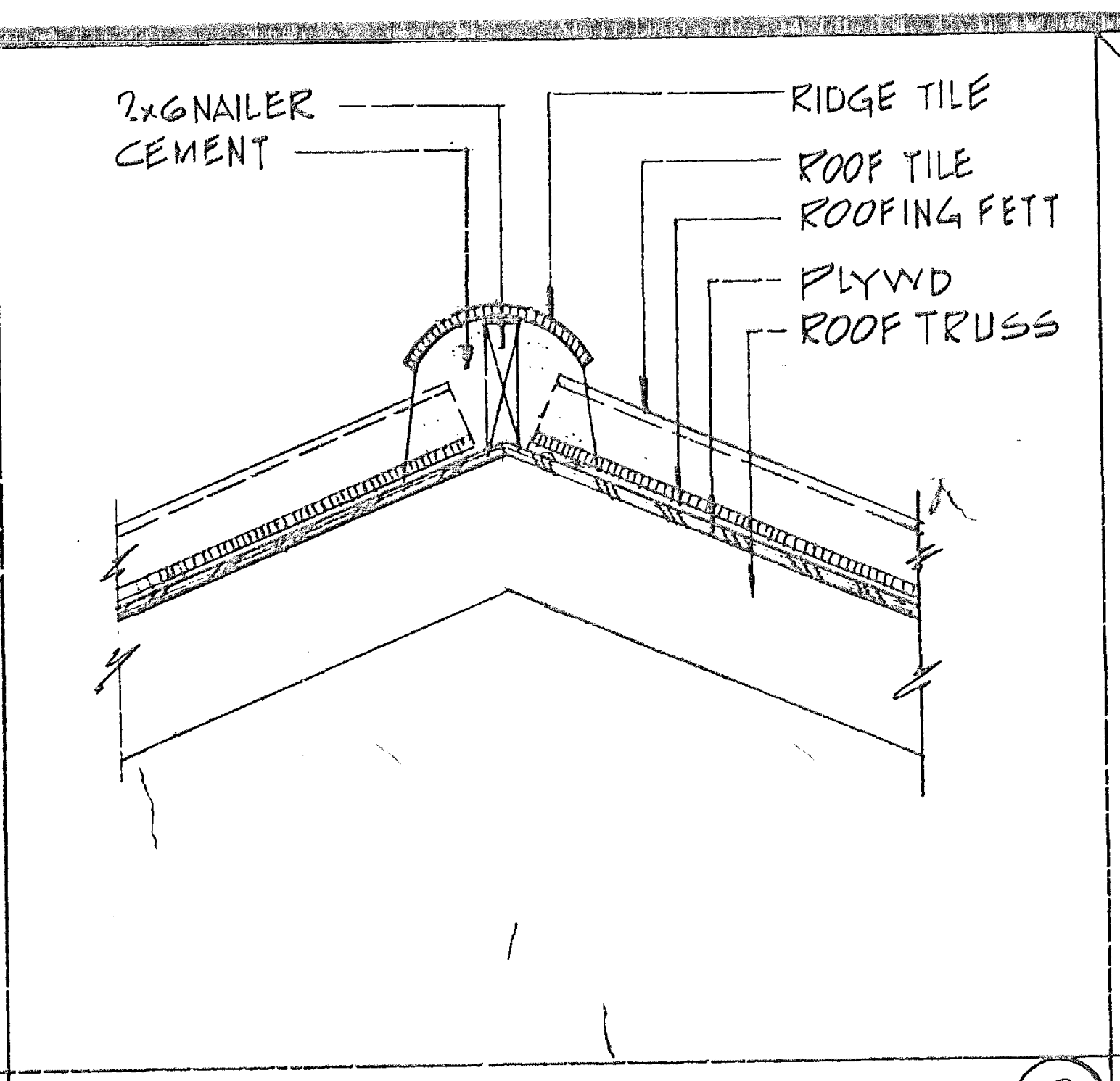
2x6 NAILER
CEMENT
RIDGE TILE
ROOF TILE
ROOFING FELT
PLYWD
ROOF TRUSS

RIDGE DETAIL 1½"=1'-0" (3)

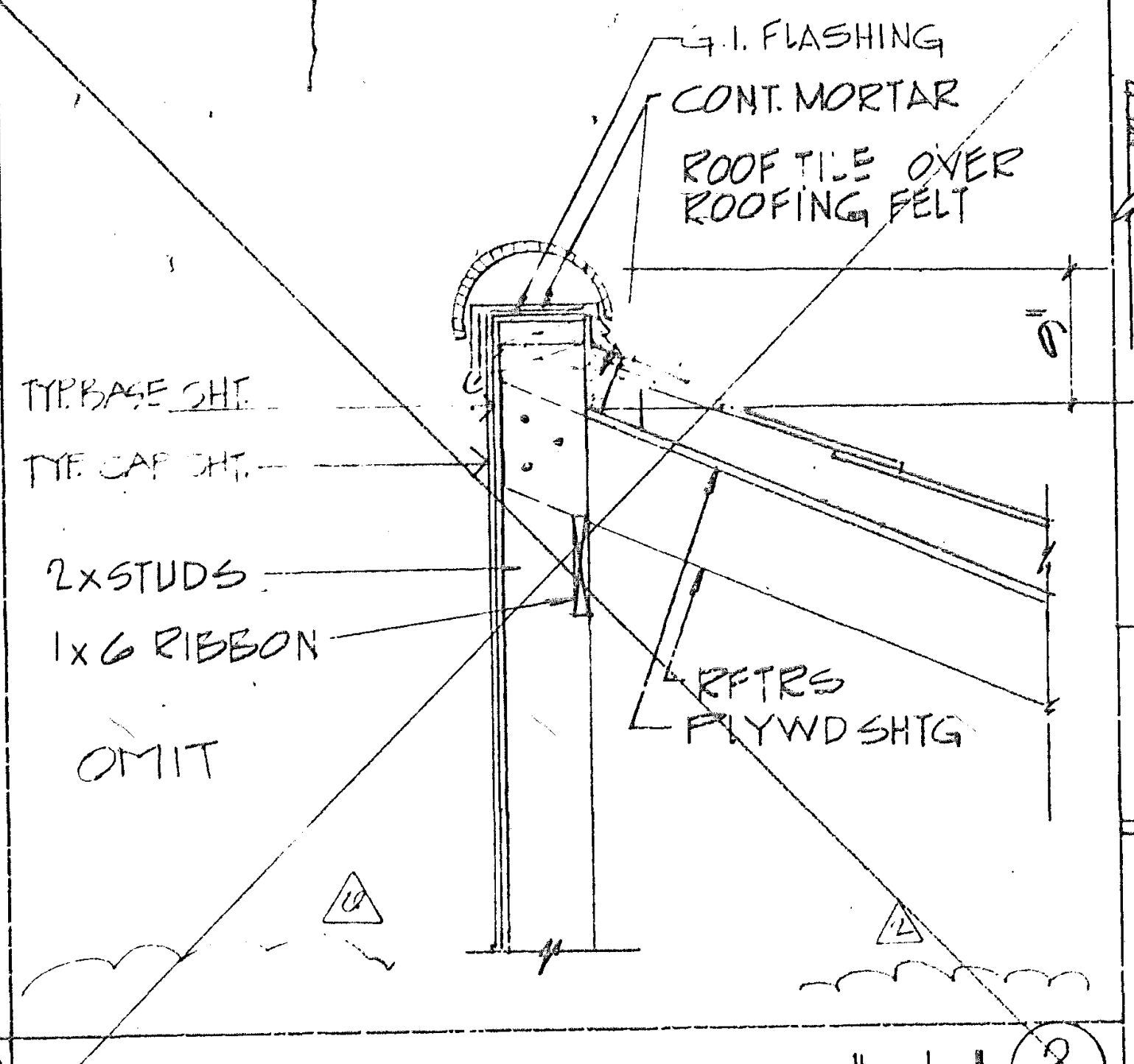
G.I. FLASHING
CONT. MORTAR
ROOF TILE OVER ROOFING FELT
TYP BASE SHT
TYP CAP SHT
2xSTUDS
1x6 RIBBON
RFTRS
PLYWD SHTG
OMIT

PARAPET @ TILE ROOF 1"=1'-0" (2)

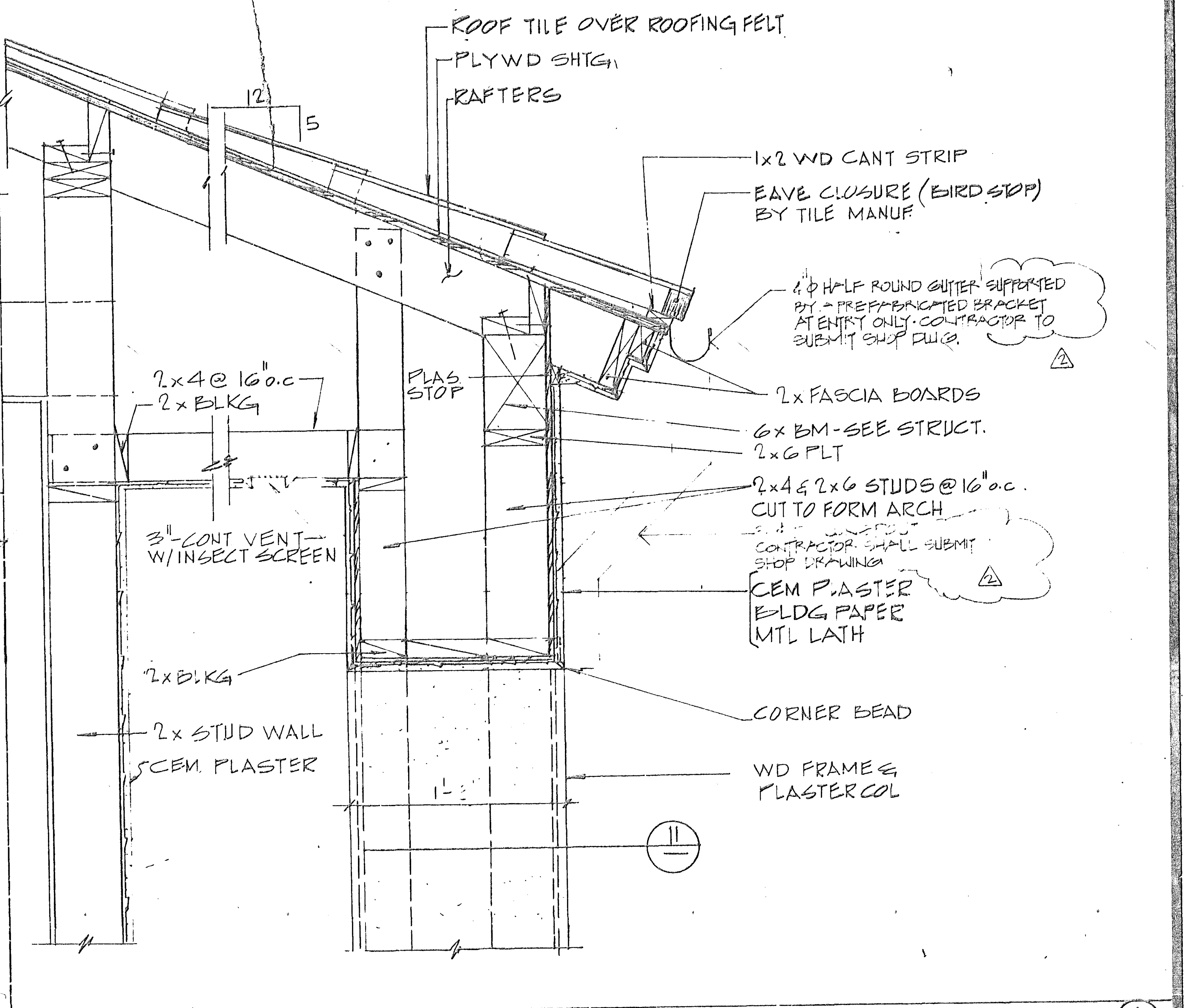
ROOF TILE OVER ROOFING FELT
PLYWD SHTG
RAFTERS
12
5
1x2 WD CANT STRIP
EAVE CLOSURE (BIRD STOP) BY TILE MANUF
4" Ø HALF ROUND GUTTER SUPPORTED BY PREFABRICATED BRACKET AT ENTRY ONLY. CONTRACTOR TO SUBMIT SHOP DWG.
2x FASCIA BOARDS
2x4 @ 16" o.c.
2xBLKG
PLAS STOP
6x BM-SEE STRUCT.
2x6 PLT
2x4 & 2x6 STUDS @ 16" o.c. CUT TO FORM ARCH
CONTRACTOR SHALL SUBMIT SHOP DRAWING
3" CONT VENT W/INSECT SCREEN
CEM. PLASTER
BLDG PAPER
MTL LATH
2xBLKG
2x STUD WALL
CEM. PLASTER
CORNER BEAD
WD FRAME & PLASTER COL
11

TYPICAL CORNICE DETAIL 1½"=1'-0" (1)

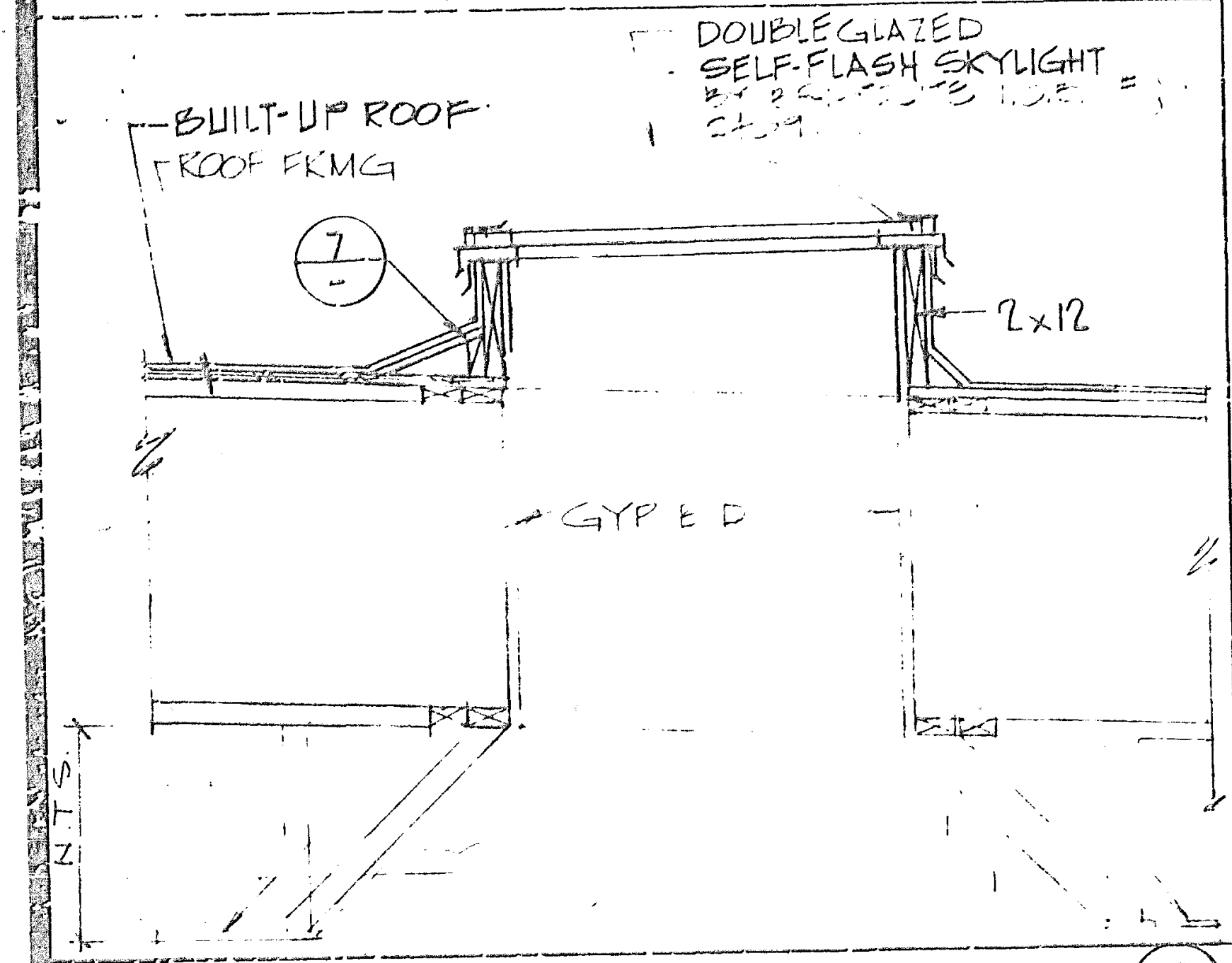
DOUBLE GLAZED SELF-FLASH SKYLIGHT
BUILT-UP ROOF
ROOF FRMG
7
2x12
GYP BD

SKYLIGHT DET. 3/4"=1'-0" (9)

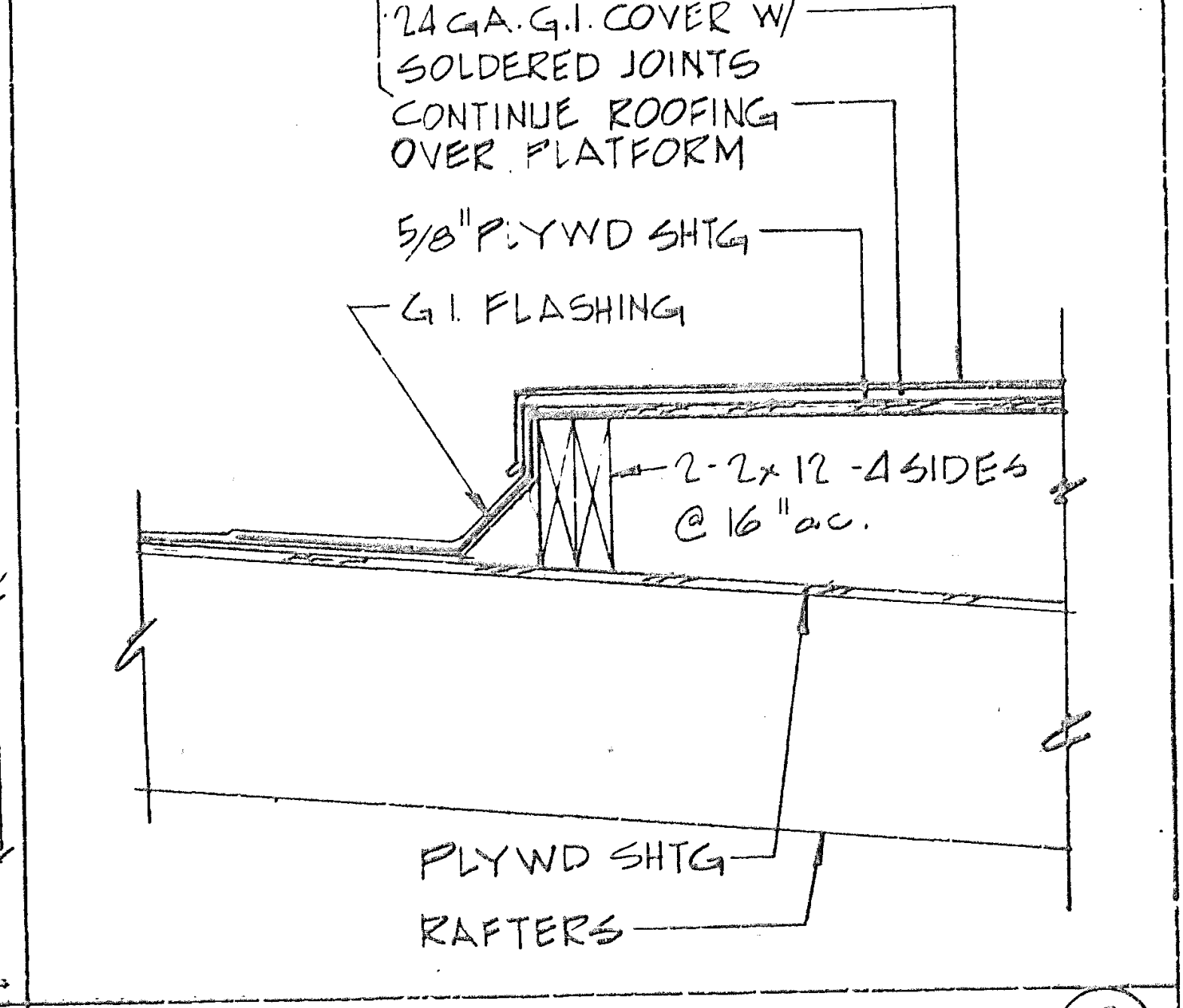
24 GA. G.I. COVER W/ SOLDERED JOINTS
CONTINUE ROOFING OVER PLATFORM
5/8" PLYWD SHTG
G.I. FLASHING
2-2x12 - 4 SIDES @ 16" o.c.
PLYWD SHTG
RAFTERS

MECH. EQUIPM. PLATFORM 1½"=1'-0" (8)

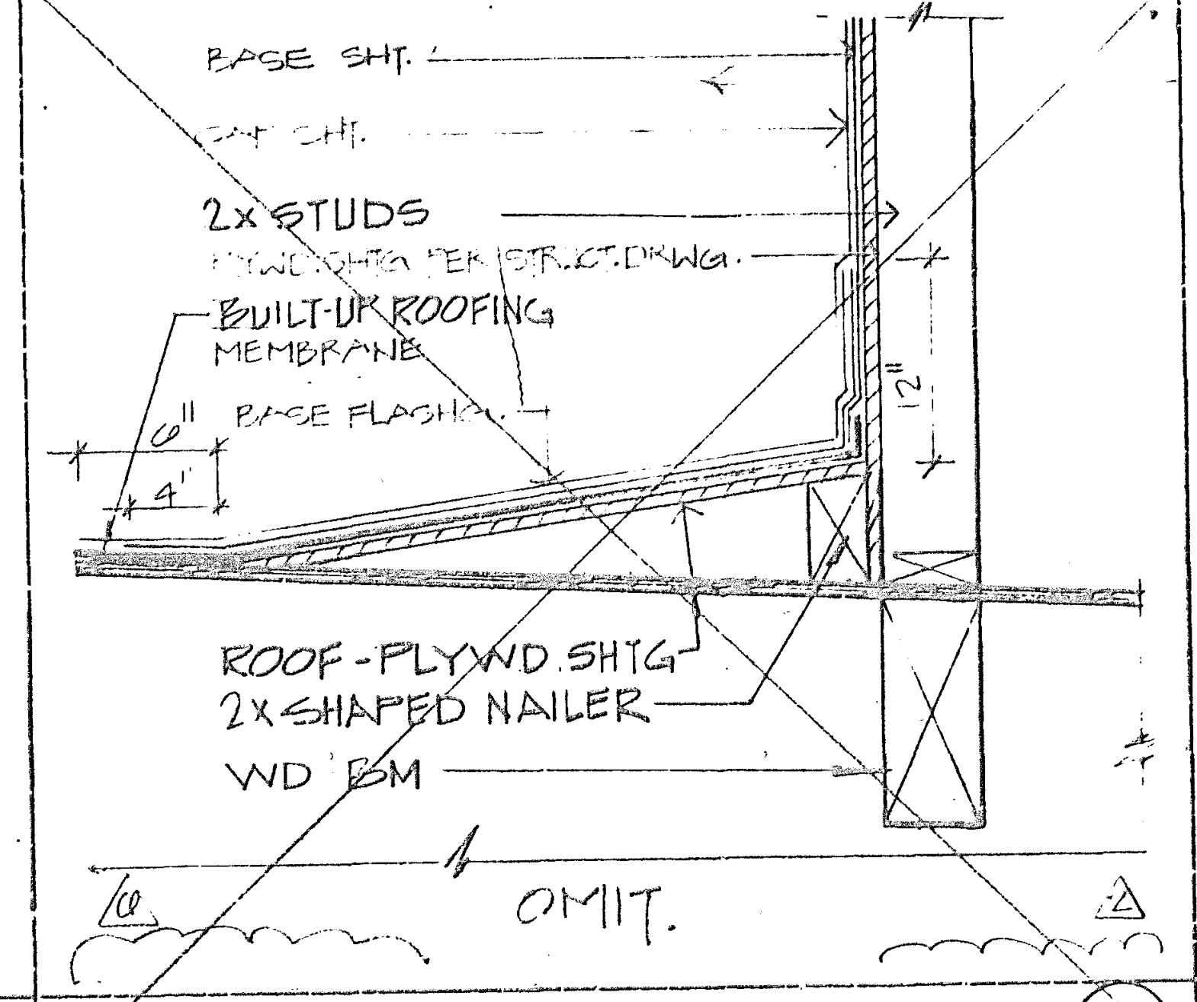
BASE SHT.
CAP SHT.
2x STUDS
BUILT-UP ROOFING MEMBRANE
BASE FLASHING
ROOF-PLYWD SHTG
2x SHAPED NAILER
WD BM
OMIT.

CRICKET DET. 1½"=1'-0" (7)

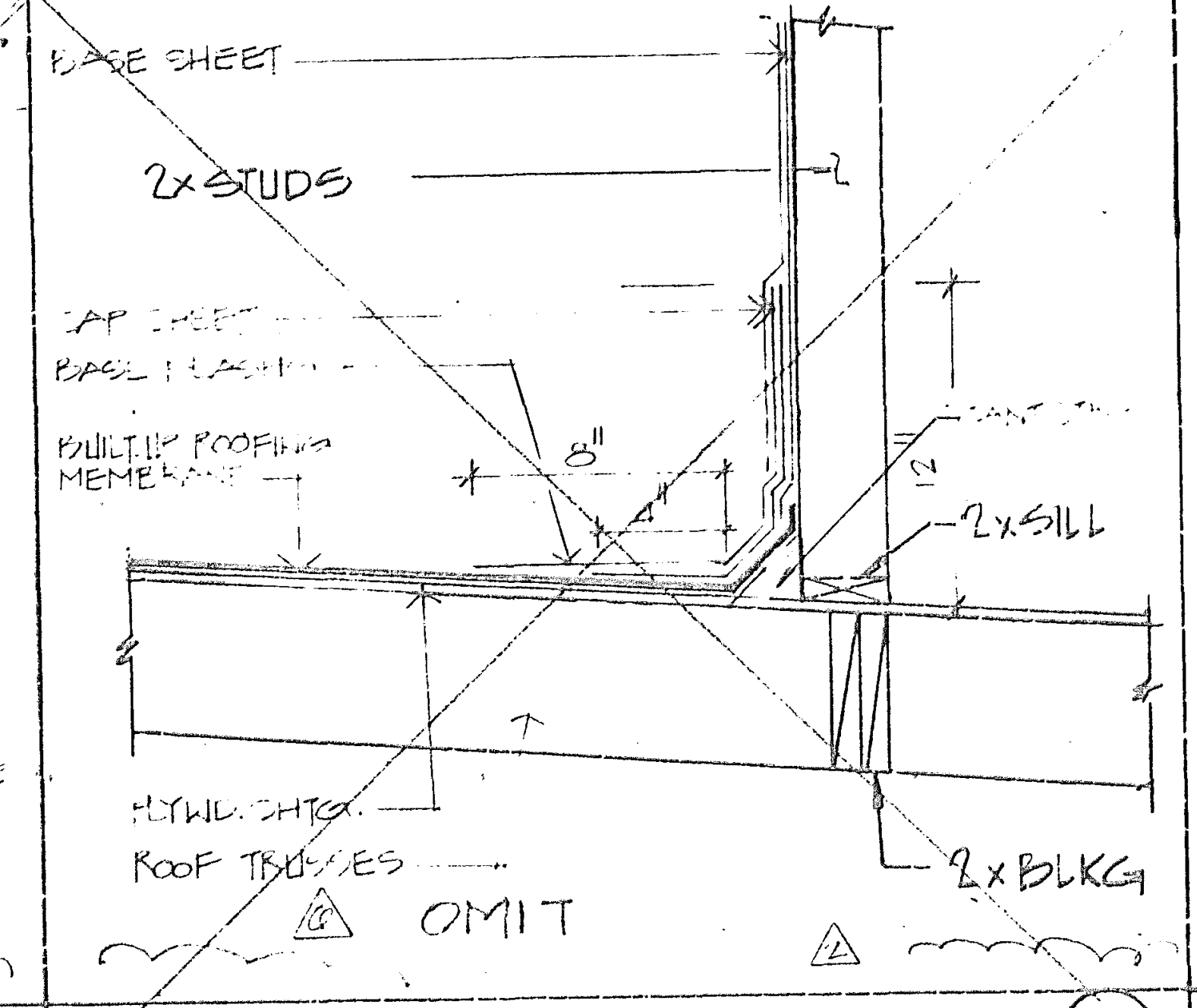
BASE SHEET
2x STUDS
CAP SHEET
BASE FLASHING
BUILT-UP ROOFING MEMBRANE
2x SILL
PLYWD SHTG
ROOF TRUSSES
OMIT
2x BLKG

ROOF FLASHING DET. 1½"=1'-0" (6)

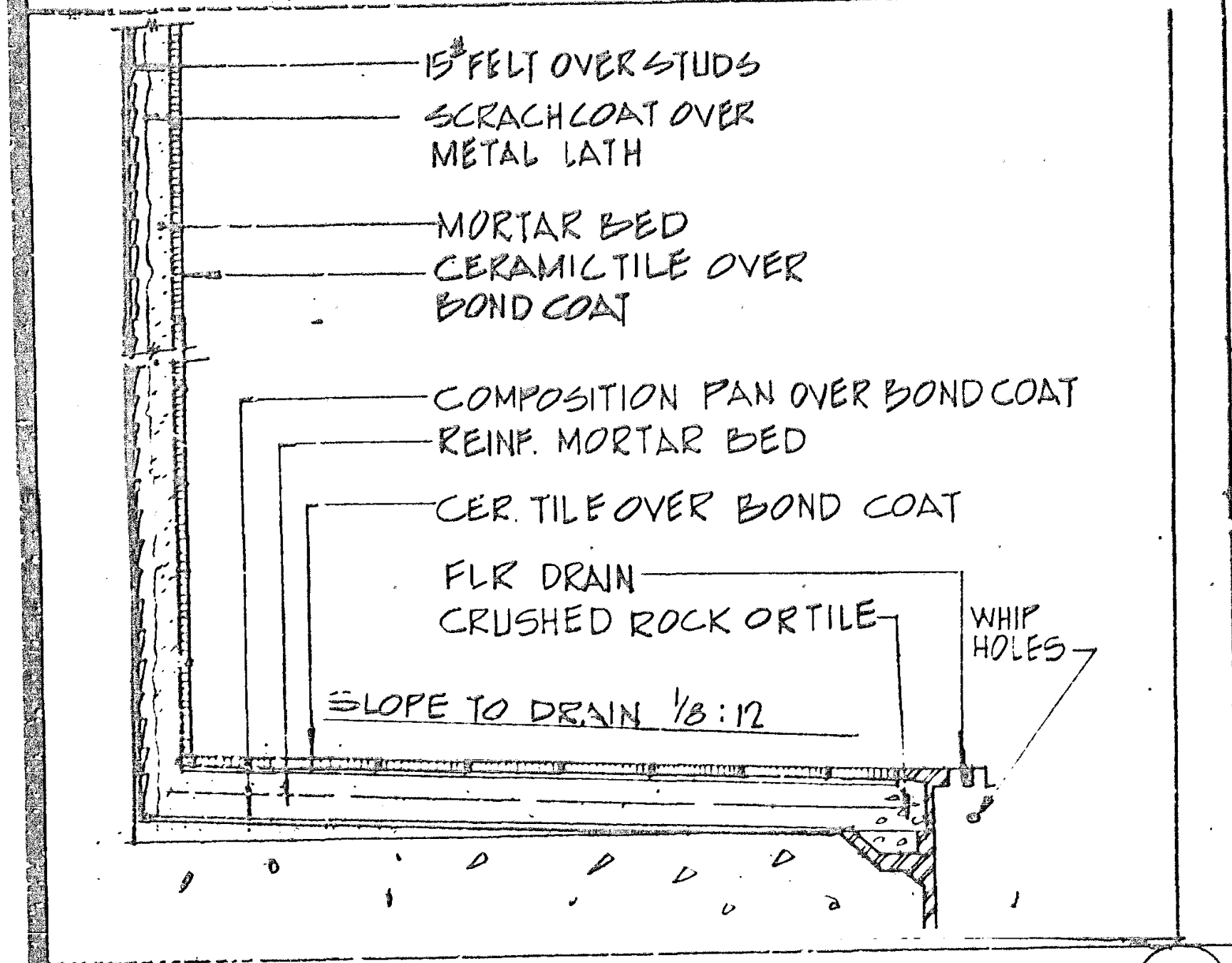
15# FELT OVER STUDS
SCRATCHCOAT OVER METAL LATH
MORTAR BED
CERAMIC TILE OVER BOND COAT
COMPOSITION PAN OVER BOND COAT
REINF. MORTAR BED
CER. TILE OVER BOND COAT
FLR DRAIN
CRUSHED ROCK OR TILE
WHIP HOLES
SLOPE TO DRAIN 1/8:12

SHOWER DETAIL 3"=1'-0" (14)

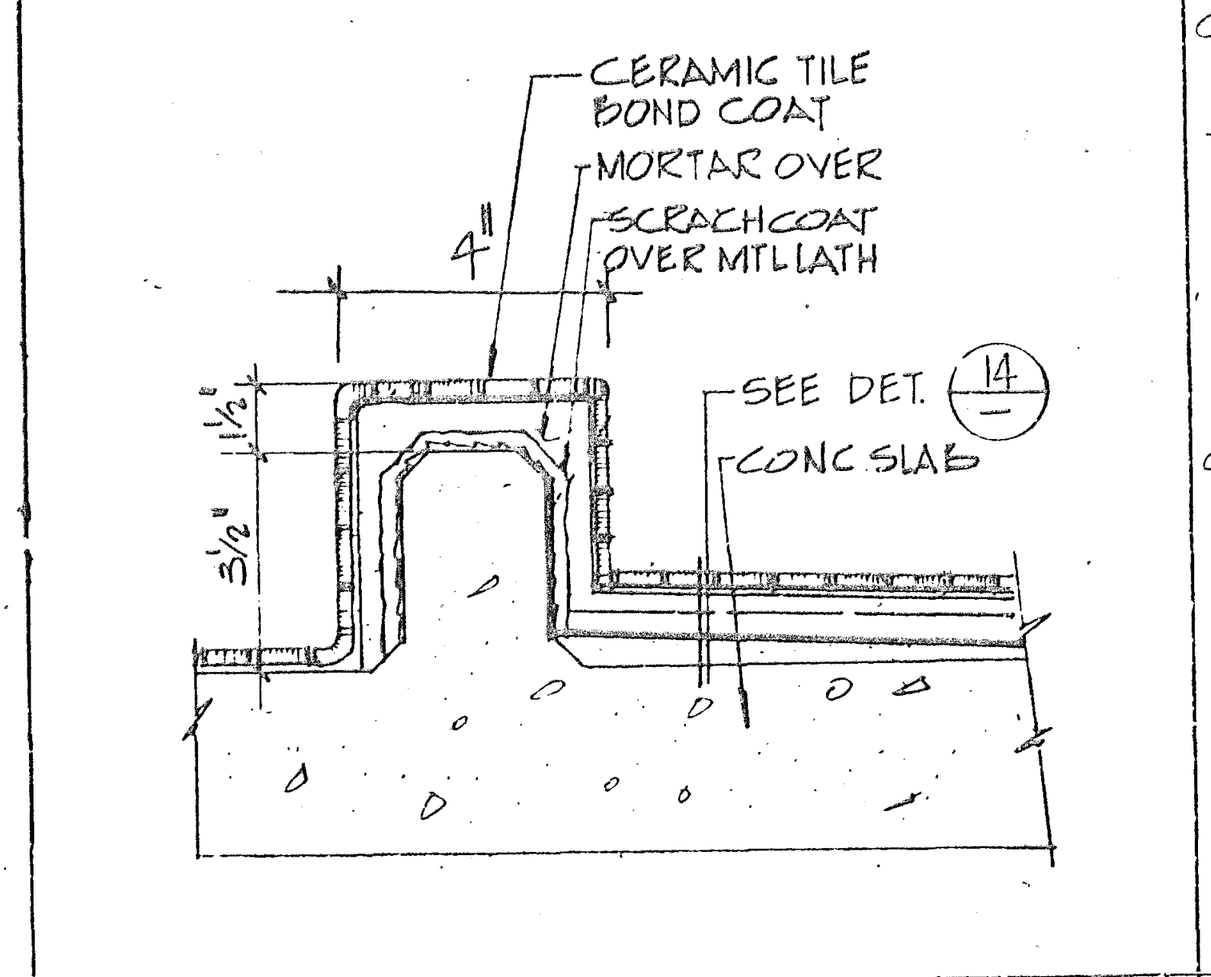
CERAMIC TILE
BOND COAT
MORTAR OVER
SCRATCHCOAT OVER MTL LATH
4"
SEE DET. 14
CONC SLAB

SHOWER CURB N.T.S. (13)

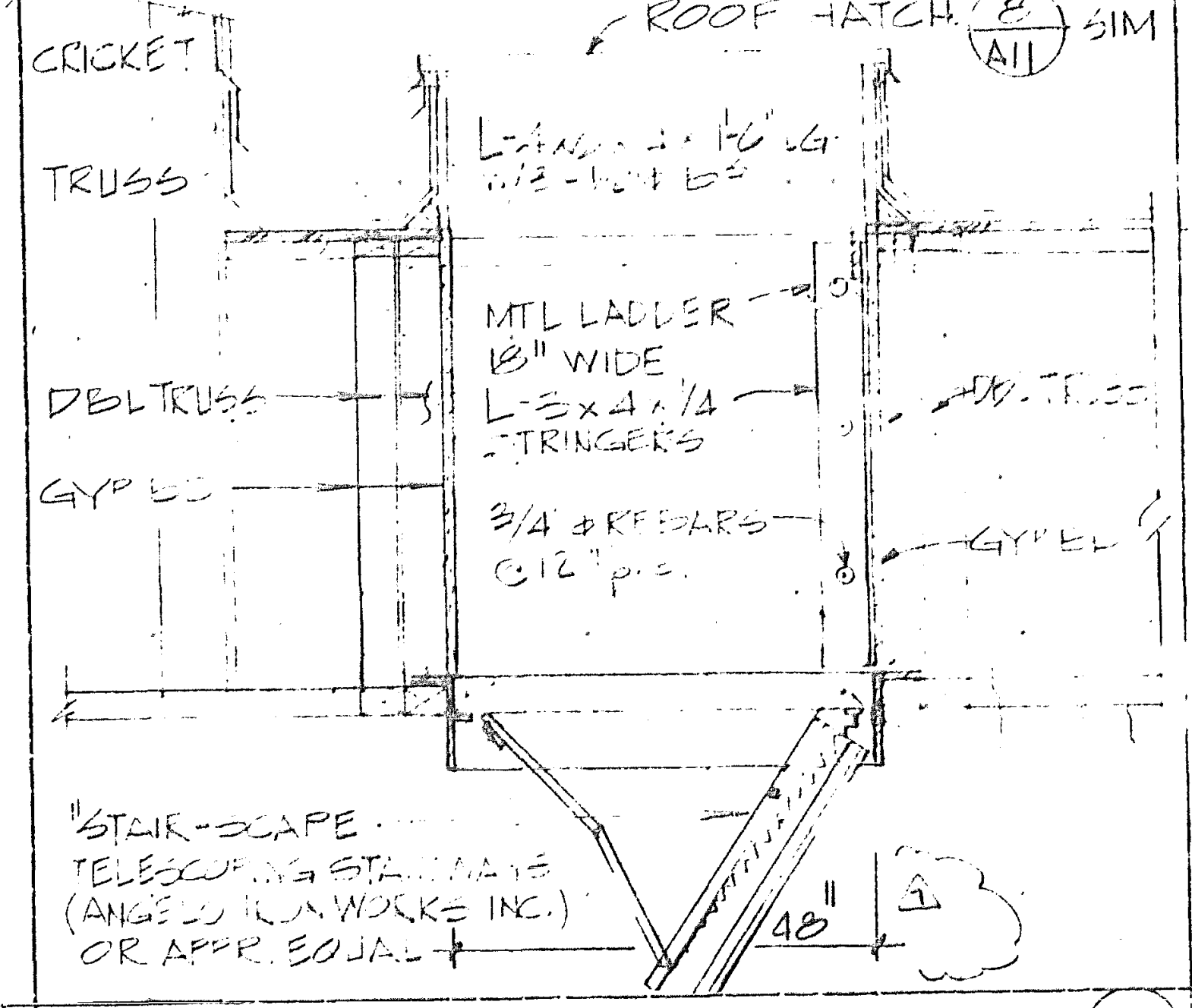
ROOF HATCH
SIM
CRICKET
TRUSS
DBL TRUSS
GYP BD
MTL LADDER 18" WIDE
L-3x4x1/4 STRINGERS
3/4 Ø REBARS @ 12" o.c.
"STAIR-SCAPE TELESCOPING STAIRWAYS (ANGELO BROS. WORKS INC.) OR APPR. EQUAL"
48"

ROOF HATCH ACCESS (12A)

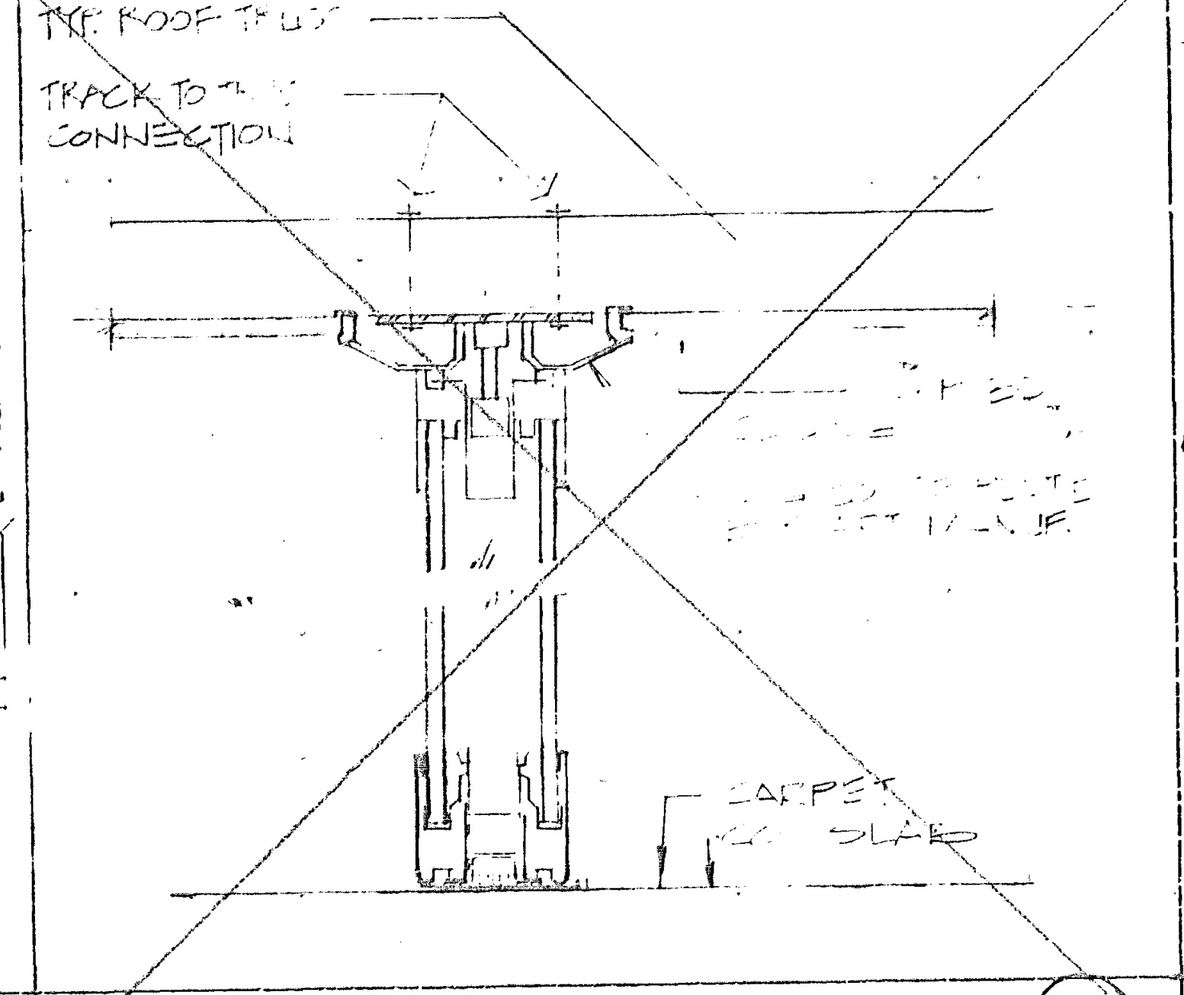
TYP ROOF TRUSS
TRACK TO CONNECTION

MOVABLE PARTITION N.T.S. (12)

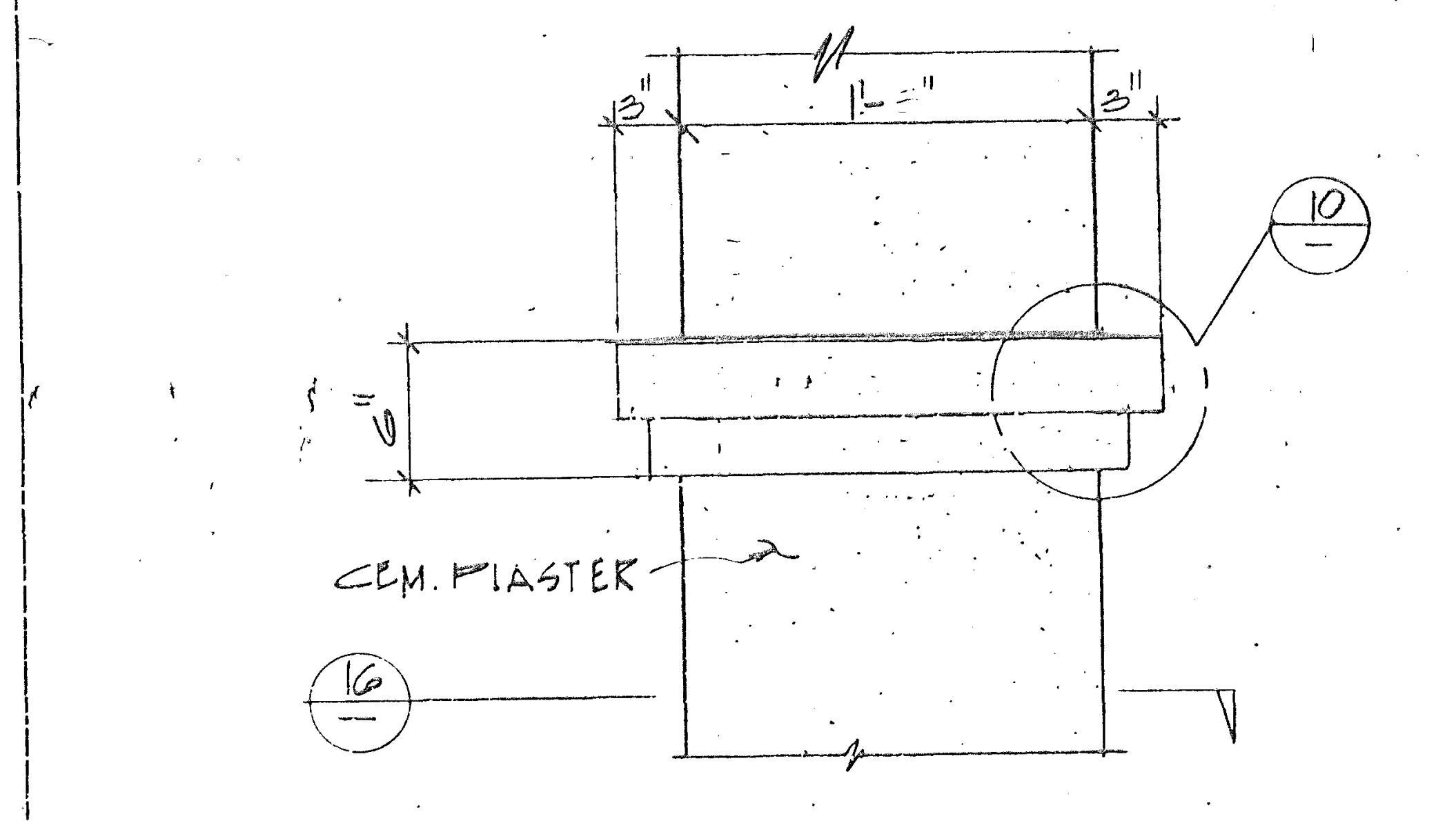
3"
1'-3"
3"
10
CEM. PLASTER
16

COLUMN CAP 1½"=1'-0" (11)

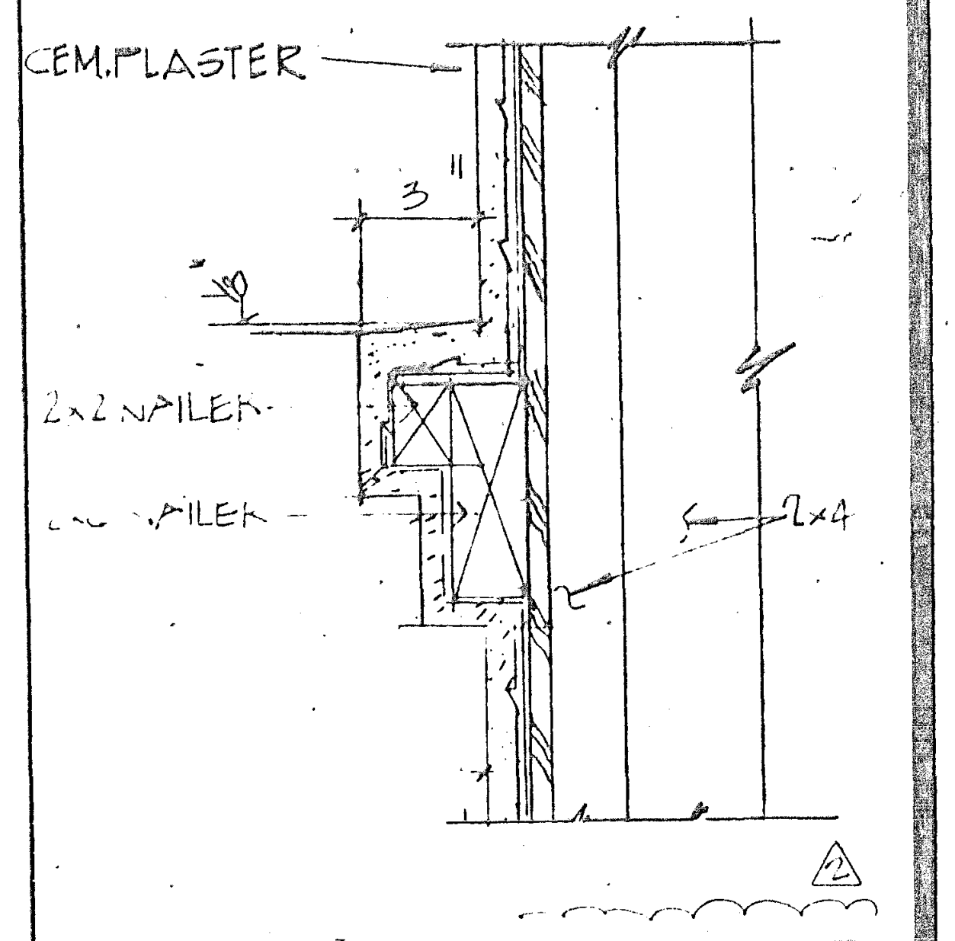
CEM. PLASTER
3"
2x2 NAILER
2x NAILER
2x4

COL. CAP DET 3"=1'-0" (10)

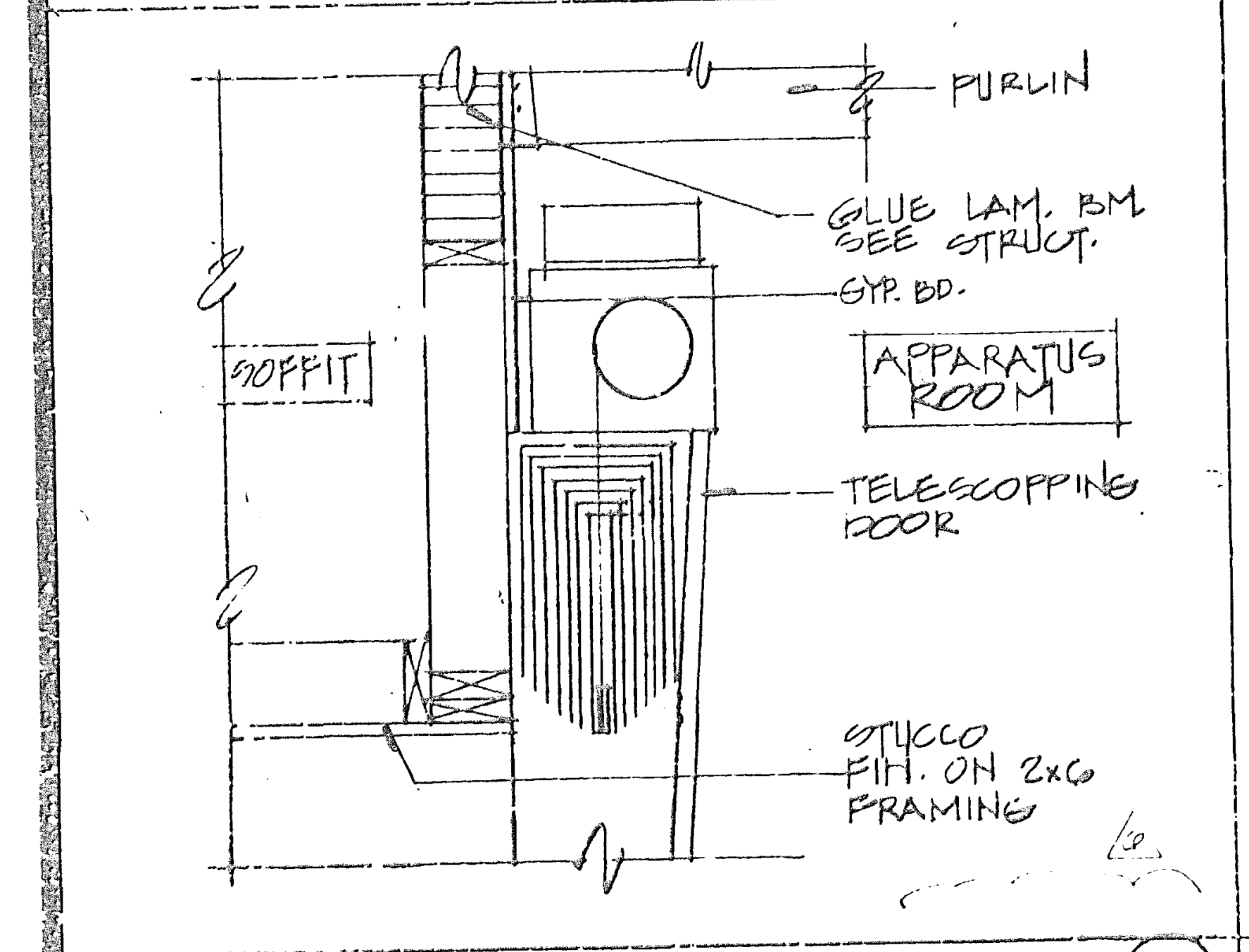
PURLIN
GLUE LAM. BM. SEE STRUCT.
GYP BD.
SOFFIT
APPARATUS ROOM
TELESCOPING DOOR
STUCCO FIN. ON 2x6 FRAMING

VEHICULAR DOOR HEAD 1"=1'-0" (20)

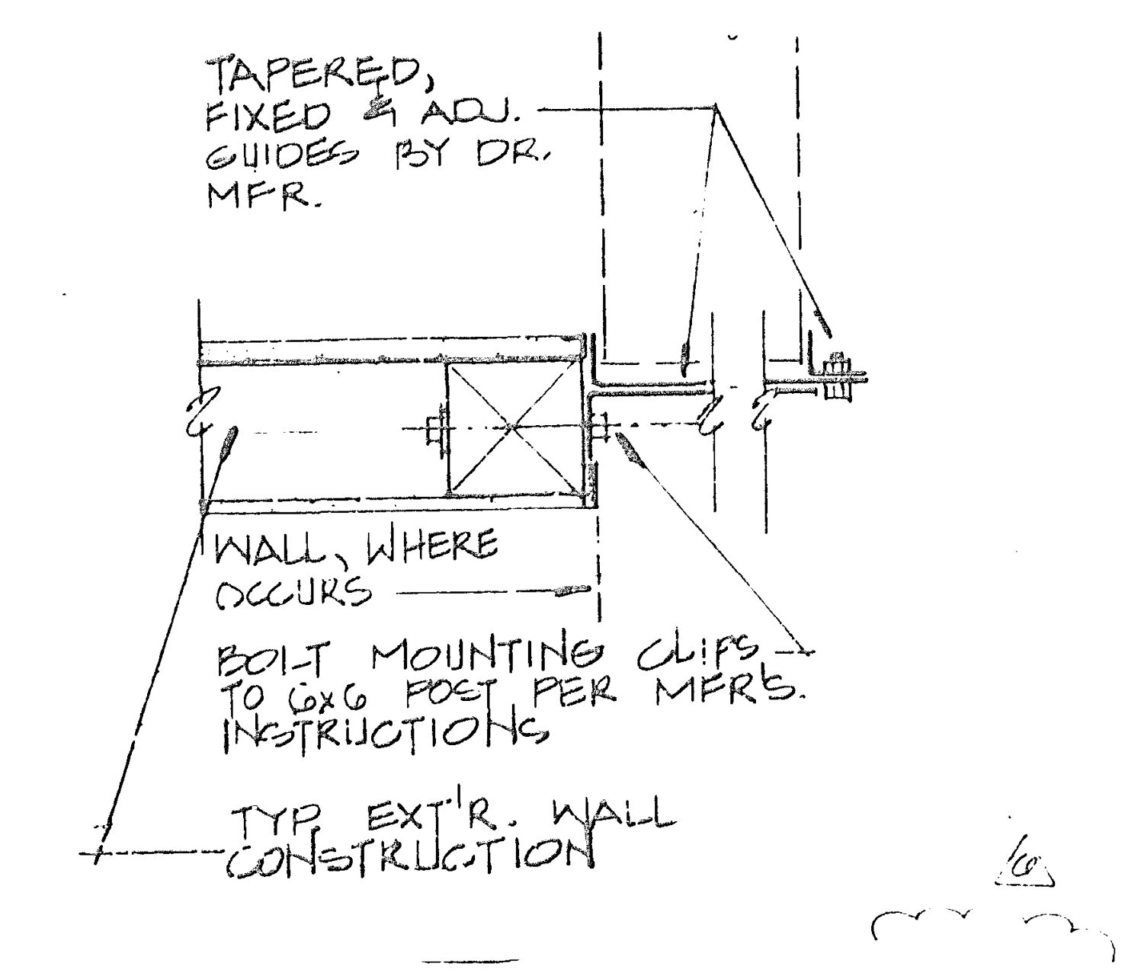
TAPERED, FIXED & ADJ. GUIDES BY DR. MFR.
WALL, WHERE OCCURS
BOLT MOUNTING CLIPS TO 6x6 POST PER MFR'S. INSTRUCTIONS
TYP EXT'R. WALL CONSTRUCTION

VEHICULAR DOOR JAMB 1½"=1'-0" (19)

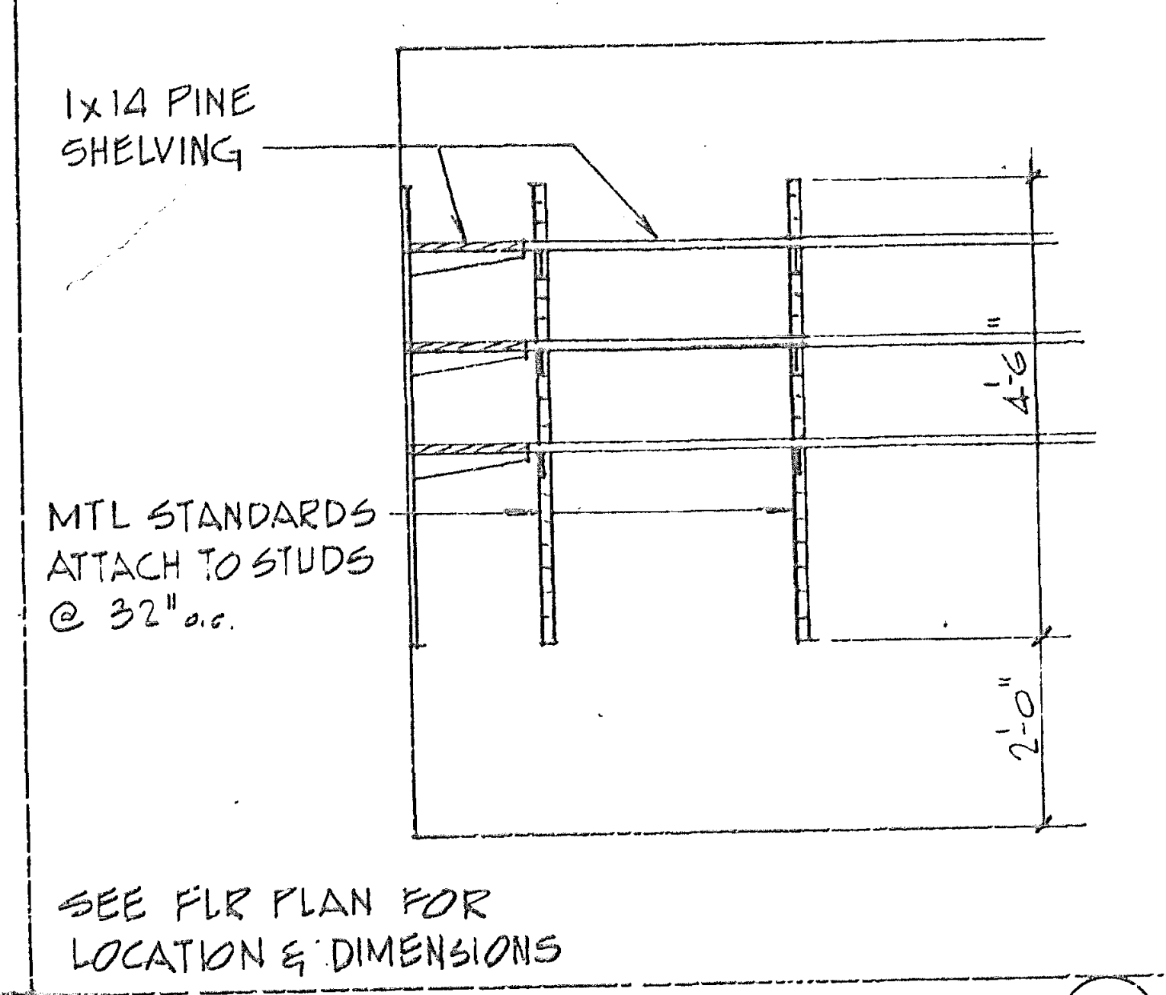
1x14 PINE SHELVING
MTL STANDARDS ATTACH TO STUDS @ 32" o.c.
1'-6"
2'-0"

SEE FLR PLAN FOR LOCATION & DIMENSIONS

STORAGE SHELVING 1½"=1'-0" (18)

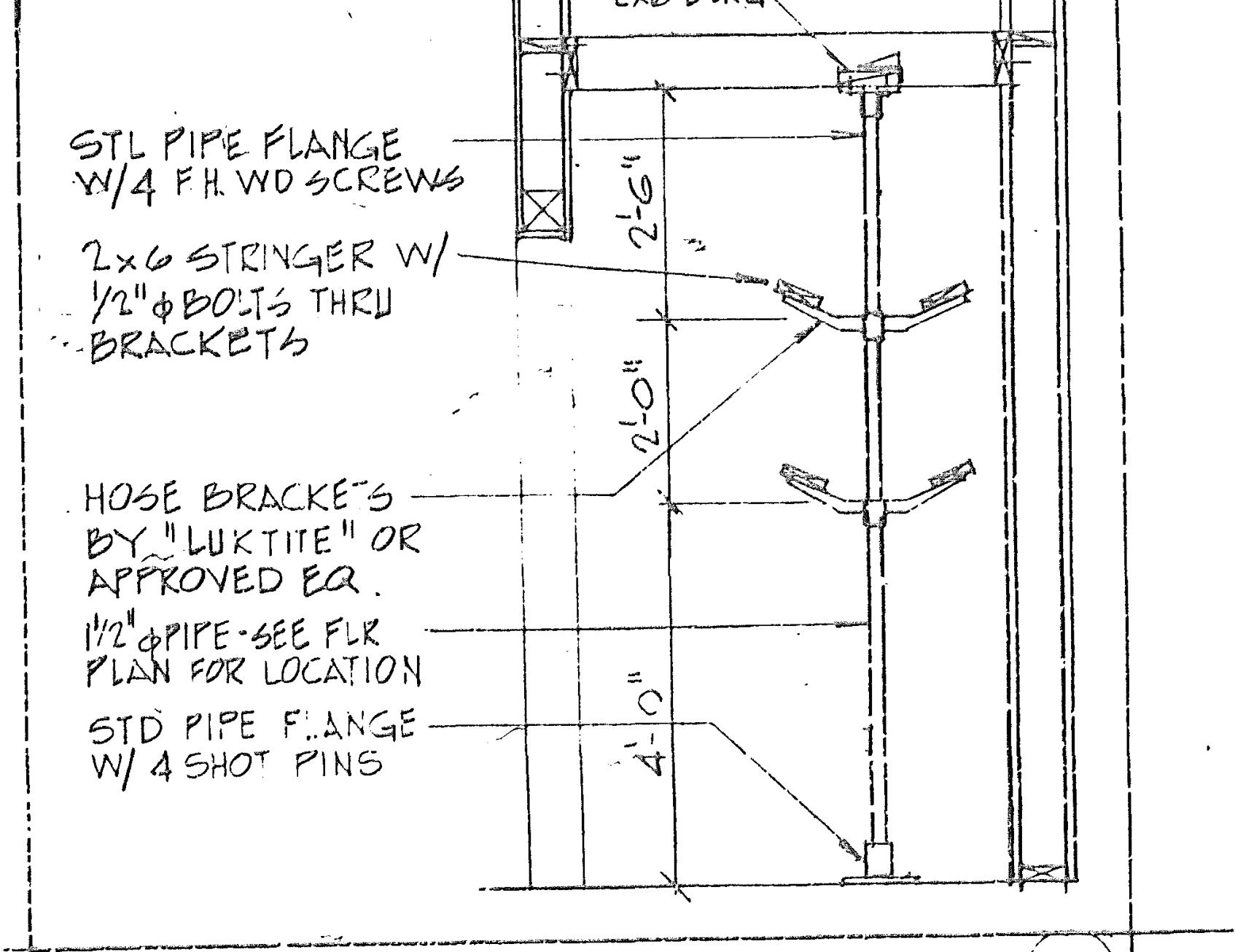
2x6 BLKG
STL PIPE FLANGE W/4 F.H. WD SCREWS
2x6 STRINGER W/ 1/2" Ø BOLTS THRU BRACKETS
HOSE BRACKETS BY "LUKTITE" OR APPROVED EQ.
1½" Ø PIPE-SEE FLR PLAN FOR LOCATION
STD PIPE FLANGE W/ 4 SHOT PINS
2'-6"
2'-0"
4'-0"

HOSE RACK ½"=1'-0" (17)

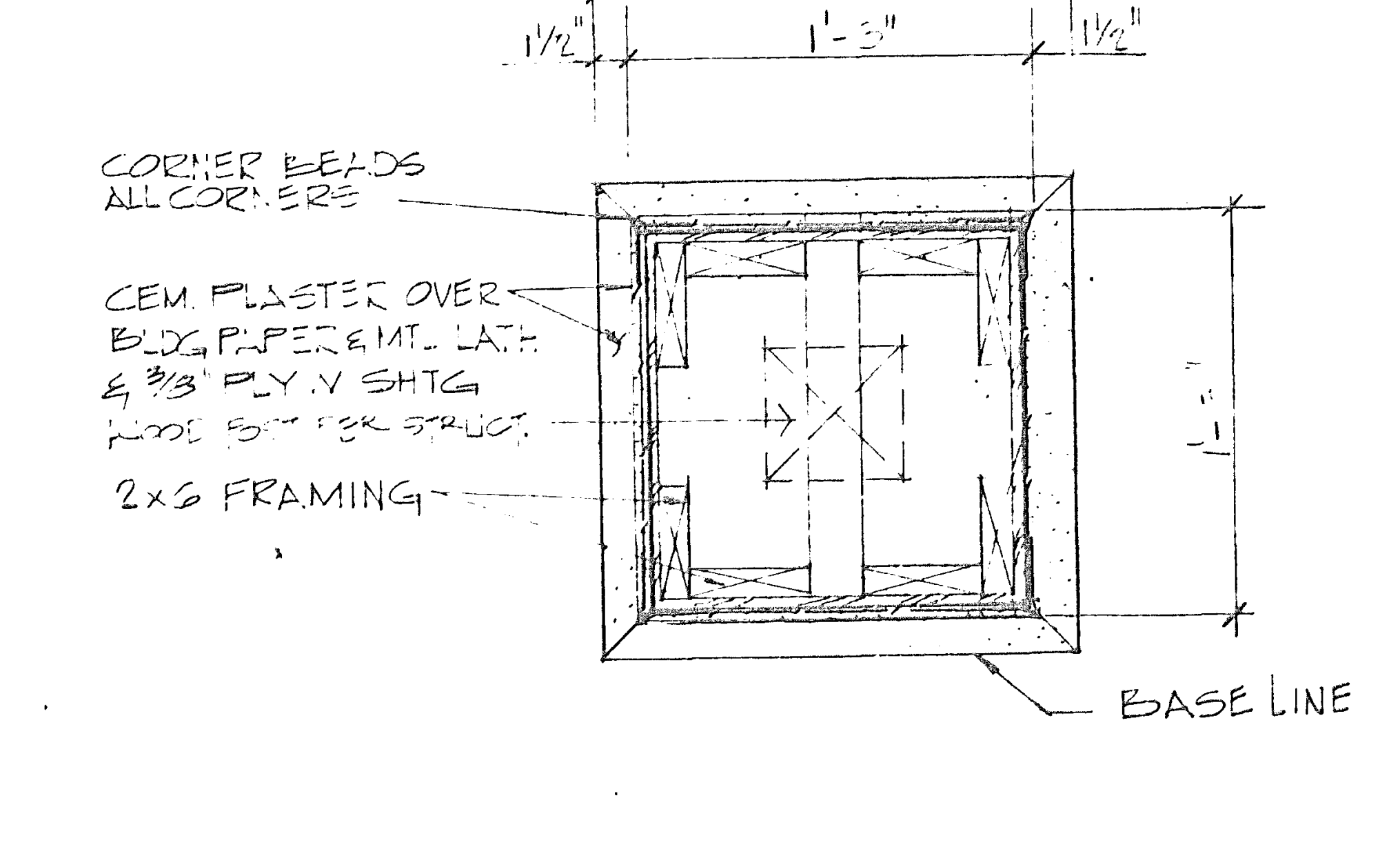
1½"
1'-3"
1½"
CORNER BEADS ALL CORNERS
CEM. PLASTER OVER BLDG PAPER & MTL LATH & 3/8" PLYWD SHTG
2x6 FRAMING
BASE LINE

WD FRAME & PLAS COL - PLAN 1½"=1'-0" (16)

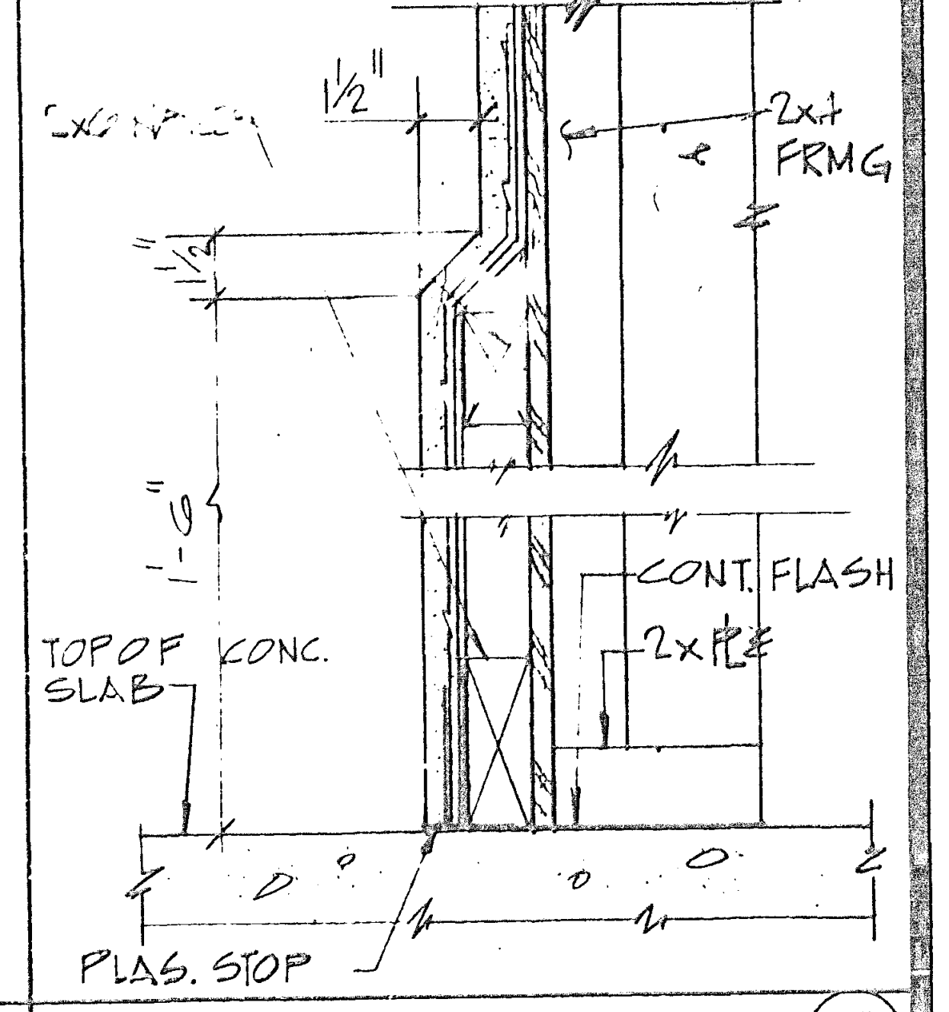
1½"
2x4 FRMG
CONT. FLASH
2x PLT
TOP OF CONC. SLAB
PLAS. STOP

BASE DET. 3"=1'-0" (15)

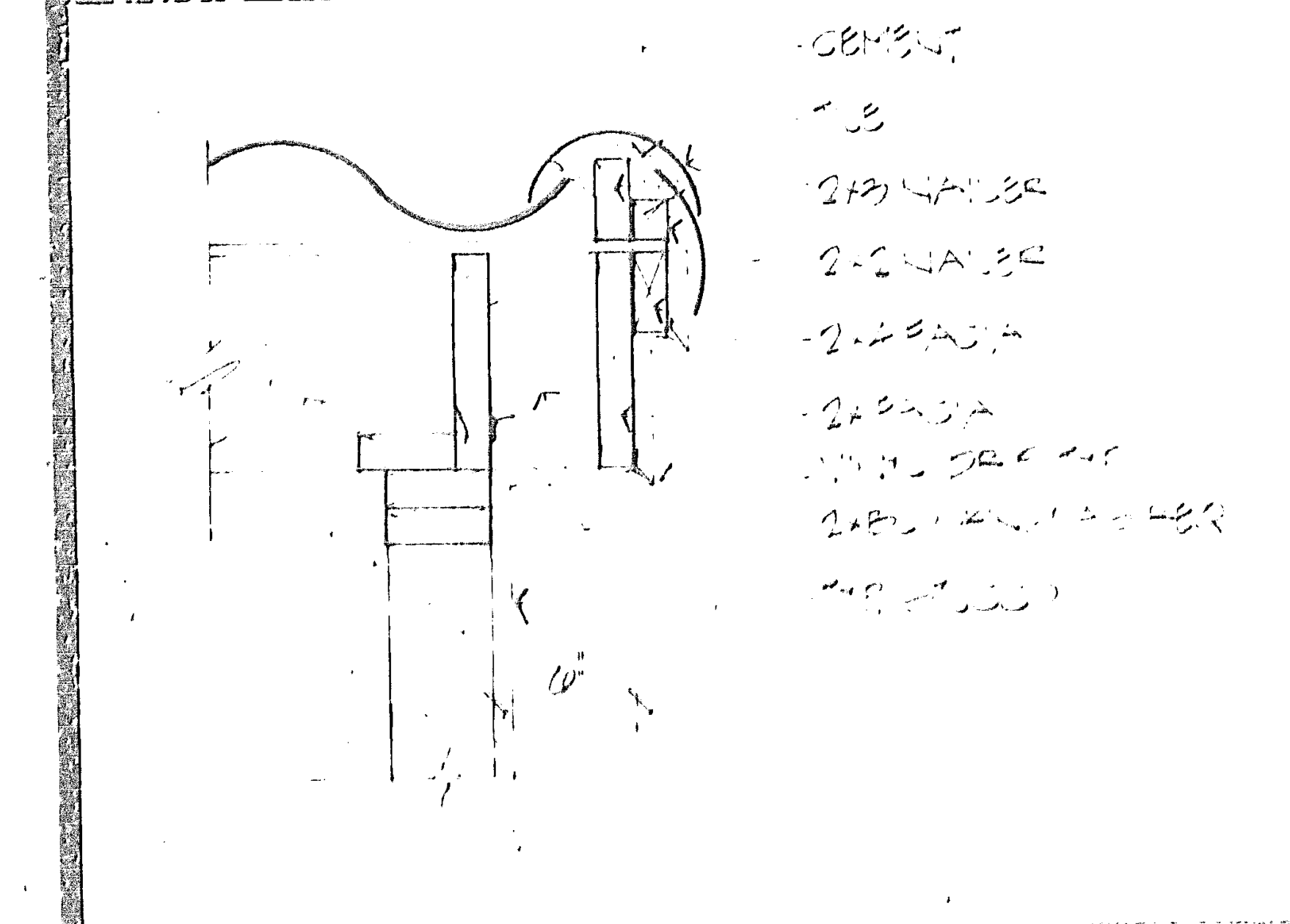
CEMENT
2x3 NAILER
2x2 NAILER
2x4 FASCIA
2x FASCIA
6"

RAKE DETAIL (26)

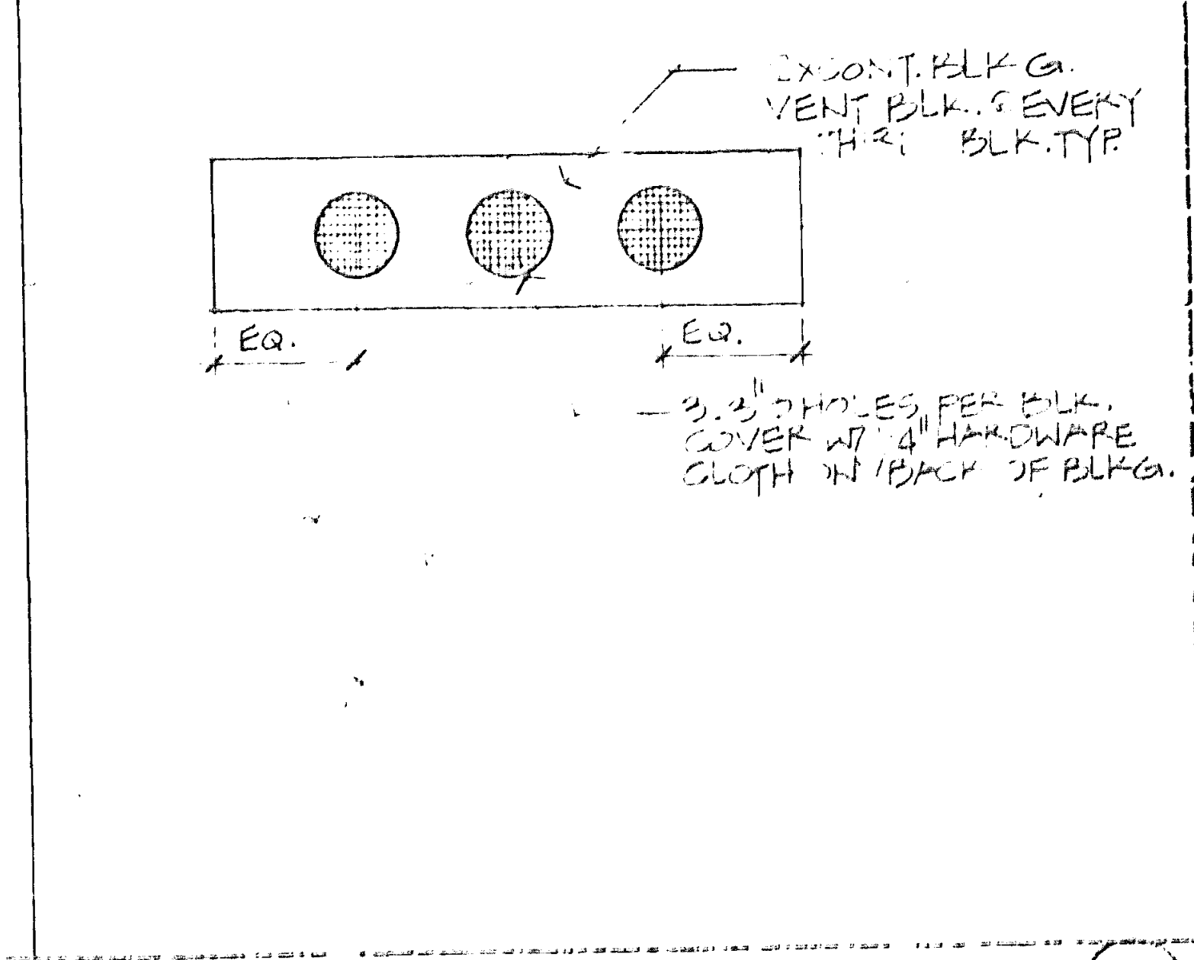
2x CONT. BLKG. VENT BLK. @ EVERY THIRD BLK. TYP.
EQ.
EQ.
3-3" Ø HOLES PER BLK. COVER W/ 1/4" HARDWARE CLOTH IN BACK OF BLKG.

VENT BLK. DETAIL (25)

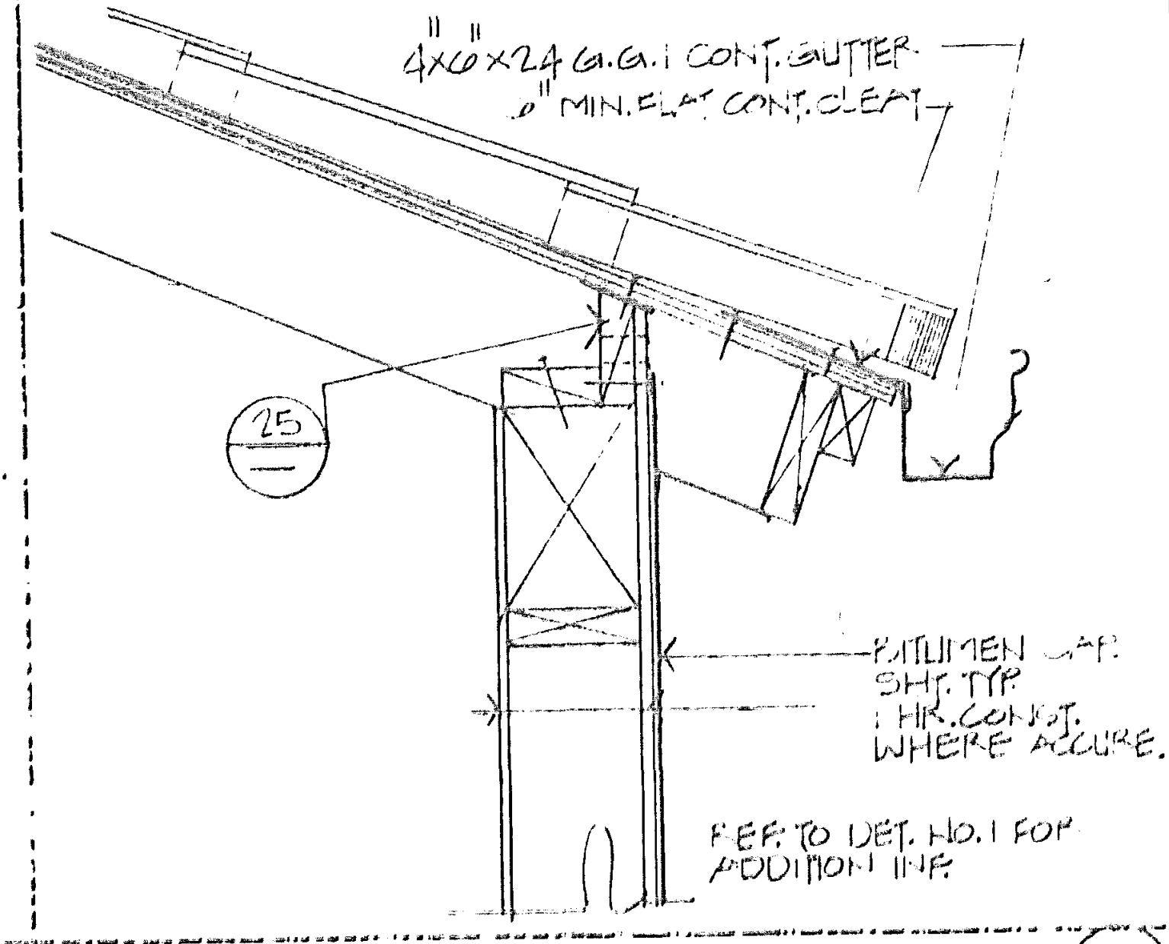
4"x6"x24 G.G.I. CONT. GUTTER
MIN. FLAT CONT. CLEAT
25
BITUMEN CAP SHT. TYP
1 HR. CONST. WHERE OCCURE.
REFER TO DET. NO. 1 FOR ADDITION INF.

GUTTER & VENT DET. (24)

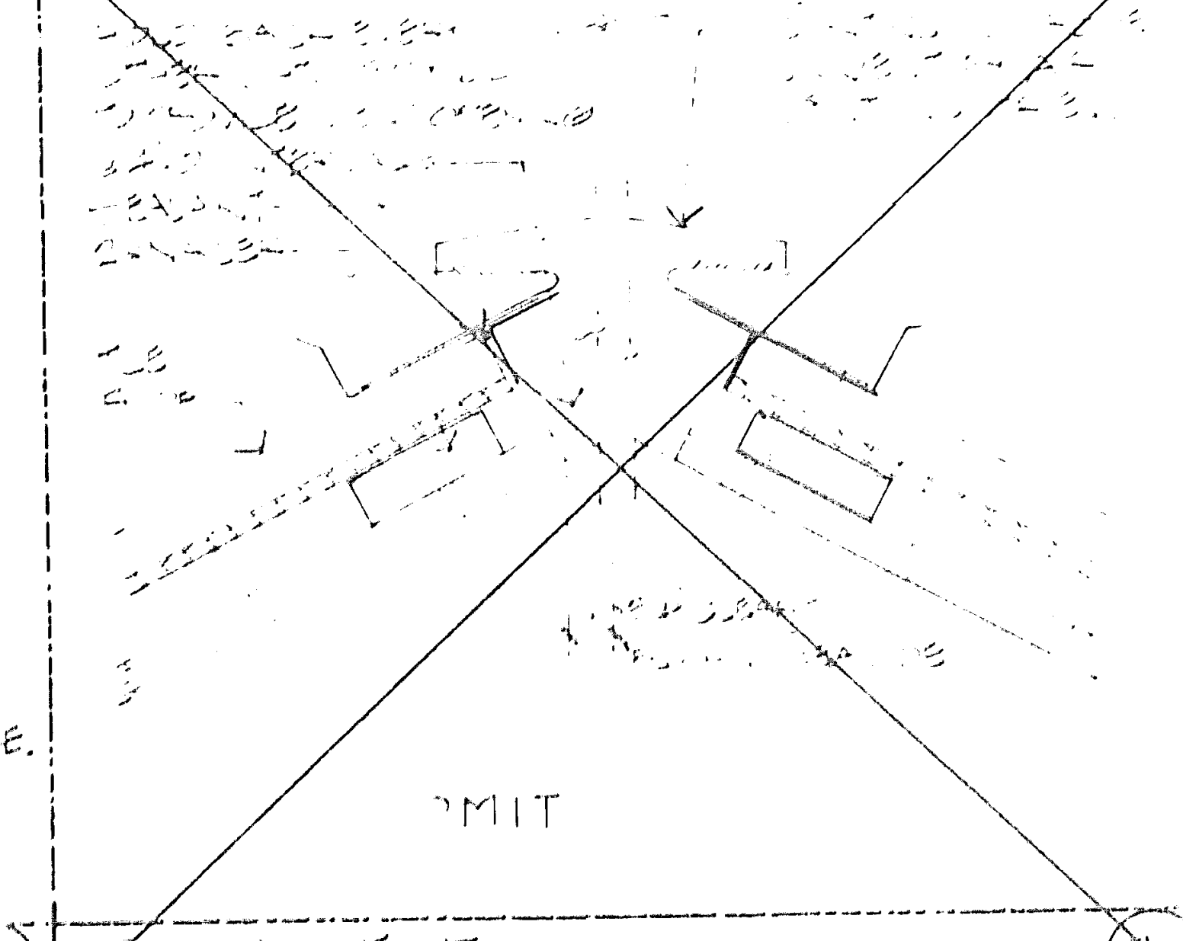

ROOF VENT (23)

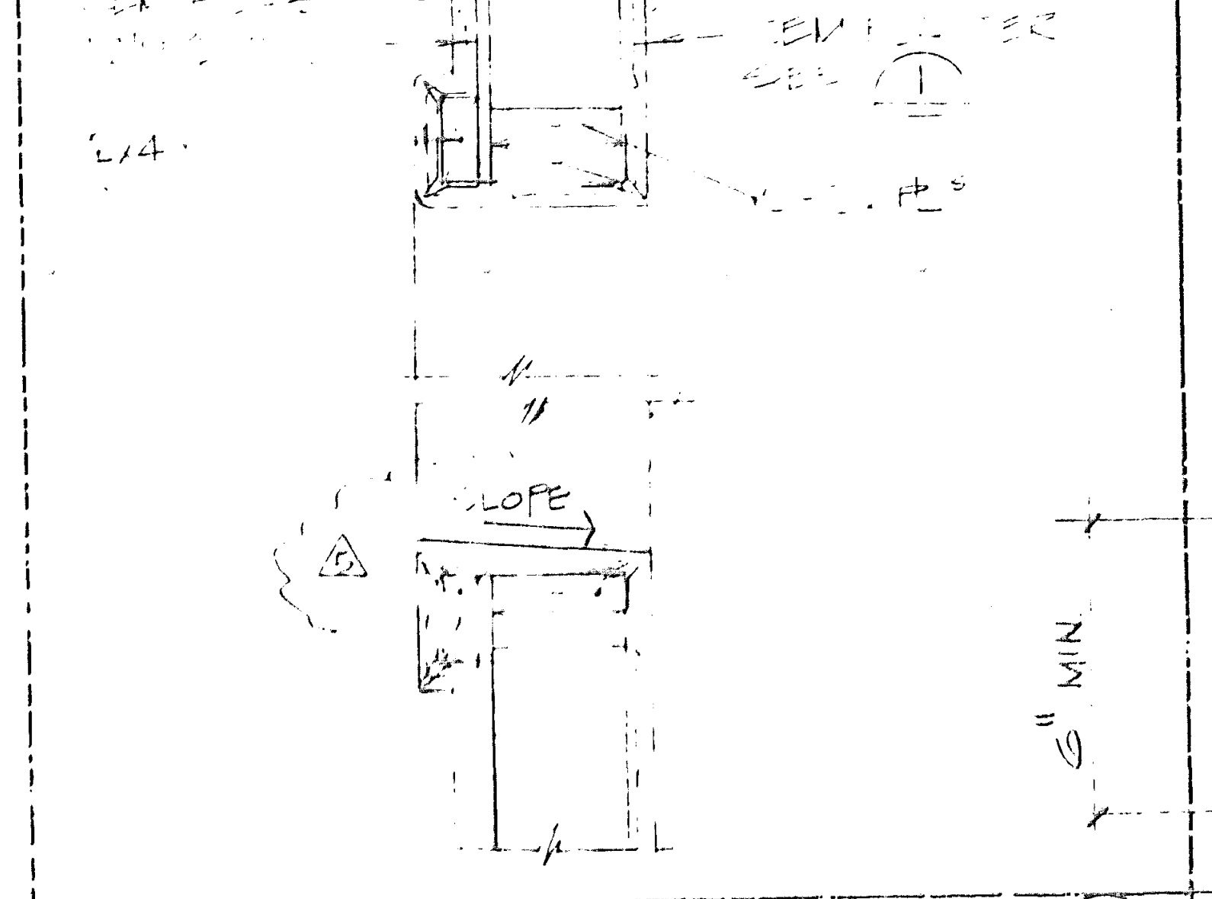

TOWER WINDOW 1½"=1'-0" (22)

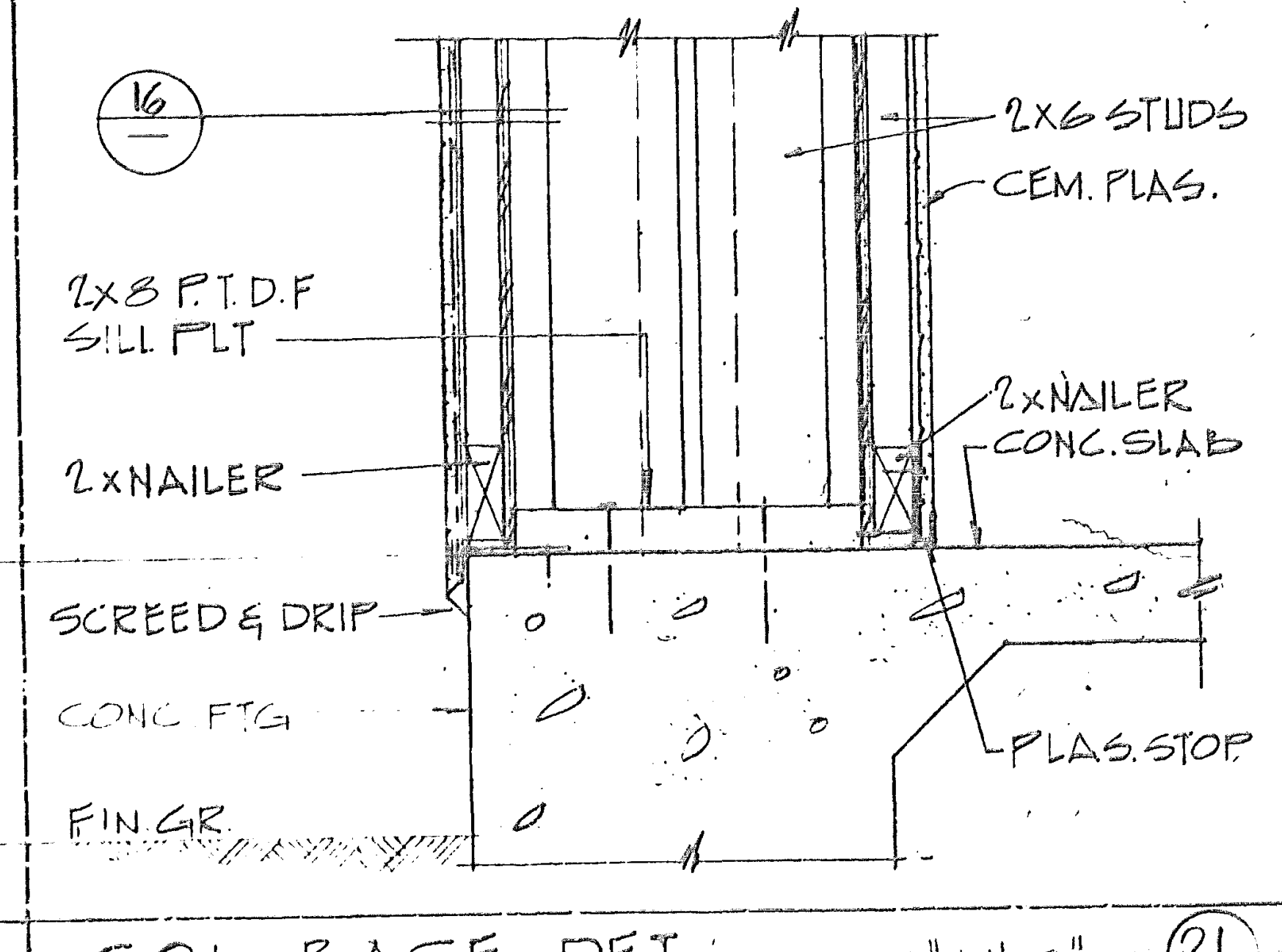
16
2x6 STUDS
CEM. PLAS.
2x8 P.T.D.F SILL PLT
2x NAILER
2x NAILER
CONC. SLAB
SCREED & DRIP
CONC FTG
FIN GR
PLAS. STOP

COL. BASE DET. 3"=1'-0" (21)

McCULLOCH ARCHITECTS

2600 Newport Center Drive
Suite 380
Newport Beach
California 92660
714 - 759 - 9141

THESE DRAWINGS REPRESENT AS-BUILT CONDITIONS TO THE BEST OF OUR KNOWLEDGE BASED UPON VISUAL INSPECTION OF THE BUILDING DURING OCTOBER 1989.

WILLIAM C. McCULLOCH
ARCHITECT

SANTA MARGARITA FIRE STATION #45
30131 AVENTURA AVENUE
RANCHO SANTA MARGARITA
SANTA MARGARITA, CA

Project No.
Designer
Drawn by
Date 11-1-89 AS-BUILT
Scale

Revisions	By	Date
1 BLDG DEPT.	J.B.	1-23-90
2 OWNER/ARCH.	A.F.	1/2/90
5 G.S.A. / A.R.	A.F.	11/12/90
6 G.S.A.	A.F.	11/26/90
G.S.A.		12/12/90

Sheet
A-10

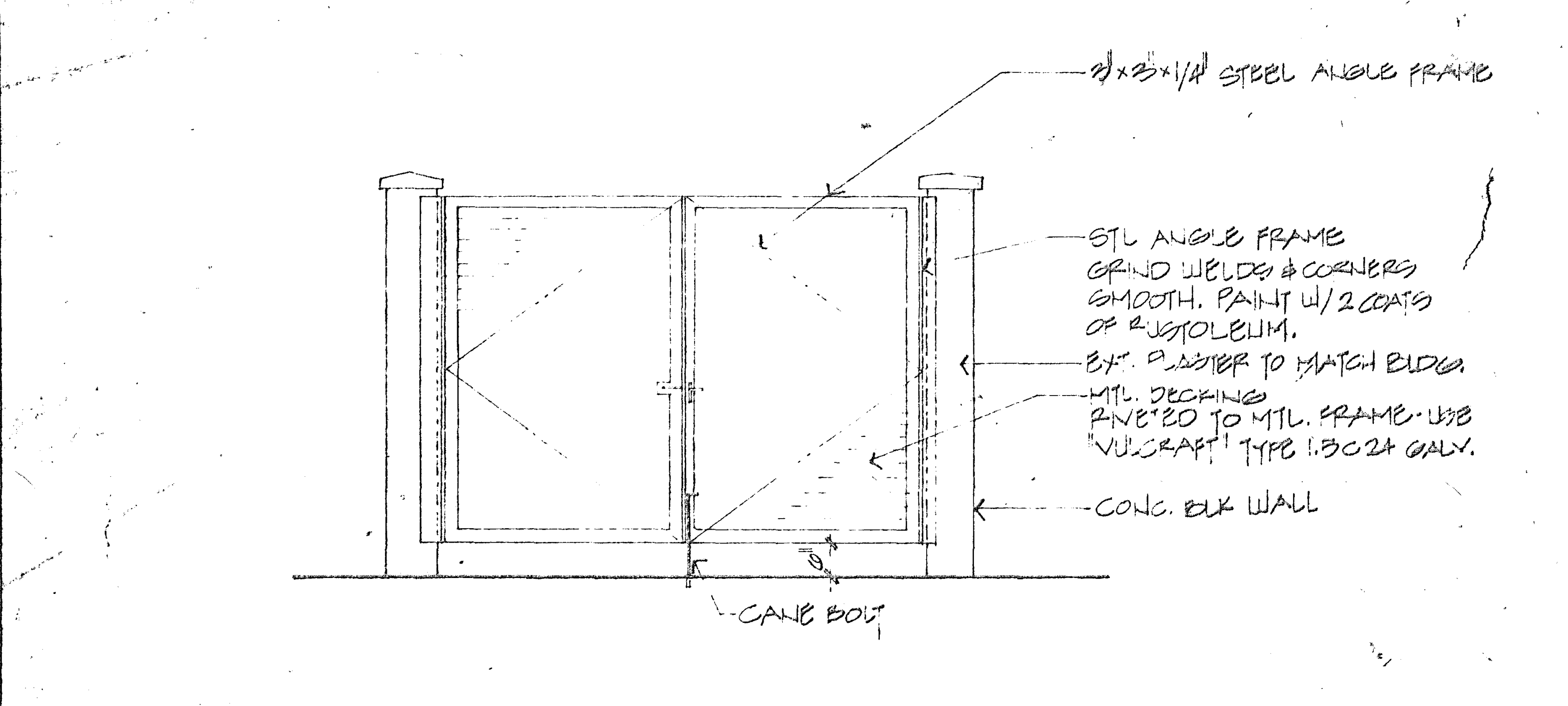
3"x3"x1/4" STEEL ANGLE FRAME
STL ANGLE FRAME GRIND WELDS & CORNERS SMOOTH. PAINT W/ 2 COATS OF RUSTOLEUM.
EXT. PLASTER TO MATCH BLDG.
MTL. DECKING RIVETED TO MTL. FRAME. USE "VULCRAFT" TYPE 1.5C24 GALV.
CONC. BLK WALL
CANE BOLT

ELEVATION OF TRASH ENCLOSURE ⑮

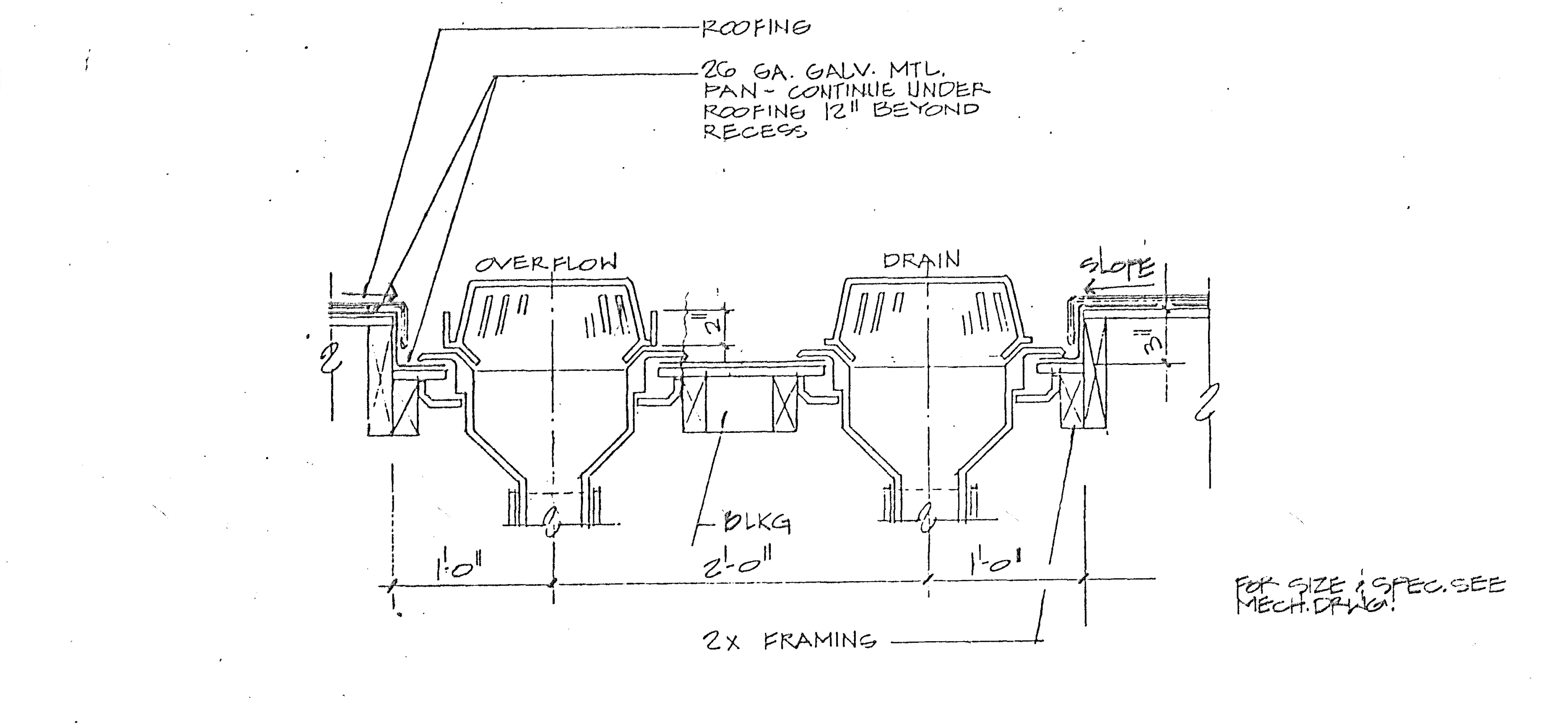
ROOFING
26 GA. GALV. MTL. PAN - CONTINUE UNDER ROOFING 12" BEYOND RECESS
OVERFLOW
DRAIN
SLOPE
2"
3"
BLKG
1'-0"
2'-0"
1'-0"
2x FRAMING
FOR SIZE & SPEC. SEE MECH. DRWG.

ROOF DRAIN WITH OVERFLOW ⑥

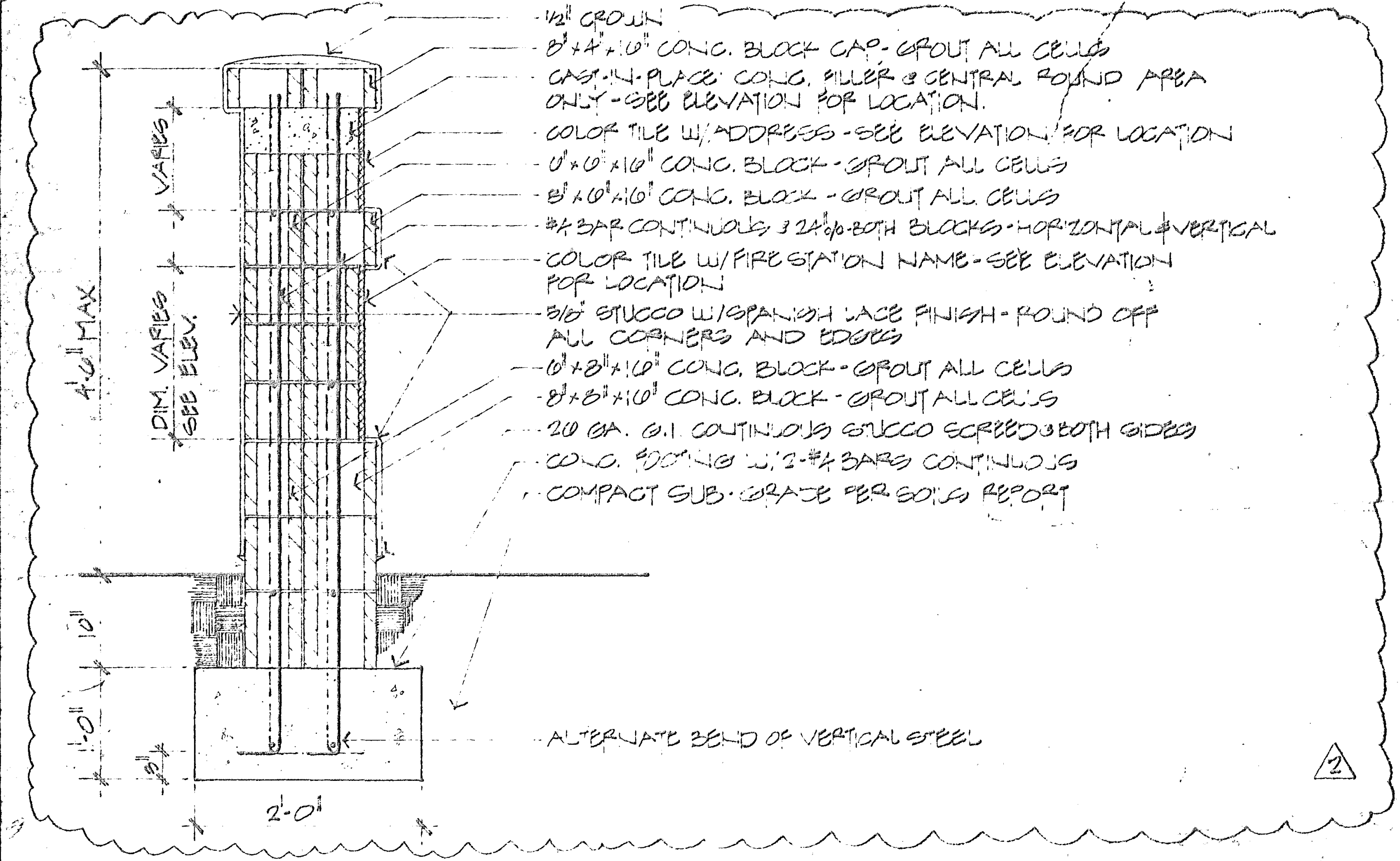
1/2" CROWN
8"x4"x16" CONC. BLOCK CAP - GROUT ALL CELLS
CAST-IN-PLACE CONC. FILLER @ CENTRAL ROUND AREA ONLY - SEE ELEVATION FOR LOCATION.
COLOR TILE W/ ADDRESS - SEE ELEVATION FOR LOCATION
6"x6"x16" CONC. BLOCK - GROUT ALL CELLS
8"x6"x16" CONC. BLOCK - GROUT ALL CELLS
#4 BAR CONTINUOUS @ 24" o/c BOTH BLOCKS - HORIZONTAL & VERTICAL
COLOR TILE W/ FIRE STATION NAME - SEE ELEVATION FOR LOCATION
5/8" STUCCO W/ SPANISH LACE FINISH - ROUND OFF ALL CORNERS AND EDGES
6"x8"x16" CONC. BLOCK - GROUT ALL CELLS
8"x8"x16" CONC. BLOCK - GROUT ALL CELLS
20 GA. G.I. CONTINUOUS STUCCO SCREED @ BOTH SIDES
CONC. FOOTING W/ 2-#4 BARS CONTINUOUS
COMPACT SUB-GRADE PER SOILS REPORT
ALTERNATE BEND OF VERTICAL STEEL
4'-6" MAX.
VARIES
DIM. VARIES SEE ELEV.
10"
1'-0"
3"
2'-0"
2

SIGN WALL SECTION SCALE = 1" = 1'-0" ⑯

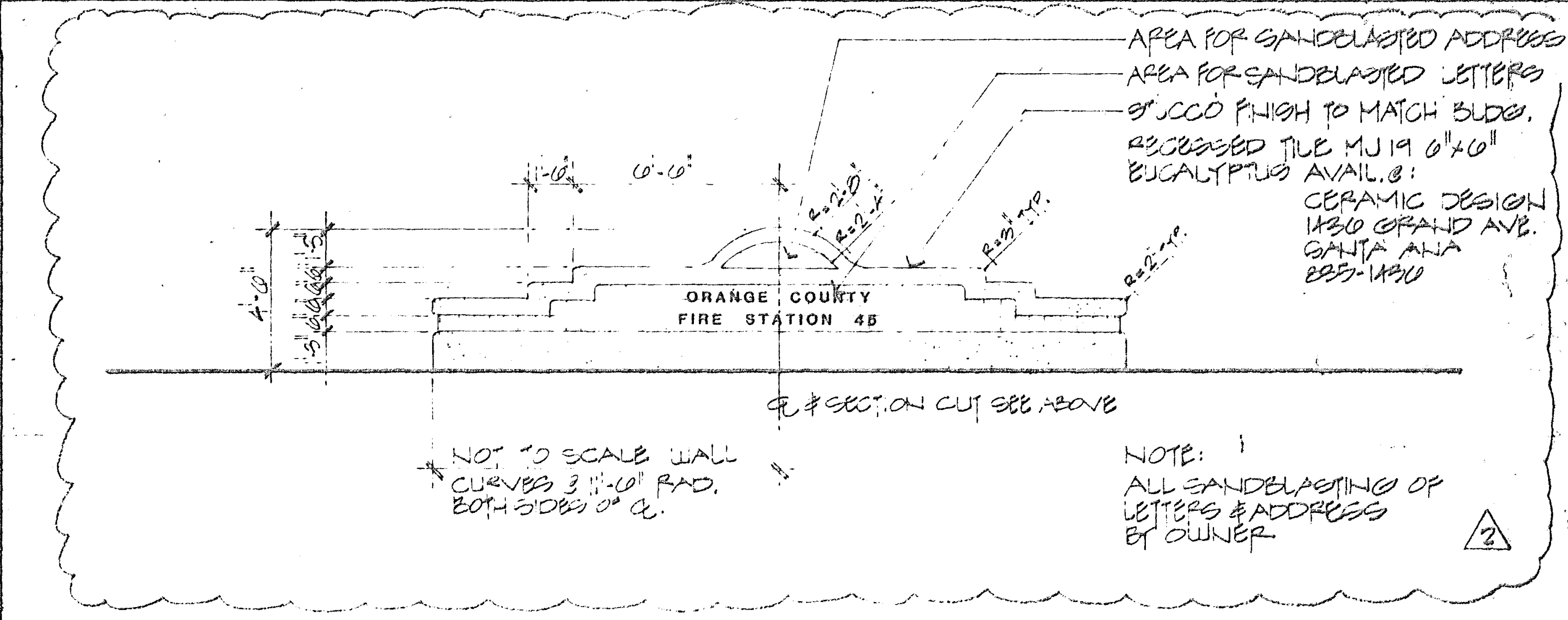
AREA FOR SANDBLASTED ADDRESS
AREA FOR SANDBLASTED LETTERS
STUCCO FINISH TO MATCH BLDG.
RECESSED TILE MJ19 6"x6" EUCALYPTUS AVAIL. @: CERAMIC DESIGN 1430 GRAND AVE. SANTA ANA 835-1430
1'-6"
6'-6"
R=2'-0"
R=2'-4"
R=3" TYP.
R=2" TYP.
4'-6"
ORANGE COUNTY
FIRE STATION 45
℄ & SECTION CUT SEE ABOVE
NOT TO SCALE WALL CURVES @ 11'-6" RAD. BOTH SIDES OF ℄.
NOTE: ALL SANDBLASTING OF LETTERS & ADDRESS BY OWNER
2

SIGN WALL ELEVATION SCALE: 1/4" = 1'-0" ⑰

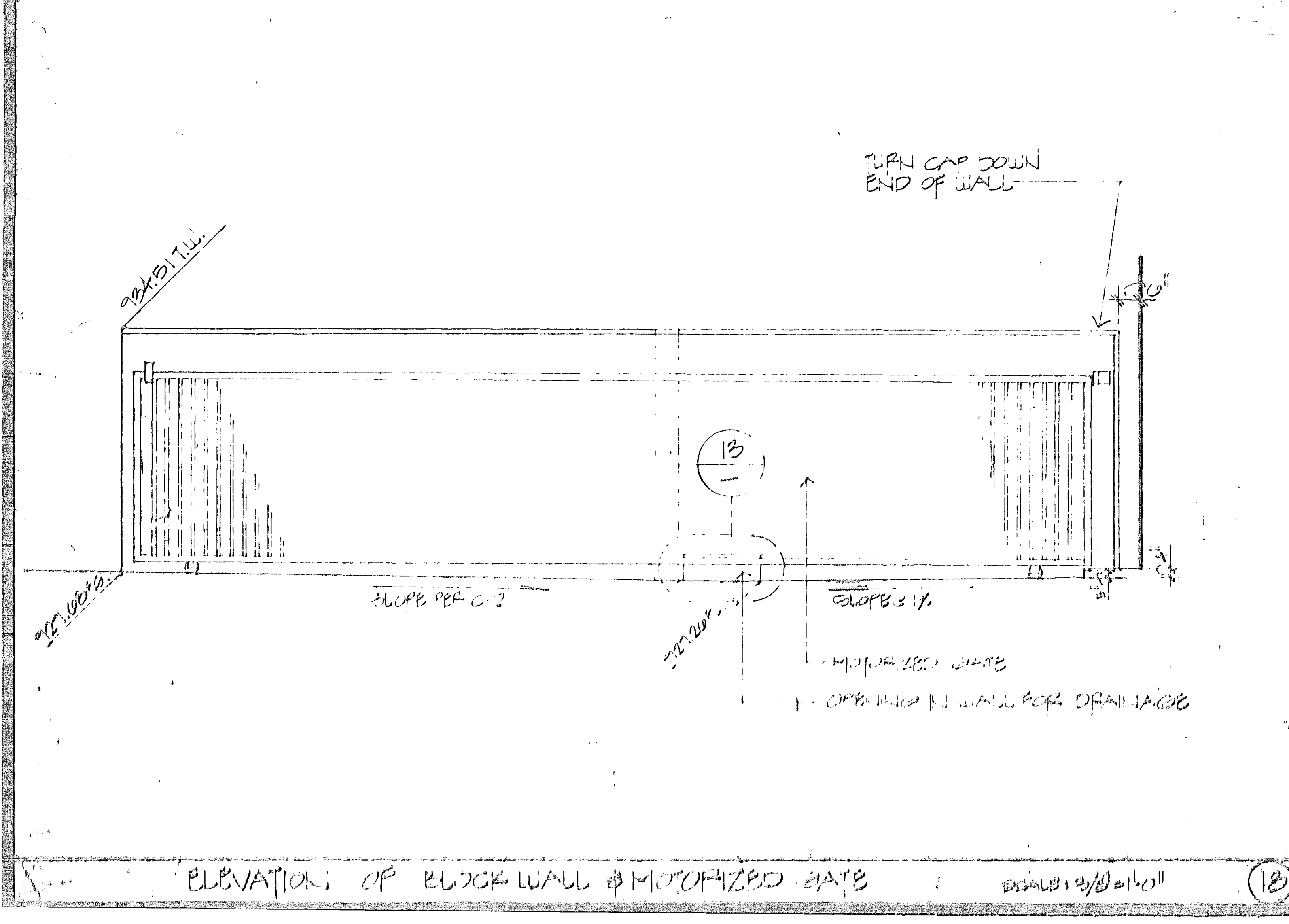
TURN CAP DOWN END OF WALL
934.51 T.W.
927.00 F.S.
927.20
6"
13
SLOPE PER C-2
SLOPE @ 1%
MOTORIZED GATE
OPENING IN WALL FOR DRAINAGE

ELEVATION OF BLOCK WALL & MOTORIZED GATE SCALE: 3/8" = 1'-0" ⑱

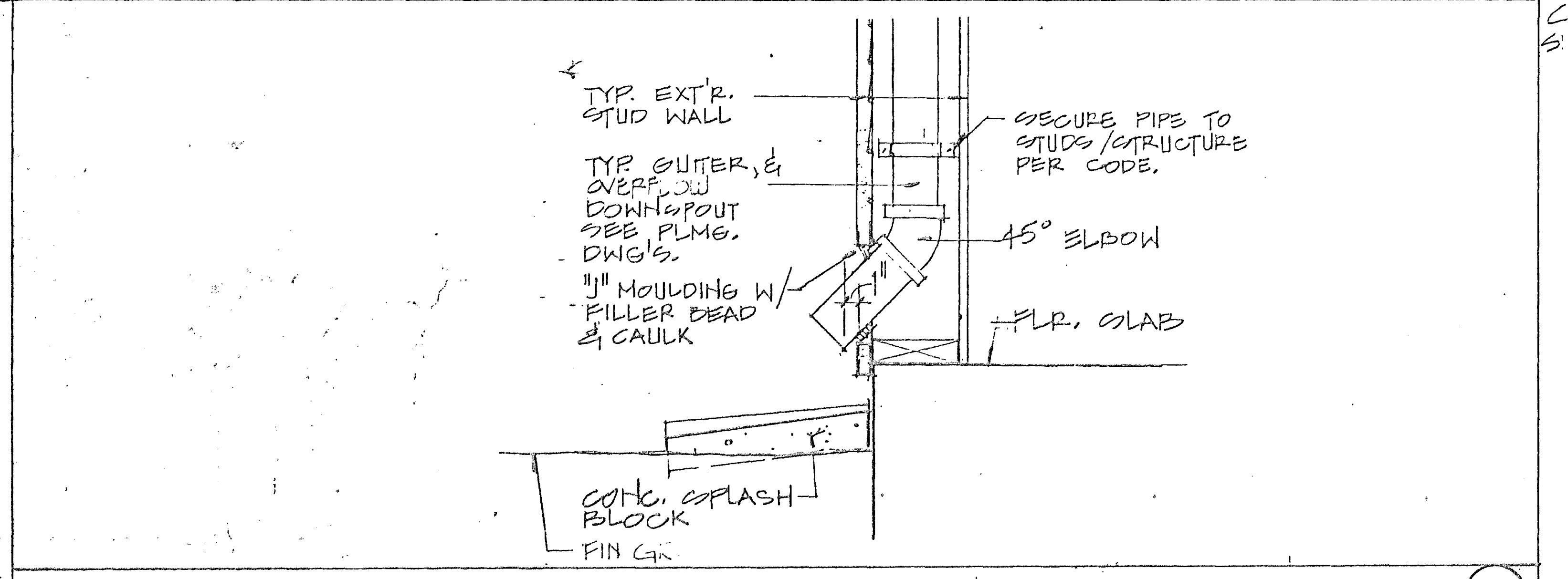
TYP. EXT'R. STUD WALL
TYP. GUTTER, & OVERFLOW DOWNSPOUT SEE PLMG. DWG'S.
"J" MOULDING W/ FILLER BEAD & CAULK
SECURE PIPE TO STUDS/STRUCTURE PER CODE.
45° ELBOW
FLR. SLAB
CONC. SPLASH BLOCK
FIN GR.

DOWNSPOUT AT SPLASH BLK. FOR GUTTER & OVERFLOW ⑦

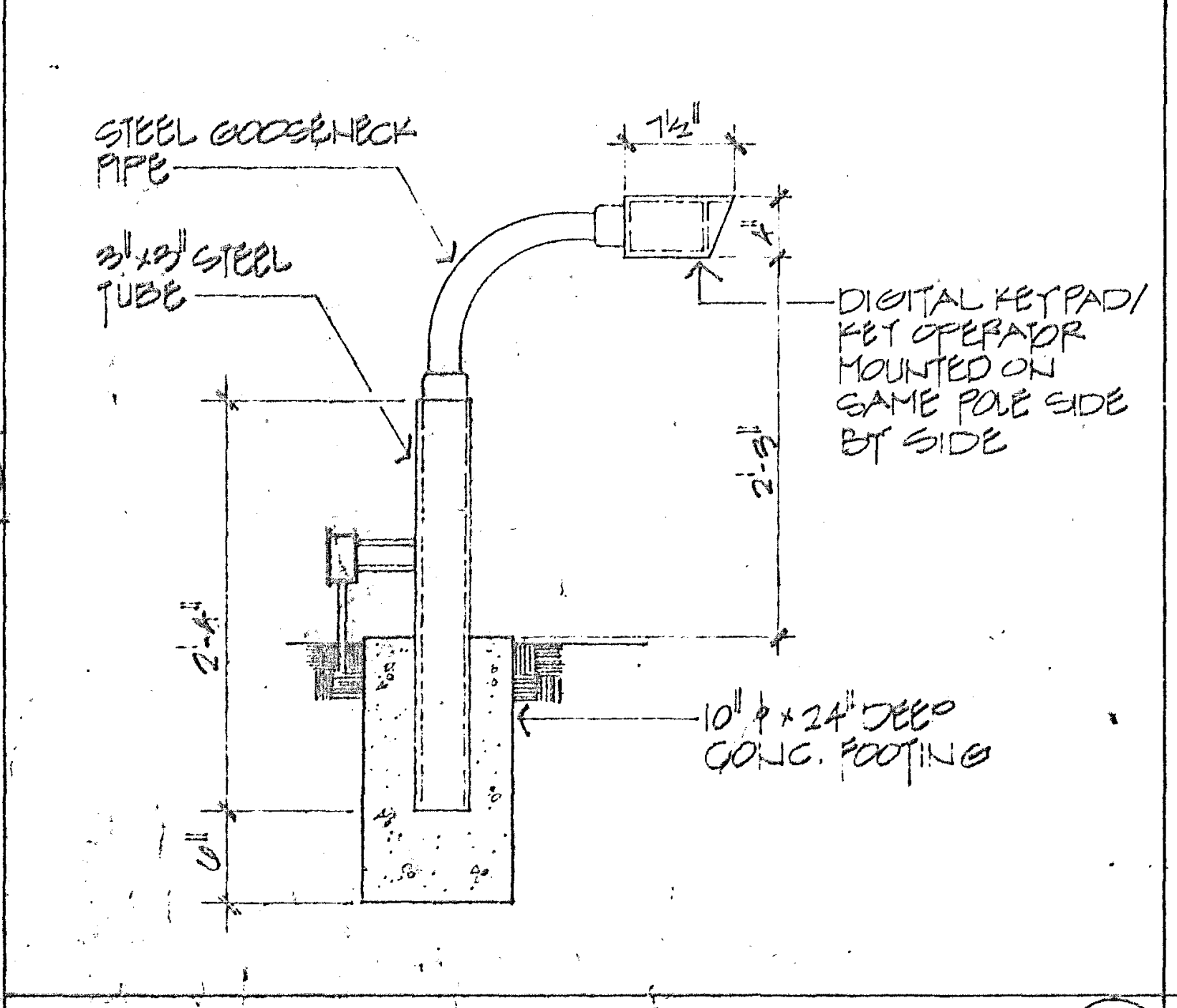
STEEL GOOSENECK PIPE
3"x3" STEEL TUBE
1 1/2"
DIGITAL KEYPAD/ KEY OPERATOR MOUNTED ON SAME POLE SIDE BY SIDE
2'-8"
2'-4"
10" ϕ x 24" DEEP CONC. FOOTING
6"

POLE MOUNTED KEYPAD/KEY OPERATOR ⑪

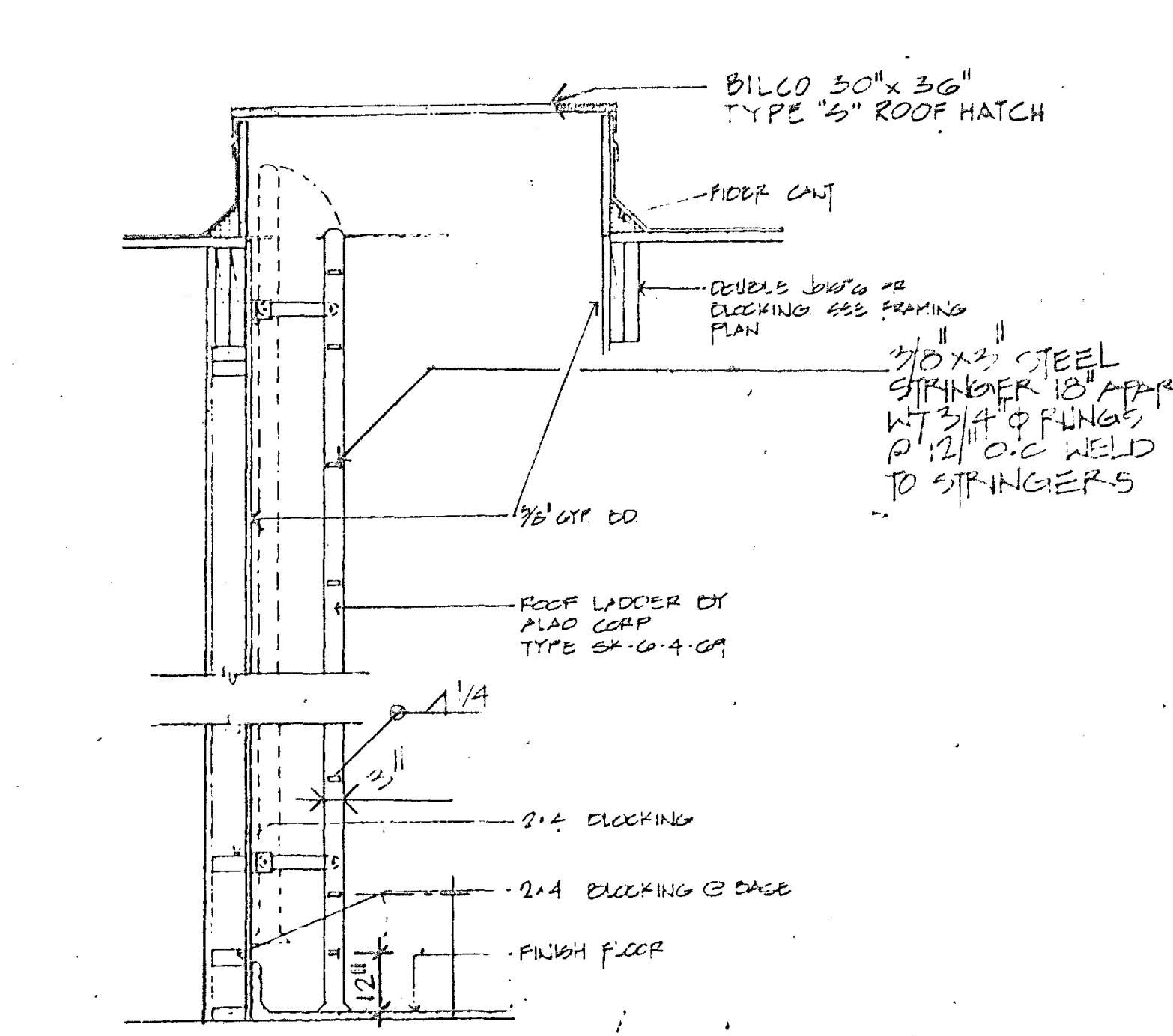
BILCO 30"x 36" TYPE "S" ROOF HATCH
FIBER CANT
DOUBLE JOISTS OR BLOCKING SEE FRAMING PLAN
3/8"x 2" STEEL STRINGER 18" APART W/ 3/4" ϕ RUNGS @ 12" O.C. WELD TO STRINGERS
5/8" GYP. BD.
ROOF LADDER BY ALACO CORP TYPE SK-6-4-69
1/4
3"
2x4 BLOCKING
2x4 BLOCKING @ BASE
FINISH FLOOR
12"

LADDER TO ROOF HATCH ⑧

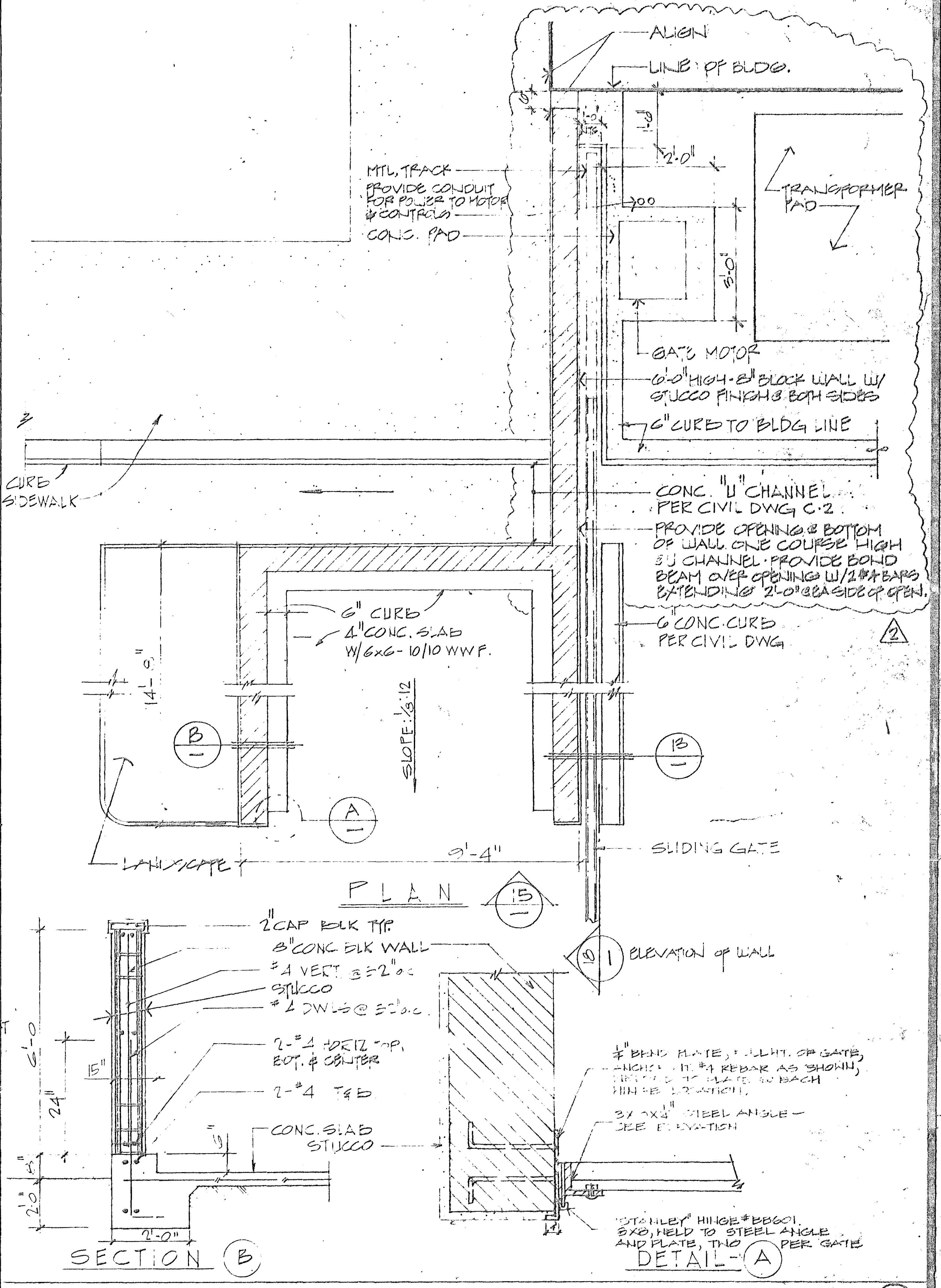
ALIGN
LINE OF BLDG.
MTL. TRACK
PROVIDE CONDUIT FOR POWER TO MOTOR & CONTROLS
CONC. PAD
1'-0"
2'-0"
3'-0"
TRANSFORMER PAD
GATE MOTOR
6'-0" HIGH - 8" BLOCK WALL W/ STUCCO FINISH @ BOTH SIDES
6" CURB TO BLDG LINE
CURB
SIDEWALK
CONC. "U" CHANNEL PER CIVIL DWG C-2
PROVIDE OPENING @ BOTTOM OF WALL ONE COURSE HIGH @ U CHANNEL. PROVIDE BOND BEAM OVER OPENING W/ 2 #4 BARS EXTENDING 2'-0" @ EA SIDE OF OPEN.
6" CONC. CURB PER CIVIL DWG
2
6" CURB
4" CONC. SLAB W/ 6x6-10/10 WWF.
14'-0"
SLOPE: 1/8:12
B
A
13
LANDSCAPE
9'-4"
SLIDING GATE
PLAN 15
18 1 ELEVATION OF WALL
2" CAP BLK TYP.
8" CONC BLK WALL
#4 VERT @ 32" o.c.
STUCCO
#4 DWLS @ 32" o.c.
2-#4 HORIZ TOP, BOT. & CENTER
2-#4 T & B
CONC. SLAB
STUCCO
6'-0"
15"
24"
8"
2'-0"
2'-0"
6"
SECTION B
1/4" BEND PLATE, FULL HT. OF GATE, ANCHOR W/ #4 REBAR AS SHOWN, WELDED TO PLATE @ EACH HINGE LOCATION.
3x3x1/4" STEEL ANGLE - SEE ELEVATION
"STANLEY" HINGE #BB601 8x8, WELD TO STEEL ANGLE AND PLATE, TWO PER GATE
DETAIL - A

TRASH ENCLOSURE DETAILS SCALE: 1/2" = 1'-0" ①

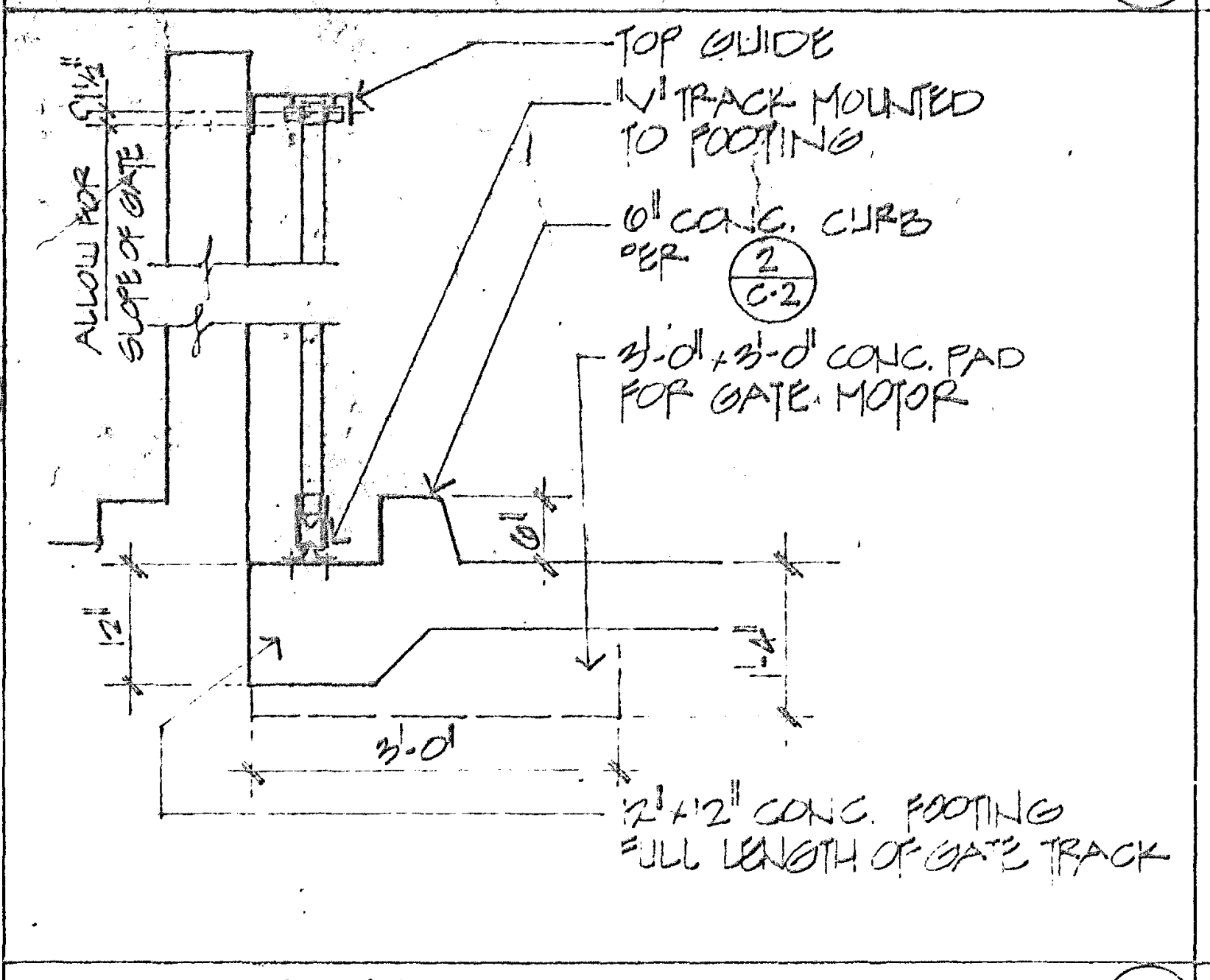
TOP GUIDE
"V" TRACK MOUNTED TO FOOTING.
6" CONC. CURB PER 2 / C-2
3'-0" x 3'-0" CONC. PAD FOR GATE MOTOR
ALLOW FOR SLOPE OF GATE
1 1/2"
12"
6"
3'-0"
12"x12" CONC. FOOTING FULL LENGTH OF GATE TRACK

GATE TRACK ⑫

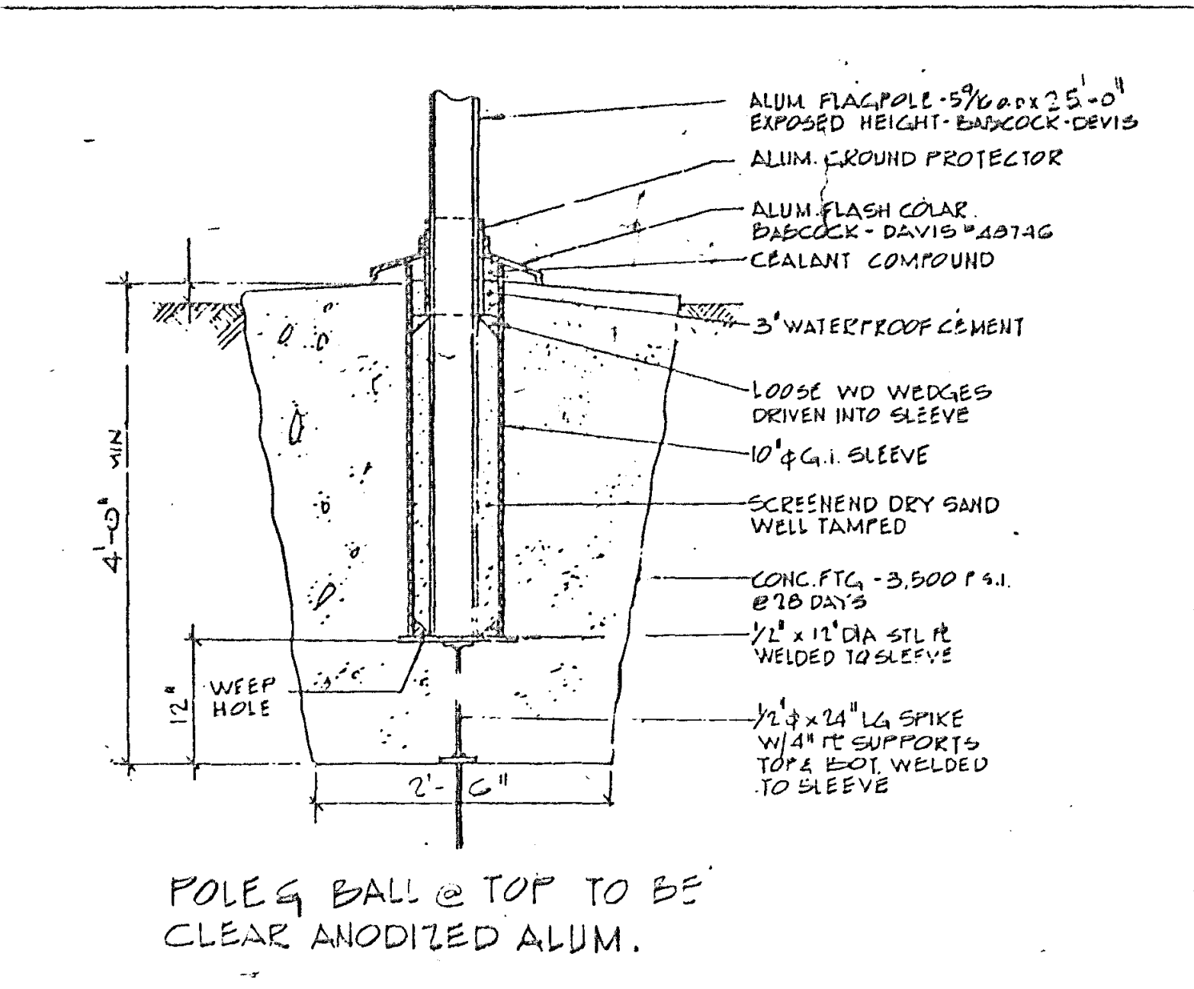
ALUM. FLAGPOLE - 5 5/16" o.d. x 25'-0" EXPOSED HEIGHT - BABCOCK-DAVIS
ALUM. GROUND PROTECTOR
ALUM. FLASH COLAR BABCOCK - DAVIS #48746
SEALANT COMPOUND
3" WATERPROOF CEMENT
LOOSE WD WEDGES DRIVEN INTO SLEEVE
10" ϕ G.I. SLEEVE
SCREENED DRY SAND WELL TAMPED
CONC. FTG. - 3,500 P.S.I. @ 28 DAYS
1/2" x 12" DIA STL PL WELDED TO SLEEVE
1/2" ϕ x 24" LG SPIKE W/ 4" PL SUPPORTS TOP & BOT. WELDED TO SLEEVE
WEEP HOLE
4'-0" MIN
12"
2'-6"

POLE & BALL @ TOP TO BE CLEAR ANODIZED ALUM.

FLAGPOLE FOOTING ⑨

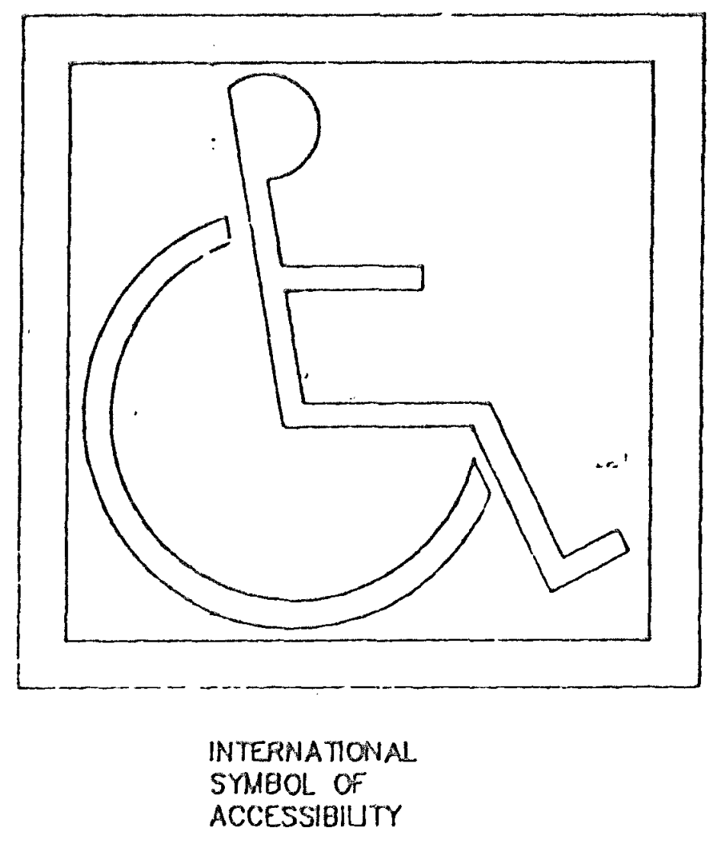

INTERNATIONAL SYMBOL OF ACCESSIBILITY

SURFACE IDENTIFICATION

SYMBOL OF ACCESSIBILITY
SIZE: 3 FT. SQUARE
BLUE PAINT ON ASPHALT

SIGN IDENTIFICATION

SYMBOL OF ACCESSIBILITY
SIZE: MIN. 70 SQ. IN
HEIGHT: 80 IN.
REFLECTORIZED SIGN CONSTRUCTED OF PORCELAIN ON STEEL BEADED TEXT OR EQUAL

UNAUTHORIZED VEHICLES...

SIZE, POSTING, LOCATION & TEXT OF SIGN PER TITLE 24 STATE OF CALIF. SEC. 2-7102

HANDICAP SYMBOL ④

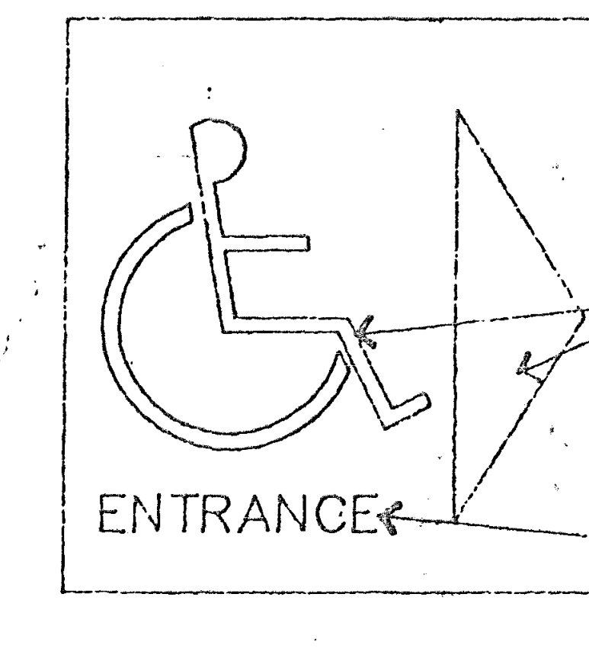
ENTRANCE
WHITE ON BLUE BACKGROUND
LETTERS TO BE HELVETICA MEDIUM

NOTE

OTHER SIDE SIM. POINT ARROW TOWARD BUILDING ENTRY

HANDICAP ACCESS SIGN ②

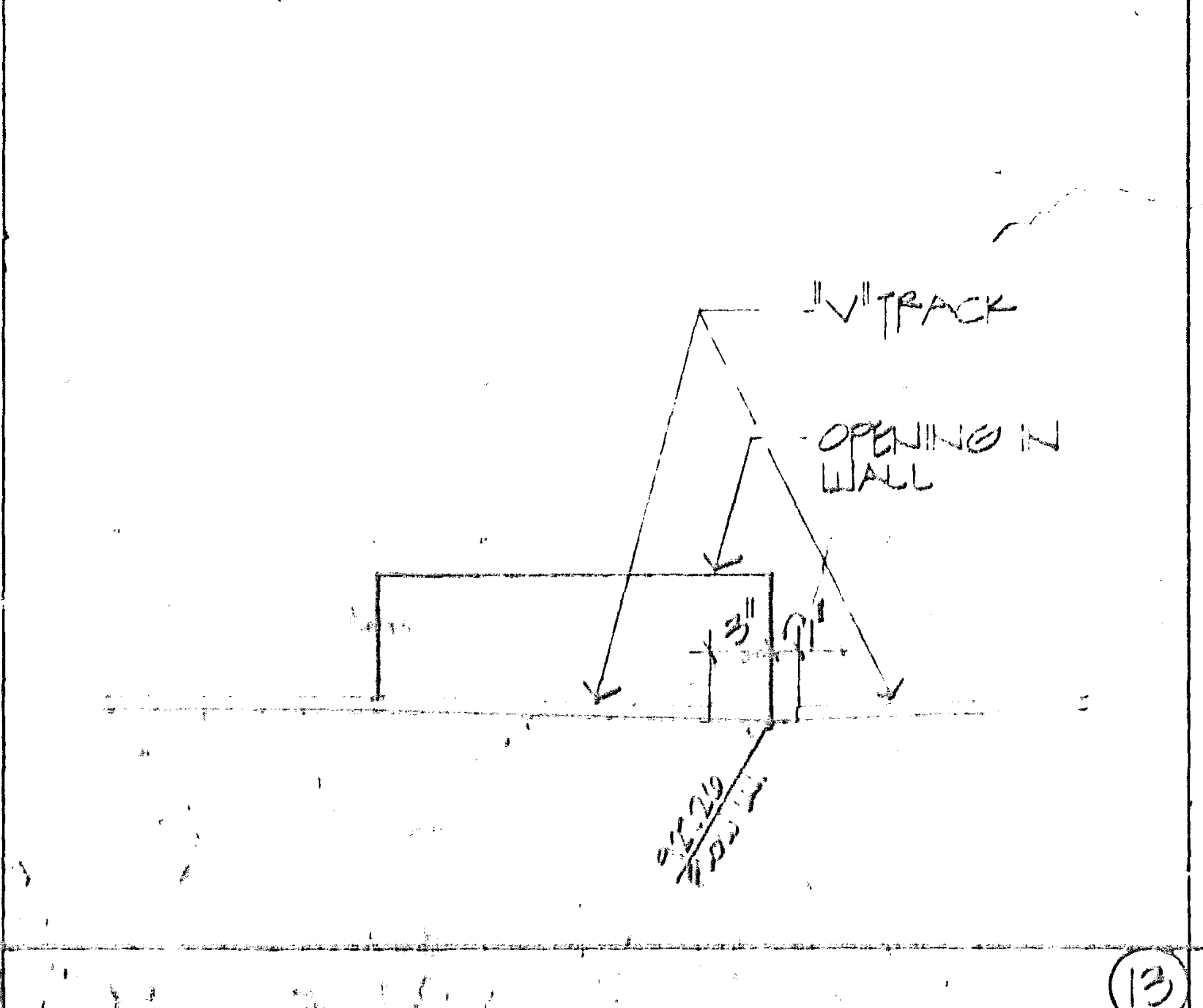
"V" TRACK
OPENING IN WALL
3"
1"
927.20
F.S.

⑬

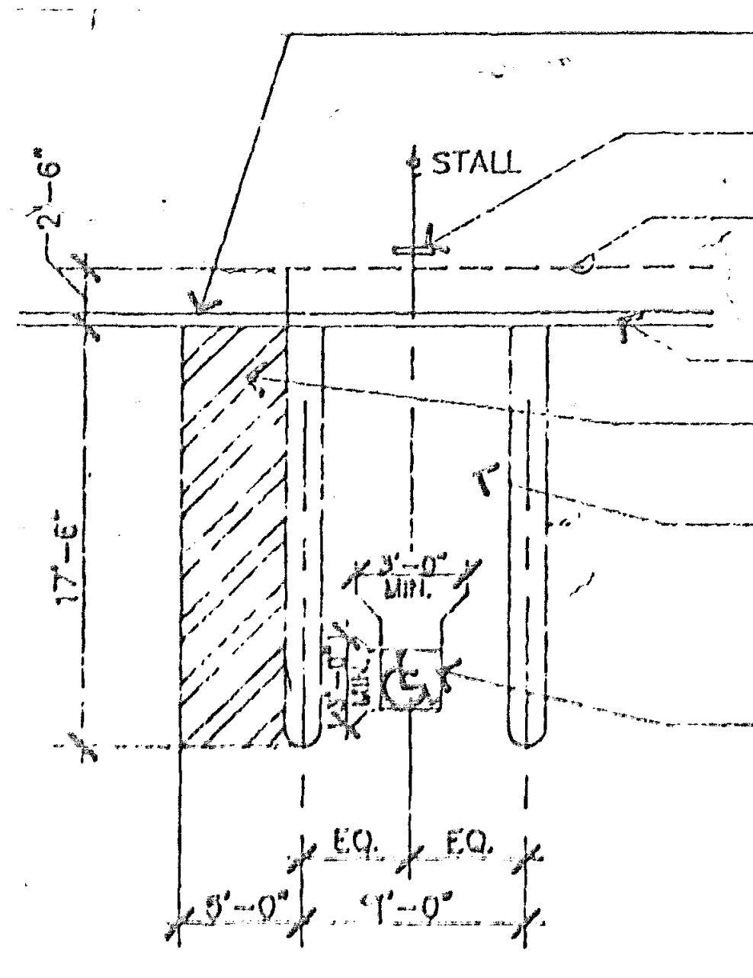
PROVIDE APPROVED RAMP OR CURB CUT
℄ STALL
HANDICAP PARKING STALL SIGN
LINE OF CAR OVERHANG
CONC. CURB
4" WIDE WHITE PAINTED STRIPES - TYP.
SLOPE SHALL NOT EXCEED 1/4" PER FT. IN ANY DIRECTION (TYP. FOR HANDICAP STALLS ONLY)
TYP. SYMBOL PER CITY & CAL. OSHA STDS.
2'-6"
17'-6"
3'-0" MIN.
EQ.
EQ.
5'-0"
9'-0"

HANDICAP STALLS TO MEET ALL TITLE 24 REQUIRMENTS

HANDICAP PARKING STALL ⑩

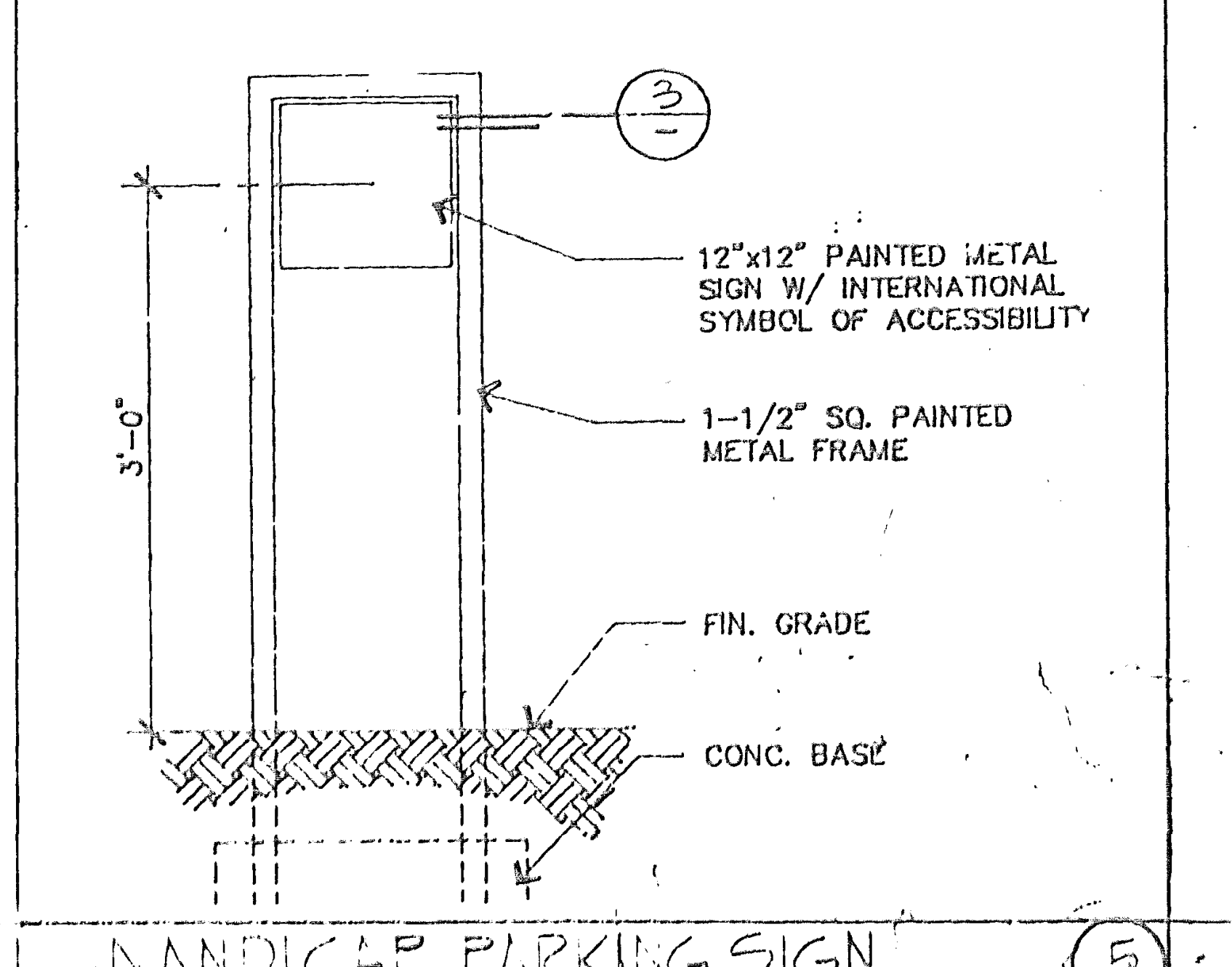
3
12"x12" PAINTED METAL SIGN W/ INTERNATIONAL SYMBOL OF ACCESSIBILITY
1-1/2" SQ. PAINTED METAL FRAME
3'-0"
FIN. GRADE
CONC. BASE

HANDICAP PARKING SIGN ⑤

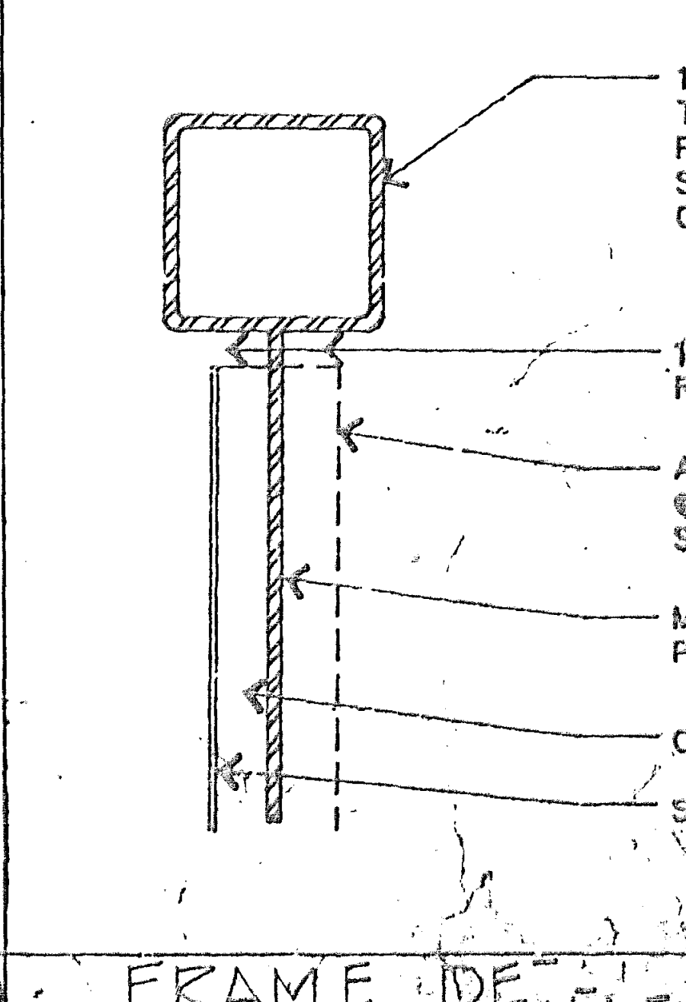
1-1/2" X 1-1/2" METAL TUBE - PRIME & PAINT GLOSS BLACK SILICONE POLYESTER OR EQUAL
1/4" x 1/4" CONT REVEAL
ADDITIONAL SIGN FACE @ BUILDING ACCESS SIGN
METAL PANEL - PAINT BLACK
CORE
SIGN

FRAME DETAIL ③

260 Newport Center Drive
Suite 330
Newport Beach
California

ARCHITECTURAL DETAILS

SANTA MARGARITA FIRE STATION #45

30131 AVENTURA AVENUE
RANCHO SANTA MARGARITA
SANTA MARGARITA, CA

Project No.
Designer
Drawn by
Date 11-1-89 AS BUILT
Scale
Revisions
Sheet

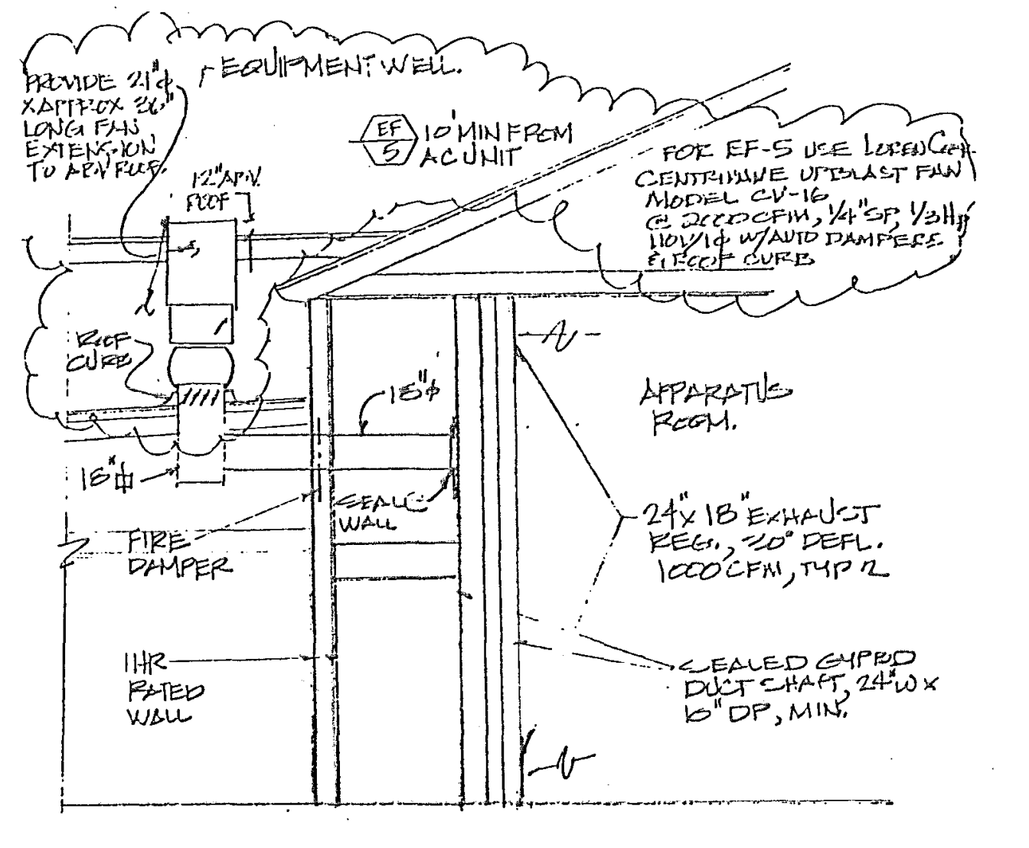
PROVIDE 21"ϕ X APPROX 36" LONG FAN EXTENSION TO ABV ROOF
EQUIPMENT WELL.
EF 5 10' MIN FROM AC UNIT
FOR EF-5 USE LOREN COOK CENTRIFUGAL UPBLAST FAN MODEL CV-16 @ 2000 CFM, 1/4" SP, 1/3 HP 110V/1ϕ W/AUTO DAMPERS & ROOF CURB
12" ABV. ROOF
ROOF CURB
18"ϕ
16"ϕ
APPARATUS ROOM.
SEAL WALL
FIRE DAMPER
24"x 18" EXHAUST REG., 20° DEFL. 1000 CFM, TYP 2
1HR RATED WALL
SEALED GYPBD DUCT SHAFT, 24" W x 6" DP, MIN.

SECTION

N.T.S. (11)

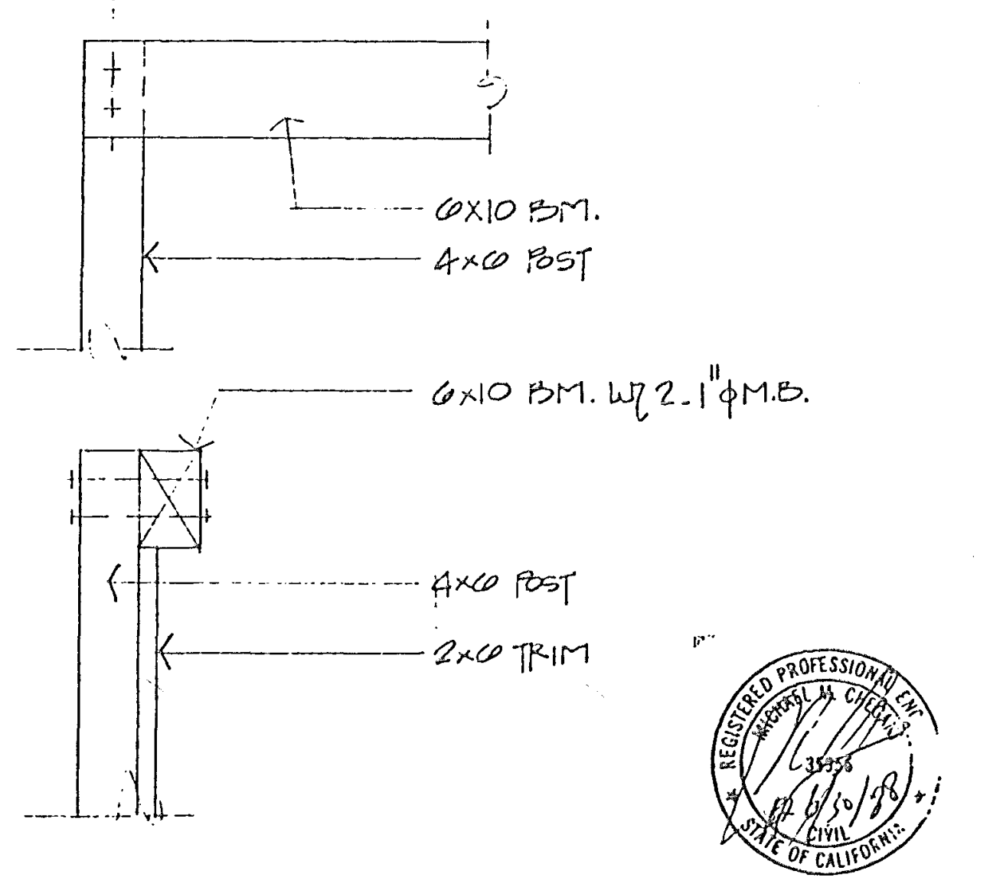
2-1"ϕ M.B.
6X10 BM.
4×6 POST
6×10 BM. W/ 2-1"ϕ M.B.
4×6 POST
2×6 TRIM

REVISED FRAMING AT TOWER

N.T.S. (8)

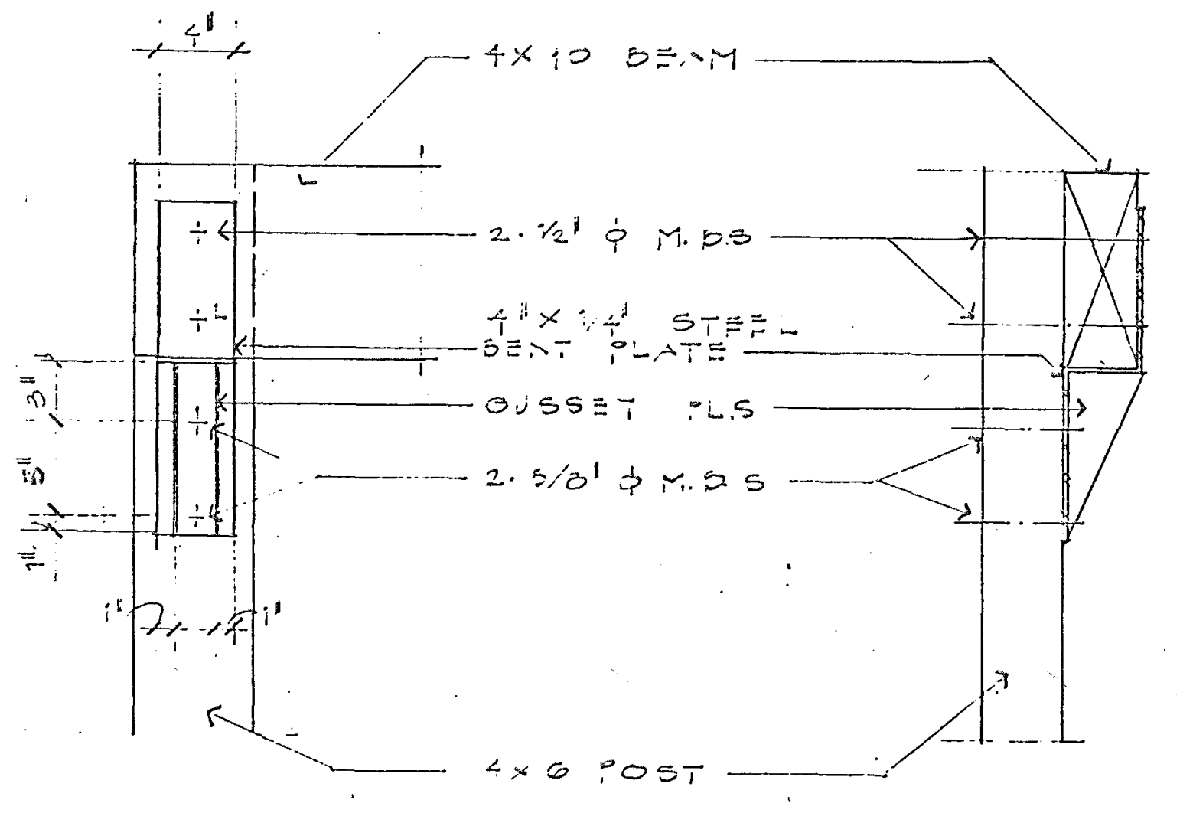
4"
4X10 BEAM
2-1/2" ϕ M.B.S
4" X 1/4" STEEL BENT PLATE
GUSSET PLS
2-5/8" ϕ M.B.S
4×6 POST
3"
5"
1"

POST TO BEAM CONN.

N.T.S. (5)

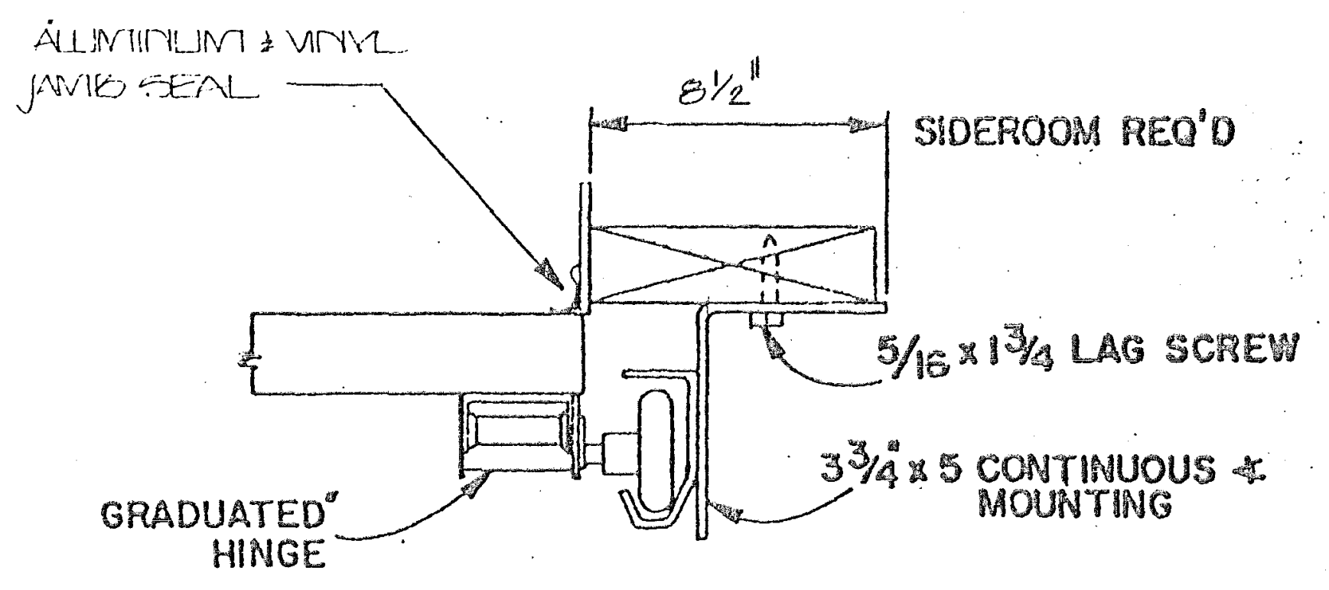
ALUMINUM & VINYL JAMB SEAL
8½"
SIDEROOM REQ'D
5/16 x 1¾ LAG SCREW
3¾ x 5 CONTINUOUS * MOUNTING
GRADUATED HINGE

JAMB DETAIL

SCALE 3":1'-0" (1)

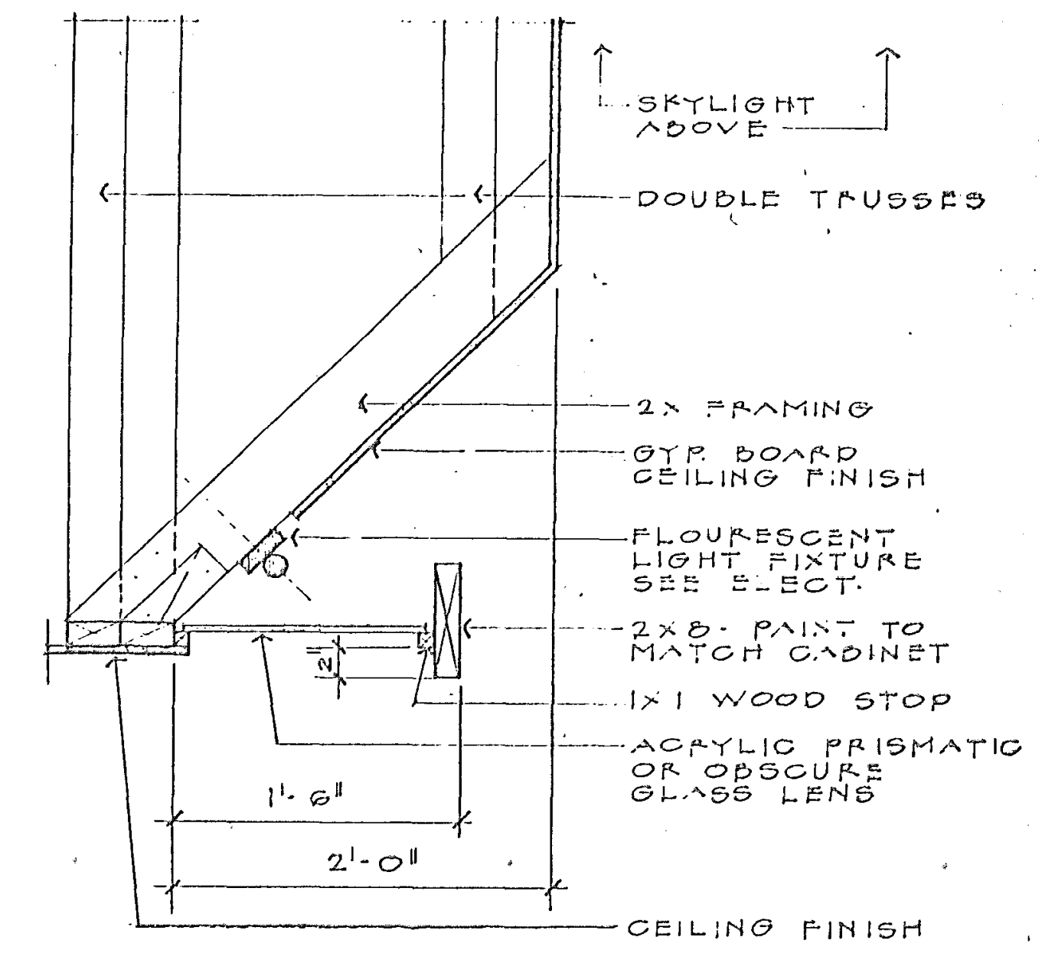
SKYLIGHT ABOVE
DOUBLE TRUSSES
2X FRAMING
GYP. BOARD CEILING FINISH
FLOURESCENT LIGHT FIXTURE SEE ELECT.
2X8 - PAINT TO MATCH CABINET
1X1 WOOD STOP
ACRYLIC PRISMATIC OR OBSCURE GLASS LENS
1'-6"
2'-0"
CEILING FINISH

SKYLIGHT DETAILS

N.T.S. (12)

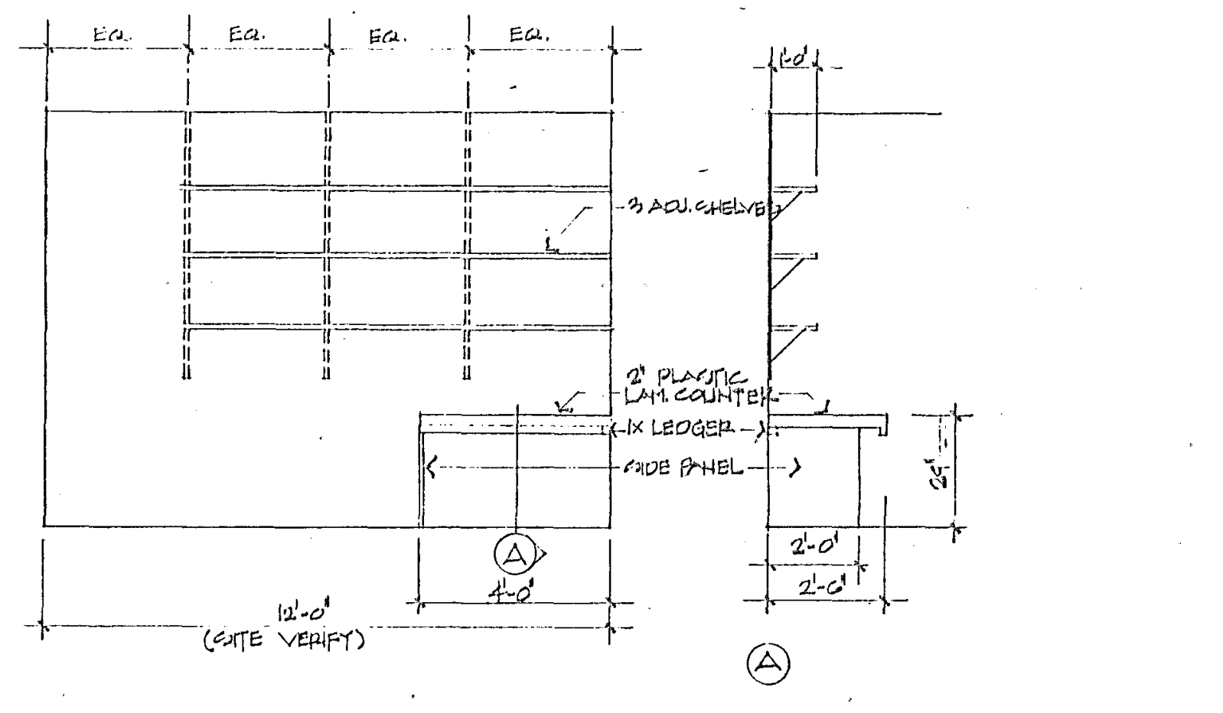
EQ.
EQ.
EQ.
EQ.
1'-0"
3 ADJ. SHELVES
2" PLASTIC LAM. COUNTER
1X LEDGER
SIDE PANEL
24"
2'-0"
2'-6"
4'-0"
12'-0" (SITE VERIFY)
A

NOTES:

1. SHELVES & SIDE PANEL TO BE CONSTRUCTED OF 1" MELIMINE. COLOR TO BE APPROVED BY ARCHITECT.
2. PLASTIC LAM. COUNTER TO BE 'WILSONART' TYROL GREEN, #D 354-6.

N.T.S.

COUNTER & ADJ. SHELVES - RM. 1

(13)

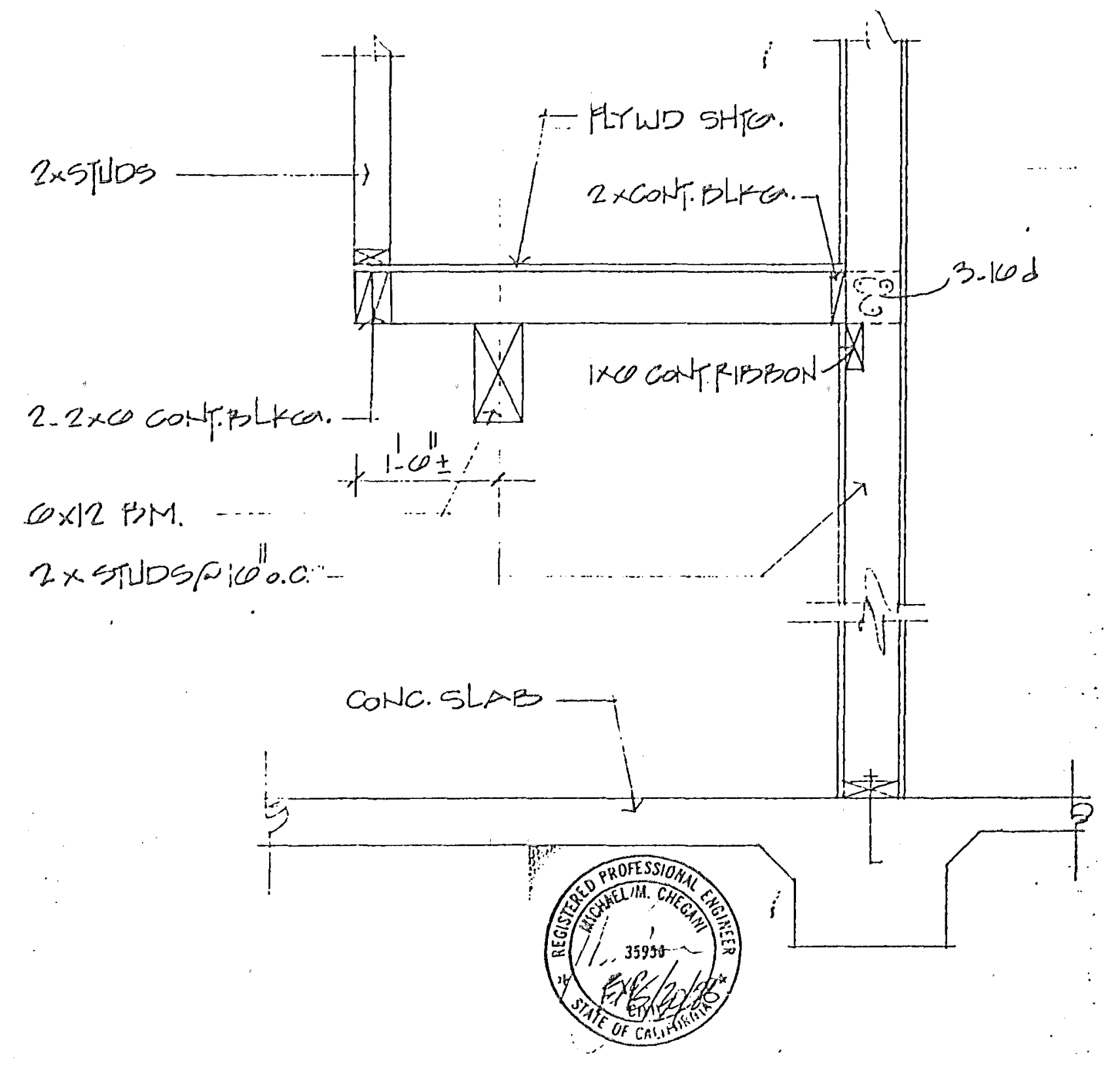
2x STUDS
PLYWD SHTG.
2x CONT. BLKG.
3-16d
1x6 CONT. RIBBON
2-2x6 CONT. BLKG.
1'-6"±
6x12 BM.
2x STUDS @ 16" o.c.
CONC. SLAB

SECTION AT STORAGE

N.T.S. (9)

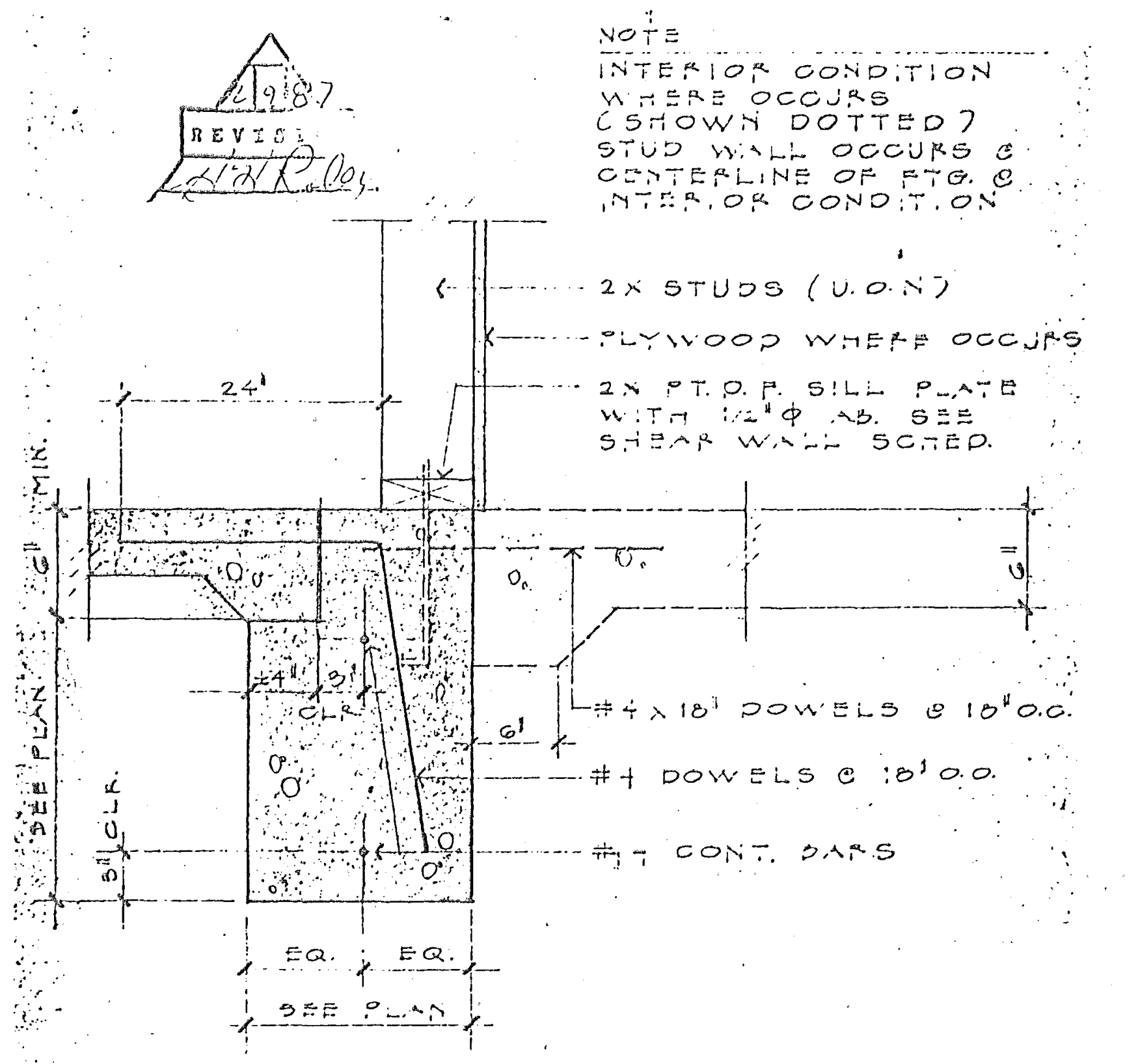
REVISION 2/9/87
NOTE
INTERIOR CONDITION WHERE OCCURS (SHOWN DOTTED) STUD WALL OCCURS @ CENTERLINE OF FTG. @ INTERIOR CONDITION
2X STUDS (U.O.N.)
PLYWOOD WHERE OCCURS
2X P.T.D.F. SILL PLATE WITH 1/2"ϕ A.B. SEE SHEAR WALL SCHED.
24"
6" MIN.
SEE PLAN
3" CLR.
4"
3" CLR.
6"
#4 X 18" DOWELS @ 18" O.C.
#4 DOWELS @ 18" O.C.
#4 CONT. BARS
EQ.
EQ.
SEE PLAN

EXT./INT. WALL FOOTING

N.T.S. (6)

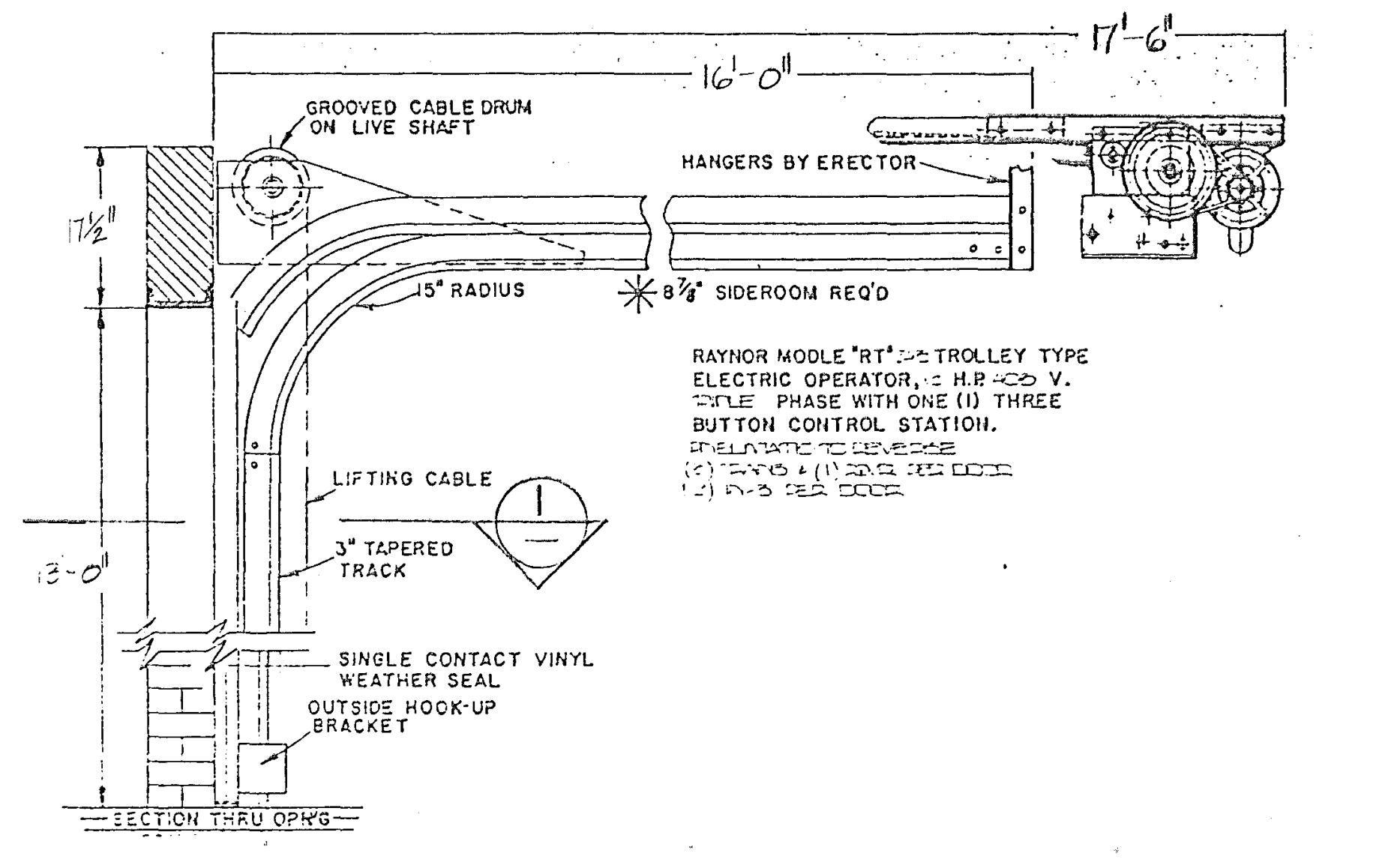
17'-6"
16'-0"
GROOVED CABLE DRUM ON LIVE SHAFT
HANGERS BY ERECTOR
17½"
15" RADIUS
8⅞" SIDEROOM REQ'D
RAYNOR MODLE "RT" TROLLEY TYPE ELECTRIC OPERATOR, H.P. V. TRIPLE PHASE WITH ONE (1) THREE BUTTON CONTROL STATION.
LIFTING CABLE
3" TAPERED TRACK
13'-0"
SINGLE CONTACT VINYL WEATHER SEAL
OUTSIDE HOOK-UP BRACKET
SECTION THRU OPN'G

SECTION THRU OPENING

N.T.S. (2)

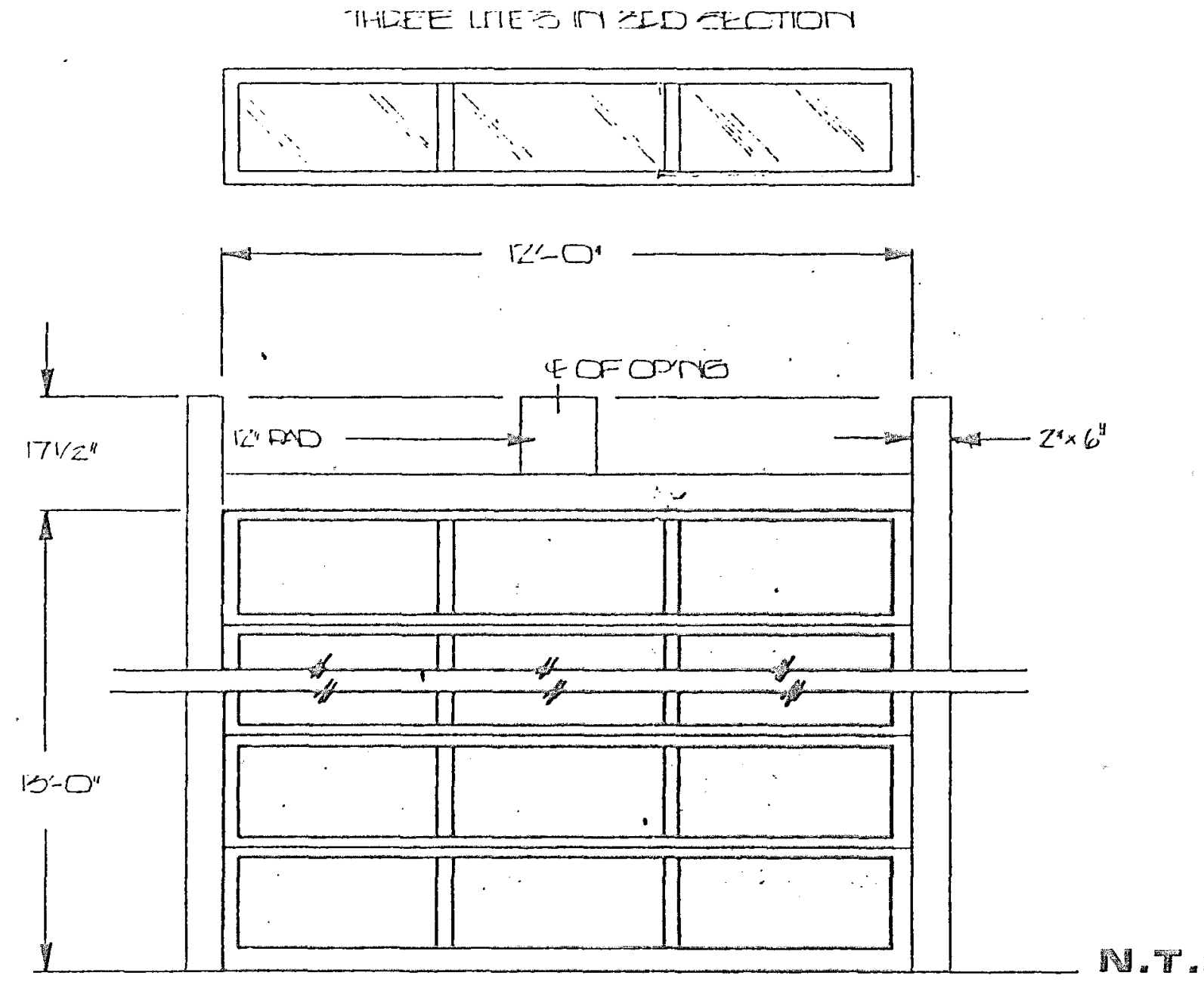
THREE LITES IN 3RD SECTION
12'-0"
℄ OF OP'NG
12" PAD
2"x 6"
17½"
13'-0"

N.T.S.

INT. ELEV. OF OVERHEAD DOOR

(3)

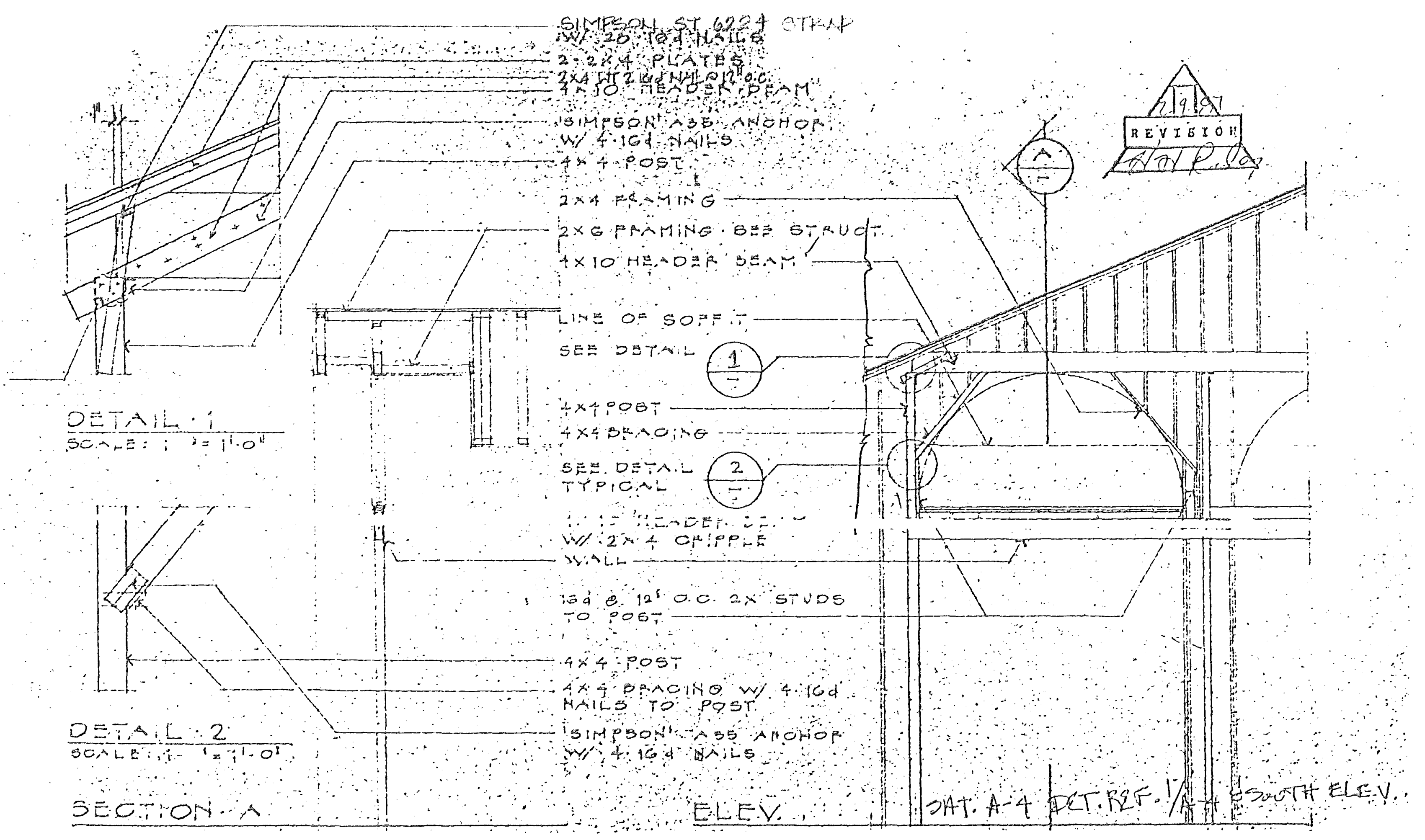
SIMPSON ST 6224 STRAP W/ 28 16d NAILS
2-2X4 PLATES
2X4 HT 2 W/ NAIL @ 12" O.C.
4X10 HEADER BEAM
SIMPSON A35 ANCHOR W/ 4-16d NAILS
4X4 POST
2X4 FRAMING
2X6 FRAMING - SEE STRUCT.
4X10 HEADER BEAM
LINE OF SOFFIT
SEE DETAIL 1
4X4 POST
4X4 BRACING
SEE DETAIL 2 TYPICAL
W/ 2X4 CRIPPLE WALL
16d @ 12" O.C. 2X STUDS TO POST
4X4 POST
4X4 BRACING W/ 4-16d NAILS TO POST
SIMPSON A35 ANCHOR W/ 4-16d NAILS
DETAIL 1
DETAIL 2
SECTION A
ELEV.
SHT. A-4 DET. REF. 1/A-4 SOUTH ELEV.
REVISION 2/9/87
A

REVISED FRAMING

N.T.S. (10)

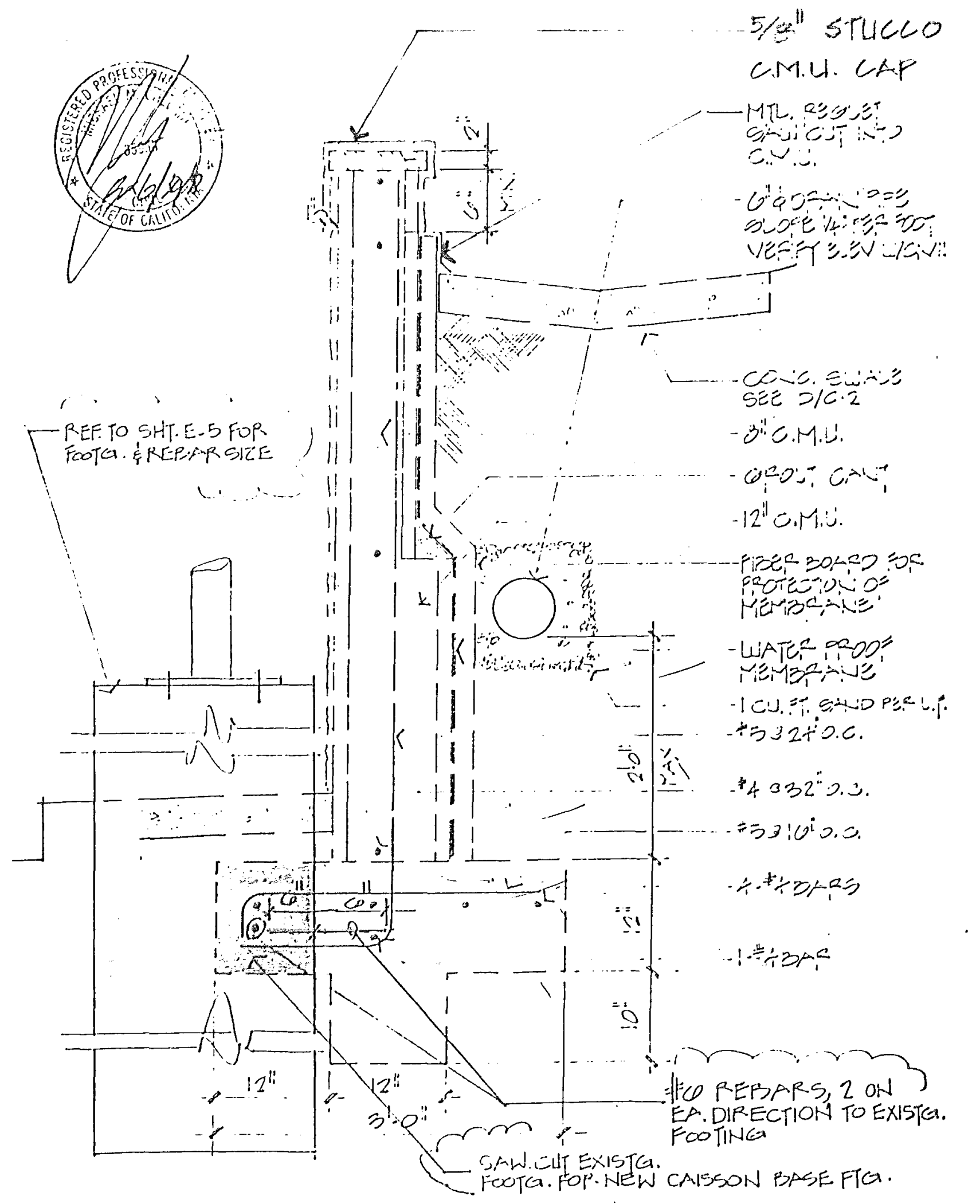
5/8" STUCCO
C.M.U. CAP
MTL. REGLET SAW CUT INTO C.M.U.
6"ϕ DRAIN PIPE SLOPE 1/4" PER FOOT VERIFY W/ CIVIL
CONC. SWALE SEE D/C-2
8" C.M.U.
GROUT CAV.
12" C.M.U.
REF. TO SHT. E-5 FOR FOOTG. & REBAR SIZE
FIBER BOARD FOR PROTECTION OF MEMBRANE
WATER PROOF MEMBRANE
1 CU. FT. SAND PER L.F.
#5 @ 24" O.C.
#4 @ 32" O.C.
#5 @ 16" O.C.
4-#4 BARS
1-#4 BAR
12"
12"
3'-0"
#6 REBARS, 2 ON EA. DIRECTION TO EXISTG. FOOTING
SAW CUT EXISTG. FOOTG. FOR NEW CAISSON BASE FTG.

RETAINING WALL

SCALE 1":1'-0" (7)

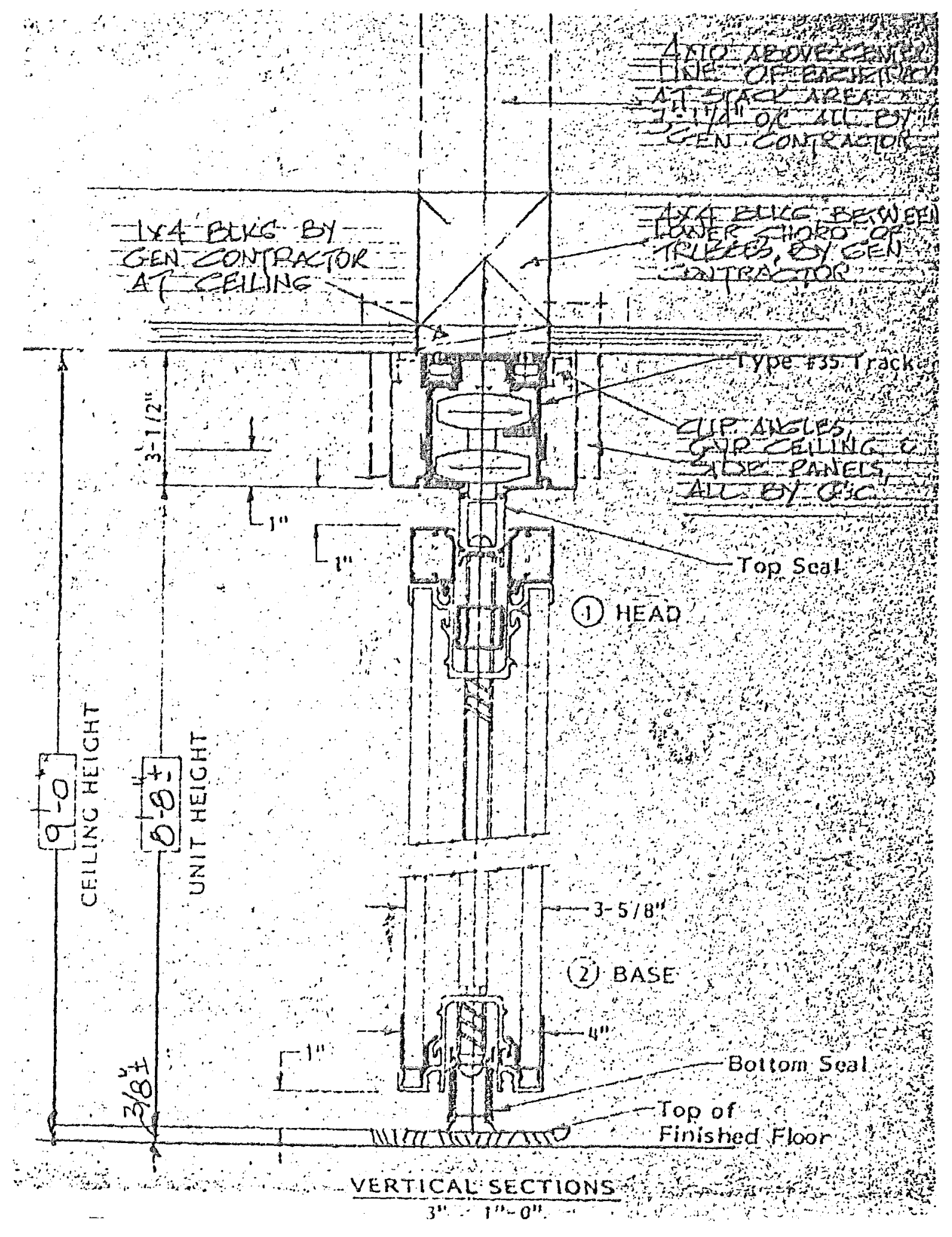
4X10 ABOVE CENTERLINE OF BARRIER AT STACK AREA 3'-1/4" O.C. ALL BY GEN. CONTRACTOR
1X4 BLKG. BY GEN. CONTRACTOR AT CEILING
4X4 BLKG. BETWEEN LOWER CHORD OF TRUSSES, BY GEN. CONTRACTOR
Type #35 Track
CLIP ANGLES, GYP. CEILING & SIDE PANELS, ALL BY G.C.
3-1/2"
1"
1"
Top Seal
① HEAD
CEILING HEIGHT 9'-0"
UNIT HEIGHT 8'-8"±
3-5/8"
② BASE
4"
1"
Bottom Seal
3/8"±
Top of Finished Floor
VERTICAL SECTIONS
3" = 1'-0"

MOVABLE PARTITION

N.T.S. (4)

McCULLOCH ARCHITECTS

260 Newport Center Drive
Suite 330
Newport Beach
California 92660
714 / 759-9141

THESE DRAWINGS REPRESENT AS-BUILT CONDITIONS TO THE BEST OF OUR KNOWLEDGE BASED UPON VISUAL INSPECTION OF THE BUILDING DURING OCTOBER 1989.

WILLIAM C. McCULLOCH
ARCHITECT

AS-BUILT DRAWINGS

SANTA MARGARITA FIRE STATION #45

30131 AVENTURA AVENUE
RANCHO SANTA MARGARITA
SANTA MARGARITA, CA

Project No.
Designer
Drawn by
Date 11-1-89 AS-BUILT
Scale

Revisions	By	Date

Sheet
A-12AB
of Sheets

PLAN NO. 90781-1703

GRADING & ONSITE IMPROVEMENT PLAN
FOR
SANTA MARGARITA BUSINESS PARK
COUNTY FIRE STATION NO. 45

EARTHWORK QUANTITIES (RAW)

CUT	2385	C.Y.
FILL	223	C.Y.
EXPORT	2162	C.Y.

CONSTRUCTION NOTES & ESTIMATE OF QUANTITIES

①	CONST. 6" CONC. WITH #3 BARS @ 18" O.C. BOTH WAYS OVER 6" AGG. BASE	21,015 S.F.
②	CONST. 6" CURB PER DETAIL ON SHEET 2.	743 L.F.
③	CONST. CONC. "U" CHANNEL PER DETAIL ON SHEET 2.	25 L.F.
④	CONST. 8" PVC DRAIN	123 L.F.
⑤	CONST. INLET TYPE 1 PER OCEMA STD. PLAN 301.	1 EA.
⑥	CONST. 10" PVC DRAIN.	133 L.F.
⑦	CONST. CONC. COLLAR PER OCEMA STD. PLAN 317.	1 EA.
⑧	CONST. 4" CONC. SIDEWALK.	2,223 S.F.
⑨	PLACE GRAVEL BAGS, 2 BAGS HIGH, EXCEPT AS NOTED	85 L.F.
⑩	CONST. 3" THICK CONC. V-CHANNEL WITH 6"×6"-W1.4×W1.4 WWM (SEE SECT. D-D & SECT. E-E)	164 L.F.
⑪	CONST. CONC. JUNCTION STRUCTURE PER DETAIL ON SHEET 1	1 EA
⑮	CONST. SPEE-D-BASIN NDS-20 GRATE W/NDS 100 BASIN & 8" PIPE RISER.	2 EA
⑯	CONST. SPEE-D-BASIN NDS-20 GRATE W/NDS 250 BASIN & 8" PIPE RISER.	2 EA
⑰	CONST. SPEE-D-BASIN NDS-20 GRATE W/NDS 200 BASIN & 8" PIPE RISER.	2 EA
⑫	CONST. 4" PVC OR EQUAL DRAIN PIPE.	200 LF

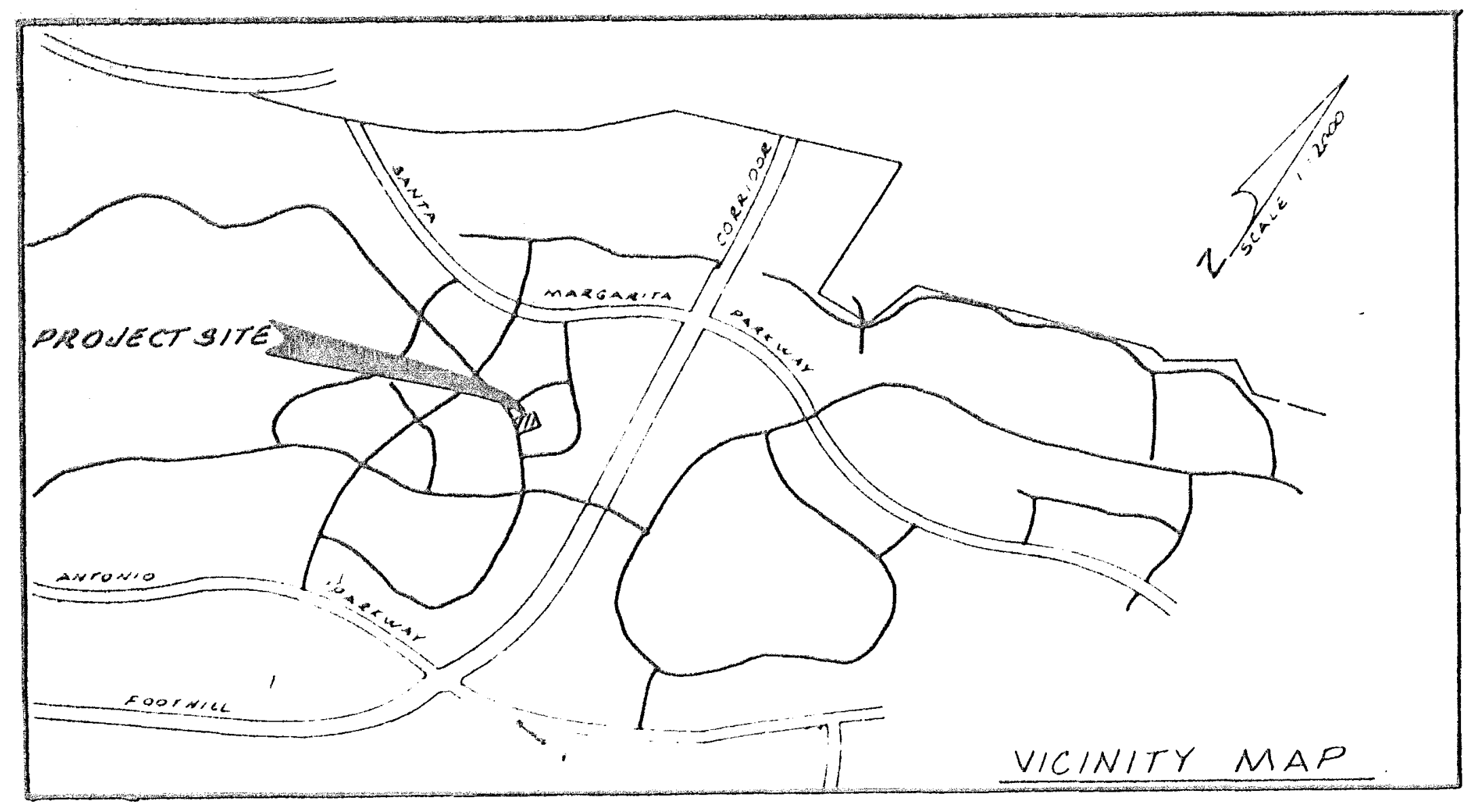

VICINITY MAP

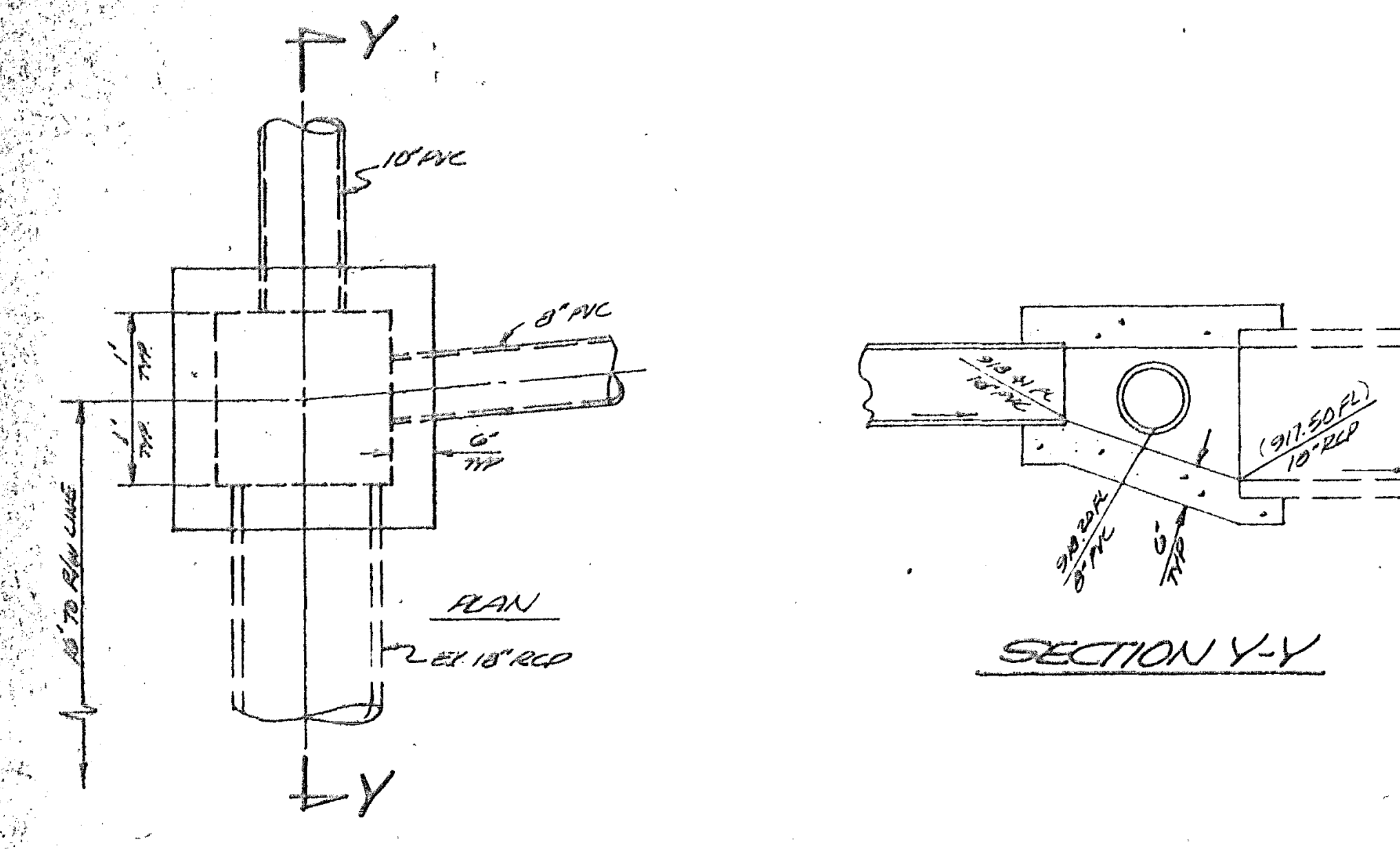

DETAIL - JUNCTION STRUCTURE
SCALE: 1" = 2'

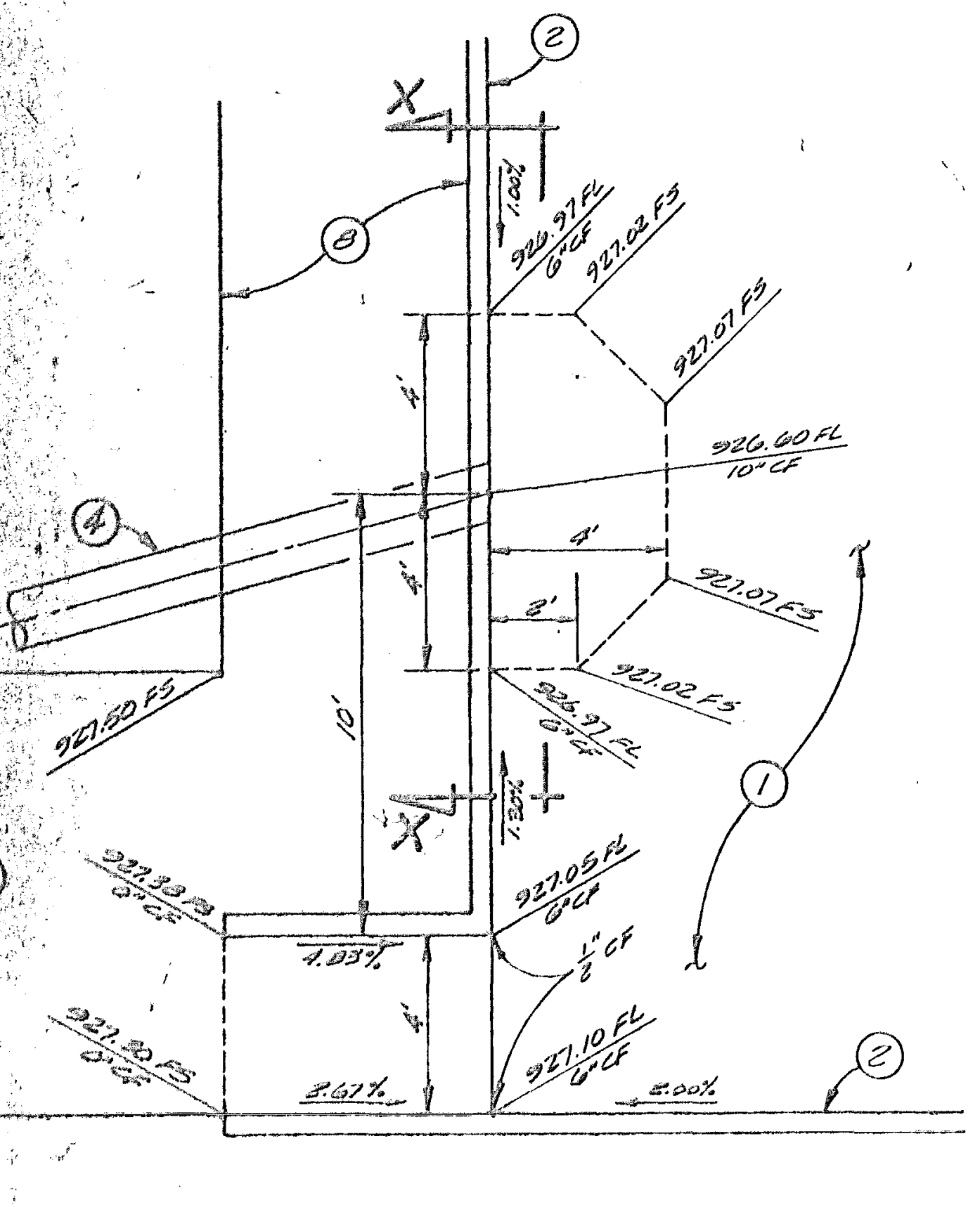

DETAIL "A"
SCALE: 1" = 4'

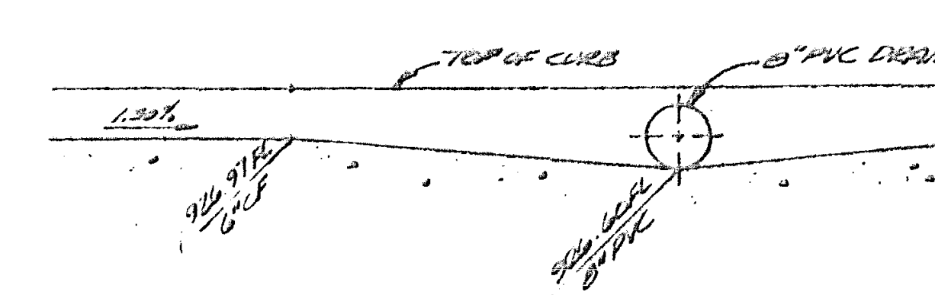

SECTION X-X
SCALE: 1" = 2'

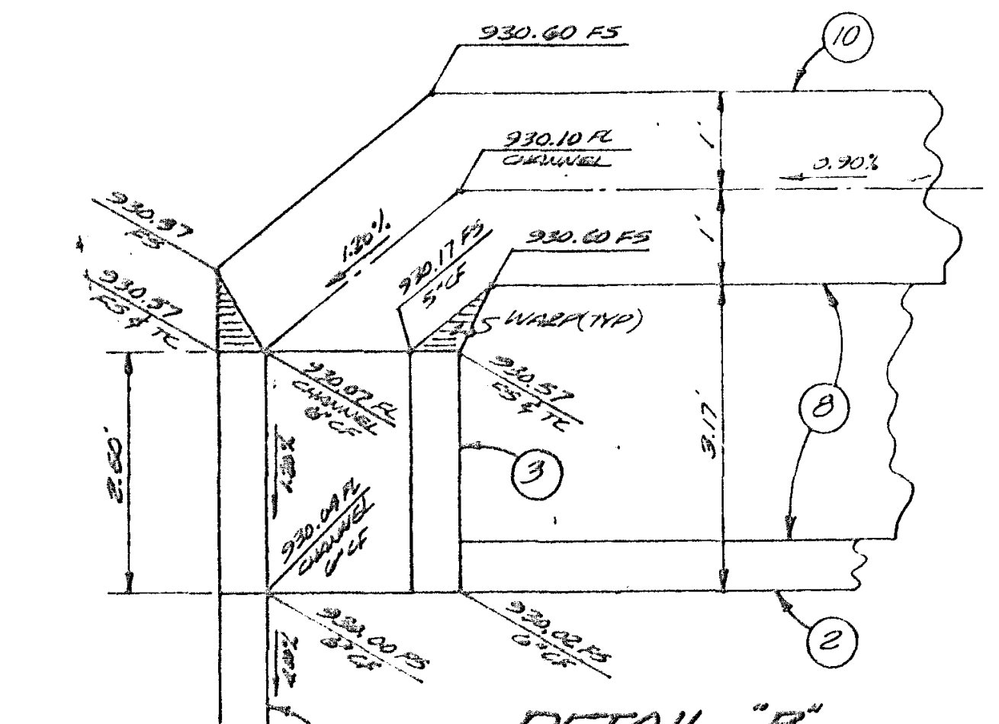

DETAIL "B"
SCALE: 1" = 4'

EROSION CONTROL NOTES

1. IN CASE OF EMERGENCY CALL ____________ AT ____________.
2. THE UNDERSIGNED CIVIL ENGINEER WILL SUPERVISE EROSION CONTROL WORK AND INSURE THAT WORK IS IN ACCORDANCE WITH APPROVED PLANS.

RCE 20259 ____________ DATE ____________ 9-30-89 EXPIRES

3. EQUIPMENT AND WORKERS FOR EMERGENCY WORK SHALL BE MADE AVAILABLE AT ALL TIMES DURING THE RAINY SEASON. NECESSARY MATERIALS SHALL BE AVAILABLE ON SITE AND STOCKPILED AT CONVENIENT LOCATIONS TO FACILITATE RAPID CONSTRUCTION OF TEMPORARY DEVICES WHEN RAIN IS IMMINENT.
4. DEVICES SHALL NOT BE REMOVED OR MODIFIED WITHOUT THE APPROVAL OF THE BUILDING OFFICIAL.
5. ALL REMOVABLE PROTECTIVE DEVICES SHALL BE IN PLACE AT THE END OF EACH WORKING DAY WHEN THE 5-DAY RAIN PROBABILITY FORCAST EXCEEDS 40%.
6. AFTER A RAINSTORM ALL SILT AND DEBRIS SHALL BE REMOVED FROM CHECK BERMS AND DESILTING BASINS AND THE BASINS PUMPED DRY.
7. GRADED AREAS AROUND THE TRACT PERMIMETER MUST DRAIN AWAY FROM THE FACE OF SLOPE AT THE CONCLUSION OF EACH WORKING DAY.
8. THE CONTRACTOR SHALL BE RESPONSIBLE AND TAKE NECESSARY PRECAUTIONS TO PREVENT PUBLIC TRESPASSING ONTO AREA WHERE IMPOUNDED WATER CREATES A HAZARDOUS CONDITION.

PAVING NOTES

1. Prior to rough grade release for building permits by the District grading inspector, the soils engineer shall submit for approval, pavement section recommendations based on "R" value analysis of the site subgrade soils, and expected traffic indices.
2. The aggregate base section shall be compacted to a minimum of 95% of maximum density. Maximum and field density to be determined as stated in Section 7010(c) of the 1970 Uniform Building Code, Chapter 70.
3. A "prime coat" shall be applied to the surface of the [illegible] aggregate base at a rate of 0.25 gal/SY. The prime coat shall be an MC-70, SC-70, or MC-250 liquid asphalt.
4. A "tack coat" [illegible] shall be applied between pavement layers and on existing pavement to be resurfaced at a rate of 0.10 gal/SY. The tack coat shall be a Type SS1 asphaltic emulsion.
5. A "seal coat" shall be applied to the finished surface at the rate of 0.10 gal/SY. The seal coat shall be a Type SS1 asphaltic emulsion with 60-70 grade liquid asphalt.
6. The asphalt concrete for parking lots shall be Type B with aggregate grading specifications of 1/2" maximum medium, as specified in the "Standard Specifications for Public Works Construction" and shall meet the requirements of EMA Std. Plan 805.
7. All concrete structures that come in contact with the onsite soils shall be constructed with Type 5 cement, unless deemed unnecessary by sulphate-content tests conducted by the soils engineer.
8. All planters adjacent to the foundations shall be sealed at the bottom to prevent moisture from reaching the foundation subgrade soils.
9. Export soil must go to a legal dump or to a permitted site approved by the District grading inspector.
10. A [illegible] shall meet the requirements of EMA Std. Plan 804 "Special Provisions [illegible]".
11. Coarse aggregate for asphalt concrete shall consist of material of which at least 75% by weight shall be crushed particles in lieu of the requirements of Subsection 400-4.2.3.
12. The viscosity grade of paving asphalt shall be AR 4000 or AR 8000 as determined by the Civil Engineer or Soil Engineer.
13. The exact proportions of aggregate and the amount of asphalt binder for each type of mixture shall be regulated as directed by the Engineer. (5.8% by dry weight of aggregate shall normally be the asphalt content).
14. Aggregate grading shall be III-B3, III-C2 or III-C3 as determined by the Engineer.
15. The final or surface layer of asphalt concrete shall not be placed until all on-site improvements have been completed, including all earthwork grading.

GRADING NOTES

- [1.] All work shall be in accordance with the Grading Code of the County of Orange and any special requirements of the permit.
- [2.] No grading shall be started without first notifying the Building Official. A pre-grading meeting at the site is required before start of grading with the following people present: Owner, grading contractor, design civil engineer, soils engineer, geologist, County grading inspectors or their representatives. A 48-hour notice is required.
- [3.] The permittee or his agent shall notify the Building Official when the grading operation is ready for each of the following inspections:
  - a) Initial Inspection: When the permittee is ready to begin work, but not less than two days before any grading or brushing is started.
  - b) Toe Inspection: After the natural ground or bedrock is exposed and prepared to receive fill, but before fill is placed.
  - c) Excavation Inspection: After the excavation is started, but before the vertical depth of the excavation exceeds ten feet.
  - d) Fill Inspection: After the fill placement is started, but before the vertical height of the fill exceeds ten feet.
  - e) Drainage Device Inspection: After forming of terrace drains, downdrains, or after placement of pipe in subdrains, but before any concrete or filter material is placed.
  - f) Rough Grading Inspection: When all rough grading has been completed. This inspection may be called for at the completion of rough grading without the necessity of the Building Official having previously reviewed and approved the reports.
  - g) Final Inspection: When all work, including installation of all drainage structures and other protective devices has been completed and the as-graded plan, professional verifications and the required reports have been submitted.
- [4.] Cut slopes shall be no steeper than 2 horizontal to 1 vertical.
- [5.] Fill slopes shall be no steeper than 2 horizontal to 1 vertical and shall have not less than 90% compaction out to the finished surface.
- [6.] Fills shall be compacted throughout to 90% density as determined by U.B.C. Std. No. 70-1-70, and certifiedy by the soils engineer.
- [7.] Areas to receive fill shall be properly prepared and approved by the Building Official and soils engineer prior to placing of fill.
- [8.] Fills shall be benched into competent material as per detail on plan.
- [9.] All existing fills shall be approved by EMA Regulation or removed before any additional fills are added.
- 10. The existing irrigation lines and cisterns shall be removed, or crushed in place and backfilled, and approved by EMA Regulation and soils engineer.
- [11.] The face of all cut and fill slopes shall be planted and maintained with a ground cover approved by EMA Regulation. An approved irrigation system or watering facilities may be required by EMA Regulation prior to rough grade approval.
- [12.] The stockpiling of excess material shall be approved by EMA Regulation prior to excavation.
- [13.] The design civil engineer, prior to rough grade approval, shall provide a minimum of one blue top per lot, set at the highest point in the finished drainage swale. The elevation of the floor shall also be provided to ensure proper clearance and fall to drainage swale. These elevations shall be noted on the building plans.
- [14.] All trench backfills shall be tested and verified by the site soils engineer per Grading Code.
- [15.] The engineering geologist and soils engineer shall, after clearing and prior to the placement of fill in canyons, inspect each canyon for areas of adverse stability and determine the presence or absence of sub-surface water or spring flows. If needed, subdrains will be designed and constructed prior to the placement of fill in each respective canyon.
- 16. Subdrain outlets shall be completed at the beginning of the subdrain construction.
- 17. The exact location of the subdrains shall be surveyed in the field for line and grade.
- 18. All cut slopes shall be investigated both during and after grading by an engineering geologist to determine if any slope stability problem exists. Should excavation disclose any geological hazards or potential geological hazards, the engineering geologist shall recommend necessary treatment to EMA Regulation for approval.
- 19. The permit applicant shall give reasonable notice to the owner of adjoining lands and buildings prior to beginning excavations which may affect the lateral and subjacent support of the adjoining property. The notice shall state the intended depth of excavation and when the excavating will begin. The adjoining owner shall be allowed at least 30 days and reasonable access on the permitted property to protect his structure if he so desires, unless otherwise provided by law.
- 20. When cut pads are brought to near grade the engineering geologist shall determine if the bedrock is extensively fractured or faulted and will readily transmit water. If considered necessary by the engineering geologist and soils engineer, a compacted fill blanket will be placed.
- [21.] The engineering geologist shall perform periodic inspections and submit a complete report and map upon completion of the rough grading.
- [22.] The final compaction report and certification from the soils engineer shall contain the type of field testing performed. Each test shall be identified with the method of obtaining the in-place density, whether sand cone or drive ring and shall be so noted for each test. Sufficient maximum density determinations shall be performed to verify the accuracy of the maximum density curves used by the field technician.
- [23.] The soils engineer and engineering geologist shall perform sufficient inspections during grading and construction so they may render an opinion concerning compliance with the plans, specifications, and code within their purview.
- [24.] The design civil engineer shall perform sufficient inspections and surveys during grading and construction so that he may verify in writing as to compliance with the plans, specifications and code within his purview.
- [25.] Dust shall be controlled by watering.
- [26.] Sanitary facilities shall be maintained on the site.
- [27.] The location and protection of all utilities is the responsibility of the permittee.

GRADING NOTES CONTINUED

- 28. Approved protective measures and temporary drainage provisions must be used to protect adjoining properties during the grading project.
- 29. The water wells shall be abandoned in compliance with the specifications approved by EMA Regulation and approved by the Special Services Section of the Building and Safety Department.
- 30. The oil wells shall be abandoned in compliance with the Orange County Oil Code to the approval of the Special Services Section of EMA Regulation, Special Services Section.
- 31. The existing cesspools and septic tanks shall be abandoned in compliance with the Uniform Plumbing Code to the approval of the Special Services Section of EMA Regulation.
- [32.] Prior to final approval, the design civil engineer shall certify to EMA Regulation the number of yards of cut, fill, and import moved during the grading operation.
- 33. The permittee shall comply with the Grading Code requirements when an excess of 5,000 cubic yards of earth is moved on public roadways from the site of an earth grading operation.
- [34.] The preliminary report and all subsequent reports as approved by the Earth Sciences Section, are considered a part of the approved grading plan.
- [35.] Type [illegible] concrete curbs shall have weakened plane joints at a maximum of 12 feet on center.
- 36. All brush shall be cleared for a horizontal distance of 1,000 feet from the structure(s) prior to rough grade release for building permits. If this requirement cannot be accomplished, fire retardant roofs must be specified on the building plans.
- 37. Prior to final approval, the grading contractor shall submit a statement of compliance to the approved grading plan.
- [38.] Grading operations and maintenance of equipment within one-half mile of human occupancy shall not be conducted between the hours of 8:00 p.m. and 7:00 a.m. or anytime on a Sunday or Federal holiday.
- 39. Slopes exceeding five feet in height must be planted with an approved plant material. In addition, slopes exceeding fifteen feet in height must be provided with an approved irrigation system, unless otherwise approved by the building official.

☐ [illegible]

[illegible] to placement of Base.

[illegible] pregrading meeting 48 hours prior to [illegible]

[illegible] a part of grading [illegible] a separate permit is required.

[illegible] approval from the County's OCEMA Traffic Section for a haul [illegible] removal of any excess material from the site.

PRIVATE ENGINEER'S NOTICE TO CONTRACTORS

The existence and location of any [illegible] shown on this plan are [illegible] best of our knowledge there are [illegible] these plans. The contractor is required to take [illegible] measures to protect the utilities shown and any other [illegible] not shown on these plans.

All contractors and subcontractors performing work [illegible] to these plans shall conduct their operations [illegible] provided a safe place to work and the public is protected [illegible] and subcontractors shall comply with the [illegible] Health Regulations of the U.S. Department of Labor [illegible] California Department of Industrial Relations Construction Safety Orders.

The civil engineer shall not be responsible [illegible] and subcontractors compliance with the [illegible] Regulations of the U.S. Department [illegible] California Department of Industrial Relations [illegible] Orders.

Contractor further agrees that he shall assume [illegible] sponsibility for [illegible] this project including safety of all persons and property [illegible] ment shall apply continuously and not be limited [illegible] and that the contractor shall defend, indemnify, and [illegible] the engineer harmless from any and all liability [illegible] tion with the performance of work on this project [illegible] arising from the sole negligence of the owner or the engineer.

UNAUTHORIZED CHANGES & USES

CAUTION: The engineer preparing these plans will not be responsible for, or liable for, unauthorized changes to or uses of these plans. All changes to the plans must be in writing and must be approved by the preparer of these plans.

California Council of Civil Engineers & Land Surveyors

[illegible]

California Council of Civil Engineers & Land Surveyors

UNDERGROUND SERVICE ALERT
1-800-422-4133
CALL USA/SC
FOR UNDERGROUND LOCATING
2 WORKING DAYS BEFORE YOU DIG.

BENCH MARK

O.C.S. BENCH MARK DESIGNATION 3BB-1-67 LOCATED IN THE NORTHEAST PART OF THE INTERSECTION OF MARGUERITE PARKWAY AND AVERY PARKWAY, 85 FEET NORTH OF CENTERLINE OF AVERY, 325 FEET EAST FROM THE CENTER OF THE MEDIAN OF MARGUERITE PARKWAY, SET ON THE TOP NORTHWEST CORNER OF A 3.5 BY 4.5 FOOT CONCRETE CATCH BASIN, LEVEL WITH THE SIDEWALK. [illegible] ADJUSTED ELEVATION [illegible]

LEGAL DESCRIPTION

LOT 2 TRACT 12625
A PORTION OF LOTS
19 & 20 OF TENTATIVE
TRACT Nº 12471

BASIS OF BEARINGS

THE BEARINGS SHOWN ON THESE PLANS ARE BASED ON THE LINE BETWEEN TRIANGULATION STATIONS (NGS BRASS CAP STAMPED "PLANO 1939") AND (O.C.S. [illegible]) BEING N 9°01'32" E PER THE CALIFORNIA COORDINATE SYSTEM, ZONE VI, 1975 DATUM ON THE FILE IN THE OFFICE OF THE ORANGE COUNTY SURVEYOR.

△1	[illegible]	ADDED SUBDRAIN SYSTEM, ROOF DRAINS & SCREEN WALLS	
	DATE	REVISIONS	APP / DATE

JOB ADDRESS

[illegible]
[illegible] SANTA MARGARITA, CA 92688

GRADING PERMIT 86-14997

OWNER

RANCHO SANTA MARGARITA
JOINT VENTURE
31726 RANCHO VIEJO RD. Nº 101
SAN JUAN CAPISTRANO, CA 92675
(714) 831-6450

SOILS ENGINEER

GOFFMAN & McCORMICK INC.
22822-A GRANITE WAY
LAGUNA HILLS, CA. 92653
(714) 951-1808

REGISTERED PROFESSIONAL ENGINEER
ANDREW G. GALL, JR.
20259
EXP 9/30/89
CIVIL
STATE OF CALIFORNIA

PLANS PREPARED UNDER SUPERVISION OF

WILLIAMSON and SCHMID
17782 SKY PARK BOULEVARD • IRVINE, CALIFORNIA 92714 • (714) 261-2222

APPROVED BY	RCE	EXPIRES	DATE
Andrew G. Gall, Jr.	20259	9/30/89	6/6/86

DESIGNED BY
DRAWN BY
CHECKED BY
FIELD BOOK

GRADING & ONSITE IMPROVEMENT PLAN

PLAN NO. 90781-170

SHEET [illegible] OF [illegible]

#90159-60

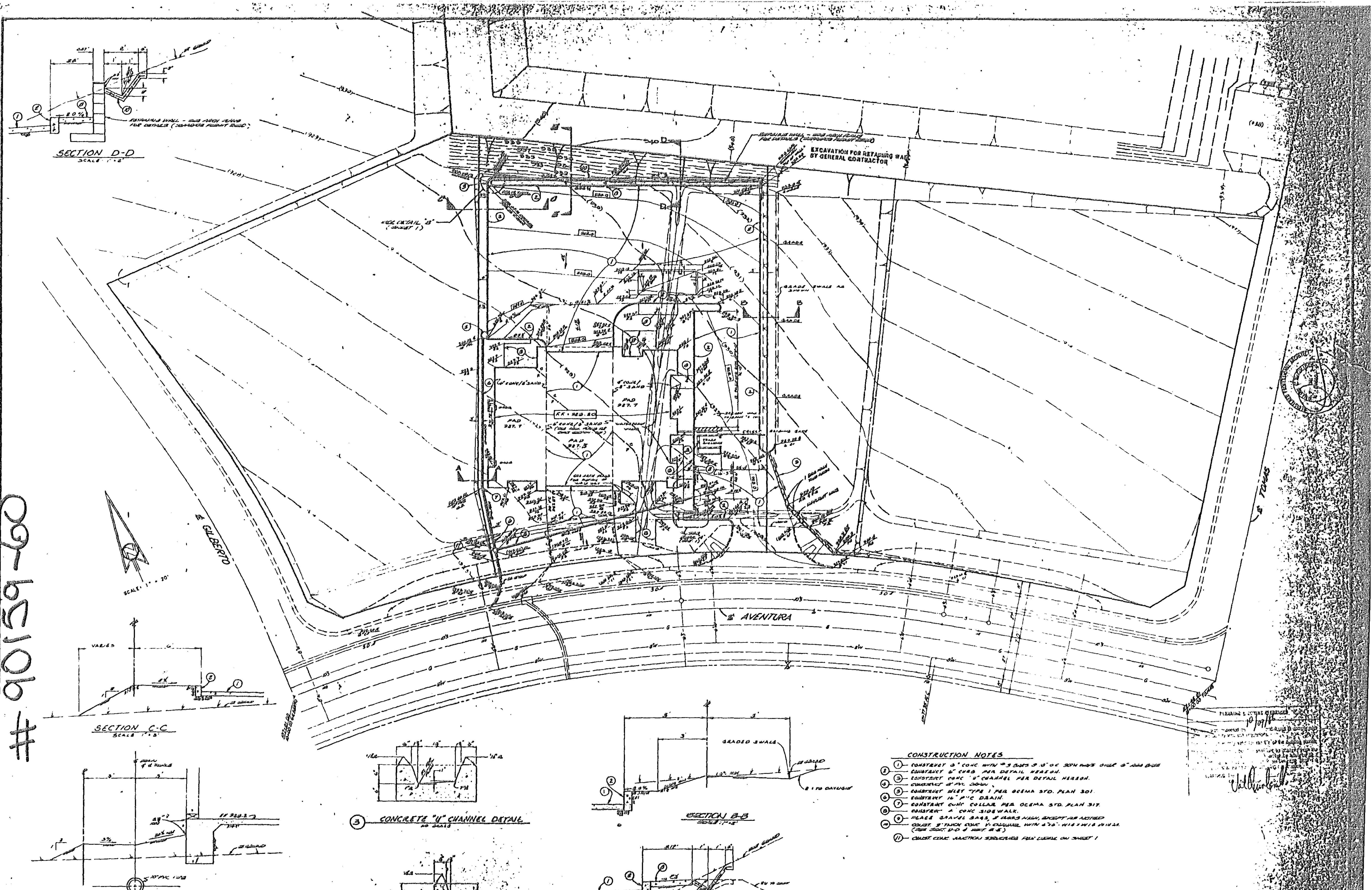
SECTION D-D
SCALE 1"=2'
EXCAVATION FOR RETAINING WALL BY GENERAL CONTRACTOR
PAD
PAD 927.7
PAD 927.5
FF = 928.50
4" CONC/2" SAND
GILBERTO
AVENTURA
TOMAS
SCALE 1" = 20'
SECTION C-C
SCALE 1"=3'
SECTION A-A
CONCRETE "U" CHANNEL DETAIL
NO SCALE
CONCRETE CURB DETAIL
NO SCALE
SECTION B-B
SECTION E-E
GRADED SWALE

CONSTRUCTION NOTES

- ① CONSTRUCT 8" CONC WITH #3 BARS @ 18" OC BOTH WAYS OVER 6" AGG BASE
- ② CONSTRUCT 6" CURB PER DETAIL HEREON.
- ③ CONSTRUCT CONC "U" CHANNEL PER DETAIL HEREON.
- ④ CONSTRUCT 8" PVC DRAIN.
- ⑤ CONSTRUCT INLET TYPE I PER OCEMA STD. PLAN 301.
- ⑥ CONSTRUCT 16" PVC DRAIN.
- ⑦ CONSTRUCT CONC COLLAR PER OCEMA STD. PLAN 317.
- ⑧ CONSTRUCT 4" CONC SIDEWALK.
- ⑨ PLACE GRAVEL BAGS, 3 BAGS HIGH, EXCEPT AS NOTED
- ⑩ CONST. 9" THICK CONC V-CHANNEL WITH 6"x6"-W1.4xW1.4 W.W.M. (SEE SECT. D-D & SECT. E-E)
- ⑪ CONST. CONC. JUNCTION STRUCTURE PER DETAIL ON SHEET 1

WILLIAMSON & SCHMID

DESIGNED BY
DRAWN BY
CHECKED BY
FIELD BOOK

GRADING & ONSITE IMPROVEMENT
PLAN

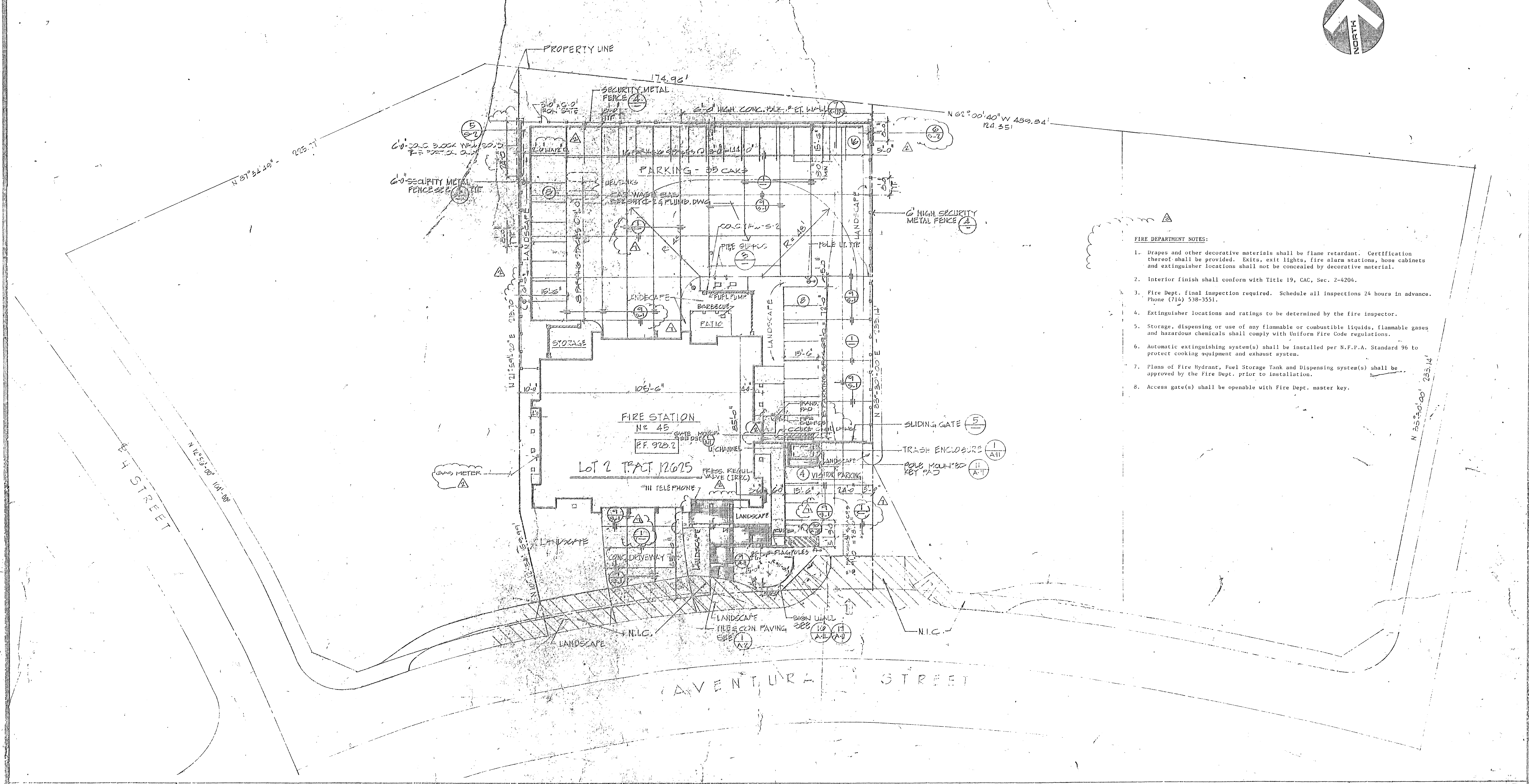
NORTH
PROPERTY LINE
174.96'
SECURITY METAL FENCE 4
3'-0" x 6'-0" IRON GATE
6'-0" HIGH CONC. BLK. P.E.T. WALL 7 A-12
N 62° 00' 40" W 489.84
124.351
6'-0" CONC. BLOCK WALL
6'-0" SECURITY METAL FENCE SEE 4 TYP.
N 67° 34' 48" 235.71'
16 PARKING SPACES @ 9'-0" = 144'-0"
PARKING - 35 CARS
FUEL TANKS
6'-0" HIGH SECURITY METAL FENCE 4
LANDSCAPE
8 PARKING SPACES @ 9'-0"
R = 48'
CONC. PAVING S-2
PIPE GUARDS 3
POLE LT. TYP.
15'-6"
LANDSCAPE
FUEL PUMP
BARBECUE
PATIO
STORAGE
N 21° 59' 20" E 215.70
10'-0"
105'-6"
FIRE STATION
Nº 45
GATE MOTOR SEE DET. 1 A-11
F.F. 928.2
U-CHANNEL
LOT 2 TRACT 12625
PRESS. REGUL. VALVE (IRRG)
GAS METER
911 TELEPHONE
TRANS. PAD
PIPE GUARDS
SLIDING GATE 5
TRASH ENCLOSURE 1 A-11
POLE MOUNTED KEY PAD 11 A-11
4 VISITOR PARKING
15'-6"
24'-0"
5'-0"
N 33° 30' 00" E 235.14'
N 10° 12' 54" 59.97'
N 16° 53' 00" 101.00
LANDSCAPE
CONC. DRIVEWAY
FLAGPOLES
LANDSCAPE
N.I.C.
TILE & CON. PAVING SEE 1 A-2
SIGN WALL SEE 16 A-11 17 A-11
N.I.C.
AVENTURA STREET
"A" STREET

SITE PLAN SC: 1"=20'

FIRE DEPARTMENT NOTES:

1. Drapes and other decorative materials shall be flame retardant. Certification thereof shall be provided. Exits, exit lights, fire alarm stations, hose cabinets and extinguisher locations shall not be concealed by decorative material.
2. Interior finish shall conform with Title 19, CAC, Sec. 2-4204.
3. Fire Dept. final inspection required. Schedule all inspections 24 hours in advance. Phone (714) 538-3551.
4. Extinguisher locations and ratings to be determined by the fire inspector.
5. Storage, dispensing or use of any flammable or combustible liquids, flammable gases and hazardous chemicals shall comply with Uniform Fire Code regulations.
6. Automatic extinguishing system(s) shall be installed per N.F.P.A. Standard 96 to protect cooking equipment and exhaust system.
7. Plans of Fire Hydrant, Fuel Storage Tank and Dispensing system(s) shall be approved by the Fire Dept. prior to installation.
8. Access gate(s) shall be openable with Fire Dept. master key.

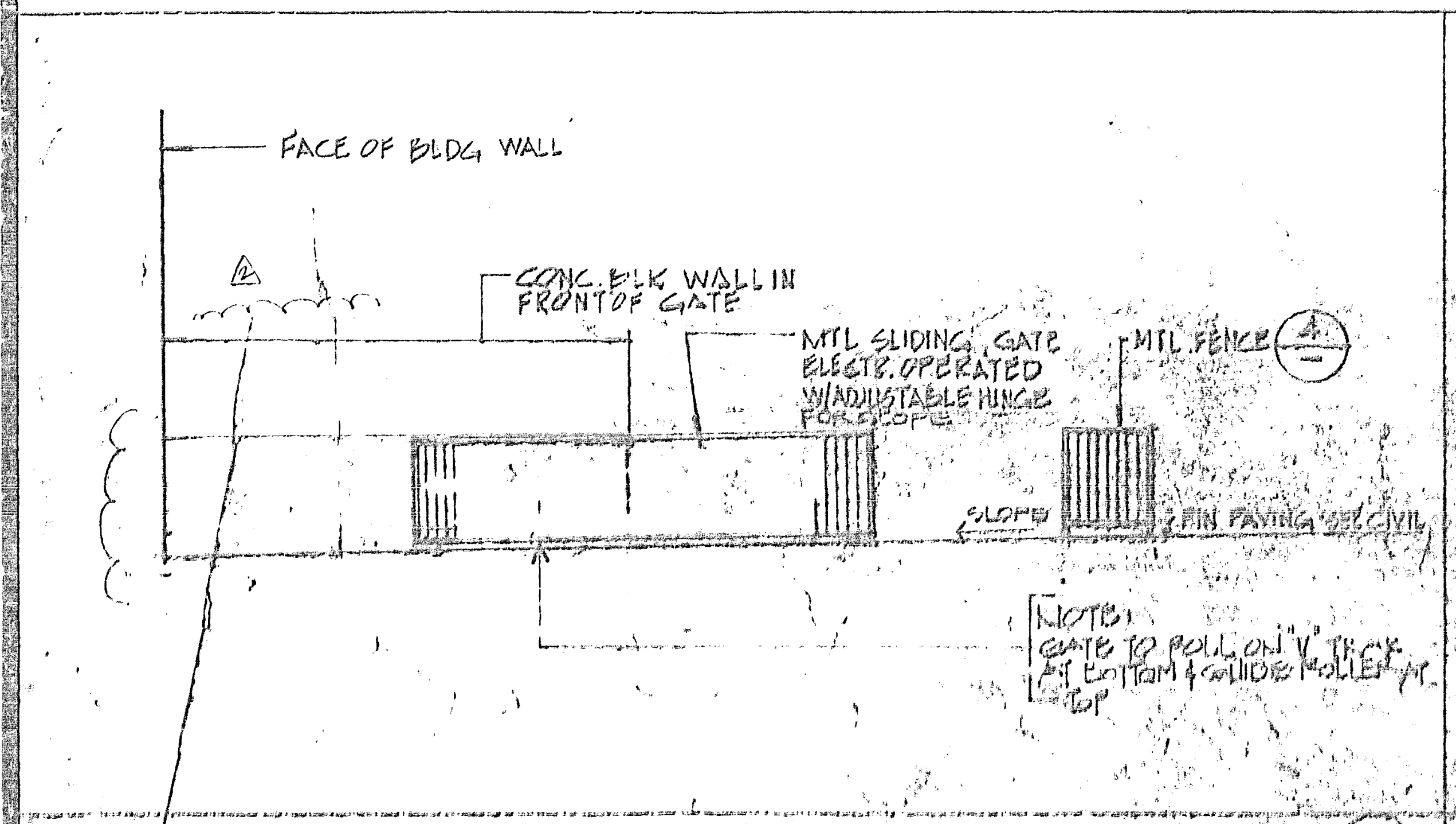
FACE OF BLDG WALL
CONC. BLK WALL IN FRONT OF GATE
MTL SLIDING GATE ELECTR. OPERATED W/ADJUSTABLE HINGE FOR SLOPE
MTL FENCE 4
SLOPE
FIN PAVING SEE CIVIL

NOTE: GATE TO ROLL ON "V" TRACK AT BOTTOM & GUIDE ROLLER AT TOP

SLIDING GATE ELEVATION SCALE: 1/8"=1'-0" (5)

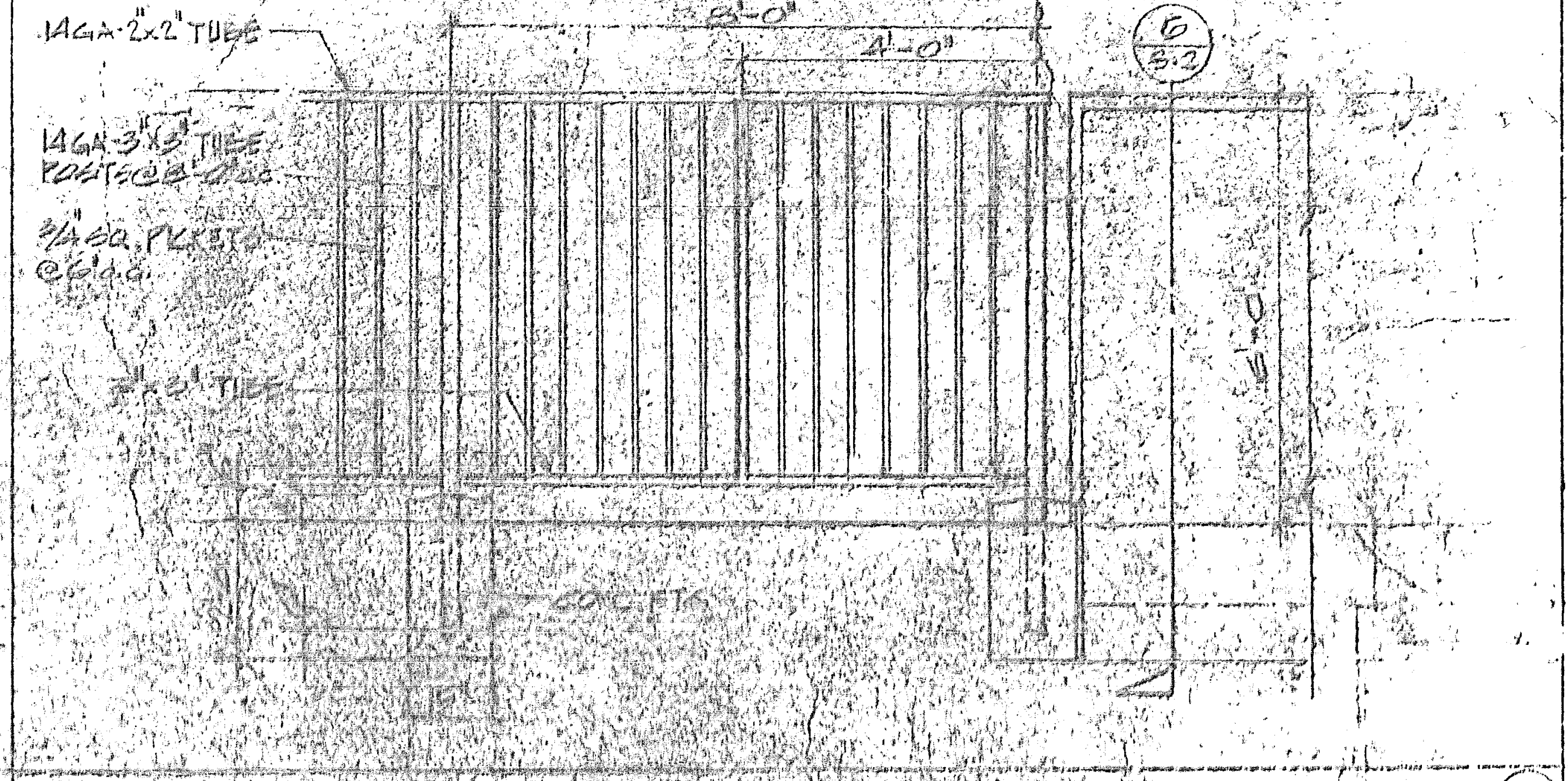
14GA. 2"x2" TUBE
8'-0"
4'-0"
6 S-2
14GA. 3"x3" TUBE POSTS @ 8'-0" o.c.
3/4" SQ. PICKETS @ 6" o.c.
2"x3" TUBE
6'-0"
CONC. FTG.

SECURITY FENCE DETAIL 1/2"=1'-0" (4)

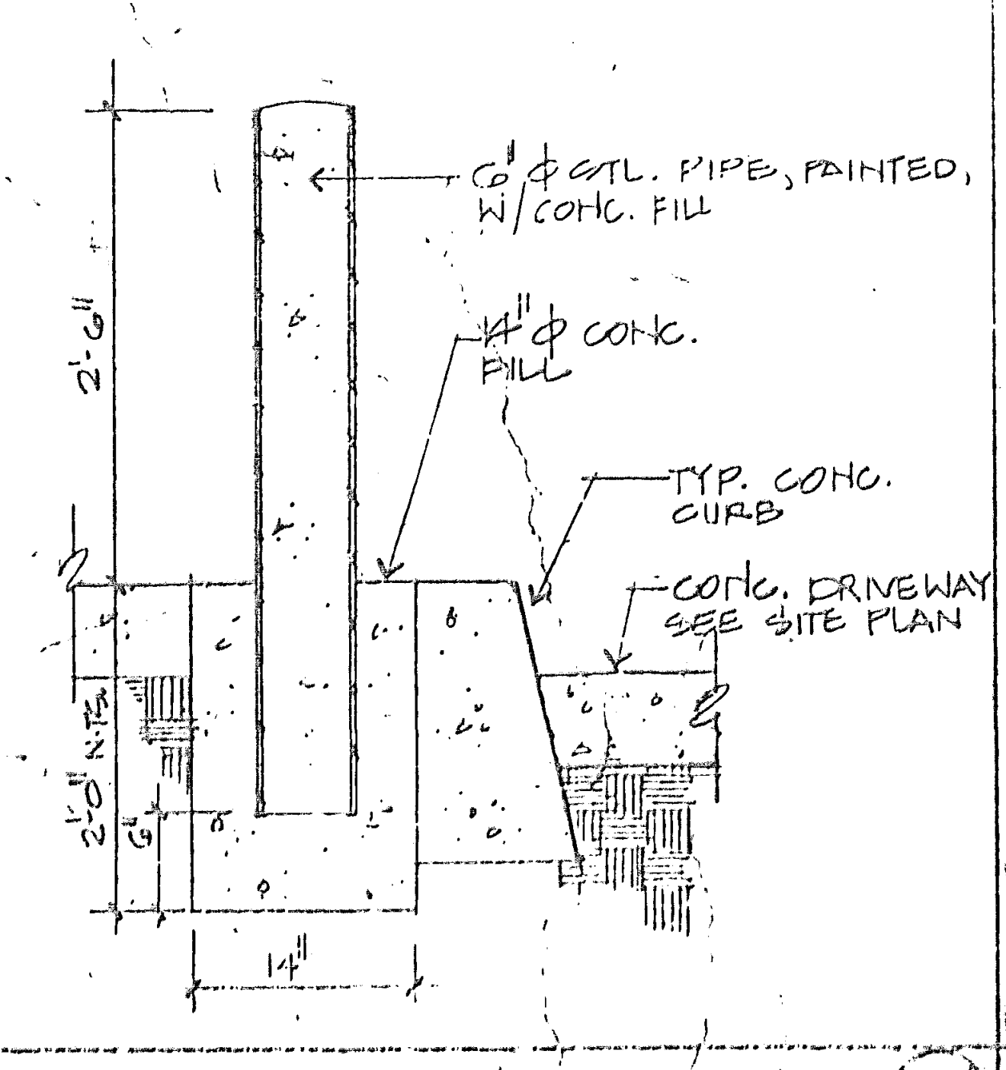
6" ϕ STL. PIPE, PAINTED, W/CONC. FILL
14" ϕ CONC. FILL
TYP. CONC. CURB
CONC. DRIVEWAY SEE SITE PLAN
2'-6"
2'-0"
6"
14"

PIPE GUARD DETAIL 1/2"=1'-0" (3)

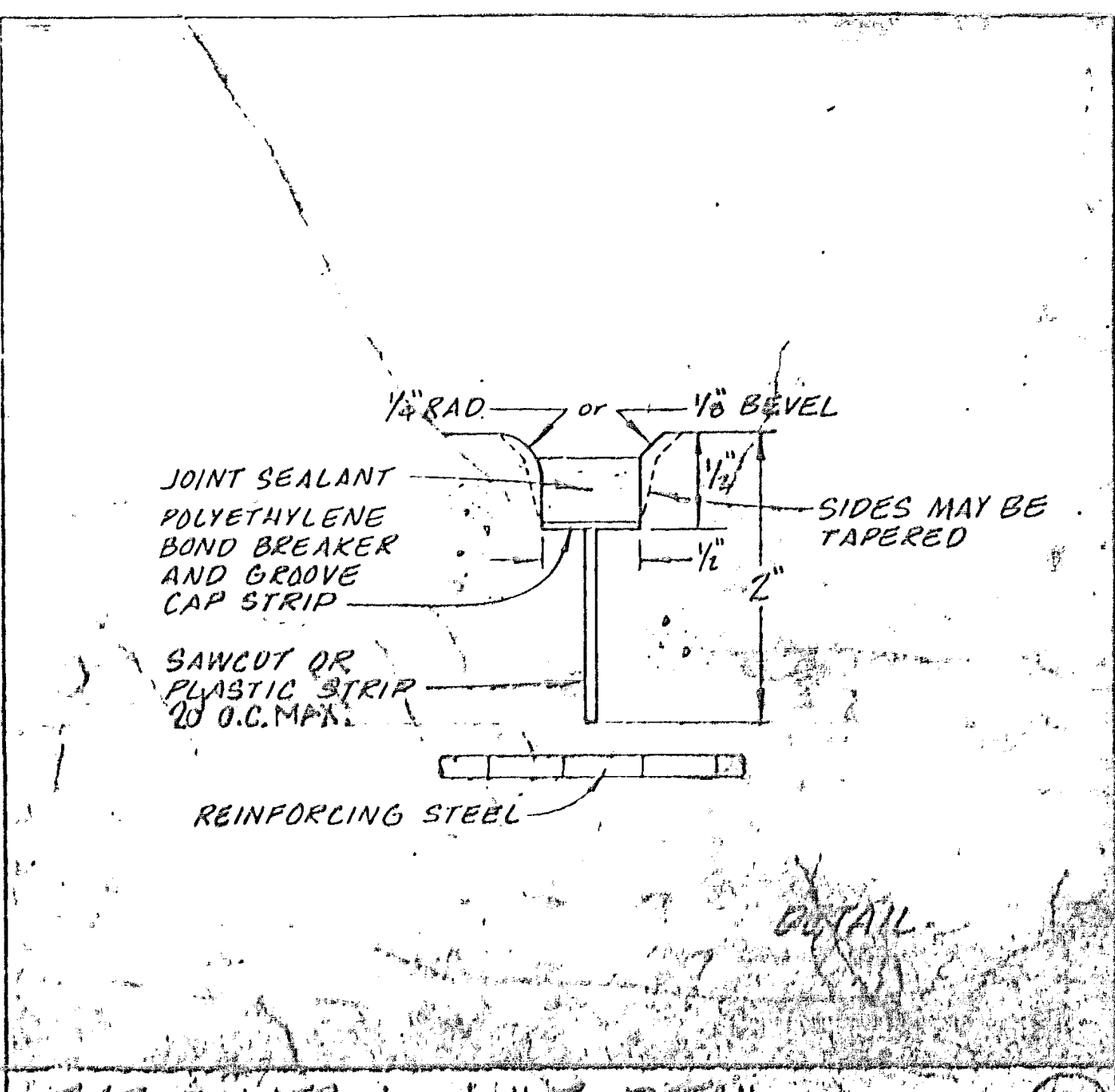
1/4" RAD. or 1/8" BEVEL
JOINT SEALANT
POLYETHYLENE BOND BREAKER AND GROOVE CAP STRIP
SAWCUT OR PLASTIC STRIP 20' O.C. MAX.
1/2"
1/2"
2"
SIDES MAY BE TAPERED
REINFORCING STEEL
DETAIL

TYP. CONTROL JOINT DETAIL (2)

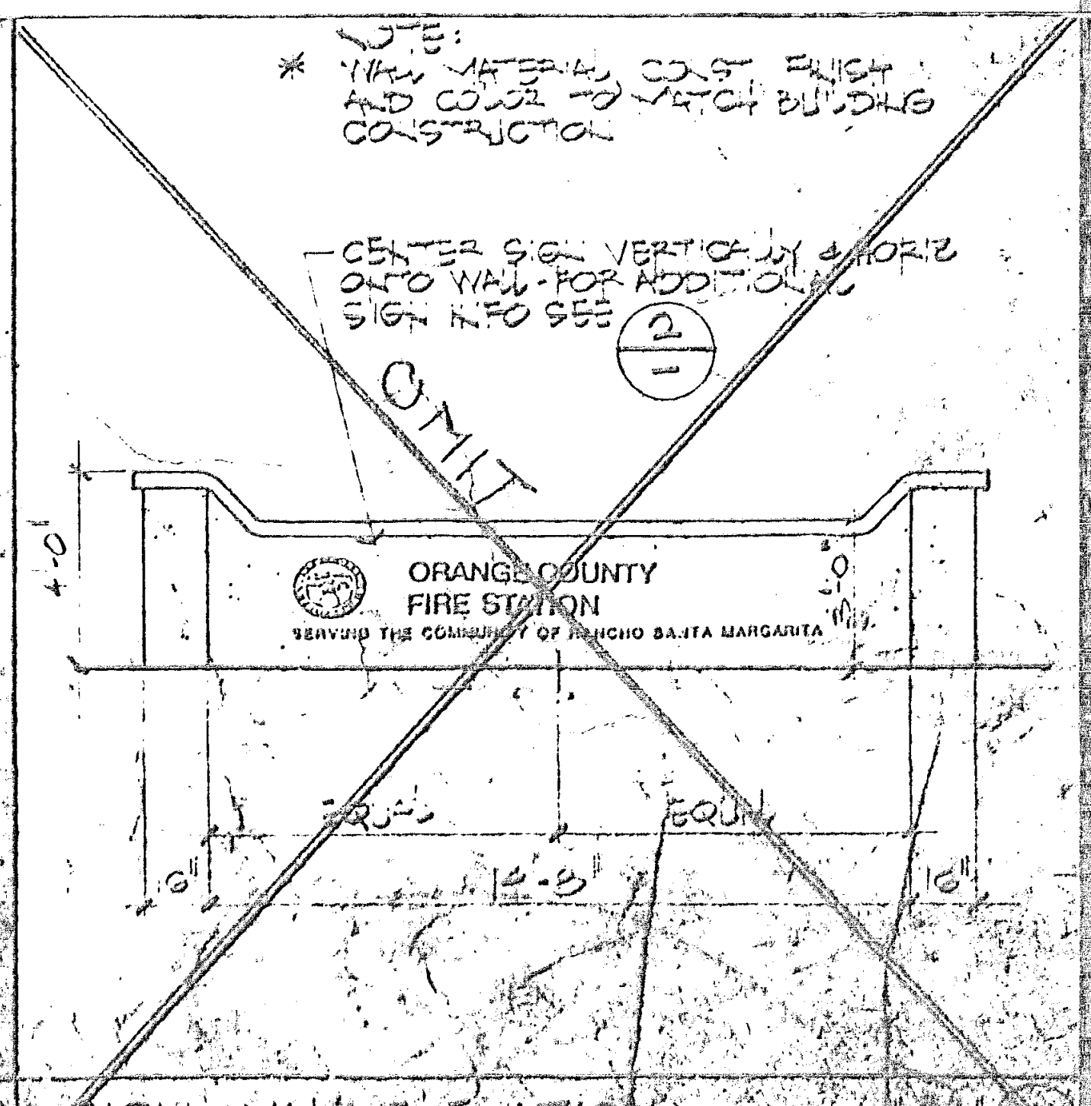
NOTE:
* WALL MATERIAL, CONST. FINISH AND COLOR TO MATCH BUILDING CONSTRUCTION
CENTER SIGN VERTICALLY & HORIZ. ONTO WALL - FOR ADDITIONAL SIGN INFO SEE 2
OMIT
ORANGE COUNTY FIRE STATION
SERVING THE COMMUNITY OF RANCHO SANTA MARGARITA
4'-0"
EQUAL
EQUAL
6"
12'-8"
16"

SIGN WALL ELEVATION

PLAN NO. 9078 [illegible]

McCULLOCH ARCHITECTS
260 Newport Center Drive
Suite 330
Newport Beach
California 92660
714 759-0141

THESE DRAWINGS REPRESENT AS-BUILT CONDITIONS TO THE BEST OF OUR KNOWLEDGE BASED UPON VISUAL INSPECTION OF THE BUILDING DURING OCTOBER, 1984.

WILLIAM C. McCULLOCH
ARCHITECT

Blumenstein

SITE PLAN

SANTA MARGARITA FIRE STATION #45
30131 AVENTURA AVENUE
RANCHO SANTA MARGARITA
SANTA MARGARITA

Project No.
Designer
Drawn by
Date 11-1-89 AS-BUILT
Scale
Revisions By Date

Sheet

SECTION D-D
SCALE 1"=3'
RETAINING WALL - SEE ARCH. PLANS FOR DETAILS (SEPARATE PERMIT REQD)
EX GROUND
SEE DETAIL "B" (SHEET 1)
CONC. BLOCK WALL PER ARCH PLANS
ROOF DRAIN THRU CURB (TYP 2 PLACES) SEE PLMBG PLANS
4" CONC/2" SAND
FF 928.20
PAD 927.7
PAD 927.2
4" CONC/6" SAND (SEE ARCH. PLANS FOR EXACT SECTION TYP)
GUTTER - SEE ARCH. PLANS
TRASH ENCLOSURE
SLIDING GATE
DAYLIGHT LINE
GRADE SWALE AS SHOWN
GRADE
DOOR
℄ GILBERTO
℄ AVENTURA
℄ TOMAS
SCALE 1" = 20'
SECTION C-C
SCALE 1"=3'
VARIES
2%
EX GROUND
SECTION A-A
SCALE 1"=3'
℄ DRAIN & SWALE
FF 928.2
3%
3 CONCRETE "U" CHANNEL DETAIL
NO SCALE
2 CONCRETE CURB DETAIL
NO SCALE
CONCRETE
A.B.
SECTION B-B
GRADED SWALE
1.0 MIN
SECTION E-E

CONSTRUCTION NOTES

- ① — CONSTRUCT 6" CONC. WITH #3 BARS @ 18" OC BOTH WAYS OVER 6" AGG. BASE
- ② — CONSTRUCT 6" CURB PER DETAIL HEREON.
- ③ — CONSTRUCT CONC. "U" CHANNEL PER DETAIL HEREON.
- ④ — CONSTRUCT 8" [illegible] DRAIN
- ⑤ — CONSTRUCT INLET TYPE I PER OCEMA STD. PLAN 301.
- ⑥ — CONSTRUCT 10" PVC DRAIN.
- ⑦ — CONSTRUCT CONC COLLAR PER OCEMA STD. PLAN 317.
- ⑧ — CONSTRUCT 4" CONC SIDEWALK.
- ⑨ — PLACE GRAVEL BAGS, 2 BAGS HIGH, EXCEPT AS NOTED
- ⑩ — CONST. 3" THICK CONC V-CHANNEL WITH 6"x6" - W1.4 x W1.4 W.W.M (SEE SECT. D-D & SECT. E-E)
- ⑪ — CONST. CONC. JUNCTION STRUCTURE PER DETAIL ON SHEET 1
- ⑮ CONST SPEE-D-BASIN NDS-20 GRATE W/NDS 100 BASIN & 8" PIPE RISER.
- ⑯ — CONST SPEE-D-BASIN NDS 20 GRATE W/NDS 250 BASIN & 8" PIPE RISER
- ⑰ CONST SPEE-D-BASIN NDS-20 GRATE W/NDS 200 BASIN & 8" PIPE RISER.
- ⑱ — CONST 4" PVC OR EQUAL DRAIN PIPE

WS WILLIAMSON and SCHMID
17782 SKY PARK BOULEVARD • IRVINE CALIFORNIA 92714 • (714) 261-2222

APPROVED BY | RCE | EXPIRES | DATE

DESIGNED BY
DRAWN BY
CHECKED BY
FIELD BOOK

GRADING & ONSITE IMPROVEMENT PLAN

SHEET 2 OF 2 SHEETS

PLAN NO. 90781-1703

JOB # 35283

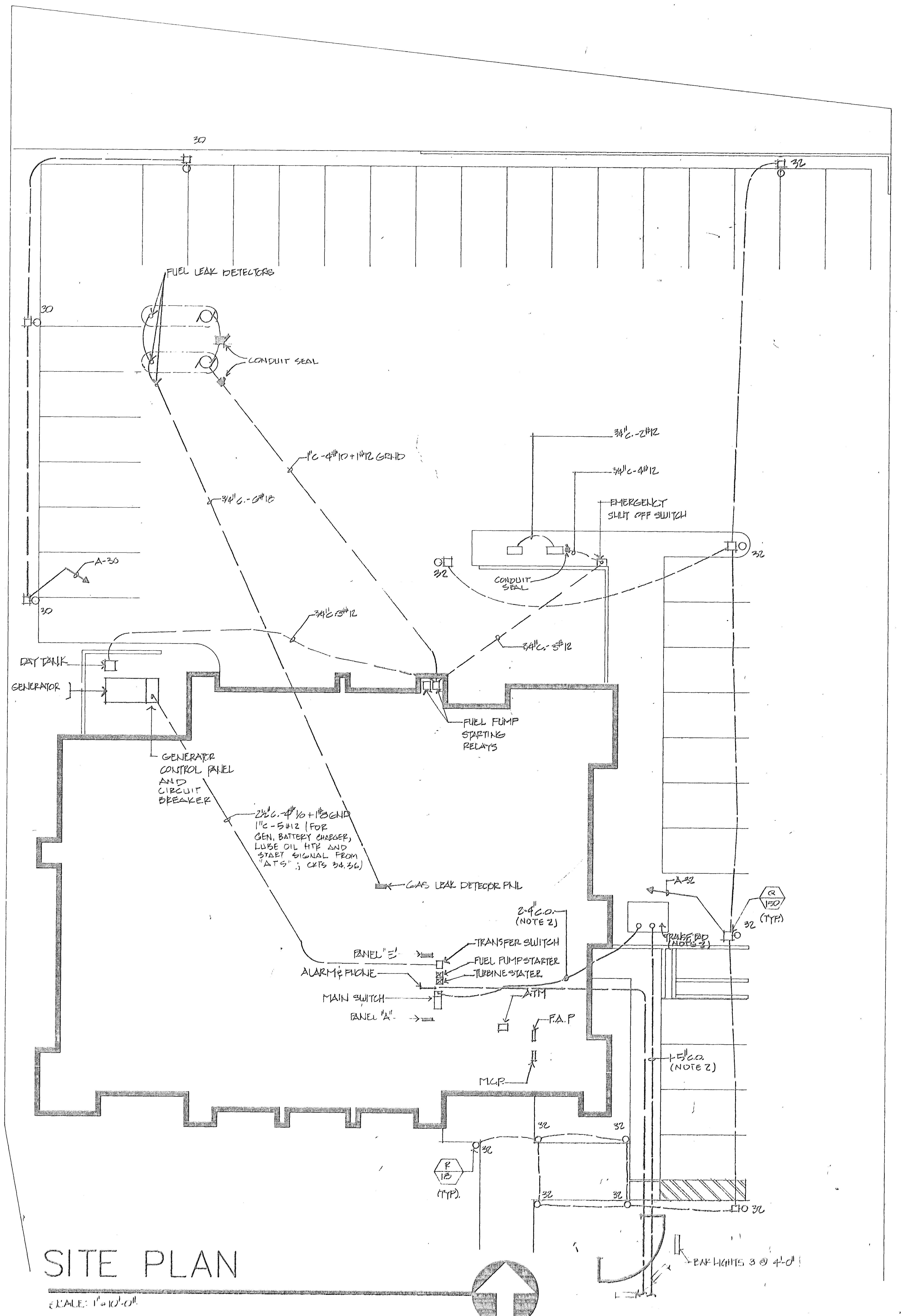
30
32
FUEL LEAK DETECTORS
CONDUIT SEAL
1"C-4#10+1#12 GRND
3/4"C-2#12
3/4"C-4#12
EMERGENCY SHUT OFF SWITCH
3/4"C-6#12
A-30
CONDUIT SEAL
3/4"C-3#12
3/4"C-5#12
DAY TANK
GENERATOR
FUEL PUMP STARTING RELAYS
GENERATOR CONTROL PANEL AND CIRCUIT BREAKER
2½"C-4#1/0+1#8GND 1"C-5#12 (FOR GEN. BATTERY CHARGER, LUBE OIL HTR AND START SIGNAL FROM "ATS"; CKTS 34,36)
GAS LEAK DETECTOR PNL
A-32
2-4"C.O. (NOTE 2)
TRANSFORMER (NOTE 2)
PANEL "E"
TRANSFER SWITCH
ALARM & PHONE
FUEL PUMP STARTER
TURBINE STARTER
MAIN SWITCH
ATM
PANEL "A"
F.A.P
1-5"C.O. (NOTE 2)
M.G.P.
Q 150 (TYP)
R 18 (TYP.)
BAR LIGHTS 3 @ 4'-0"

SITE PLAN

SCALE: 1"=10'-0"

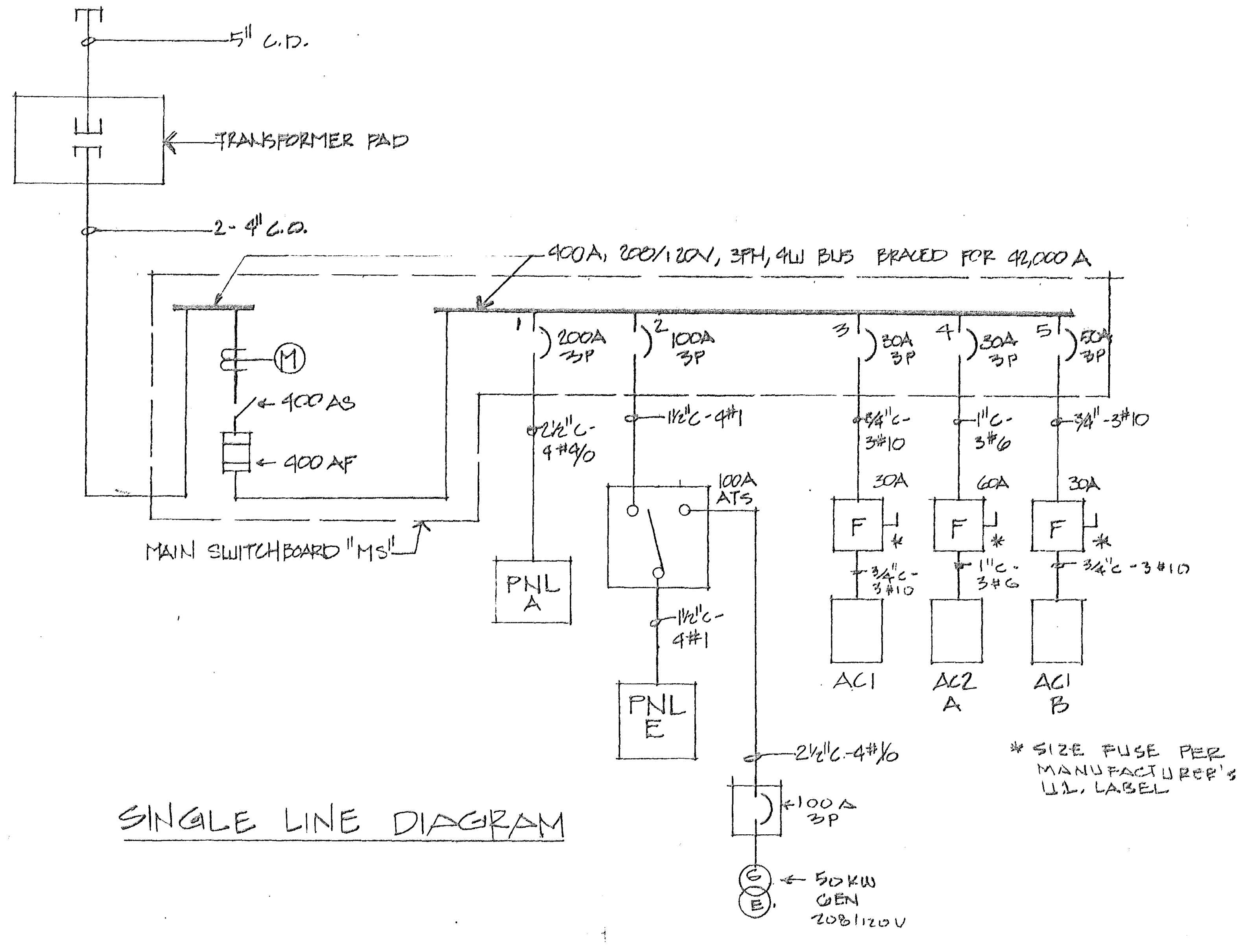
5" C.D.
TRANSFORMER PAD
2-4" C.O.
400A, 208/120V, 3PH, 4W BUS BRACED FOR 42,000 A
M
400 AS
400 AF
MAIN SWITCHBOARD "MS"
1 200A 3P
2 100A 3P
3 30A 3P
4 30A 3P
5 30A 3P
2½"C-4#1/0
1¼"C-4#1
3/4"C-3#10
1"C-3#6
3/4"C-3#10
100A ATS
30A
60A
30A
F
*
PNL A
PNL E
1¼"C-4#1
AC1
AC2 A
AC1 B
3/4"C-3#10
1"C-3#6
3/4"C-3#10
2½"C-4#1/0
100A 3P
G E
50KW GEN 208/120V
* SIZE FUSE PER MANUFACTURER'S U.L. LABEL

SINGLE LINE DIAGRAM

VOLTAGE 208/120
PHASE 3 WIRE 4
BUS AMPS 225

PANEL A
MAIN AMPS M.L.O.

LOCATION ELECT. RM
MOUNTING SURFACE
DWG. NO.

DESCRIPTION	REC	LTG	VOLT AMPS A	VOLT AMPS B	VOLT AMPS C	BRKR AMP	BRKR P	CKT NO.	BUS CONN.	CKT NO.	BRKR P	BRKR AMP	VOLT AMPS A	VOLT AMPS B	VOLT AMPS C	LTG	REC	DESCRIPTION
RMS 2,3,4	6		1080			20	1	1		2	1	20	360				2	PATIO, ROOF
RMS 5,6	6			1080				3		4				540			3	RMS 11,26
RMS 6,9	5				900			5		6					750		1	DRINKING FT.
RMS 5,7,ROOF	3		540					7		8			800				2	WORK BENCH
RMS 14,1	5			900				9		10				800			2	WORK BENCH
RMS 2	4				720			11		12					900		1	DISHWASHER
RMS 17,16	7		1260					13		14			900				1	GRINDER
RMS 17,16		6		600				15		16				360			2	RM 12
RMS 14,32	4				720			17		18					1000		1	RANGE
SPARE			500					19		20			900				1	HOOD
RMS 17 16	6			1080				21		22				1000			1	MICROWAVE
RM 19	6				1080			23		24					1244	9		LIGHTS
RMS 18,20,ROOF,IRR	5		900					25		26			1445			14		
OUTDOOR		12		1200				27		28				1387		10		↓
OUTDOOR		11			1100			29		30					450		3	PARKING LOT
APPARATUS		7	1820					31		32			840				10	PARKING LOT
		7		1820				33		34				500				GEN BATT
↓		4			1040			35		36					500			GEN HTR
RM 16,17		13	1185					37		38			120					IRRIGATION
RM 22,21,[illegible]		11		758				39		40				240				SIGN LTS
SPARE					500	↓	↓	41		42	↓	↓			500			SPARE
TOTALS			7,218	7,438	6,060								5365	4827	5344			

VOLT AMPS: BUS A 12,583
BUS B 12,265
BUS C 11,404
TOTAL 36,252

DEMAND FACTOR 100% X LCL KVA 36.25 X 1.25= 45.31
DEMAND FACTOR ____ X NON LCL KVA ____ = —
TOTAL KVA 45.31
3Ø AMPS 126

TIMER

VOLTAGE 208/120
PHASE 3 WIRE 4
BUS AMPS 125

PANEL E
MAIN AMPS 100A CB

LOCATION TELEPHONE RM
MOUNTING SURFACE
DWG. NO.

DESCRIPTION	REC	LTG	VOLT AMPS A	VOLT AMPS B	VOLT AMPS C	BRKR AMP	BRKR P	CKT NO.	BUS CONN.	CKT NO.	BRKR P	BRKR AMP	VOLT AMPS A	VOLT AMPS B	VOLT AMPS C	LTG	REC	DESCRIPTION
REMOTE RADIO	1		300			20	1	1		2	3	40	2000					AIR COMPR.
RMS 16,20	2			600				3		4	-	—		2000				
COMPUTER	1				200			5		6	-	—			2000			↓
COMPUTER	1		200					7		8	1	20	1000					MCP
COMPUTER	1			200				9		10				500				SPACE
COMPUTER	1				200			11		12					750			REFRIG
BATTERY CHARG	1		400					13		14			750					FREEZER
RMS 8	3			600				15		16				750				REFRIG
RMS 6 RR,12,A,9,12,8,3,14		10			1420			17		18					1000			TELE. BACKBOARD
RMS 20,17,16		4	244					19		20			850					FUEL LEAK DET
SPARE				500				21		22	↓	↓		500				SPACE
↓					500			23		24	2	20			800			DIESEL TURB
DOOR #3			600					25		26	-	—	800					↓
SPARE				500				27		28	2	20		800				GAS TURB
GATE MOTOR					1080			29		30	-	-			800			↓
SPRINKLER BELL			120					31		32	3	20	600					DOOR #1
HEATERS				1056				33		34	-	-		600				DOOR #2
ROOM FAN					828	↓	↓	35		36	-	-						SPACE
SPACE						—	-	37		38	3	20	3100					DOOR #4 + #5
						—	-	39		40	-	-		3100				
↓						—	-	41		42	-	-			3100			↓
TOTALS			1964	3456	4228								5760	5510	5710			

VOLT AMPS: BUS A 7724
BUS B 8966
BUS C 9938
TOTAL 26628

DEMAND FACTOR 100% X LCL KVA 26.63 X 1.25= 33.28
DEMAND FACTOR ____ X NON LCL KVA ____ = —
TOTAL KVA 33.28
3Ø AMPS 92.39

GENERAL NOTES:

1. UTILITY COMPANIES REPRESENTIVES:
   A. SOUTHERN CALIFORNIA EDISON CO.
   SERVICE PLANNER:
   PHONE:
2. INCOMING SERVICE SHALL BE PER SERVICE UTILITIES COMPANY REQUIREMENTS.
3. CONTRACTOR SHALL CONTACT UTILITY COMPANY FOR APPROVED ENGINEERING DRAWINGS BEFORE CONSTRUCTION.
4. ALL CONDUITS (C.O.) TO BE EQUIPPED WITH POLY PULL LINE.
5. MINIMUM, EARTH COVER OVER ANY SCE SERVICE CONDUITS TO BE 30".
6. PROVIDE 24" MINIMUM EARTH COVER FOR TELEPHONE CONDUITS.
7. PROVIDE 12" OF COMPACT OR 3" OF CONCRETE IN BETWEEN POWER AND TELEPHONE CONDUITS LOCATED IN COMMON TRENCH.
8. THE ELECTRIAL CONTRACTOR SHALL CHECK WITH OTHERS TRADES AND ARCHITECT FOR LOCATION OF EQUIPMENT PROVIDED BY OTHERS AND COORDINATE INSTALLATION OF ELECTRICAL EQUIPMENT.
9. THE ELECTRICAL CONTRACTOR SHALL SECURE CONTROL WIRING DIAGRAM FROM SUCCESSFUL MECHANICAL EQUIPMENT CONTRACTOR AND PROVIDE ALL NECESSARY WIRING ACCORDINGLY.
10. ALL ELECTRICAL ITEMS INSTALLED AT GAS PUMPS SHALL BE EXPLOSION PROOF (CLASS I, DIV I) AS NOTED IN NEC 500-503.
11. IN EVENT OF CONFLICT OR INCONSISTANCIES BETWEEN ITEMS CALLED OUT ON THE PLANS, SPECIFICATION OR CONFLICTS WITH CODE REQUIREMENTS APPLYING TO THE SAME MATTER THE HIGHER STANDARD SHALL APPLY.
12. ALL PENETRATIONS IN FIRE RATED SURFACES SHALL BE PROVIDED WITH NON-COMBUSTIBLE MATERIAL OF FIRE RATING OR EQUAL TO THE MATERIAL PENETRATED.

THESE DRAWINGS REPRESENT AS-BUILT CONDITIONS TO THE BEST OF OUR KNOWLEDGE BASED UPON VISUAL INSPECTION OF THE BUILDING DURING OCTOBER 1989.

WILLIAM C. MCCULLOCH
ARCHITECT

Project No.
Designer
Drawn by
Date 11-1-89 AS-BUILT
Scale
Revisions By Date

Sheet
of Sheets

#90159-80

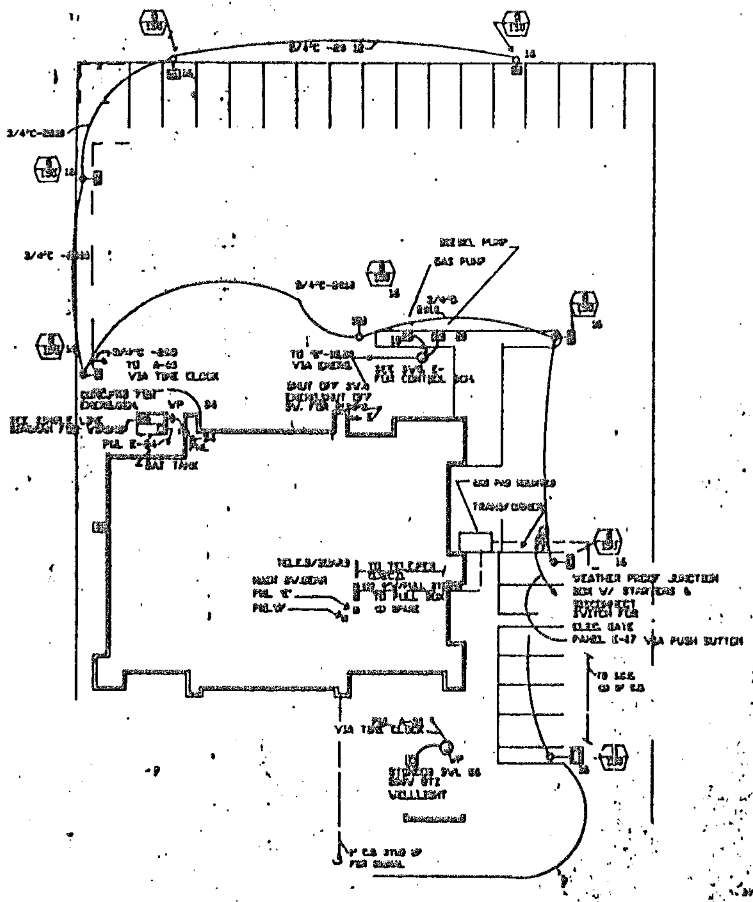
DIESEL PUMP
GAS PUMP
3/4"C -2#10
3/4"C
TRANSFORMER
WEATHER PROOF JUNCTION BOX W/ STARTERS & DISCONNECT SWITCH FOR ELEC. GATE
PANEL E-47 VIA PUSH SWITCH
VIA TIME CLOCK
GAS TANK
WELLSIGHT

SITE PLAN

SCALE

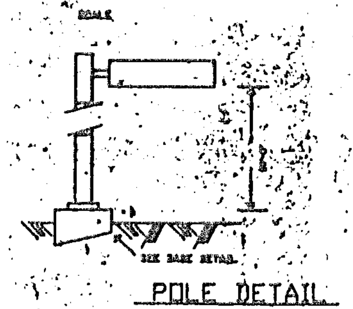
SEE BASE DETAIL

POLE DETAIL

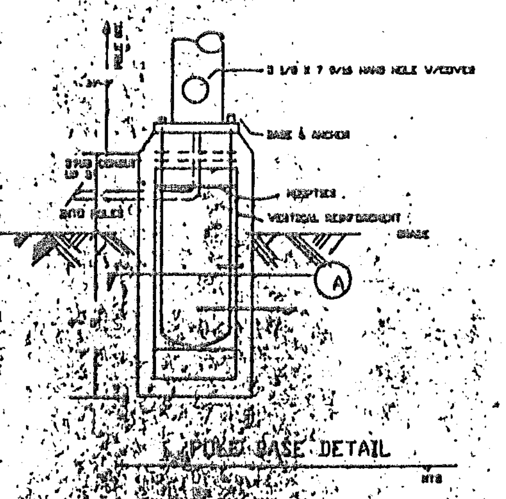
3 1/8 X 7 9/16 HAND HOLE W/COVER
BASE & ANCHOR
HOOPTIES
VERTICAL REINFORCEMENT
GRADE
A
NTS

POLE BASE DETAIL

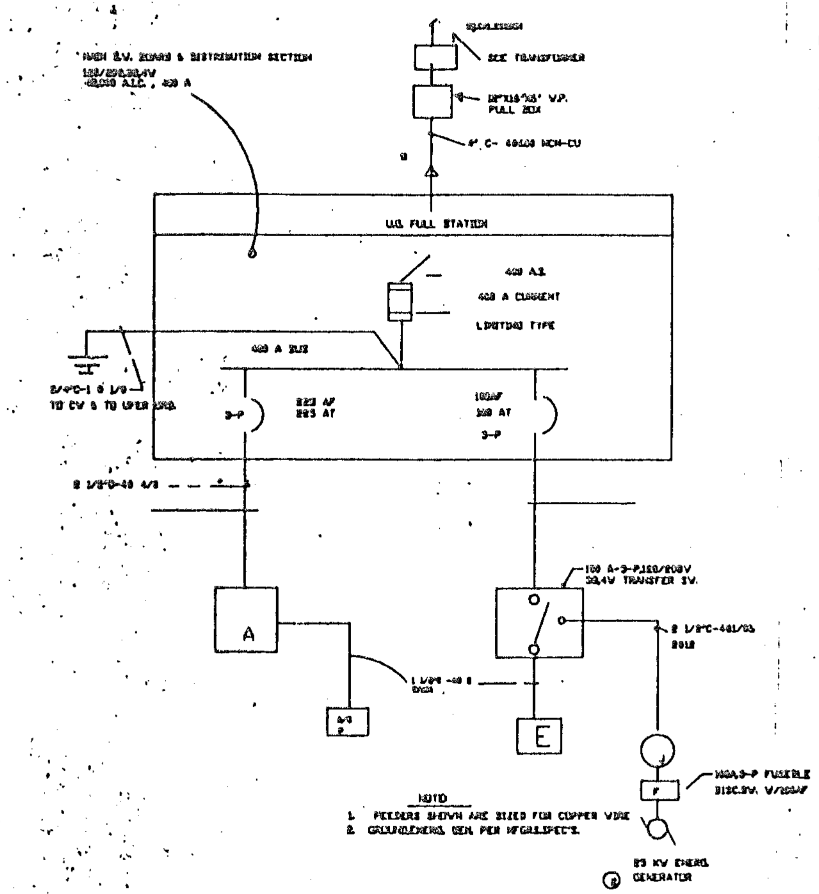
SCE TRANSFORMER
V.P. PULL BOX
4" C- 4#400 MCM-CU
MAIN S.V. BOARD & DISTRIBUTION SECTION
120/208,3Ø,4V
400 A
U.G. PULL STATION
400 A.S.
400 A CURRENT
LIMITING TYPE
400 A BUS
3-P
225 AT
100AF
100 AT
3-P
TO CV & TO UPPER LEVEL
A
100 A-3-P,120/208V 3Ø,4V TRANSFER SW.
E
FUSIBLE DISC.SW.
KV EMERG. GENERATOR
NOTE
1. FEEDERS SHOWN ARE SIZED FOR COPPER WIRE
2. GROUNDING PER MFGR.SPEC'S.

SINGLE LINE DIAGRAM

GENERAL NOTES :

UTILITY COMPANIES REPS.
A. SOUTHERN CALIFORNIA EDISON CO.
SERVICE PLANNER OFFICER [illegible]
PHONE [illegible]
B. PACIFIC BELL CO.

SERVICE PLANNER OFFICER
PHONE

GSA / COMMUNICATIONS

2. INCOMING SERVICE SHALL BE PER SERVICE UTILITIES CO. REQUIREMENTS.
3. CONTRACTOR SHALL CONTACT UTILITY CO. FOR APPROVED ENG. DRAWINGS BEFORE CONSTRUCTION
4. ALL CONDUITS(C.O.) TO BE EQUIPPED WITH POLY PULL LINE
5. MIN. EARTH COVER OVER ANY SCE SERVICE CONDUITS BE 30"
6. PROVIDE 24" MIN. EARTH COVER FOR TELEPHONE CONDUITS
7. PROVIDE 12" OF COMPACT OR 3" OF CONCRETE IN BETWEEN POWER & TELEPHONE CONDUITS LOCATED IN COMMON TRENCH
8. TELEPHONE CO. REPS.

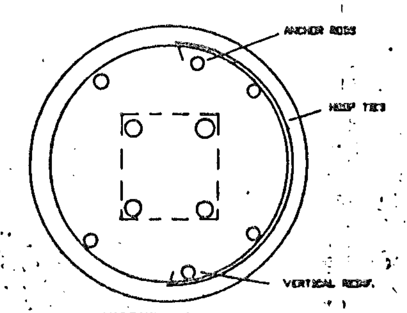
ANCHOR RODS
HOOP TIES
VERTICAL REINF.

SECTION A

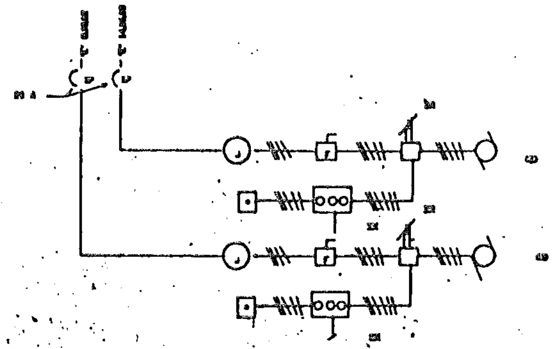

DOOR CONTROL WIRING DIAGRAM.

[illegible]

APPROVAL OF ELECTRICAL PLANS

The proposed installation of power and lighting as submitted upon your plans have been reviewed and found to meet the minimum requirements of the Electrical Ordinance. This approval does not constitute authority to violate any provisions of said Ordinance nor shall it prevent further correction of errors found in the plans.

Checked By: ____________

____
Date

C. [illegible]
Electrical Inspector

SEP 1 8 1989
ORANGE COUNTY
Development Services

ELECTRICAL SITE PLAN

Project No.
Designer
Drawn By
Date
Scale

#99159-60

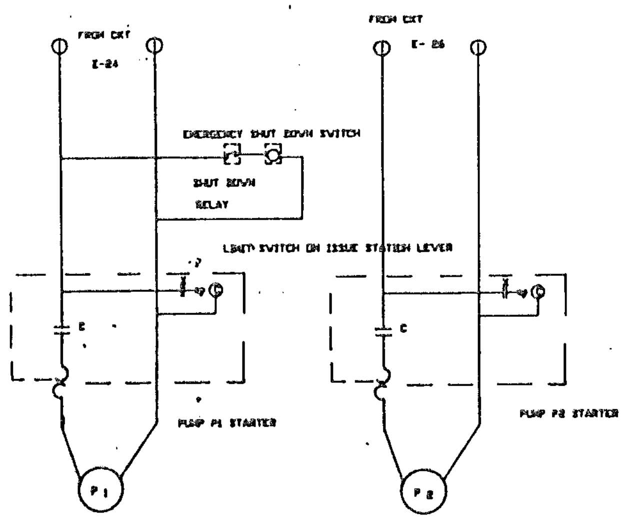
FROM CKT
E-24
FROM CKT
E-26
EMERGENCY SHUT DOWN SWITCH
SHUT DOWN
RELAY
LIMIT SWITCH ON ISSUE STATION LEVER
C
C
PUMP P1 STARTER
PUMP P2 STARTER
P1
P2

FUEL PUMPS EMERGENCY SHUT DOWN CONTROL DIAGRAM

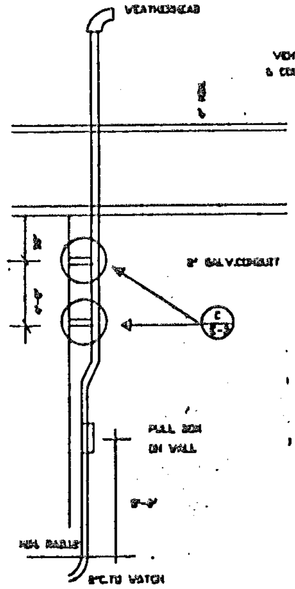
WEATHERHEAD
VENT TYPE FLASHING
& COUNTER FLASHING
ROOF
3" GALV.CONDUIT
C
E-3
PULL BOX
ON WALL
9'-0"
MIN. RADIUS
3"C.TO WATCH

ANTENNA INSTALLATION

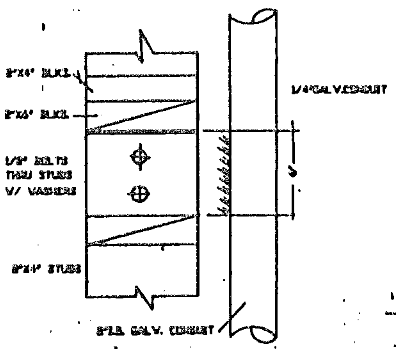
2"X4" BLKS.
2"X6" BLKS.
1/2" BOLTS
THRU STUDS
W/ WASHERS
2"X4" STUDS
1/4"GALV.CONDUIT
3"I.D. GALV. CONDUIT

DETAIL

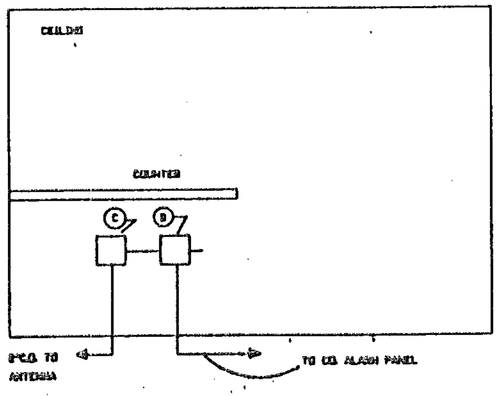
CEILING
COUNTER
C
B
3"C.O. TO
ANTENNA
TO CO. ALARM PANEL

'NORTH WALL WATCH RM.

NTS

B
E-3

VOLTAGE 120/208v,
PHASE 3 , 4w
FEED 183 A

18 SPACES
PANEL A/CP
MAIN AMPS

MOUNTING
LOCATION ELEC.ROOM
DWG. NO.

DESCRIPTION	REC.	LTG.	MISC.	VOLTAGE AMPS			BRKR		CKT NO.	BUS CONN. A B C	CKT NO.	BRKR		VOLTAGE AMPS			REC.	LTG.	DESCRIPTION
				A	B	C	AMP	P				AMP	P	A	B	C			
AC- 1				2300			30	3	1		2	70	3	3730					A/C -2
AC- 1					2300		30	3	3		4	70	3		3730				A/C -2
AC- 1						2300	30	3	5		6	70	3			3730			A/C -2
AC- 1				2300			30	3	7		8								
AC- 1					2300		30	3	9		10								
AC- 1						2300	30	3	11		12								
									13		14								
									15		16								
									17		18								
									19		20								
									21		22								
									23		24								
									25		26								
									27		28								
									29		30								
									31		32								
									33		34								
									35		36								
									37		38								
									39		40								
									41		42								
				4600	4600	4600				18,350				3730	3730	3730			

TOTAL WATTS 31050+ LCL = 30362 = 98 FLA

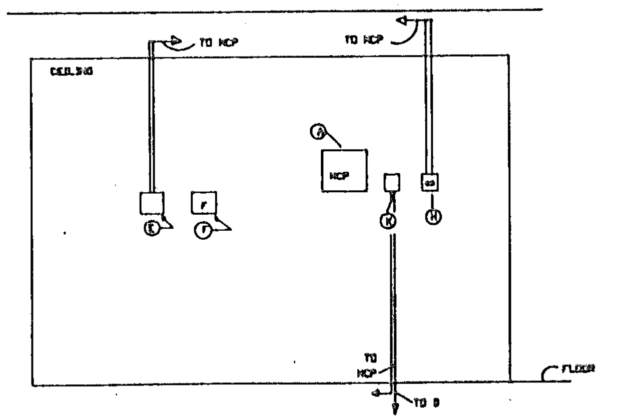
TO MCP
TO MCP
CEILING
A
MCP
F
E
F
K
H
TO
MCP
TO B
FLOOR

EAST WALL WATCH ROOM

NTS.

A
E-3

Ⓐ MASTER CONTROL PANEL "MCP 18"X24"X6" D
Ⓑ TWO GANG BOX W/ BLANK COVER PLATE(FOR RELAY SWITCHING BY COUNTY)
Ⓒ TWO GANG BOX W/ COVER PLATE FOR PA SYSTEM (RADIO)
NIPPLE 1"C INTO B
Ⓔ REMOTE LAMP PANEL
Ⓕ MANUAL FIRE STATION
Ⓗ FOUR GANG BOX FOR DOOR OPERATOR PUSH BUTTON (OPEN ONLY)
FURNISHED BY ELEC. CONTRACTOR
Ⓚ 6"X8"X4" D J-BOX FOR COUNTY ALARM

FILE
SEP 1 8 1998
ORANGE COUNTY
Development Services

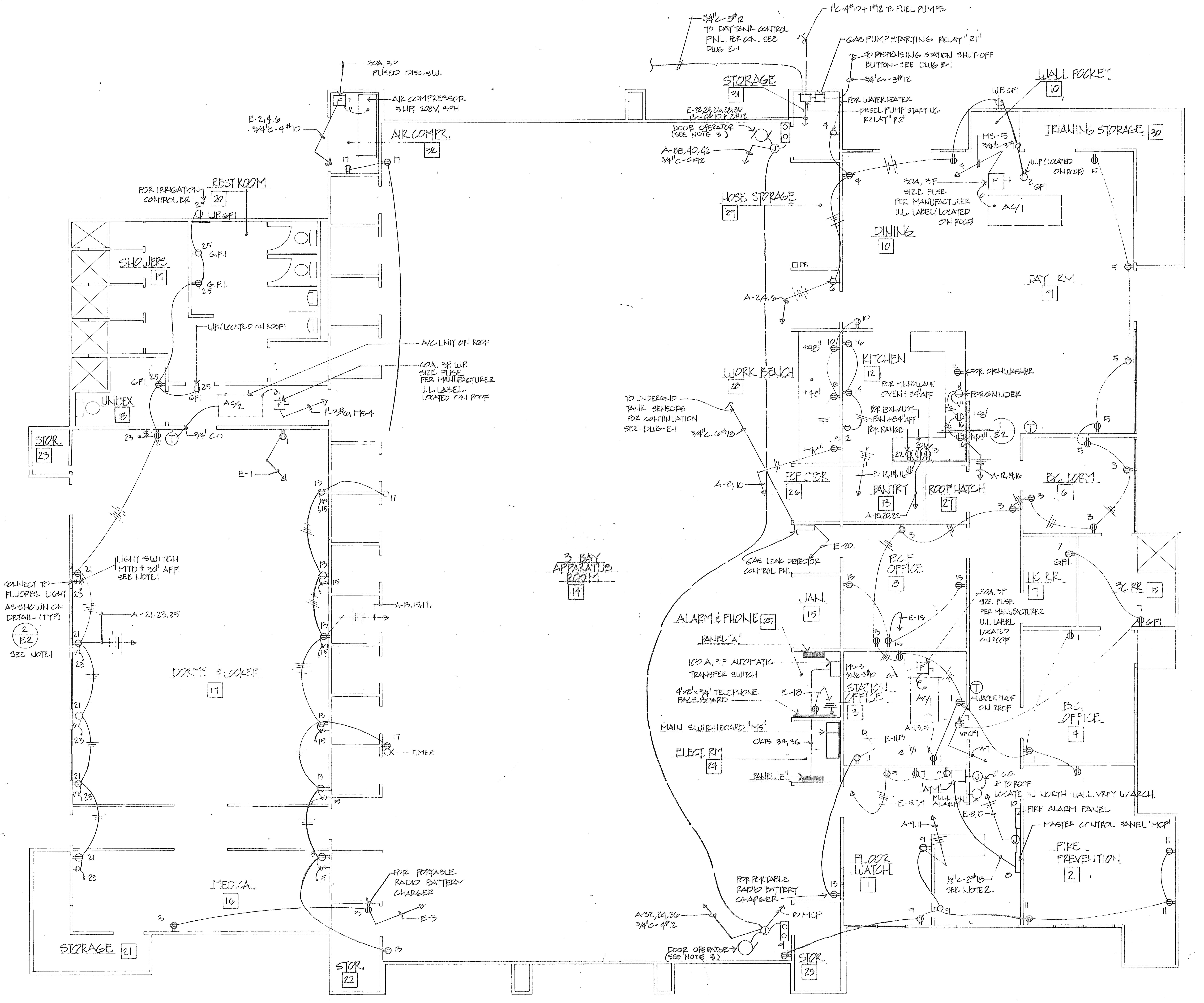
3/4"C-3#12 TO DAY TANK CONTROL PNL. FOR CON. SEE DWG E-1
1"C-4#10+1#12 TO FUEL PUMPS
GAS PUMP STARTING RELAY "R1"
TO DISPENSING STATION SHUT-OFF BUTTON - SEE DWG E-1
3/4"C.-3#12
FOR WATER HEATER
DIESEL PUMP STARTING RELAY "R2"
STORAGE 31
E-22,24,26,28,30. 1"C-4#10+2#12
DOOR OPERATOR (SEE NOTE 3)
A-38,40,42 3/4"C-4#12
HOSE STORAGE 29
DF.
WALL POCKET 10
W.P. GFI
MS-5 3/4"C-3#10
W.P. (LOCATED ON ROOF)
GFI
TRIANING STORAGE 30
30A, 3P SIZE FUSE PER MANUFACTURER U.L. LABEL (LOCATED ON ROOF)
AC/1
DINING 10
DAY RM 9
30A, 3P FUSED DISC. SW.
AIR COMPRESSOR 5HP, 208V, 3PH
E-2,4,6 3/4"C-4#10
AIR COMPR. 32
FOR IRRIGATION CONTROLER
REST ROOM 20
W.P. GFI
G.F.I.
SHOWERS 19
W.P. (LOCATED ON ROOF)
A/C UNIT ON ROOF
60A, 3P, W.P. SIZE FUSE PER MANUFACTURER U.L. LABEL. LOCATED ON ROOF
AC/2
1"-3#6, MS-4
3/4" C.O.
UNISEX 18
STOR. 23
E-1
A-2,4,6
KITCHEN 12
+48"
FOR DISHWASHER
FOR GRINDER
FOR MICROWAVE OVEN +84" AFF
FOR EXHAUST FAN +84" AFF
FOR RANGE
1 E2
WORK BENCH 28
TO UNDERGND TANK SENSORS FOR CONTINUATION SEE DWG E-1
3/4"C. 6#18
A-8,10
PCF STOR 26
E-12,14,16
PANTRY 13
A-18,20,22
ROOF HATCH 27
A-12,14,16
B.C. DORM 6
E-20.
GAS LEAK DETECTOR CONTROL PNL
P.C.F OFFICE 8
JAN. 15
E-15
30A, 3P SIZE FUSE PER MANUFACTURER U.L. LABEL LOCATED ON ROOF
HC RR 7
G.F.I.
B.C. RR 5
GFI
ALARM & PHONE 25
PANEL "A"
100 A, 3 P AUTOMATIC TRANSFER SWITCH
4'x8'x3/4" TELEPHONE FACE BOARD
E-18
MS-3 3/4"C-3#10
STATION OFFICE 3
AC/1
WATERPROOF ON ROOF
VP GFI
A-1,3,5
A-7
MAIN SWITCHBOARD "MS"
CKTS 34,36
ELECT. RM 24
E-11,13
PANEL "E"
'ATM'
PULL-DN ALARM
E-5,7,9
2" C.O. UP TO ROOF LOCATE IN NORTH WALL. VRFY W/ARCH.
E-8,10
FIRE ALARM PANEL
MASTER CONTROL PANEL 'MCP'
B.C. OFFICE 4
A-9,11
1/2"C-2#18 SEE NOTE 2.
FLOOR WATCH 1
FIRE PREVENTION 2
FOR PORTABLE RADIO BATTERY CHARGER
A-32,34,36 3/4"C-4#12
TO MCP
DOOR OPERATOR (SEE NOTE 3)
STOR. 23
LIGHT SWITCH MTD +30" AFF. SEE NOTE 1
CONNECT TO FLUORES. LIGHT AS SHOWN ON DETAIL (TYP) 2 E2 SEE NOTE 1
A-21,23,25
A-13,15,17,
3 BAY APPARATUS ROOM 14
DORMS & LOCKER 17
TIMER
MEDICAL 16
FOR PORTABLE RADIO BATTERY CHARGER
E-3
STORAGE 21
STOR. 22

POWER PLAN

SCALE: 1/4" = 1'-0"

NOTES:

1. ELECTRICAL CONTRACTOR TO COORDINATE LOCATION OF RECEPTACLE LIGHT SWITCH AND LIGHT FIXTURE WITH FURNITURE LAYOUT AND CABINET WORK. SEE DWG A-9 FOR REFERENCE
2. INTERLOCK FROM REMOTE SIGNAL RELAY TO MCP RELAY "RR" SEE CONTROL DIAGRAM ON DWG E-5.

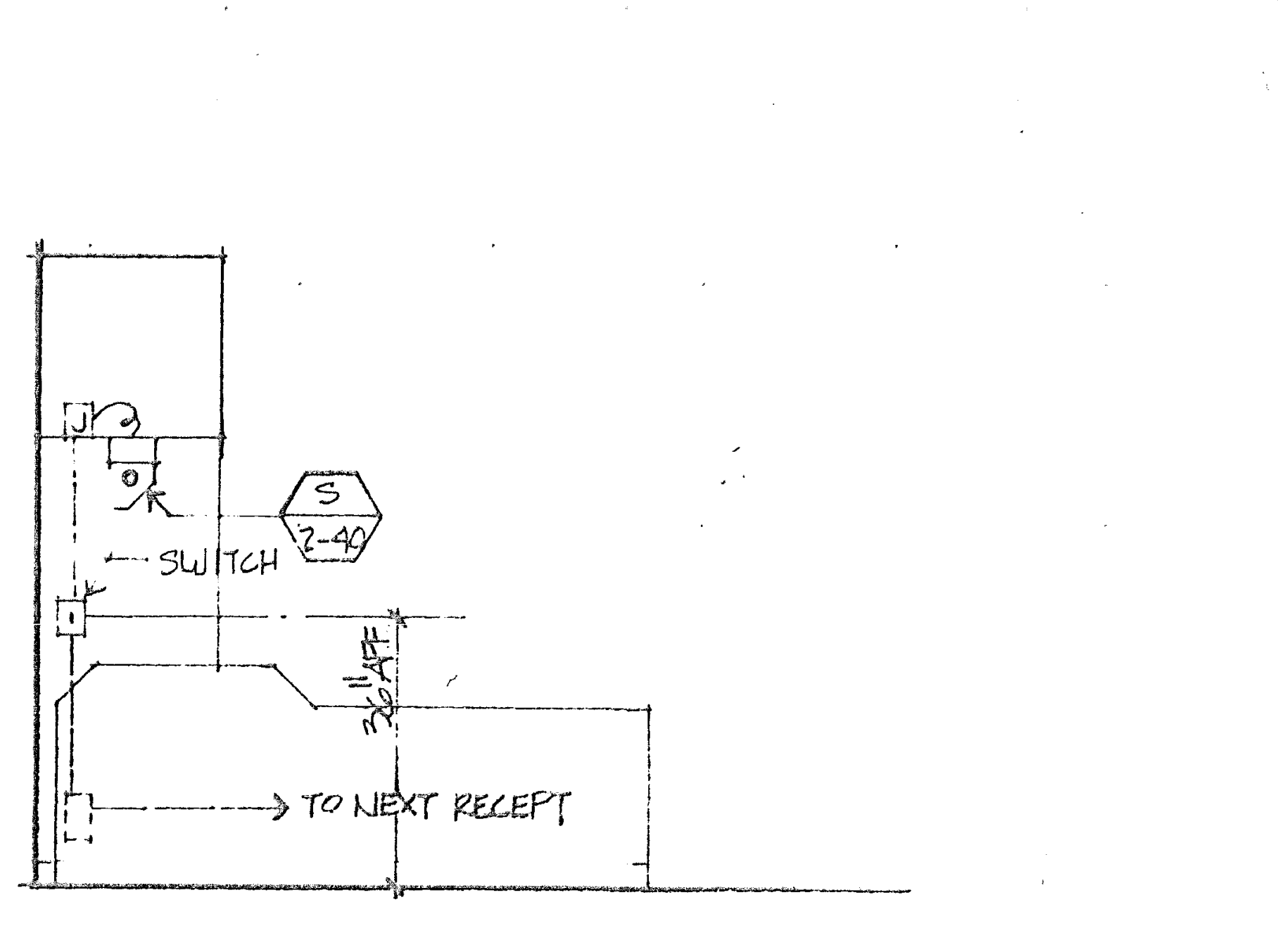
SWITCH
S 2-40
36" AFF
TO NEXT RECEPT

LIGHT FIXTURE @ MODULAR BUNK (2)

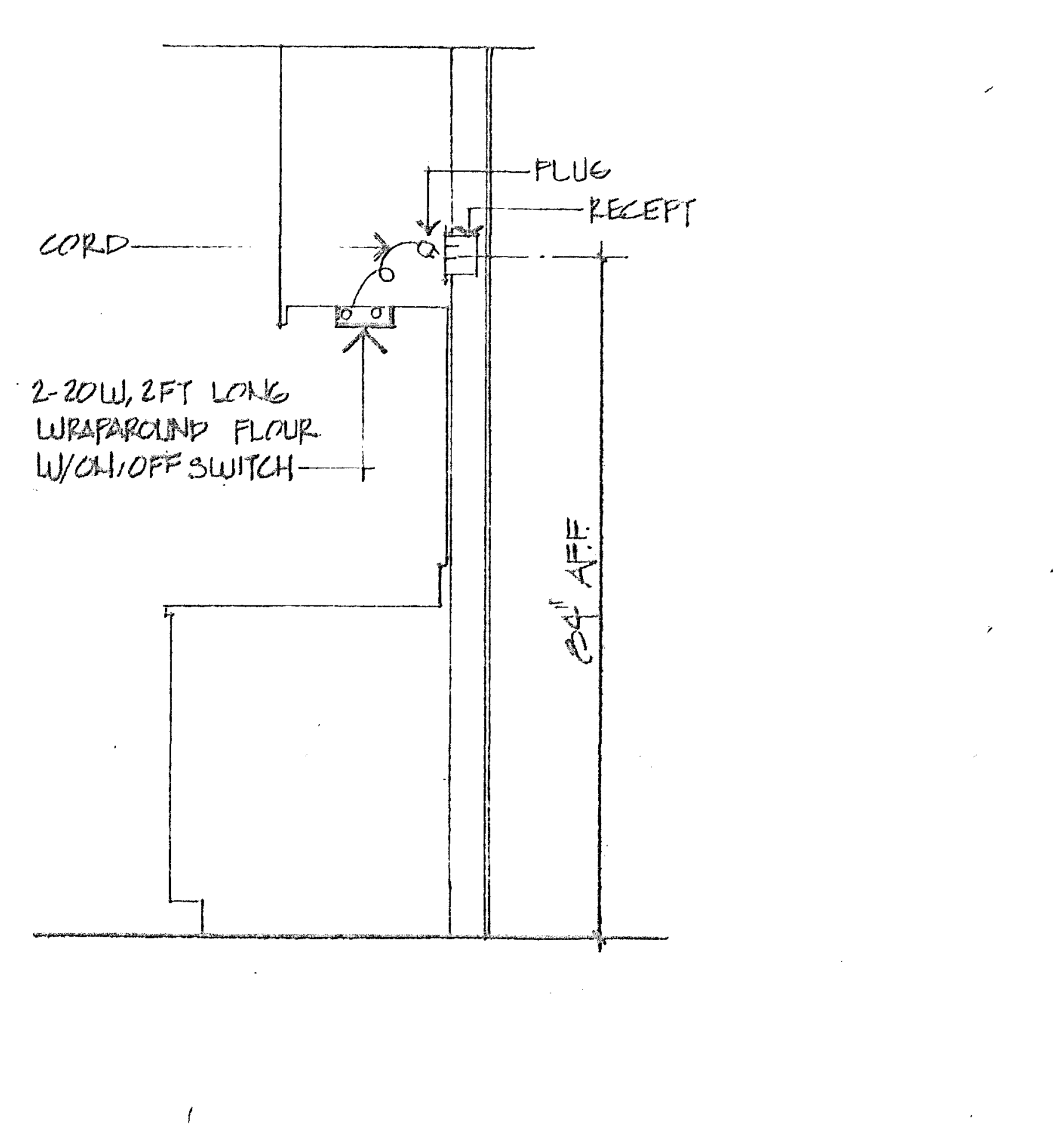
PLUG
RECEPT
CORD
2-20W, 2FT LONG WRAPAROUND FLOUR W/ON/OFF SWITCH
84" AFF.

KITCHEN CABINETRY LIGHTING FIXTURE (1)

MCCULLOCH ARCHITECTS
260 Newport Center Drive
Suite 330
Newport Beach
California
714/759-

THESE DRAWINGS REPRESENT AS-BUILT CONDITIONS TO THE BEST OF OUR KNOWLEDGE BASED UPON VISUAL INSPECTION OF THE BUILDING DURING OCTOBER, 1989.
WILLIAM C. MCCULLOCH
ARCHITECT

SANTA MARGARITA FIRE STATION #45

Project No.
Designer
Drawn by
Date 11-1-89 AS-BUILT
Scale
Revisions By Date

Sheet E-2 of Sheets

PLAN NO. 90781-1703

#90159-90

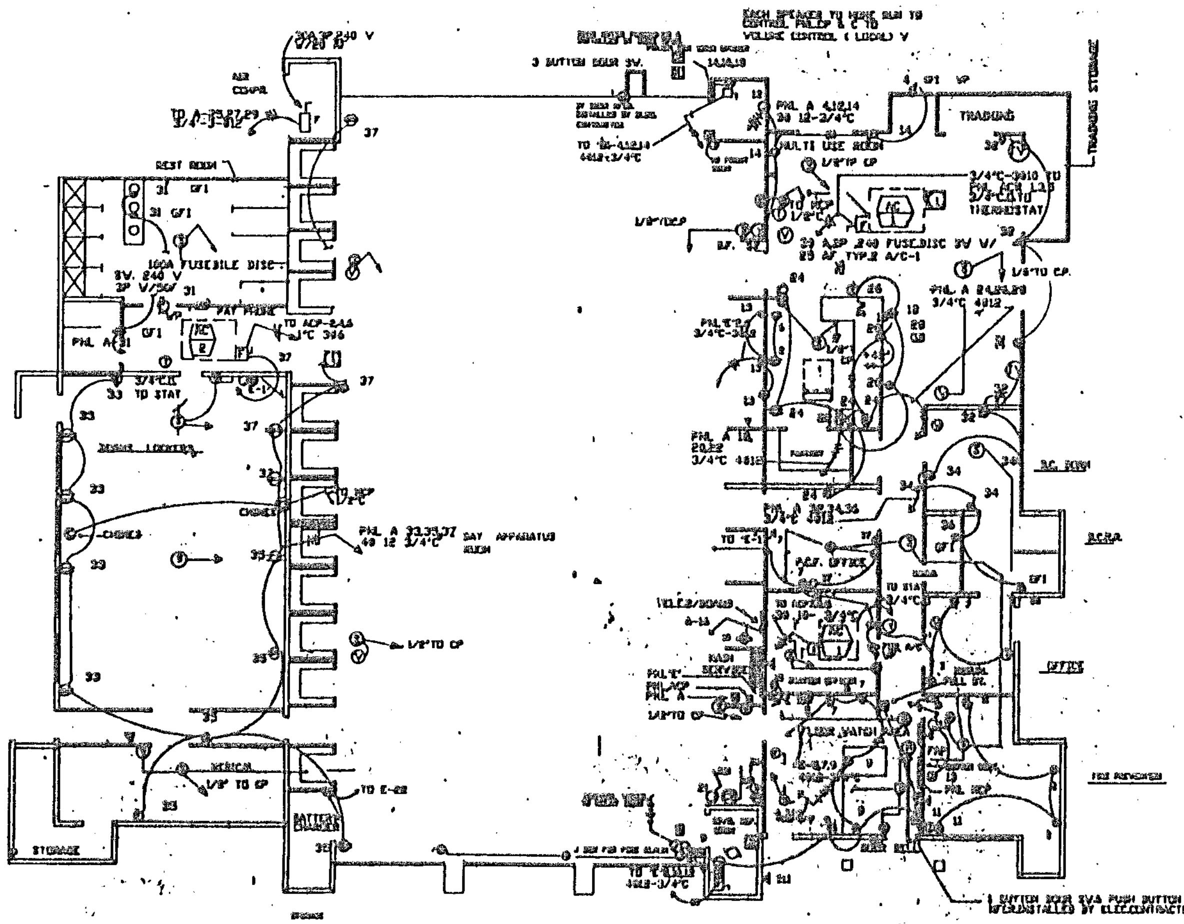

POWER PLAN

SCALE 1/8"=1'-0"

1 BUTTON DOOR SW.& PUSH BUTTON ST. BY DOOR MFGR.INSTALLED BY ELEC.CONTRACTOR TO MCP. 2

NOTES:

1. FOR EXACT LOCATION OF AC UNITS & CONTROL WIRING REFER TO MECHANICAL PLANS
   ALL A/C UNITS TO BE FURNISH WITH STARTERS
2. INSTALL DOOR OPENER BY MANUFACTURER SPEC. & INSTRUCTIONS.PROVIDE & INSTALL ALL POWER & DEVICE NECESSARY FOR COMPLETE SYSTEM
3. FRONT DOOR WILL BE OPENED BY THE CAPTAIN OFFICE OR BY THE BLACK DOOR.THE FRONT DOOR.BY RADIO CONTROL AND BY COMMUNICATION SYSTEM
4. REAR DOOR WILL BE OPENED BY THE FRONT DOOR OR BY THE CAPITAN OFFICE. (BOTH DOORS CAN BE CLOSED BY THE DOOR) FRONT DOOR WILL BE OPENED & CLOSED BY RADIO CONTROLLERS.
5. COMM.WILL BE TIED IN TO THE DISPATCH SYS.
6. RADIO CONTROL WILL BE ON FIRE ENG.

VOLTAGE 120/208v.
*PHASE 3, 4w
FEED 400 A

PANEL A
MAIN AMPS

MOUNTING
LOCATION ELEC.ROOM
DWG. NO.

DESCRIPTION	REC.	LTG.	MISC.	VOLTAGE AMPS A	B	C	BRKR AMP	P	CKT NO.	BUS CONN.	CKT NO.	BRKR AMP	P	VOLTAGE AMPS A	B	C	REC.	LTG.	DESCRIPTION
APPARATUS RM.		9		1650			20		1		2	20	1	1564				19	MULTI USE RM.
APPARATUS RM.		9			1650				3		4				180		1		GFI PATIO
EXT.LIGHTS		7				1050			5		6					1472		15	DORM MED.SHOWER
RECEP.	6			1080			20	1	7		8			990				11	STORAGE,OUTDOOR
RECEP.	5				900				9		10				1750			9	OFFICE,TOILET
RECEP.	5					900			11		12					900	1		WTR.HTR.
WORK BENCH	3			540					13		14			200			1		DRINK FTN.
TELE.REC.	1				360				15		16				1200			8	EXTERIOR LITE.
IRRIG.CONT.	1					180			17		18					1200	1		DISHWASHER
TIME CLOCK			1	360					19		20			1500			1		ELEC.OVEN
SPARE									21		22				1000		1		RANGE
SPARE									23		24					900	3		RANGE HOOD REC
SPARE									25		26			1200			1		MICROWAVE
SPARE									27		28				600		1		GARB.DISP.
SPARE									29		30					650		2	SIGN LT.
GFI RESTRM.	4			720					31		32			900			5		MULTI USE RM.
DORM REC.	5				900				33		34				720		4		B.C.RM.
MEDI REC.	5					900			35		36					360	2		GFI REST RM.
DORM REC.	5			900					37		38	125		18330					SUB PNL A/C
SPACE					—				39		40				18330				SUB PNL A/C
SPACE						—			41		42	3				18330			SUB PNL A/C
SPACE																			
AØ 21,950 V				5250	3910	3030			BØ 13,778 V					CØ 10,462 V					

* ON TIME CLOCK
TOTAL WATTS 60,194 V+ L.C.L.= 62,458 V= 173 F.L.A.

VOLTAGE 120/208v.
PHASE 3, 4w
FEED 125 A

PANEL E
MAIN AMPS

MOUNTING
LOCATION ELEC.ROOM
DWG. NO.

DESCRIPTION	REC.	LTG.	MISC.	VOLTAGE AMPS A	B	C	BRKR AMP	P	CKT NO.	BUS CONN.	CKT NO.	BRKR AMP	P	VOLTAGE AMPS A	B	C	REC.	LTG.	DESCRIPTION
REMOTE RADIO	1			300			20	1	1		2	20	1	2600			2		REFRIG.
EMERG. LTG.		7			690		20	1	3		4				1976			9	EMERG.LTG.
COMPUTER S.C.	1					860	20	3	5		6					600	1		FREEZER
	1		500						7		8	20	3	960					DOOR OPENER
	1				500				9		10				960				
F A P						720			11		12					960			
MASTER PNL				500					13		14			960					DOOR OPENER
COMP.					800				15		16				960				
PCF OFFICE	3					540			17		18					960	1		
CIVIL DEFENCE SIREN				1935			25	1	19		20	20	1				1		SPACE
FIRE ALARM					300		20	1	21		22				1800		1		BATTERY CHARGER
SPACE						—	—	—	23		24					840			GAS PUMP
AIR COMP.				1740			30	3	25		26			840					DIESEL PUMP
					1740				27		28				840				DAY TANK
						1740			29		30					880			GAS HEATER
									31		32			880					GAS HEATER
									33		34				900				BATT.CHARG.
									35		36								
											38								
											40								
											42								
				4783	3746	3500								5160	6936	3760			

TOTAL WATTS 26,913V+ LCL= 27,485 V =76 FLA
CØ 7260 V

SEP 1 8 1986
ORANGE COUNTY
Development Services

ELECTRICAL -FLOOR PLAN
SANTA MARGARITA FIRE STATION

Project No.
Designer
Drawn by
Date
Scale
Revisions

Sheet