WATERSHED CONSERVATION AUTHORITY

OAKS STAIRWAY & OVERLOOK PROJECT
EAST FORK, SAN GABRIEL RIVER

VICINITY MAP

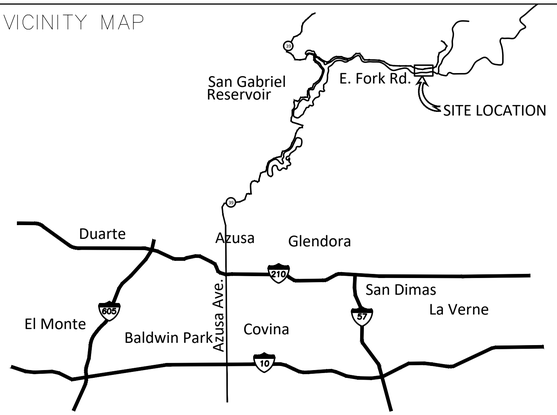

VICINITY MAP
NTS

LOCATION MAP

PROJECT LOCATION

THE PROPOSED PROJECT IS LOCATED APPROXIMATELY 14 MILES NORTH OF THE CITY OF AZUSA ON FEDERAL LANDS MANAGED BY THE ANGELES NATIONAL FOREST SAN GABRIEL MOUNTAINS NATIONAL MONUMENT, WITHIN THE BOUNDARIES OF THE WATERSHED CONSERVATION AUTHORITY TERRITORY. THE OAKS ACCESS SITE IS LOCATED DIRECTLY OPPOSITE TO THE OAKS PICNIC AREA, APPROXIMATELY .5 MILES DOWNSTREAM OF THE JUNCTION OF EAST FORK ROAD AND GLENDORA MOUNTAIN ROAD.

PROJECT DESCRIPTION

THE 1.16-ACRE OAKS STAIRWAY & OVERLOOK PROJECT CONSISTS OF .23 ACRES OF HILLSIDE RESTORATION USING LOCALLY SOURCED NATIVE PLANT SPECIES, OVERLOOK AREA WITH EXPOSED AGGREGATE CONCRETE PATH AND STONE BARRIER WALL, KIOSK, 3 SHADE STRUCTURES, PICNIC TABLES, SHADE TREES, 67 STRIPED ASPHALT PARKING SPACES, TWO 4-UNIT RESTROOMS, BIKE PARKING, AND TRASH RECEPTACLES. THE PROJECT ALSO INCLUDES TWO FORMALIZED PATHS TO ACCESS THE EAST FORK FOR RECREATIONAL USE. MAINTAINING A RUSTIC AESTHETIC USING LOCAL STONE, CONCRETE WITH EXPOSED AGGREGATE, AND DECOMPOSED GRANITE, THE PROJECT SHALL PROVIDE SAFE ACCESS TO THE RIVER TERRACE AND PREVENT EROSION.

GENERAL NOTES

1. CONTRACTOR SHALL VERIFY ALL DIMENSIONS AND CONDITIONS IN FIELD AT START OF PROJECT. REPORT ANY DISCREPANCY IMMEDIATELY TO PROJECT MANAGER.
2. THESE NOTES SHALL BE USED IN CONJUNCTION WITH THE PLANS AND SPECIFICATIONS, ANY DISCREPANCIES SHALL BE BROUGHT TO THE ATTENTION OF THE LANDSCAPE ARCHITECT AND THE OWNER.
3. ALL WORK IN RIGHT OF WAY SHALL BE PERFORMED ACCORDING TO CURRENT STANDARD SPECIFICATIONS FOR PUBLIC WORKS CONSTRUCTION ("THE GREENBOOK") LATEST EDITION.
4. THIS WORK SHALL BE INSTALLED BY A LICENSED CONTRACTOR WHO SHALL CARRY WORKMAN'S COMPENSATION, PUBLIC LIABILITY AND PROPERTY DAMAGE INSURANCE.
5. CHECK FOR EXISTING UTILITY LOCATIONS PRIOR TO EXCAVATION WORK. NOTIFY PERTINENT UTILITIES AND DIG ALERT, UNDERGROUND SERVICE ALERT, AT 8-1-1 TWO WORKING DAYS PRIOR TO CONSTRUCTION. CONTRACTOR SHALL TAKE SOLE RESPONSIBILITY FOR COST INCURRED DUE TO DAMAGE AND REPLACEMENT OF SAID UTILITIES.
6. THE CONTRACTOR SHALL BE RESPONSIBLE FOR OBTAINING ANY AND ALL PERMITS AND SHALL PAY ALL FEES NECESSARY FOR ENCROACHMENT, GRADING, DEMOLITION AND DISPOSAL OF SAID MATERIALS AS REQUIRED BY PRIVATE, LOCAL AND STATE JURISDICT
7. CONTRACTOR SHALL PROVIDE PRELIMINARY AND FINAL LIEN RELEASES FROM ALL SUB-CONTRACTORS PRIOR TO FINAL PAYMENT.
8. CONTRACTOR SHALL NOT WILLFULLY PROCEED WITH DEMOLITION OR CONSTRUCTION SHOWN WHEN IT IS OBVIOUS THAT UNKNOWN CONDITIONS, OBJECTS, OR GRADE CHANGES EXIST THAT MAY NOT HAVE BEEN KNOWN DURING THE PREPARATION OF THESE PLANS. SUCH CONDITIONS, OBJECTS, OR GRADE CHANGES SHALL BE IMMEDIATELY BROUGHT TO THE ATTENTION OF THE PROJECT MANAGER. THE CONTRACTOR SHALL ASSUME FULL RESPONSIBILITY FOR ALL NECESSARY REVISIONS DUE TO FAILURE TO GIVE SUCH NOTICE.
9. CONTRACTOR AGREES TO ASSUME SOLE AND COMPLETE RESPONSIBILITY FOR THE JOB SITE CONDITIONS DURING THE COURSE OF CONSTRUCTION OF THIS PROJECT, INCLUDING THE SAFETY OF ALL PERSONS AND PROPERTY. THE CONTRACTOR AT HIS/HER COST SHALL INDEMNIFY AND HOLD THE LANDSCAPE ARCHITECT HARMLESS AND FREE FROM ANY AND ALL LIABILITY, REAL AND ALLEGED, IN CONNECTION WITH THE PERFORMANCE OF WORK ON THIS PROJECT, EXCEPT FOR LIABILITIES ARISING FROM THE SOLE NEGLIGENCE OF THE OWNER OR THE LANDSCAPE ARCHITECT.
10. UPON COMPLETION OF INSTALLATION, AN ESTABLISHMENT PERIOD OF 60 DAYS SHALL COMMENCE, AND UPON WRITTEN VERIFICATION FROM THE INSPECTOR THAT ESTABLISHMENT IS ACCOMPLISHED, THE 180 DAY MAINTENANCE PERIOD SHALL COMMENCE. SAID MAINTENANCE PERIOD SHALL CONCLUDE ONLY AFTER LEAF-OUT AND OVERALL PLANT HEALTH AND WITH THE WCA/ANF ACCEPTANCE OF THE IMPROVEMENTS. MAINTENANCE SHALL INCLUDE WEEDING, IRRIGATION, PLANT REPLACEMENT AND RAISING/ADJUSTING TREE AND PLANT ROOTBALLS WHICH SETTLE BELOW GRADE. MAINTENANCE ALSO INCLUDES ALL REPAIRS, REPLACEMENT, CLEANING AND ADJUSTING NECESSARY TO KEEP THE IRRIGATION SYSTEM IN GOOD WORKING ORDER WITH PROPER COVERAGE, REQUIRED PRIOR TO FINAL ACCEPTANCE OF THE WORK BY THE WCA/ANF.
11. CONTRACTOR SHALL KEEP THE PREMISES CLEAN AND FREE OF EXCESS EQUIPMENT, MATERIALS AND RUBBISH INCIDENTAL TO THE WORK. ALL CONSTRUCTION DEBRIS SHALL BE CLEARED FROM THE SITE AT THE END OF EACH DAY.

PROJECT CONTACTS

PROJECT MANAGER
WATERSHED CONSERVATION AUTHORITY
ATTN: NOLA TALMAGE
100 N. OLD SAN GABRIEL CANYON ROAD
AZUSA, CA 91702
NTALMAGE@WCA.CA.GOV
(310)907-6980

CONSTRUCTION MANAGER
JESSIE COREA
JESSIE.COREA@WEBBASSOCIATES.COM
(951) 248-4273

PROJECT MANAGER
ROBERT SEGARRA
RSEGARRA@WCA.CA.GOV
+1(562) 583-6743

LANDSCAPE ARCHITECT
LYNNE DWYER
2616 NORTH FIGUEROA, SUITE A
LOS ANGELES, CA 90065
LDWYERLA@GMAIL.COM
(323) 839-1516

PROJECT OWNER
ANGELES NATIONAL FOREST
SAN GABRIEL MOUNTAINS NATIONAL MONUMENT
701 N. SANTA ANITA AVE.
ARCADIA, CA 91006
US FOREST SERVICES
CONTACT: RICARDO LOPEZ, FOREST ENGINEER
626-574-5295
RICARDO.LOPEZ2@USDA.GOV

SURVEY
B & E ENGINEERS
20 E. FOOTHILL BOULEVARD, SUITE 230
ARCADIA, CALIFORNIA 91006

CIVIL ENGINEERING
CALCIVIC ENGINEERING
IVAN CHIU, P.E.
2160 PARNELL WAY
ALTA DENA, CA 91001
(626) 798-2828

STRUCTURAL ENGINEER
COSTA AND ASSOCIATES
ORLANDO COSTA, S.E.
1543 W GARVEY AVE N # 215
WEST COVINA, CA 91790
(626) 960-1811

SHEET INDEX

TS-00	TITLE SHEET
D-1.00	DEMOLITION PLAN
L-1.00	DESIGN INTENT
L-2.00	CONSTRUCTION PLAN
L-2.01	CONSTRUCTION PLAN
L-2.50	CONSTRUCTION DETAILS
L-2.51	CONSTRUCTION DETAILS
L-2.52	CONSTRUCTION DETAILS
L-2.53	CONSTRUCTION DETAILS
L-2.54	CONSTRUCTION DETAILS
L-3.00	INTERPRETIVE PLAN
L-3.50	SIGNAGE DETAILS
L-4.00	PLANTING PLAN
L-4.50	PLANTING NOTES
L-5.00	ENVIRONMENTAL PROTECTION MEASURES
L-5.01	ENVIRONMENTAL PROTECTION GUIDELINES
L-6.00	STREET IMPROVEMENTS NOTES
L-6.01	EAST FORK ROAD
L-6.02	EAST FORK ROAD
C-1.00	GRADING PLAN GENERAL NOTES
C-1.01	EROSION CONTROL PLAN
C-2	GRADING PLAN
C-3	GRADING PLAN
C-3.01	SECTION TRAIL PROFILE #1
C-3.02	SECTION AND DETAILS
C-4	HORIZONTAL CONTROL
C-5	DETAILS
S-1.50	SHADE STRUCTURE ELEVATIONS
S-1.51	SHADE STRUCTURE DETAILS
S-1.52	SHADE STRUCTURE DETAILS
S-101	GENERAL NOTES
S-102	TYPICAL DETAILS
S-201	SHADE TRELLIS FRAMING PLAN
S-202	SHADE TRELLIS SECTIONS & DETAILS
S-203	KIOSK PLANS & DETAILS
~~A-1.0~~	~~ROMTEC RESTROOM TITLE PAGE~~ OMIT
~~A-1.1~~	~~ROMTEC RESTROOM FLOOR PLAN~~ OMIT
~~A-2.1~~	~~ROMTEC RESTROOM ELEVATION~~ OMIT
~~A-2.2~~	~~ROMTEC RESTROOM ELEVATION~~ OMIT
~~S-3.1~~	~~ROMTEC RESTROOM STRUCTURAL CMU PLAN & DETAILS~~ OMIT
~~S-4.1~~	~~ROMTEC RESTROOM FOUNDATION PLAN AND DETAILS~~ OMIT
CS-0.00	POLIGON COVER SHEET
CS-1.00	POLIGON ARCHITECTURAL ELEVATIONS
CS-2.00	POLIGON STRUCTURAL FRAMING PLAN
CS-3.00	POLIGON COLUMN LAYOUT
1	A6
CXT-1.00	CXT BUILDING ELEVATIONS
CXT-2.00	CXT INTERIOR ELEVATIONS
CXT-3.00	CXT FLOOR PLAN
CXT-4.00	CXT TYPICAL TRANSPORT CONFIGURATION
3	
W-1.00	STAMPED CONCRETE BARRIER WALL BID ALTERNATE A4
3	

DIAL BEFORE YOU DIG
DIAL 8-1-1 FROM ANY PHONE OR
VIA WEB AT: http://www.digalert.org/digexpress.asp
DIGALERT
PLAY IT SAFE. DIAL BEFORE YOU DIG!
AT LEAST TWO WORKING DAYS PRIOR TO EXCAVATING
SERVING NINE SOUTHERN CALIFORNIA COUNTIES

REVISIONS	DATE
1 BID ALTERNATES	05/16/2026
2 PLAN REVISIONS	05/16/2026
3 CXT RESTROOM	05/16/2026

WATERSHED CONSERVATION AUTHORITY
100 N OLD SAN GABRIEL CANYON ROAD
AZUSA, CA 91702
PHONE: (626) 815-1019

Lynne Dwyer
Landscape Architect
2616 NORTH FIGUEROA, SUITE A
LOS ANGELES, CA 90065
(323) 221-9500

SHEET TITLE: TITLE SHEET

PROJECT TITLE: OAKS STAIRWAY & OVERLOOK
EAST FORK, SAN GABRIEL RIVER

LICENSED LANDSCAPE ARCHITECT
LYNNE DWYER
Signature
5/31/2027
Renewal Date
LICENSE NO. 5657
STATE OF CALIFORNIA

DRAWN BY:	KT
CHECKED BY:	LD
PROJECT NO.	OS2019
DATE:	JUNE 1 2026

TS-00

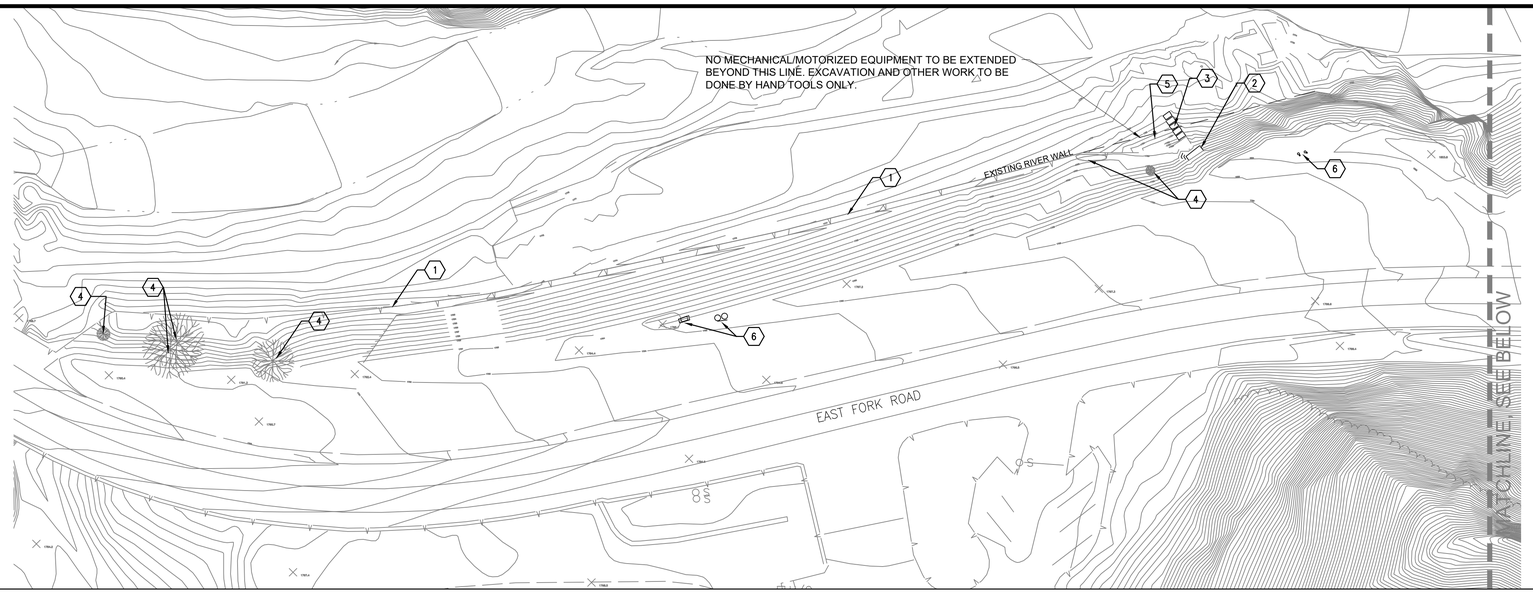

GENERAL DEMOLITION & SITE PREPARATION NOTES:

1. SEE ENVIRONMENTAL PROTECTION NOTES, SHEETS L-5.00 & L-5.01.
2. CONTRACTOR TO CLEAR PROJECT SITE AREA WITH THE CONFINES OF THE DEMOLITION LIMIT LINE. THE CONTRACTOR SHALL DEMOLISH AND REMOVE FROM THE SITE ALL EXISTING UTILITIES, STRUCTURES, PLANTERS, TREES, AND ALL OTHER SITE FEATURES, UNLESS OTHERWISE NOTED ON THE PLAN. HAUL FROM SITE AND DISPOSE.
3. REMOVAL OF NON-NATIVE LANDSCAPING SHALL INCLUDE ROOTS AND ORGANIC MATERIALS. DISPOSE OFF SITE.
4. THE CONTRACTOR SHALL BE RESPONSIBLE FOR OBTAINING ANY AND ALL PERMITS AND SHALL PAY ALL FEES NECESSARY FOR ENCROACHMENT, GRADING, DEMOLITION AND DISPOSAL OF SAID MATERIALS AS REQUIRED BY PRIVATE, LOCAL AND STATE JURISDICTIONS.
5. THE CONTRACTOR SHALL BE RESPONSIBLE FOR A SITE INSPECTION TO FULLY ACKNOWLEDGE THE EXTEND OF THE DEMOLITION WORK.
6. EROSION CONTROL SHALL BE IMPLEMENTED DURING DEMOLITION.
7. DEMOLITION IS LIMITED TO WITHIN DEMOLITION LIMIT LINE UNLESS NOTED OTHERWISE.
8. THE CONTRACTOR SHALL VERIFY THE LOCATION AND QUANITITY OF EXISTING SURFACE STRUCTURES AND SHALL BE SOLELY RESPONSIBLE FOR ANY UNIDENTIFIED UTILITES, IMPROVEMENTS, TREES, ETC. TO BE DEMOLISHED AND REMOVED WITHIN THE DEMOLITION LIMIT LINE, INCLUDING APPURTENANT FOUNDATIONS OR SUPPORTS.
9. DEMOLITION CALLOUTS IN THIS SECTION ARE REPRESENTATIVE OF WHAT IS TO BE DONE, NOT AN ITEMIZED ACCOUNTING FOR ITEM THAT IS TO BE DEMOLISHED, REMOVED AND DISPOSED OF.
10. REMOVE ALL DEBRIS AND MATERIAL FROM SITE INCLUDING BUT NOT LIMITED TO CONSTRUCTION MATERIALS AND FENCING. HAUL FROM SITE AND DISPOSE AT APPROVED FACILITY FOR SUCH.
11. PROTECT IN PLACE ALL NATIVE VEGETATION. SEE EROSION CONTROL PLAN, SHEET C-101.
12. STOCKPILE ALL CLEAN BOULDERS & COBBLES FOR RE-USE.
13. ANY DISCREPANCIES WITH WHAT IS SHOWN ON THE PLAN AND WHAT OCCURS IN THE FIELD SHOULD BE BROUGHT TO THE ATTENTION OF THE PROJECT MANAGER. FAILURE TO DO SO WILL RESULT IN THE CONTRACTOR BEING RESPONSIBLE FOR ANY OCCURENCE OF COST THAT MAY ARISE OUT OF SAID DISCREPANCIES.

DEMOLITION LEGEND:

1. PROTECT-IN-PLACE WALLS, AND OTHER SITE FEATURES WITH TEMPORARY CONSTRUCTION FENCING.
2. EXISTING CONCRETE CRIB WALL TO BE DEMOLISHED AND DISPOSED OF OFF SITE.
3. EXISTING CONCRETE CRIB STEPS TO BE DEMOLISHED AND DISPOSED OF OFF SITE.
4. PROTECT-IN-PLACE ALL EXISTING NATIVE VEGETATION WITH TEMPORARY CONSTRUCTION FENCING.
5. MISCELLANEOUS RUBBLE AND DEBRIS. DISPOSE OFF SITE.
6. EXISTING SIGN TO BE DEMOLISHED AND DISPOSED OF OFF SITE.
7. EXISTING POST TO BE DEMOLISHED AND DISPOSED OF OFF SITE.
8. EXISTING SST RESTROOM TO BE DEMOLISHED AND DISPOSED OF OFF SITE.
9. EXISTING SIGN AND MASONRY BASE TO BE DEMOLISHED AND DISPOSED OF OFF SITE.

SCALE: 1" = 30'

0 15 30 60

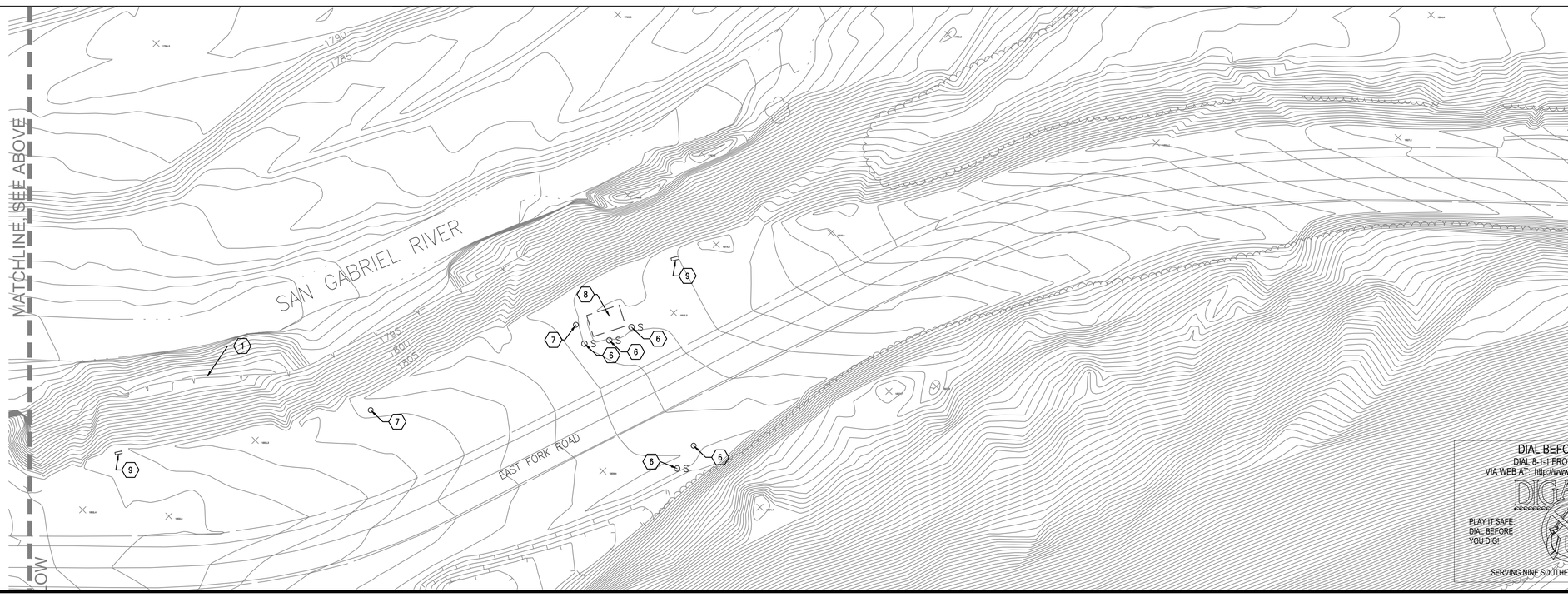

DIAL BEFORE YOU DIG
DIAL 8-1-1 FROM ANY PHONE OR
VIA WEB AT: http://www.digalert.org/digexpress.asp
DIGALERT
PLAY IT SAFE DIAL BEFORE YOU DIG!
AT LEAST TWO WORKING DAYS PRIOR TO EXCAVATING
SERVING NINE SOUTHERN CALIFORNIA COUNTIES

REVISIONS	DATE
1 BID ALTERNATES	05/16/2026
2 PLAN REVISIONS	05/16/2026
3 CXT RESTROOM	05/16/2026

WATERSHED CONSERVATION AUTHORITY
100 N OLD SAN GABRIEL CANYON ROAD
AZUSA, CA 91702
PHONE: (626) 815-1019

Lynne Dwyer
Landscape Architect
2616 NORTH FIGUEROA, SUITE A
LOS ANGELES, CA 90065
(323) 221-9500

SHEET TITLE
DEMOLITION PLAN

PROJECT TITLE
OAKS STAIRWAY & OVERLOOK
EAST FORK, SAN GABRIEL RIVER

LICENSED LANDSCAPE ARCHITECT
LYNNE DWYER
5/31/2027
Renewal Date
LICENSE NO. 2607
STATE OF CALIFORNIA

DRAWN BY:	KT
CHECKED BY:	LD
PROJECT NO.	OS2019
DATE:	JUNE 1 2026

D-1.00

PROJECT HISTORY

THE EAST FORK SAN GABRIEL RIVER TRASH TMDL IMPLEMENTATION AND RECREATION IMPROVEMENTS PROJECT IS A MULTI-PHASE INITIATIVE TO ADDRESS POLLUTION AND ENHANCE USER EXPERIENCE IN THE EAST FORK SAN GABRIEL RIVER. ITS CORE GOALS ARE TO MANAGE AND REDUCE TRASH ACCUMULATION TO MEET THE EAST FORK SAN GABRIEL RIVER TRASH TMDL AND TO IMPROVE THE AREA'S RECREATION FACILITIES, SUCH AS TRAILS, RESTROOMS, AND PICNIC AREAS, TO PROMOTE RESPONSIBLE USE AND A SUSTAINABLE ACCESS MODEL.

PROJECT GOALS

- ADDRESS TRASH POLLUTION: IMPLEMENT MANAGEMENT PRACTICES TO PREVENT TRASH FROM ACCUMULATING IN THE RIVER, WHICH HAS BEEN DESIGNATED AS AN IMPAIRED WATER BODY DUE TO TRASH DEPOSITION.
- IMPROVE RECREATION: CREATE A BETTER EXPERIENCE FOR VISITORS BY UPGRADING FACILITIES LIKE TRAILS, PICNIC AREAS, AND RESTROOMS.
- PROMOTE STEWARDSHIP: DEVELOP A SUSTAINABLE ACCESS MODEL THAT ENCOURAGES RESPONSIBLE STEWARDSHIP OF THE RIVER AND SURROUNDING ECOSYSTEM.

KEY PROJECT ELEMENTS

- PHASE ONE CONSTRUCTION: INCLUDES BUILDING ACCESS TRAILS AND STAIRS TO THE RIVER, ADDING MORE TRASH RECEPTACLES, AND IMPROVING PARKING AREAS.
- RECREATION ENHANCEMENTS: PLANNED IMPROVEMENTS INCLUDE SHADED PICNIC AREAS, RESTROOMS, AND INTERPRETIVE SIGNAGE.
- HABITAT RESTORATION: THE PROJECT WILL ALSO INCLUDE ELEMENTS OF HABITAT RESTORATION AND PROTECTION, SUCH AS NATIVE PLANT RESTORATION, TO SUPPORT THE RIVER'S ECOSYSTEM AND ENDANGERED SPECIES.
- PUBLIC ENGAGEMENT: THE WATERSHED CONSERVATION AUTHORITY (WCA) AND THE U.S. FOREST SERVICE HAVE SOLICITED PUBLIC COMMENT ON PROJECT PLANS AS PART OF THE ENVIRONMENTAL REVIEW PROCESS.

TMDL HISTORY

- TMDL ESTABLISHMENT: THE EAST FORK SAN GABRIEL RIVER TRASH TMDL WAS ESTABLISHED BY THE CALIFORNIA STATE WATER RESOURCES CONTROL BOARD IN 2000 TO ADDRESS SIGNIFICANT TRASH POLLUTION FROM RECREATIONAL VISITORS.
- ONGOING IMPLEMENTATION: THE FOREST SERVICE IS TASKED WITH IMPLEMENTING BEST MANAGEMENT PRACTICES (BMPS) TO COMPLY WITH THE TMDL, WITH MONITORING AND REPORTING REQUIREMENTS.
- FUNDING: FUNDING FOR THE PROJECT IS FROM STATE AND FEDERAL SOURCES ARE FUNDING THE FIRST PHASE OF THE NEW RECREATION IMPROVEMENTS PROJECT, A LONG-TERM EFFORT TO COMBINE TMDL COMPLIANCE WITH RECREATION ENHANCEMENTS.

THE SAN GABRIEL MOUNTAINS NATIONAL MONUMENT

IS A PROTECTED AREA COVERING PARTS OF THE ANGELES NATIONAL FOREST AND SAN BERNARDINO NATIONAL FOREST IN SOUTHERN CALIFORNIA. PRESIDENT BARACK OBAMA FIRST DESIGNATED THE MONUMENT IN 2014, AND IT WAS EXPANDED IN 2024 TO PROTECT MORE OF THE AREA'S BIODIVERSITY, HISTORICAL SITES, AND CULTURAL HERITAGE. IT IS MANAGED BY THE U.S. FOREST SERVICE.

CONCEPT SKETCH FOR RIVER ACCESS - BIRDS EYE VIEW

CONCEPT SKETCHES FOR RIVER ACCESS - VIEW FROM RIVER BED

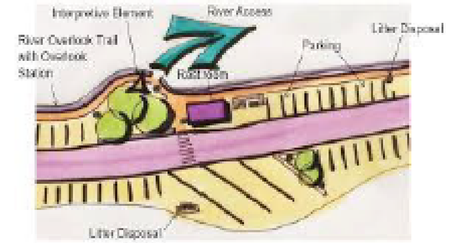

SUSTAINABLE ACCESS MODEL DIAGRAM

SAN GABRIEL RIVER CONFLUENCE WITH CATTLE CANYON IMPROVEMENTS PROJECT

TO BETTER MANAGE RECREATION USE AND BALANCE THE NEEDS FOR RESOURCE PROTECTION ALONG AN APPROXIMATE 2.5-MILE REACH OF THE EAST FORK OF THE SAN GABRIEL RIVER, THE WATERSHED CONSERVATION AUTHORITY HAS PARTNERED WITH THE ANGELES NATIONAL FOREST [ANF] SAN GABRIEL MOUNTAINS NATIONAL MONUMENT TO CONDUCT THE SAN GABRIEL RIVER CONFLUENCE WITH CATTLE CANYON IMPROVEMENTS PROJECT. RECREATIONAL USE IS HIGHLY CONCENTRATED WITHIN AREAS OF THE PROJECT SITE. THIS HEAVY USE COMBINED WITH THE LACK OF FACILITIES HAS RESULTED IN DEGRADED ENVIRONMENTAL CONDITIONS. AS A RESPONSE, THIS PROJECT REPRESENTS AN OPPORTUNITY FOR ALL STAKEHOLDERS TO ENVISION "A RIVER FUTURE" THAT SUPPORTS MULTIPLE USES INCLUDING SUSTAINABLE RECREATION. PROPOSED IMPROVEMENTS WILL PROVIDE RECREATION INFRASTRUCTURE THAT IS HIGH QUALITY, WELL-MAINTAINED, SAFE, ACCESSIBLE AND CONSISTENT WITH VISITORS' EXPECTATIONS. THESE FACILITIES WILL BE DEVELOPED TO SHIFT AND CONCENTRATE RECREATIONAL USE TO CERTAIN AREAS IN ORDER TO MINIMIZE ADVERSE EFFECTS OVER A BROADER AREA. IT IS ANTICIPATED THAT THE IMPROVEMENTS, TOGETHER WITH BETTER MANAGEMENT OF THE RECREATION RESOURCES WILL PROMOTE STEWARDSHIP OF PUBLIC LAND BY PROVIDING QUALITY AND SUSTAINABLE RECREATION OPPORTUNITIES THAT RESULT IN INCREASED VISITOR SATISFACTION. THE PROJECT ALSO INTENDS TO IMPROVE HABITAT CONDITIONS IN CERTAIN AREAS WHILE MAKING PROGRESS TOWARD ENHANCING STREAM HABITAT CONDITIONS BY RESTORING VEGETATION, MINIMIZING INVASIVE PLANTS AND NOXIOUS WEED PRESENCE, AND DEVELOPING MANAGEMENT STRATEGIES TO REGULATE ACCESS.

PROTECTED SPECIES

PROTECTED SPECIES EXIST IN THE PROJECT AREA. THE SANTA ANA SUCKER (CATOSTOMUS\ SANTAANAE) IS LISTED AS THREATENED UNDER THE FEDERAL ENDANGERED SPECIES ACT. THE EAST FORK IS ONE OF ITS LAST REMAINING VIABLE POPULATIONS. MOUNTAIN YELLOW-LEGGED FROG (RANA\ MUSCOSA) IS ENDANGERED, AND THE UPPER EAST FORK PROVIDES CRITICAL HABITAT FOR IT.

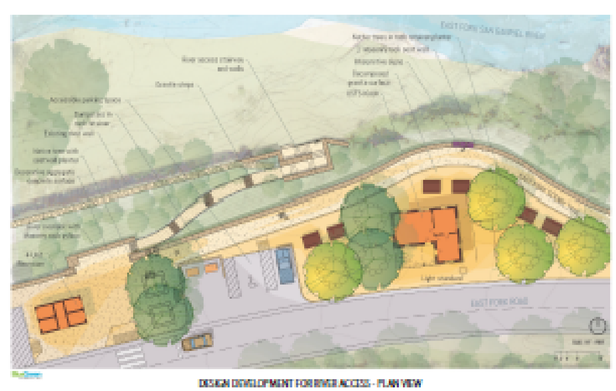

DESIGN DEVELOPMENT FOR RIVER ACCESS - PLAN VIEW

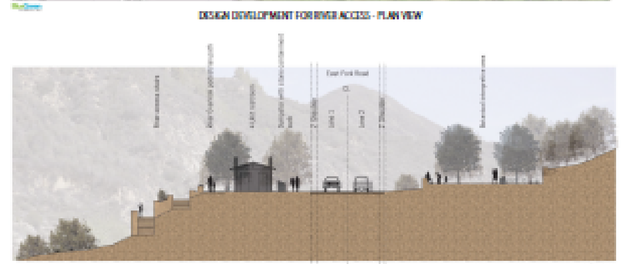

DESIGN DEVELOPMENT FOR RIVER ACCESS - SECTION

DESIGN INTENT

THE PROJECT ESTABLISHES A SUSTAINABLE ACCESS MODEL TO PROMOTE RESPONSIBLE USE AND PROVIDES A SAFE PATH TO THE RIVER.TWO RIVER ACCESS POINTS ARE INCLUDED IN THE PROJECT DESIGN. THE DOWNSTREAM ACCESS TRAIL, ACROSS FROM THE OAKS PICNIC AREA WILL BE A COMBINATION EARTHEN PATH OF COMPACTED NATURAL MINERAL SOIL, AND CONCRETE STEPS AND LANDINGS. EXISTING BEDROCK IS TO BE CHISELED OR FILLED WITH MASONRY WHERE NECESSARY TO ACHIEVE THE DESIGNED PATH. STONE MASONRY WALLS ARE TO BE CONSTRUCTION OF LOCAL ROCK FROM THE SAN GABRIEL MOUNTAINS. THE DESIGN INTENT IS TO MIMIC THE EXISTING HISTORIC WALLS USING LOCAL MATERIALS. ALONG THE RIVER ACCESS PATH STONE MASONRY WALLS ARE TO BE CONSTRUCTED WHERE CONDITIONS REQUIRE THE PATH TO BE ELEVATED OR SOILS TO BE RETAINED. IT IS INTENDED THAT NO WALL EXCEEDS FOUR FOOT IN HEIGHT. THE PROJECT LANDSCAPE ARCHITECT WILL APPROVE WALL MOCK-UPS, LOCATIONS AND ADVISE ON THE EXTENT OF THE WALLS.THE LOWER REACH OF THE EXISTING TRAIL HAS STACKED CONCRETE CRIB WALL AND STEPS THAT ARE TO BE REMOVED. IN THIS AREA RUBBLE SHOULD BE REMOVED TO EXPOSE BEDROCK. THE CONSTRUCTION OF THE LOWER LANDING WILL ALIGN WITH THE EXISTING RIVER WALLS AND SHALL NOT EXTENT INTO THE RIVER BED.

EXISTING ACCESS PATH TO BE REMOVED

REVISIONS	DATE
1 BID ALTERNATES	05/16/2026
2 PLAN REVISIONS	05/16/2026
3 CXT RESTROOM	05/16/2026

WATERSHED CONSERVATION AUTHORITY
100 N OLD SAN GABRIEL CANYON ROAD
AZUSA, CA 91702
PHONE: (626) 815-1019

Lynne Dwyer
Landscape Architect
2616 NORTH FIGUEROA, SUITE A
LOS ANGELES, CA 90065
(323) 221-9500

SHEET TITLE
PROJECT HISTORY & DESIGN INTENT

PROJECT TITLE
OAKS STAIRWAY & OVERLOOK
EAST FORK, SAN GABRIEL RIVER

LICENSED LANDSCAPE ARCHITECT
LYNNE DWYER
5/31/2027
Renewal Date
Date
LICENSE NO. 3607
STATE OF CALIFORNIA

DRAWN BY:	SH
CHECKED BY:	LD
PROJECT NO.	OS2019
DATE:	JUNE 1 2026

L-1.00

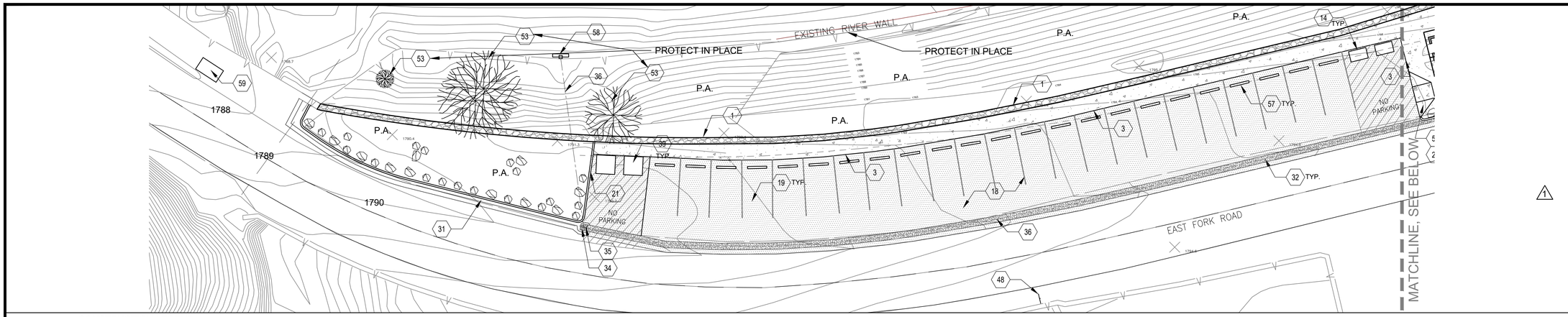

CONSTRUCTION LEGEND

1. STONE BARRIER WALL & RIVER OVERLOOK PATH, H:18" X D: 24". SEE DETAIL A & DETAIL B, L-2.52 1
2. CONCRETE PAVING WITH EXPOSED AGGREGATE FINISH. SEE DETAIL A, L-2.50
3. CONCRETE PATH WITH EXPOSED AGGREGATE FINISH AND MONOLITHIC CURB. SEE DETAIL D, SHEET L-2.50 1
4. VANHORN TRANSITION BETWEEN PAVING MATERIALS, SEE DETAIL B, SHEET L-2.50
5. STEEL RAILING. SEE DETAIL B, L-2.54
6. RIVER ACCESS PATH WITH COMPACTED NATURAL MINERAL SOIL. SEE DETAIL F, L-2.51
7. RULES SIGN, SEE DETAIL G, SHEET L-3.50
8. CONCRETE PATH STEPS WITH EXPOSED AGGREGATE FINISH. SEE DETAIL B & C, L-2.51
9. CONCRETE LANDING WITH EXPOSED AGGREGATE FINISH. SEE DETAIL E, L-2.51
10. EXISITNG EXPOSED BEDROCK TO BE INCORPORATED INTO DESIGNED PATH.
11. 8' CONCRETE PICNIC TABLE, OUTDOOR CREATIONS INC., MODEL #114, WOODGRAIN, MEDIUM SANDBLAST, COLOR PADRE, SEALER NANO. SEE DETAIL C, L-2.54
12. WEATHERED STEEL KIOSK WITH ROCK WALL BASE. SEE S101, S102, S203 AND DETAIL D, L-2.52
13. SPLIT RAIL FENCE, SEE DETAIL A, L-2.54
14. 2 YARD DUMPSTER. MODEL TBD.
15. NEW CROSS WALK, SEE L-6.00 REFER TO CURB/ENTRY RAMP & CROSS WALK ENTRANCE #1 & #2 ENLARGEMENT SEE C5
16. VAN ACCESSIBLE ADA PARKING SPACE, SEE DETAIL I, L-2.50
17. 2-UNIT TIOGA CXT STANDARD BUILDING SEE SHEET A-1.00
18. NEW ASPHALT WITH CHIP SEAL SURFACE & STRIPING, COLOR TBD. SEE DETAIL E, L-2.50 1
19. 9'X18' PARKING SPACE
20. CURB/ENTRY RAMP SHEET C5
21. CONCRETE CURB WITH EXPOSED AGGREGATE FINISH. SEE DETAIL F, T-02, T-03, T-04
22. STONE PYLON A. SEE DETAIL A & B & C, L-2.53
23. ANODIZED ALUMINUM INTERPRETIVE PANEL WITH WEATHERING STEEL FRAME. SEE DETAIL B, L-3.50 & E,F L-3.50 SEE SIGNAGE PLAN SHEET L-3.00
24. STONE PYLON B. SEE DETAIL A & B & C, L-2.53
25. IRON RANGER. SEE DETAIL H, L-2.54
26. BOULDERS, TYP., SALVAGED FROM SITE, 3' MIN. SEE DETAILS G&H, L-2.50
27. ACCESSIBLE PARKING SPACE, SEE DETAIL I, L-2.50
28. ACCESSIBLE PARKING SIGN, SEE DETAIL A (ADA PARKING SIGN), SHEET L-3.00
29. DECOMPOSED GRANITE SURFACE. SEE DETAIL B, L-2.50
30. FIXED STEEL BOLLARD, SEE DETAIL F, L-2.54
31. CONCRETE CURB AND GUTTER. SEE DETAIL C, SHEET C5
32. CONCRETE GUTTER, TYP. SEE DETAIL A, C5 1
33. WEATHERED STEEL SHADE STRUCTURE WITH MASONRY BENCH. SEE S101, S102, S201, S202, AND D & E, L-2.52
34. MEDIA FILTER WITH GREASE TRAP INSTALLED IN CATCHBASIN WITH TOP GRATE TO CAPTURE ALL RUNOFF FROM ACCESS AREA. SEE DETAIL B, C-3.02
35. 24" x 24" STANDARD CATCH BASIN WITH INSERT BASKET OLDCASTLE/KRISTAR FGP-24F WITH TRAFFIC RATED HEAVY STEEL GRATE SEE DETAIL B, C-3.02
36. DRAIN 12" DIA HDPE
37. NOT SHOWN ON PLAN. SEE NOTES IN SWPPP AND EROSION CONTROL PLAN REGARDING TEMPORARY BMPS DURING CONSTRUCTION (STAGING AREAS, SILT FENCING, ETC.)
38. RECESSED PLANTING AREA. SEE DETAIL F, C5 RAIN GARDEN, SEE DETAIL D,C5
39. 4 YARD DUMPSTER. HEAVY DUTY, COLOR BROWN
40. REMOVABLE STEEL BOLLARD. SEE DETAIL D, L-2.54
41. CONCRETE FLUSH CURB WITH EXPOSED AGGREGATE FINISH. SEE DETAIL C, L-2.50
42. WALL MOUNTED DOG WASTE BAG DISPENSER. MODEL ULINE DOG WASTE SYSTEM DISPENSER, MODEL H-5943, BROWN, RECYCLED PLASTIC
43. METAL INLAY EMEDDED IN SPECIALTY AGGREGATE SEE DETAIL H, L-3.50 1
44. DOUBLE BEAR-PROOF TRASH RECEPTACLE. BEARSAVER MODEL HA-2 DOUBLE TRASH ENCLOSURE, ADA COMPLIANT, COLOR FOREST BROWN.
45. EXPOSED AGGREGATE CURB AT EDGE OF RIVER PATH. SEE DETAIL F, L-2.51
46. CONCRETE RIVER ACCESS STEPS WITH EXPOSED AGGREGATE FINISH. SEE DETAIL A, L-2.51
47. MASONRY BENCH AT SHADE TRELLIS. SEE DETAILS D & E, L-2.52
48. PEDESTRIAN WARNING SIGN. SEE DETAIL B, L-3.00
49. PARALLEL CURB RAMP, SEE DETAIL I, L-2.50
50. PERPENDICULAR CURB RAMP, SEE DETAIL J, L-2.50
51. BIKE RACK, STEELCRAFT PRODUCTS MODEL WLBR 5, COLOR: BROWN. SEE DETAIL E, SHEET L-2.54
52. 72" CONCRETE BENCH WITH BACK & ARMREST, MFG: OUTDOOR CREATIONS, MODEL: 427 TIMBER SERIES BENCH, TEXTURE: WOODGRAIN, FINISH: MEDIUM SANDBLAST, COLOR: PADRE, SEALER: NANO, SEE DETAIL G, L-2.54
53. EXISTING TREES
54. 8'X22' PARALLEL PARKING SPACE
55. FUTURE SHUTTLE STOP AREA
56. RIVER ACCESS PATH WITH EXPOSED AGGREGATE CONCRETE. SEE DETAIL C, SHEET L-2.52
57. 4' REINFORCED PRE-CAST WHEEL STOP. SEE DETAIL D, SHEET L-2.53
58. OUTLET CONCRETE COLLAR IN WALL
59. EXISTING GRATE 5' x 7'-7"

NOTES:

ALL ROCK AND COBBLE TO BE SELECTED BY LANDSCAPE ARCHITECT AND APPROVED BY WCA/ANF

MATERIALS LEGEND

- DECOMPOSED GRANITE
- EXPOSED AGGREGATE CONCRETE
- ASPHALT WITH CHIP SEAL SURFACE
- COMPACTED NATURAL MINERAL SOIL
- P.A. PLANTED AREA

SCALE: 1" =16'
0 8 16 32

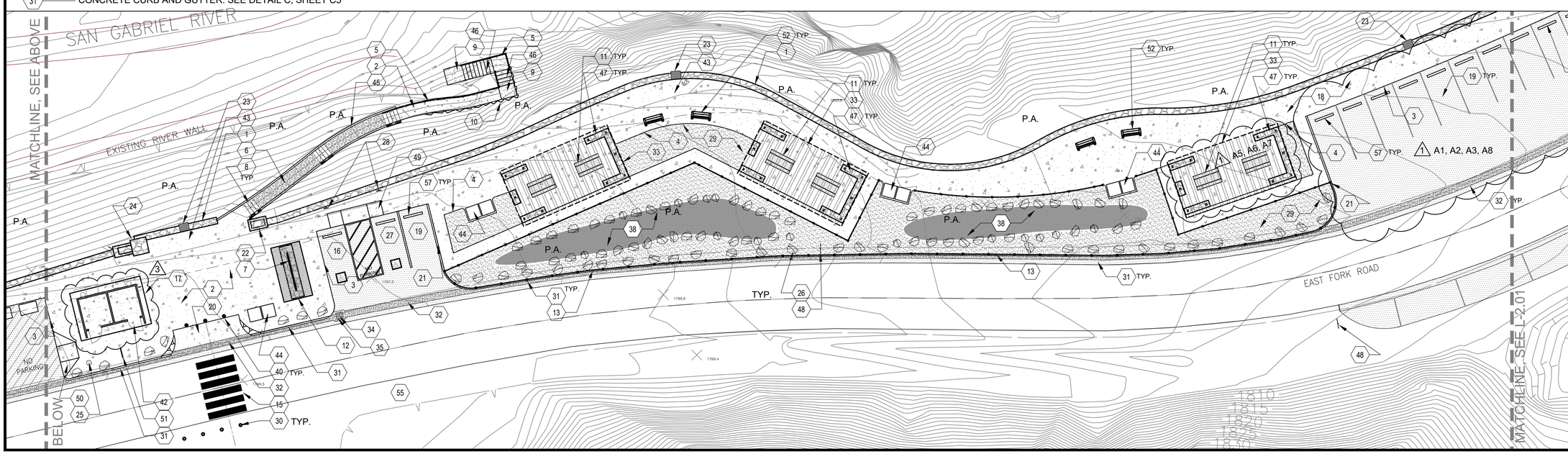

REVISIONS	DATE
1 BID ALTERNATES	05/16/2026
2 PLAN REVISIONS	05/16/2026
3 CXT RESTROOM	05/16/2026

WATERSHED CONSERVATION AUTHORITY
100 N OLD SAN GABRIEL CANYON ROAD
AZUSA, CA 91702
PHONE: (626) 815-1019

Lynne Dwyer
Landscape Architect
2616 NORTH FIGUEROA, SUITE A
LOS ANGELES, CA 90065
(323) 221-9500

SHEET TITLE: CONSTRUCTION PLAN

PROJECT TITLE: OAKS STAIRWAY & OVERLOOK
EAST FORK, SAN GABRIEL RIVER

LICENSED LANDSCAPE ARCHITECT
LYNNE DWYER
5/31/2027
Renewal Date
Date
LICENSE NO. 3607
STATE OF CALIFORNIA

DRAWN BY:	SH
CHECKED BY:	LD
PROJECT NO.	OS2019
DATE:	JUNE 1 2026

L-2.00

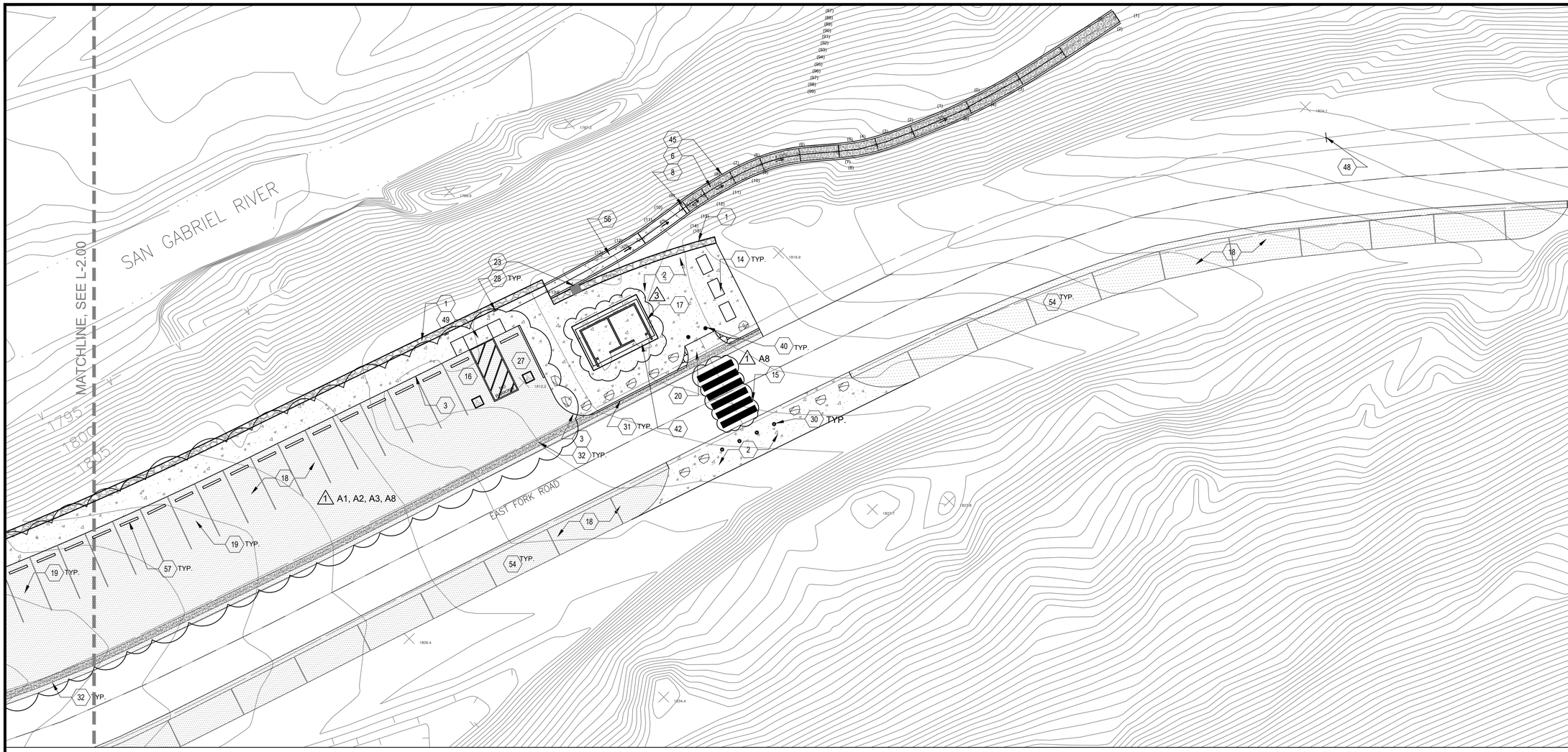

CONSTRUCTION LEGEND

1. STONE BARRIER WALL & RIVER OVERLOOK PATH, H:18" X D: 24". SEE DETAIL A & DETAIL B, L-2.52 1 A4
2. CONCRETE PAVING WITH EXPOSED AGGREGATE FINISH. SEE DETAIL A, L-2.50
3. CONCRETE PATH WITH EXPOSED AGGREGATE FINISH AND MONOLITHIC CURB. SEE DETAIL D, SHEET L-2.50 1 A2
4. VANHORN TRANSITION BETWEEN PAVING MATERIALS, SEE DETAIL B, SHEET L-2.50
5. STEEL RAILING. SEE DETAIL B, L-2.54
6. RIVER ACCESS PATH WITH COMPACTED NATURAL MINERAL SOIL. SEE DETAIL F, L-2.51
7. RULES SIGN, SEE DETAIL G, SHEET L-3.50
8. CONCRETE PATH STEPS WITH EXPOSED AGGREGATE FINISH. SEE DETAIL B & C, L-2.51
9. CONCRETE LANDING WITH EXPOSED AGGREGATE FINISH. SEE DETAIL E, L-2.51
10. EXISITNG EXPOSED BEDROCK TO BE INCORPORATED INTO DESIGNED PATH.
11. 8' CONCRETE PICNIC TABLE, OUTDOOR CREATIONS INC., MODEL #114, WOODGRAIN, MEDIUM SANDBLAST, COLOR PADRE, SEALER NANO. SEE DETAIL C, L-2.54 1 A7
12. WEATHERED STEEL KIOSK WITH ROCK WALL BASE. SEE S101, S102, S203 AND DETAIL D, L-2.52
13. SPLIT RAIL FENCE, SEE DETAIL A, L-2.54
14. 2 YARD DUMPSTER. MODEL TBD.
15. NEW CROSS WALK, SEE L-6.00 REFER TO CURB/ENTRY RAMP & CROSS WALK ENTRANCE #1 & #2 ENLARGEMENT SEE C5 1 A8
16. VAN ACCESSIBLE ADA PARKING SPACE, SEE DETAIL I, L-2.50
17. 2-UNIT TIOGA CXT STANDARD BUILDING SEE SHEET A-1.00
18. NEW ASPHALT WITH CHIP SEAL SURFACE & STRIPING, COLOR TBD. SEE DETAIL E, L-2.50 1 A1
19. 9'X18' PARKING SPACE
20. CURB/ENTRY RAMP SHEET C5
21. CONCRETE CURB WITH EXPOSED AGGREGATE FINISH. SEE DETAIL F, T-02, T-03, T-04
22. STONE PYLON A. SEE DETAIL A & B & C, L-2.53
23. ANODIZED ALUMINUM INTERPRETIVE PANEL WITH WEATHERING STEEL FRAME. SEE DETAIL B, L-3.50 & E,F L-3.50 SEE SIGNAGE PLAN SHEET L-3.00
24. STONE PYLON B. SEE DETAIL A & B & C, L-2.53
25. IRON RANGER. SEE DETAIL H, L-2.54
26. BOULDERS, TYP., SALVAGED FROM SITE, 3' MIN. SEE DETAILS G&H, L-2.50
27. ACCESSIBLE PARKING SPACE, SEE DETAIL I, L-2.50
28. ACCESSIBLE PARKING SIGN, SEE DETAIL A (ADA PARKING SIGN), SHEET L-3.00
29. DECOMPOSED GRANITE SURFACE. SEE DETAIL B, L-2.50
30. FIXED STEEL BOLLARD, SEE DETAIL F, L-2.54
31. CONCRETE CURB AND GUTTER. SEE DETAIL C, SHEET C5
32. CONCRETE GUTTER, TYP. SEE DETAIL A, C5 1 A3
33. WEATHERED STEEL SHADE STRUCTURE WITH MASONRY BENCH. SEE S101, S102, S201, S202, AND D & E, L-2.52 1 A5, A6
34. MEDIA FILTER WITH GREASE TRAP INSTALLED IN CATCHBASIN WITH TOP GRATE TO CAPTURE ALL RUNOFF FROM ACCESS AREA. SEE DETAIL B, C-3.02
35. 24" x 24" STANDARD CATCH BASIN WITH INSERT BASKET OLDCASTLE/KRISTAR FGP-24F WITH TRAFFIC RATED HEAVY STEEL GRATE SEE DETAIL B, C-3.02
36. DRAIN 12" DIA HDPE
37. NOT SHOWN ON PLAN. SEE NOTES IN SWPPP AND EROSION CONTROL PLAN REGARDING TEMPORARY BMPS DURING CONSTRUCTION (STAGING AREAS, SILT FENCING, ETC.)
38. RECESSED PLANTING AREA. SEE DETAIL F, C5 RAIN GARDEN, SEE DETAIL D,C5
39. 4 YARD DUMPSTER. HEAVY DUTY, COLOR BROWN
40. REMOVABLE STEEL BOLLARD. SEE DETAIL D, L-2.54
41. CONCRETE FLUSH CURB WITH EXPOSED AGGREGATE FINISH. SEE DETAIL C, L-2.50
42. WALL MOUNTED DOG WASTE BAG DISPENSER. MODEL ULINE DOG WASTE SYSTEM DISPENSER, MODEL H-5943, BROWN, RECYCLED PLASTIC
43. METAL INLAY EMEDDED IN SPECIALTY AGGREGATE SEE DETAIL H, L-3.50 2
44. DOUBLE BEAR-PROOF TRASH RECEPTACLE. BEARSAVER MODEL HA-2 DOUBLE TRASH ENCLOSURE, ADA COMPLIANT, COLOR FOREST BROWN.
45. EXPOSED AGGREGATE CURB AT EDGE OF RIVER PATH. SEE DETAIL F, L-2.51
46. CONCRETE RIVER ACCESS STEPS WITH EXPOSED AGGREGATE FINISH. SEE DETAIL A, L-2.51
47. MASONRY BENCH AT SHADE TRELLIS. SEE DETAILS D & E, L-2.52 1 A4
48. PEDESTRIAN WARNING SIGN. SEE DETAIL B, L-3.00
49. PARALLEL CURB RAMP, SEE DETAIL I, L-2.50
50. PERPENDICULAR CURB RAMP, SEE DETAIL J, L-2.50
51. BIKE RACK, STEELCRAFT PRODUCTS MODEL WLBR 5, COLOR: BROWN. SEE DETAIL E, SHEET L-2.54
52. 72" CONCRETE BENCH WITH BACK & ARMREST, MFG: OUTDOOR CREATIONS, MODEL: 427 TIMBER SERIES BENCH, TEXTURE: WOODGRAIN, FINISH: MEDIUM SANDBLAST, COLOR: PADRE, SEALER: NANO, SEE DETAIL G, L-2.54
53. EXISTING TREES
54. 8'X22' PARALLEL PARKING SPACE
55. FUTURE SHUTTLE STOP AREA
56. RIVER ACCESS PATH WITH EXPOSED AGGREGATE CONCRETE. SEE DETAIL C, SHEET L-2.52
57. 4' REINFORCED PRE-CAST WHEEL STOP. SEE DETAIL D, SHEET L-2.53
58. OUTLET CONCRETE COLLAR IN WALL
59. EXISTING GRATE 5' x 7'-7"

NOTES:

ALL ROCK AND COBBLE TO BE SELECTED BY LANDSCAPE ARCHITECT AND APPROVED BY WCA/ANF

MATERIALS LEGEND

- DECOMPOSED GRANITE
- EXPOSED AGGREGATE CONCRETE
- ASPHALT WITH CHIP SEAL SURFACE
- COMPACTED NATURAL MINERAL SOIL
- P.A. PLANTED AREA

SCALE: 1" =16'

0 8 16 32

REVISIONS	DATE
1 BID ALTERNATES	05/16/2026
2 PLAN REVISIONS	05/16/2026
3 CXT RESTROOM	05/16/2026

WATERSHED CONSERVATION AUTHORITY
100 N OLD SAN GABRIEL CANYON ROAD
AZUSA, CA 91702
PHONE: (626) 815-1019

Lynne Dwyer
Landscape Architect
2616 NORTH FIGUEROA, SUITE A
LOS ANGELES, CA 90065
(323) 221-9500

SHEET TITLE
CONSTRUCTION PLAN

PROJECT TITLE
OAKS STAIRWAY & OVERLOOK
EAST FORK, SAN GABRIEL RIVER

LICENSED LANDSCAPE ARCHITECT
LYNNE DWYER
5/31/2027
Renewal Date
Date
LICENSE NO. 3607
STATE OF CALIFORNIA

DRAWN BY:	SH
CHECKED BY:	LD
PROJECT NO.	OS2019
DATE:	JUNE 1 2026

L-2.01

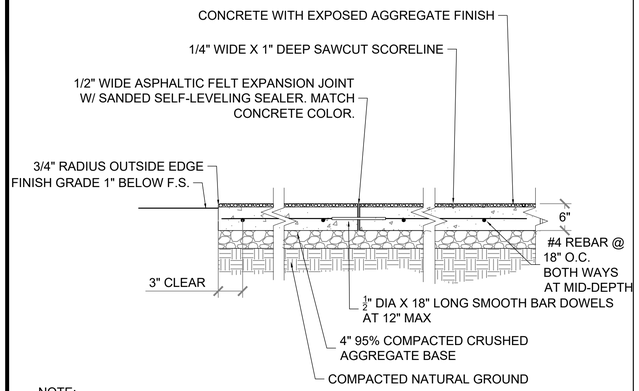

NOTE:
1. EXPANSION JOINTS SHALL BE INSTALLED A 30' MAX INTERVALS AND SCORELINE SHALL BE INSTALLED AT 10' MAX INTERVALS UNLESS OTHERWISE SPECIFIED ON LANDSCAPE PLANS.
2. CONSTRUCTION JOINTS AND EXPANSION JOINTS TO RECEIVE 1/2" RADIUS TOOLED EDGE.
3. CONCRETE AND AGGREGATE COLOR TO MATCH EXISTING NATURAL SOIL ON SITE.

A CONCRETE PAVING WITH EXPOSED AGGREGATE
Scale: 3/4" = 1'

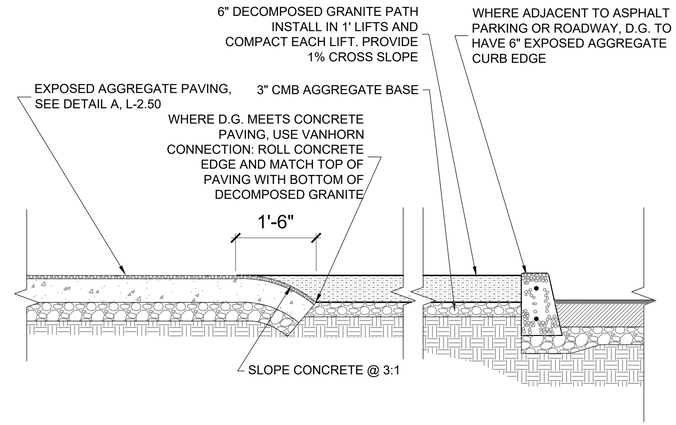

STABILIZED DECOMPOSED GRANITE AVAILABLE AT:

GAIL MATERIALS
COLOR: PYRITE GOLD
BINDER: NEX PAV BINDER
BASE: AGGREGATE BASE

B DECOMPOSED GRANITE SURFACE WITH CURB AND/OR VANHORN CONNECTION
Scale: 3/4" = 1'

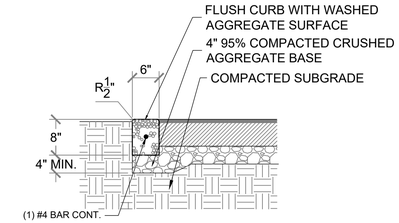

NOTES:

1. PROVIDE SCORE JOINTS AT 10'-0" O.C. AND 3/8" EXPANSION JOINTS AT 20'-0" O.C., PER DETAIL A, THIS SHEET.

C FLUSH CURB WITH WASHED AGGREGATE SURFACE
Scale: 3/4" = 1'

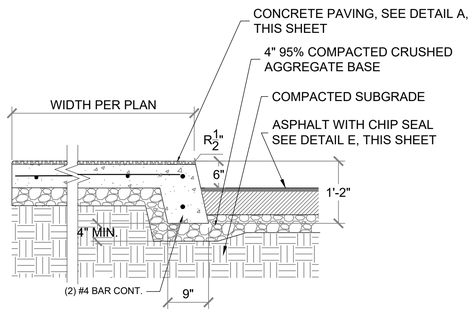

NOTE:
1. EXPANSION JOINTS SHALL BE INSTALLED A 30' MAX INTERVALS AND SCORELINE SHALL BE INSTALLED AT 10' MAX INTERVALS UNLESS OTHERWISE SPECIFIED ON LANDSCAPE PLANS.

2. CONSTRUCTION JOINTS AND EXPANSION JOINTS TO RECEIVE 1/2" RADIUS TOOLED EDGE.

D CONCRETE PATH WITH MONOLITHIC CURB
Scale: 3/4" = 1'

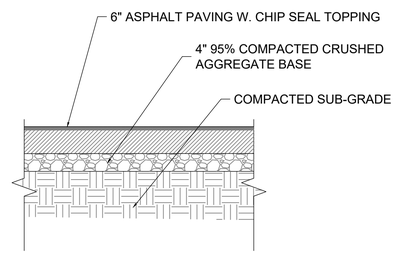

E ASPHALT WITH CHIP SEAL SURFACE
Scale: 3/4" = 1'

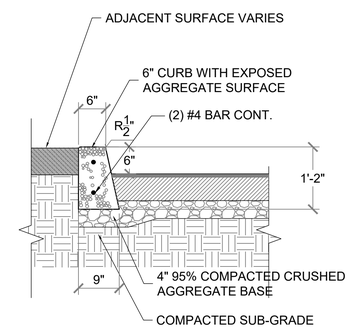

F 6" CURB WITH EXPOSED AGGREGATE SURFACE
Scale: 3/4" = 1'

NOTES:

1. BOULDERS TO BE RIVER-RUN, RIVER-ROUND CRYSTALLINE HARD-ROCK GRANITE FROM SUNBURST DECORATIVE STONE, IRWINDALE, CA
2. BOULDERS TO BE SELECTED BY LANDSCAPE ARCHITECT

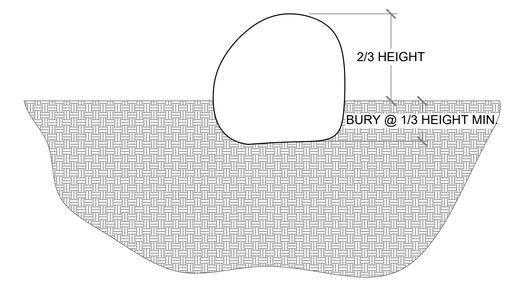

G BOULDER PLACEMENT
Scale: 3/4" = 1'

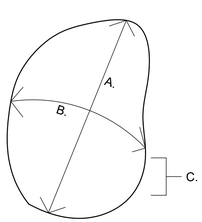

A. LONG AXIS
B. INTERMEDIATE AXIS (DIAMETER)
C. SHORT AXIS

NOTES:

1. BOULDER AND COBBLE SIZES DISPLAYED ON THE PLANS AND SPECIFICATIONS SHALL REFER TO THE INTERMEDIATE AXIS OR THE SCREEN OPENING SIZE. BOULDERS AND COBBLES CLASSIFIED ACCORDING TO WEIGHT OR SIZE OF THE LONG DIMENSION SHALL NOT SATISFY THE REQUIREMENTS OF THE PLANS DESPITE THE FACT THAT A SUPPLIER MAY SELL AND DESIGNATE THEM AS LARGER. FOR EXAMPLE, AN 18 INCH BOULDER CANNOT BE PASSED THROUGH A 18 INCH BY 18 INCH SQUARE OPENING.

DURING SELECTION THE LANDSCAPE ARCHITECT WILL MEASURE BOULDERS AND CATEGORIZE THEM ACCORDING TO THEIR INTERMEDIATE SIZE CATEGORY AT THE SUPPLIER

H BOULDER SIZING
Scale: NTS

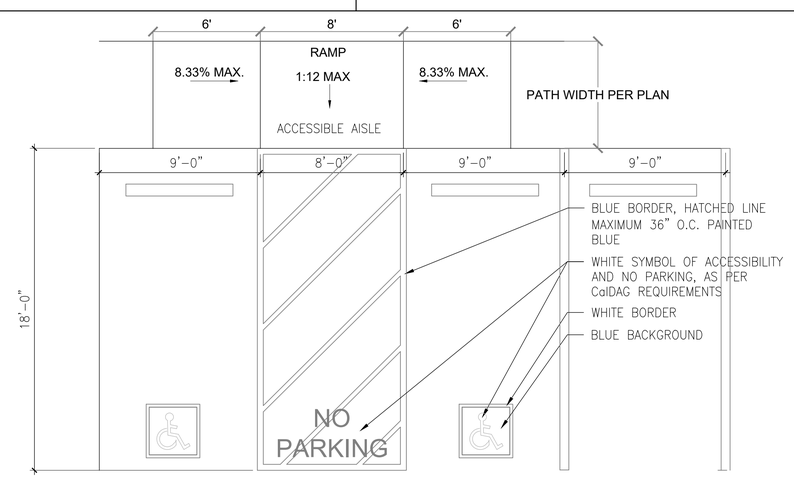

I ACCESSIBLE PARKING SPACES AND PARALLEL CURB RAMP
Scale: 1/4" = 1'

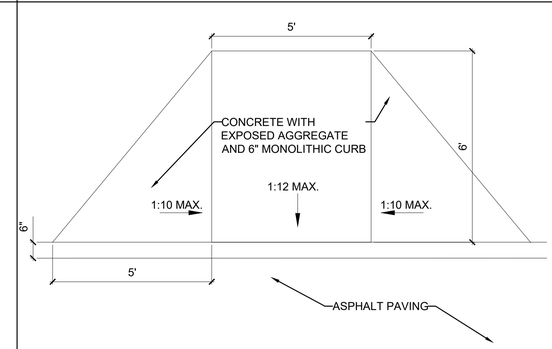

DIAL BEFORE YOU DIG
DIAL 8-1-1 FROM ANY PHONE OR
VIA WEB AT: http://www.digalert.org/digexpress.asp
DIGALERT
PLAY IT SAFE. DIAL BEFORE YOU DIG!
AT LEAST TWO WORKING DAYS PRIOR TO EXCAVATING
SERVING NINE SOUTHERN CALIFORNIA COUNTIES

J PERPENDICULAR CURB RAMP
Scale: NTS

REVISIONS	DATE
1 BID ALTERNATES	05/16/2026
2 PLAN REVISIONS	05/16/2026
3 CXT RESTROOM	05/16/2026

WATERSHED CONSERVATION AUTHORITY
100 N OLD SAN GABRIEL CANYON ROAD
AZUSA, CA 91702
PHONE: (626) 815-1019

Lynne Dwyer Landscape Architect
2616 NORTH FIGUEROA, SUITE A
LOS ANGELES, CA 90065
(323) 221-9500

SHEET TITLE: CONSTRUCTION DETAILS

PROJECT TITLE: OAKS STAIRWAY & OVERLOOK
EAST FORK, SAN GABRIEL RIVER

LICENSED LANDSCAPE ARCHITECT LYNNE DWYER Signature 5/31/2027 Renewal Date LICENSE NO. 3603 STATE OF CALIFORNIA

DRAWN BY:	KT
CHECKED BY:	LD
PROJECT NO.	OS2019
DATE:	JUNE 1 2026

L-2.50

NOTES:

1. EXPOSED SIDE OF STEPS TO BE FACED IN STONE PER DETAIL E, THIS SHEET

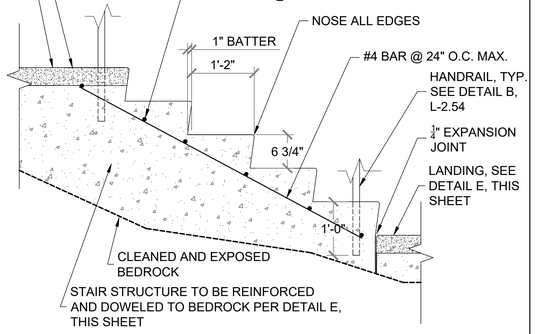

A CONCRETE STEPS @ RIVER ACCESS
Scale: NTS

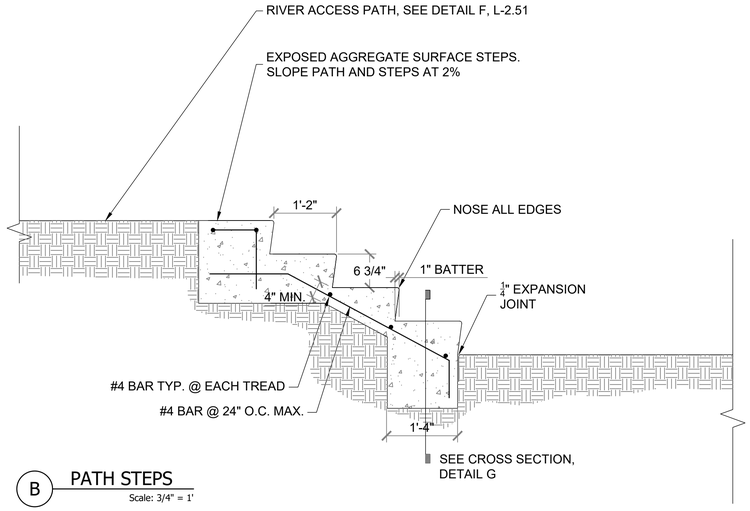

B PATH STEPS
Scale: 3/4" = 1'

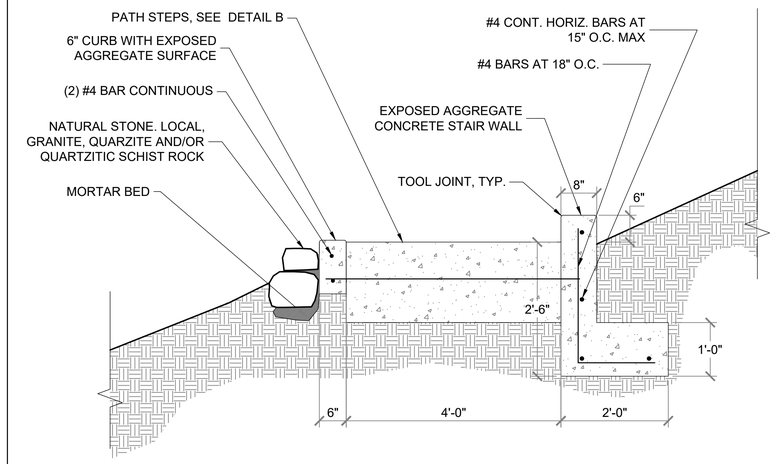

C CROSS SECTION OF PATH STEPS
Scale: 3/4" = 1'

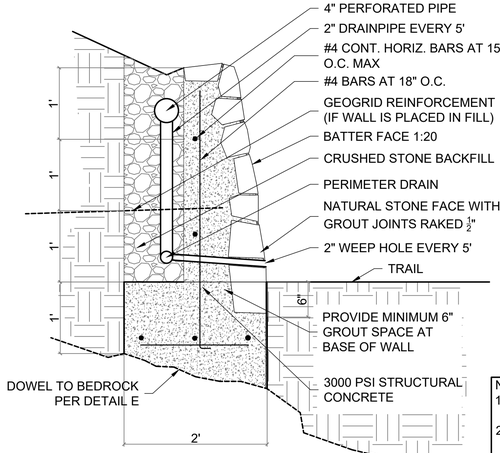

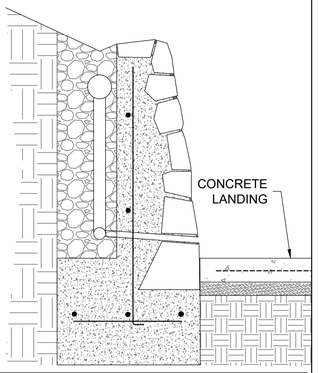

NOTES:
1. RETAINING WALL IS NOT SHOWN ON PLAN. TO BE USED AS REQUIRED BY FIELD CONDITIONS.
2. SEE NOTES ON STONE FACING, DETAIL G, THIS SHEET.
3. SEE TRAIL ACCESS PROFILE #1, SHEET C-3.01

D 1' - 4' MASONRY RETAINING WALL AT ACCESS RAMP & STAIRS
SCALE: 1" = 1'

NOTES:

1. SEE NOTES ON STONE FACING, DETAIL G, THIS SHEET
2. WHERE BEDROCK IS NOT ENCOUNTERED, REFER TO CHART BELOW FOR FOUNDATION RECOMMENDATIONS.

GEOTECHNICAL RECOMMENDATIONS FOR FOUNDATION DESIGN

Design Parameter	"Very Low" Expansion Potential 0≤EI≤20
Foundation Depth or Minimum Perimeter Beam Depth (inches below the lowest adjacent grade)	12
Minimum Foundation Width (inches)*	12
Minimum Footing Reinforcement for Continuous Footings, Grade Beams and Retaining Wall Footings	Two No. 4 reinforcing bars, one placed near the top and one near the bottom

*Code minimums per Table 1809.7 of the 2013 CBC

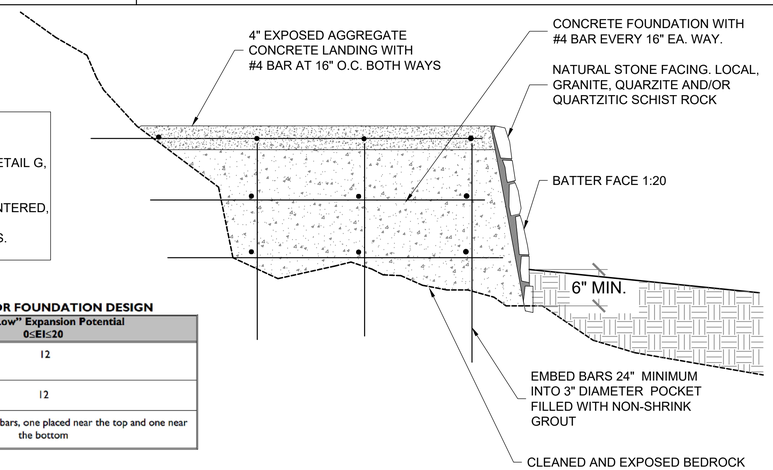

E CONCRETE LANDING WITH STONE FACE AND EXPOSED AGGREGATE SURFACE
SCALE: 1" = 1'

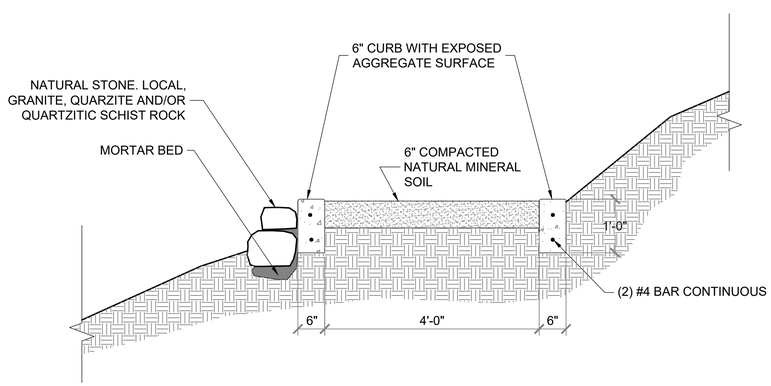

F RIVER ACCESS PATH WITH COMPACTED NATURAL MINERAL SOIL
Scale: 3/4" = 1'

NOTES ON STONE FACING AT STEPS AND LANDINGS:

- STONE FACING AT STEPS AND LANDINGS TO BE AESTHETICALLY CONSISTENT WITH EXAMPLES SHOWN ABOVE. IMAGES WERE CAPTURED ON SHOEMAKER CANYON ROAD
- USE NATURAL STONE. LOCAL, GRANITE, QUARTZITE AND/OR QUARTZITIC SCHIST ROCK
- ROCK TO BE APPROVED BY LANDSCAPE ARCHITECT
- BATTER STONE FACING 1:20
- MATCH MORTAR TO EXISTING RIVER WALL ON SITE
- MERGE STONE MASONRY WORK SEAMLESSLY INTO EXISTING BEDROCK, WHERE APPLICABLE.
- MAINTAIN TOP OF WALL ELEVATIONS WHERE GRADES CHANGE AND MERGE WALL SEAMLESSLY INTO THE EXISTING SURFACE ELEVATION.

G STONE FACING AT STEPS AND LANDINGS
Scale: NTS

DIAL BEFORE YOU DIG
DIAL 8-1-1 FROM ANY PHONE OR
VIA WEB AT: http://www.digalert.org/digexpress.asp
DIGALERT
PLAY IT SAFE. DIAL BEFORE YOU DIG!
AT LEAST TWO WORKING DAYS PRIOR TO EXCAVATING
SERVING NINE SOUTHERN CALIFORNIA COUNTIES

REVISIONS	DATE
1 BID ALTERNATES	05/16/2026
2 PLAN REVISIONS	05/16/2026
3 CXT RESTROOM	05/16/2026

WATERSHED CONSERVATION AUTHORITY
100 N OLD SAN GABRIEL CANYON ROAD
AZUSA, CA 91702
PHONE: (626) 815-1019

Lynne Dwyer Landscape Architect
2616 NORTH FIGUEROA, SUITE A
LOS ANGELES, CA 90065
(323) 221-9500

SHEET TITLE
CONSTRUCTION DETAILS

PROJECT TITLE
OAKS STAIRWAY & OVERLOOK
EAST FORK, SAN GABRIEL RIVER

LICENSED LANDSCAPE ARCHITECT LYNNE DWYER
Signature
5/31/2027
Renewal Date
LICENSE NO. 1603 STATE OF CALIFORNIA

DRAWN BY:	KT
CHECKED BY:	LD
PROJECT NO.	OS2019
DATE:	JUNE 1 2026

L-2.51

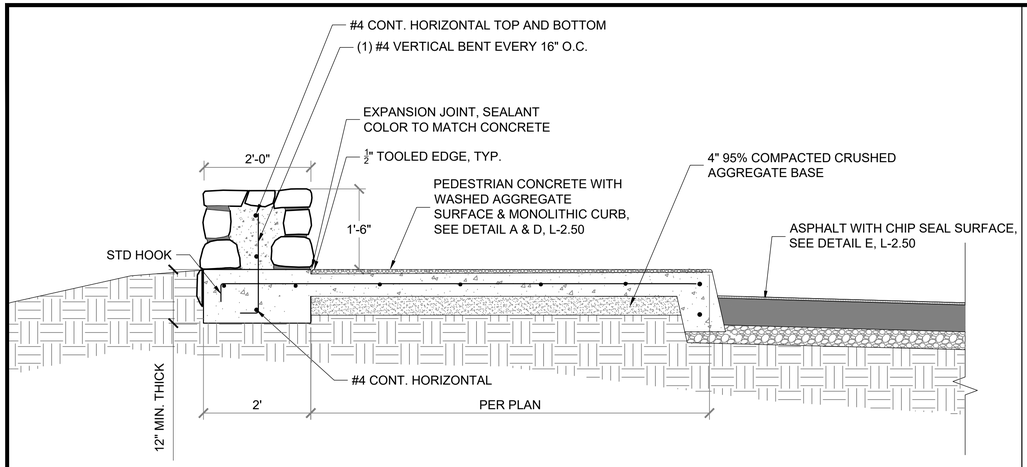

A ROCK BARRIER WALL & RIVER OVERLOOK PATH

Scale: 3/4" = 1'

A. IF REQUIRED, PROVIDE TEMPORARY BRACING DURING INSTALLATION OF MASONRY WORK. MAINTAIN BRACING IN PLACE UNTIL BUILDING STRUCTURE PROVIDES PERMANENT SUPPORT.

B. PATTERN:

1. BUNCHING OF SMALL ROCKS OR ROCKS OF THE SAME DIMENSION IS NOT PERMITTED
2. NO MORE THAN 10% OF STONE SHOULD BE OF EQUAL DIMENSION.
3. INDIVIDUAL STONES SHOULD HAVE HEIGHTS BETWEEN 6 AND 12 INCHES.
4. INDIVIDUAL STONES SHOULD HAVE LENGTHS BETWEEN 6 AND 18 INCHES.

C. JOINING WORK: WHERE FRESH MASONRY JOINTS PARTIALLY SET MASONRY.

1. REMOVE LOOSE STONE AND MORTAR.
2. CLEAN AND LIGHTLY WET SURFACE OF SET MASONRY.
3. TOOTHING IS NOT PERMITTED.

D. JOINTS:

1. LAY STONE WITH WIDE MORTAR JOINTS (1" – 2" MAX.) TO REPLICATE HISTORIC STONE INSTALLATION ALONG EAST FORK. JOINT SIZE TO BE AS CONSISTENT AND UNIFORM AS POSSIBLE.
2. TOOL JOINTS WHEN "THUMB-PRINT" HARD WITH A ROUND JOINTER SLIGHTLY LARGER THAN THE WIDTH OF THE JOINT.
3. TROWEL-POINT OR CONCAVE TOOL EXTERIOR JOINTS BELOW CONTROL AND EXPANSION JOINTS: KEEP JOINTS OPEN AND FREE OF DEBRIS.

E. MATERIAL

1. SELECT NATURAL STONE. LOCAL, GRANITE, QUARZITE AND/OR QUARTZITIC SCHIST ROCK THAT MATCHES LOCAL STONE IN SHAPE AND COLOR.

B MASONRY SPECIFICATIONS FOR ROCK BARRIER WALL

Scale: NTS

SAMPLE ROCK BARRIER WALL NEAR PROJECT SITE

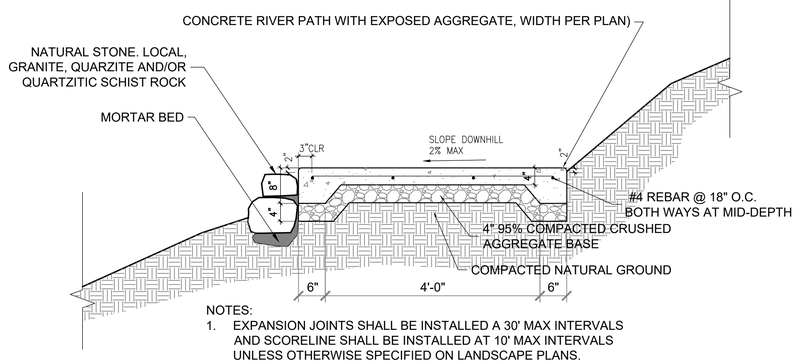

NOTES:

1. EXPANSION JOINTS SHALL BE INSTALLED A 30' MAX INTERVALS AND SCORELINE SHALL BE INSTALLED AT 10' MAX INTERVALS UNLESS OTHERWISE SPECIFIED ON LANDSCAPE PLANS.
2. CONSTRUCTION JOINTS AND EXPANSION JOINTS TO RECEIVE 1/2" RADIUS TOOLED EDGE.
3. SEE DETAIL A, SHEET 2.50 FOR EXPANSION JOINTS IN PATH.
4. CONCRETE AND AGGREGATE COLOR TO MATCH EXISTING NATURAL SOIL ON SITE.

C RIVER ACCESS PATH WITH EXPOSED AGGREGATE CONCRETE

Scale: 3/4" = 1'

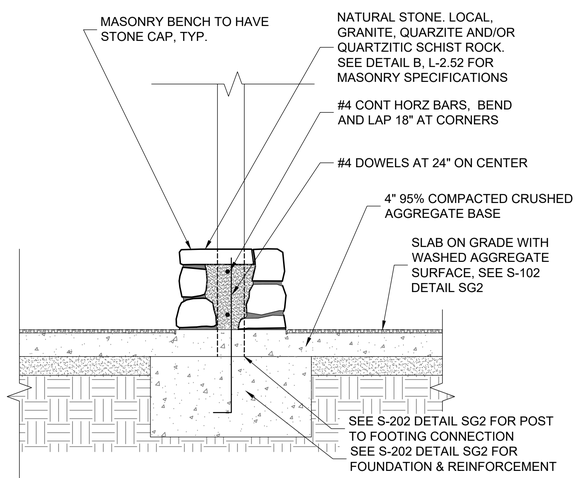

D MASONRY BENCH AT SHADE STRUCTURE & KIOSK

SCALE: 3/4" = 1'

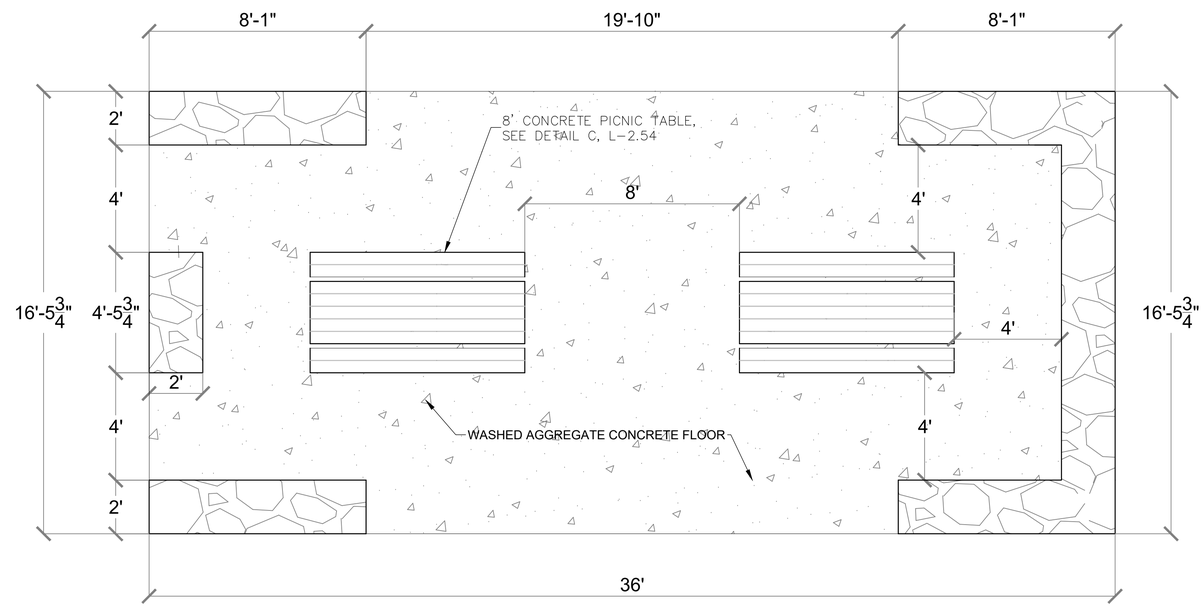

NOTES

1. DRAWING SHOWS MASONRY SEATWALL LAYOUT ONLY
2. SEE DETAIL D, L-2.52 FOR MASONRY BENCH
3. SEE STRUCTURAL PLANS FOR SHADE STRUCTURE FRAMING & FOUNDATION DETAILS

E MASONRY WALLS AT SHADE STRUCTURE

SCALE: 3/8"=1'

DIAL BEFORE YOU DIG
DIAL 8-1-1 FROM ANY PHONE OR
VIA WEB AT: http://www.digalert.org/digexpress.asp
DIGALERT
PLAY IT SAFE. DIAL BEFORE YOU DIG!
AT LEAST TWO WORKING DAYS PRIOR TO EXCAVATING
SERVING NINE SOUTHERN CALIFORNIA COUNTIES

REVISIONS	DATE
1 BID ALTERNATES	05/16/2026
2 PLAN REVISIONS	05/16/2026
3 CXT RESTROOM	05/16/2026

WATERSHED CONSERVATION AUTHORITY
100 N OLD SAN GABRIEL CANYON ROAD
AZUSA, CA 91702
PHONE: (626) 815-1019

Lynne Dwyer Landscape Architect
2616 NORTH FIGUEROA, SUITE A
LOS ANGELES, CA 90065
(323) 221-9500

SHEET TITLE: CONSTRUCTION DETAILS

PROJECT TITLE: OAKS STAIRWAY & OVERLOOK
EAST FORK, SAN GABRIEL RIVER

LICENSED LANDSCAPE ARCHITECT
LYNNE DWYER
Signature
5/31/2027
Renewal Date
LICENSE NO. 1603
STATE OF CALIFORNIA

DRAWN BY:	KT
CHECKED BY:	LD
PROJECT NO.	OS2019
DATE:	JUNE 1 2026

L-2.52

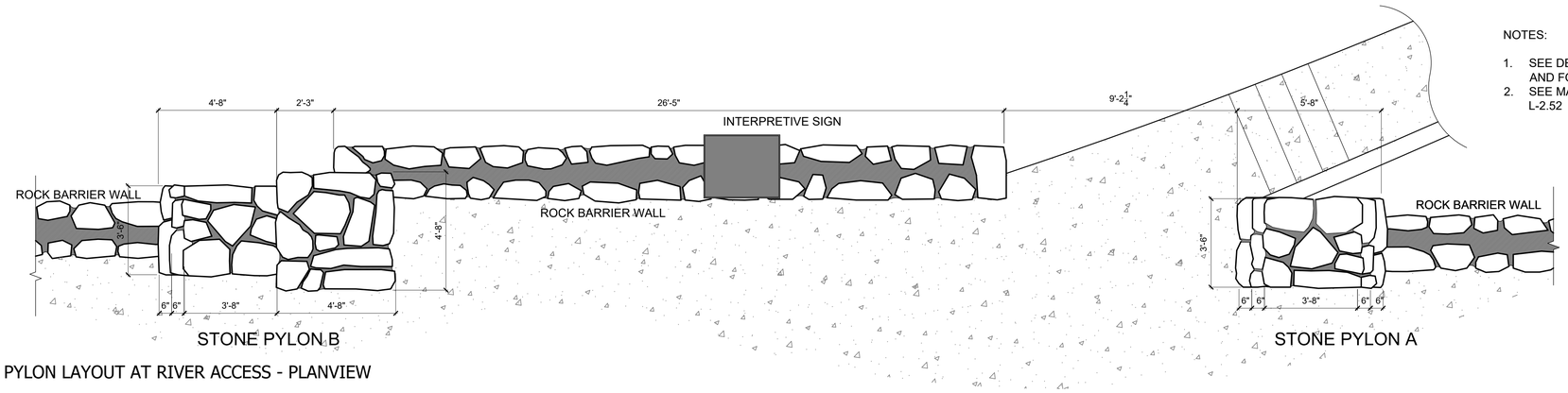

NOTES:

1. SEE DETAIL B, L-2.52 FOR REINFORCEMENT AND FOUNDATION.
2. SEE MASONRY SPECIFICATIONS, DETAIL B, L-2.52

A MASONRY WALL & PYLON LAYOUT AT RIVER ACCESS - PLANVIEW

Scale: 3/8" = 1'

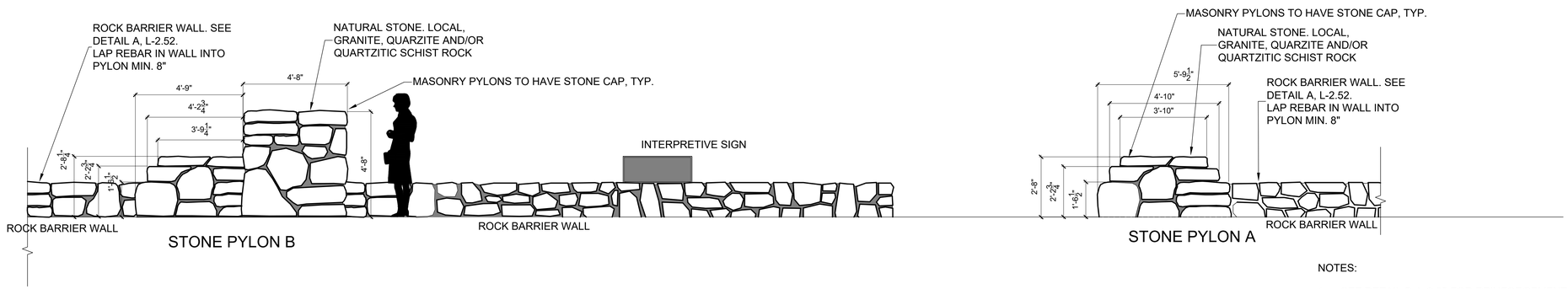

NOTES:

1. SEE DETAIL B, L-2.52 FOR REINFORCEMENT AND FOUNDATION.
2. SEE MASONRY SPECIFICATIONS, DETAIL B, L-2.52

B MASONRY WALL & PYLON LAYOUT AT RIVER ACCESS - ELEVATION

Scale: 3/8" = 1'

NOTE:

SEE MASONRY SPECIFICATIONS, DETAIL B, L-2.52

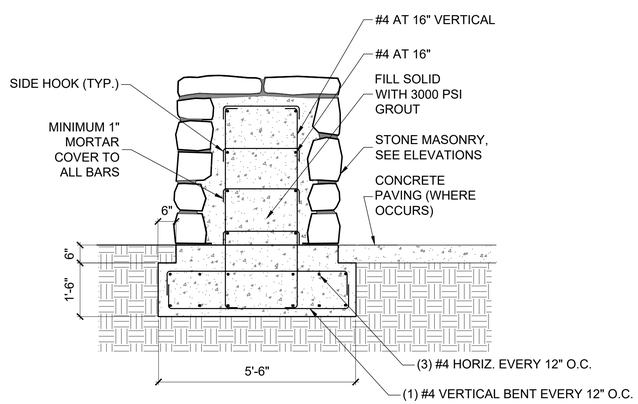

C TYPICAL FOUNDATION AND REINFORCMENT OF MASONRY PYLON

Scale: 1/2" = 1'

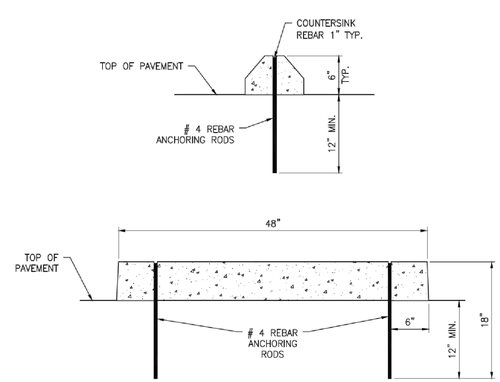

D 4' PRE-CAST REINFORCED WHEEL STOP

Scale: NTS

DIAL BEFORE YOU DIG

DIAL 8-1-1 FROM ANY PHONE OR
VIA WEB AT: http://www.digalert.org/digexpress.asp

DIGALERT

PLAY IT SAFE. DIAL BEFORE YOU DIG!

AT LEAST TWO WORKING DAYS PRIOR TO EXCAVATING

SERVING NINE SOUTHERN CALIFORNIA COUNTIES

REVISIONS	DATE
1 BID ALTERNATES	05/16/2026
2 PLAN REVISIONS	05/16/2026
3 CXT RESTROOM	05/16/2026

WATERSHED CONSERVATION AUTHORITY
100 N OLD SAN GABRIEL CANYON ROAD
AZUSA, CA 91702
PHONE: (626) 815-1019

Lynne Dwyer Landscape Architect
2616 NORTH FIGUEROA, SUITE A
LOS ANGELES, CA 90065
(323) 221-9500

SHEET TITLE

CONSTRUCTION DETAILS

PROJECT TITLE

OAKS STAIRWAY & OVERLOOK
EAST FORK, SAN GABRIEL RIVER

LICENSED LANDSCAPE ARCHITECT
LYNNE DWYER
Signature
5/31/2027
Renewal Date
LICENSE NO. 3603
STATE OF CALIFORNIA

DRAWN BY:	KT
CHECKED BY:	LD
PROJECT NO.	OS2019
DATE:	JUNE 1 2026

L-2.53

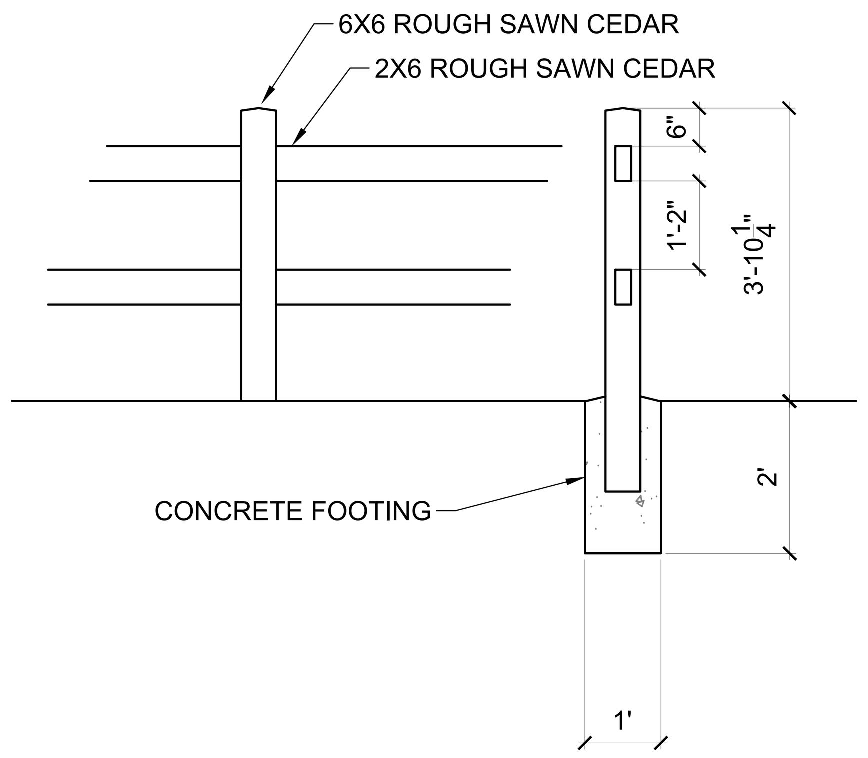

(A) SPLIT RAIL FENCE
Scale: NTS

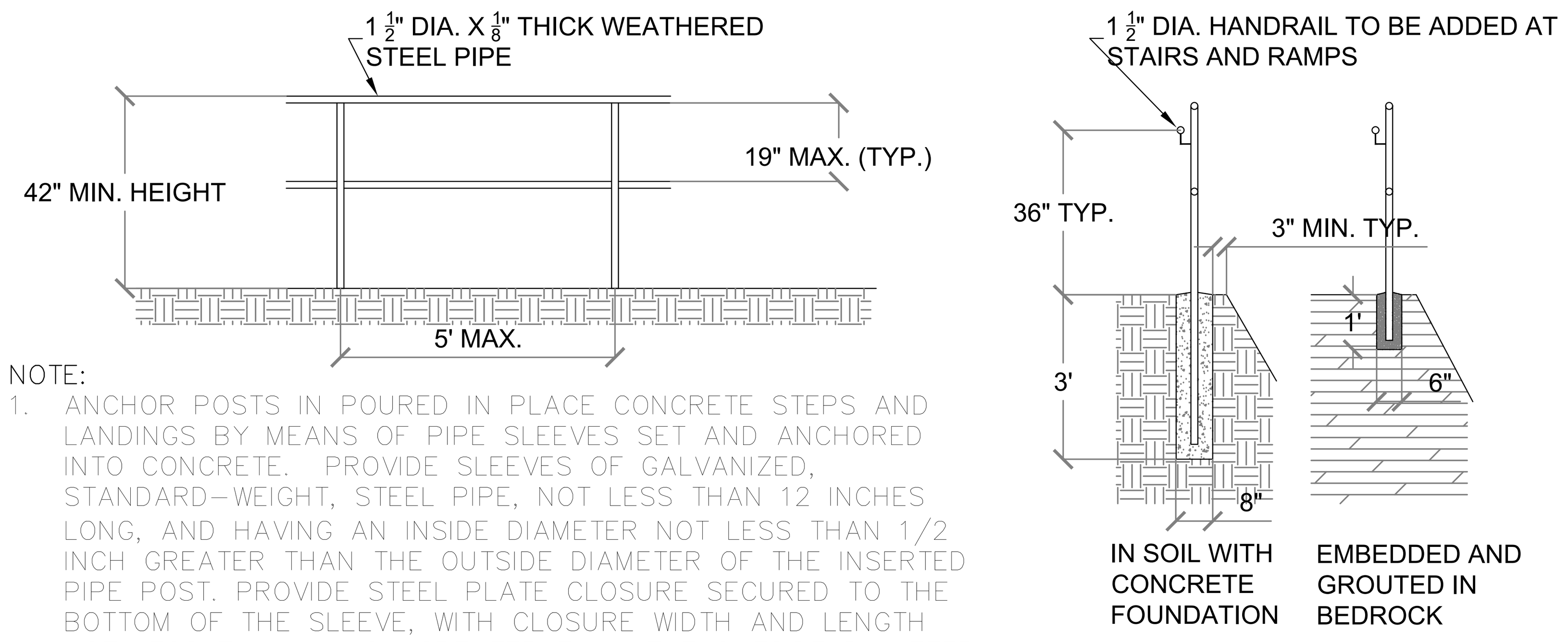

NOTE:
1. ANCHOR POSTS IN POURED IN PLACE CONCRETE STEPS AND LANDINGS BY MEANS OF PIPE SLEEVES SET AND ANCHORED INTO CONCRETE. PROVIDE SLEEVES OF GALVANIZED, STANDARD-WEIGHT, STEEL PIPE, NOT LESS THAN 12 INCHES LONG, AND HAVING AN INSIDE DIAMETER NOT LESS THAN 1/2 INCH GREATER THAN THE OUTSIDE DIAMETER OF THE INSERTED PIPE POST. PROVIDE STEEL PLATE CLOSURE SECURED TO THE BOTTOM OF THE SLEEVE, WITH CLOSURE WIDTH AND LENGTH NOT LESS THAN 1 INCH GREATER THAN THE OUTSIDE DIAMETER OF THE SLEEVE. AFTER POSTS HAVE BEEN INSERTED INTO SLEEVES, FILL THE ANNULAR SPACE BETWEEN THE POST AND SLEEVE WITH NONSHRINK GROUT OR A QUICK-SETTING HYDRAULIC CEMENT. COVER ANCHORAGE JOINT WITH A ROUND STEEL FLANGE WELDED TO THE POST.
2. ANCHOR POSTS INTO SOIL OR BEDROCK AS SHOWN IN THIS DETAIL
3. ALL ENDS TO BE CAPPED
4. GRIND ALL WELDS AND SHARP EDGES SMOOTH
5. USE A588 ROD FOR WEATHERED STEEL WELDS

(B) STEEL HANDRAIL
Scale: 3/8" = 1'

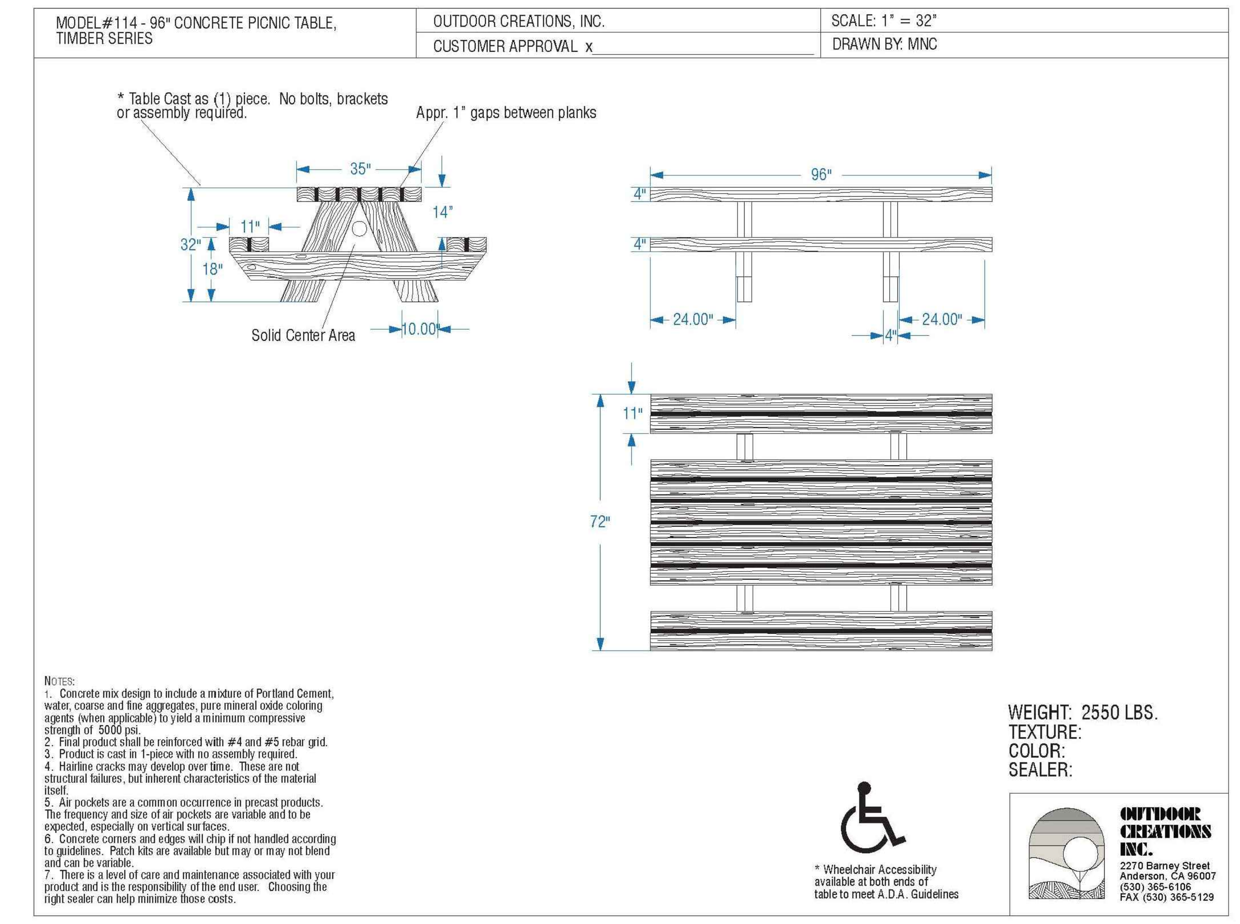

(C) 8' CONCRETE PICNIC TABLE
Scale: NTS

SELECT DESIRED BOLLARD MATERIAL (4" NOMINAL SIZE):
- ☐ SSP04000 SCH 10 STAINLESS STEEL
- ☐ SSP04040 SCH 40 STAINLESS STEEL
- ☐ SSP04080 SCH 80 STAINLESS STEEL
- ☒ IBP04040 SCH 40 ASTM A-53 CARBON STEEL
- ☐ IBP04080 SCH 80 ASTM A-53 CARBON STEEL

SELECT DESIRED CARBON STEEL BOLLARD FINISH:
- ☐ POWDERCOAT RAL # ________
- ☐ AS SPECIFIED ________

SELECT DESIRED BOLLARD CAP STYLE:
- ☐ DOME
- ☒ STANDARD FLAT
- ☐ VIKING
- ☐ KNIGHT

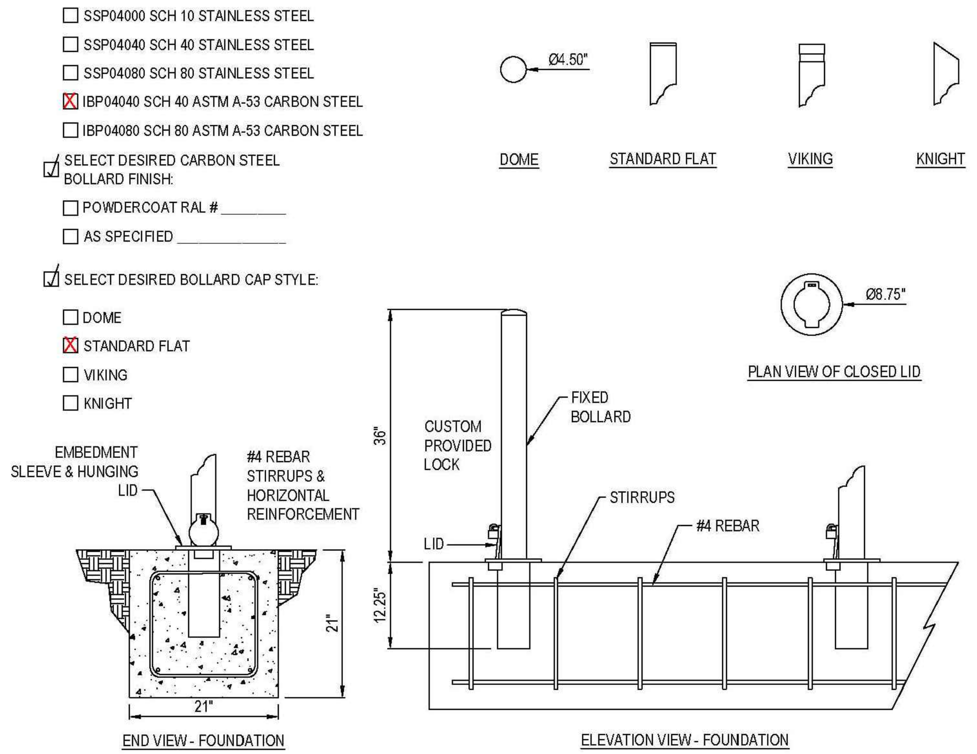

NOTES:
1. INSTALLATION TO BE COMPLETED IN ACCORDANCE WITH MANUFACTURER'S SPECIFICATIONS.
2. DO NOT SCALE DRAWING.
3. THIS DRAWING IS INTENDED FOR USE BY ARCHITECTS, ENGINEERS, CONTRACTORS, CONSULTANTS AND DESIGN PROFESSIONALS FOR PLANNING PURPOSES ONLY. THIS DRAWING MAY NOT BE USED FOR CONSTRUCTION.
4. ALL INFORMATION CONTAINED HEREIN WAS CURRENT AT THE TIME OF DEVELOPMENT BUT MUST BE REVIEWED AND APPROVED BY THE PRODUCT MANUFACTURER TO BE CONSIDERED ACCURATE.
5. CONTRACTOR'S NOTE: FOR PRODUCT AND COMPANY INFORMATION VISIT www.CADdetails.com/info AND ENTER REFERENCE NUMBER 2905-022.

(D) CALPIPE REMOVABLE 4" STEEL BOLLARD
Scale: NTS

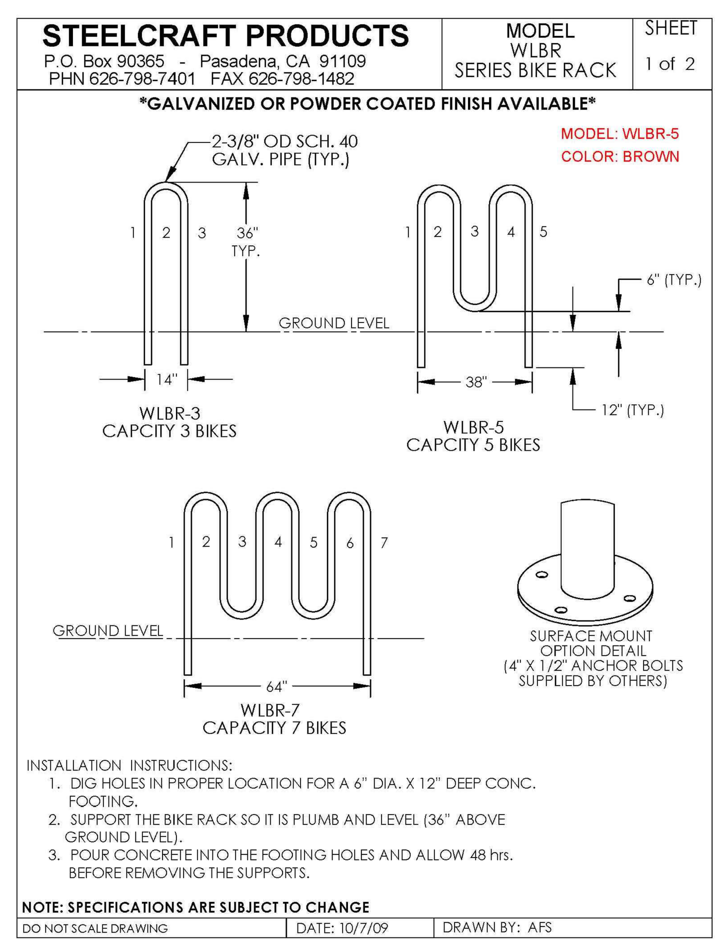

(E) BIKE RACK
Scale: NTS

SELECT DESIRED BOLLARD MATERIAL (4" NOMINAL SIZE):
- ☐ SSF04000 SCH 10 STAINLESS STEEL
- ☐ SSF04040 SCH 40 STAINLESS STEEL
- ☐ SSF04080 SCH 80 STAINLESS STEEL
- ☒ IBF04040 SCH 40 ASTM A-53 CARBON STEEL
- ☐ IBF04080 SCH 80 ASTM A-53 CARBON STEEL

SELECT DESIRED CARBON STEEL BOLLARD FINISH:
- ☐ POWDERCOAT RAL # ________
- ☐ AS SPECIFIED ________

SELECT DESIRED BOLLARD CAP STYLE:
- ☐ DOME
- ☒ STANDARD FLAT
- ☐ VIKING
- ☐ KNIGHT

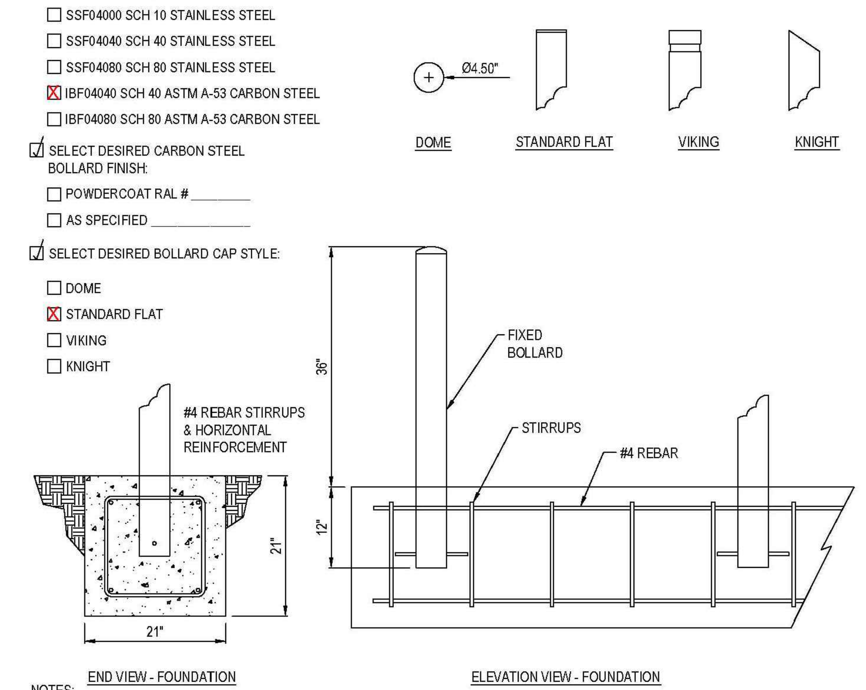

NOTES:
1. INSTALLATION TO BE COMPLETED IN ACCORDANCE WITH MANUFACTURER'S SPECIFICATIONS.
2. DO NOT SCALE DRAWING.
3. THIS DRAWING IS INTENDED FOR USE BY ARCHITECTS, ENGINEERS, CONTRACTORS, CONSULTANTS AND DESIGN PROFESSIONALS FOR PLANNING PURPOSES ONLY. THIS DRAWING MAY NOT BE USED FOR CONSTRUCTION.
4. ALL INFORMATION CONTAINED HEREIN WAS CURRENT AT THE TIME OF DEVELOPMENT BUT MUST BE REVIEWED AND APPROVED BY THE PRODUCT MANUFACTURER TO BE CONSIDERED ACCURATE.
5. CONTRACTOR'S NOTE: FOR PRODUCT AND COMPANY INFORMATION VISIT www.CADdetails.com/info AND ENTER REFERENCE NUMBER 2905-015.

(F) CALPIPE FIXED 4" STEEL BOLLARD
Scale: NTS

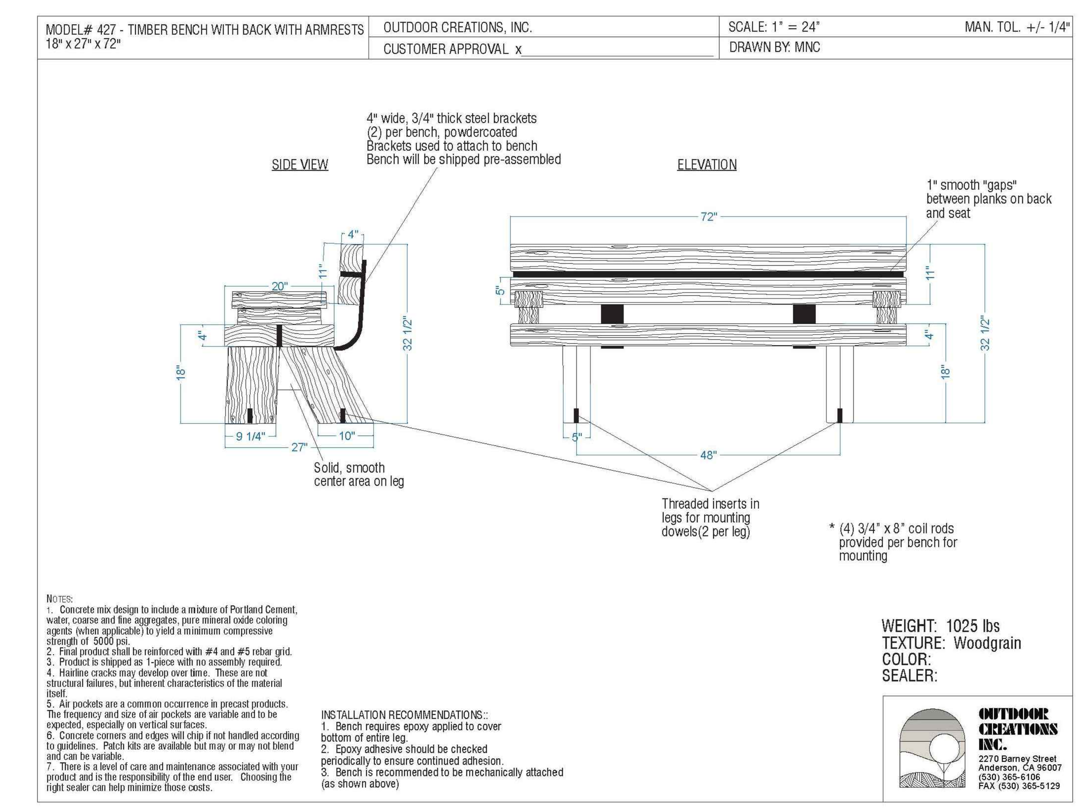

(G) 72" CONCRETE BENCH
Scale: NTS

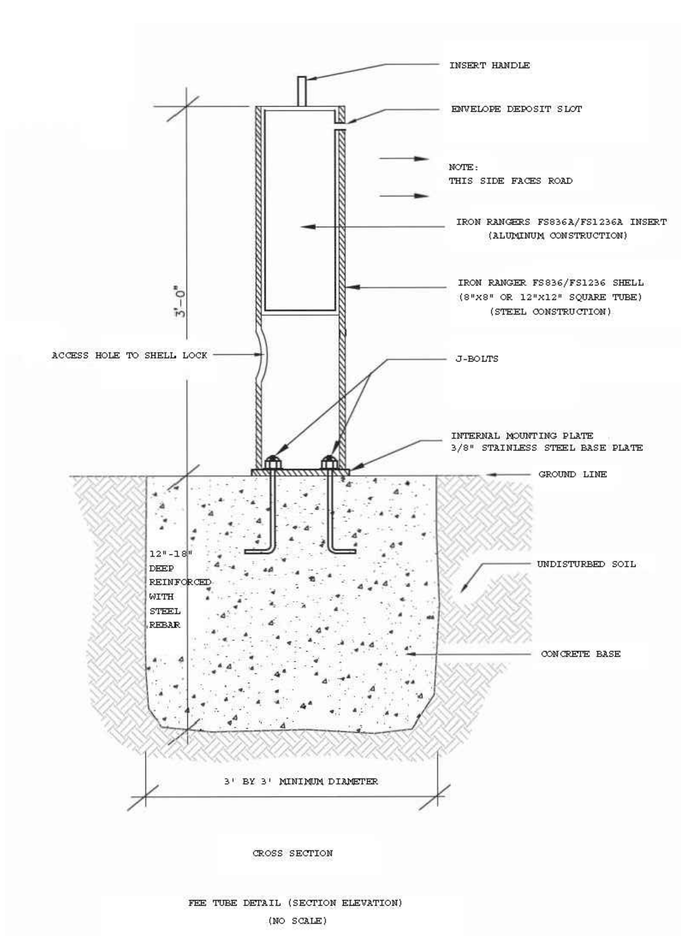

(H) IRON RANGER
Scale: NTS

Standard Mounting Suggestions

If you are mounting in **new concrete**, we suggest a 3' x 3' x 12" to 18" deep pad. Reinforced with steel rebar. Use the base plate pattern to locate the J bolts in the fresh, uncured concrete. We recommend 5/8" thread x 12" long J bolts. Make sure you allow for the 3/8" base plate thickness when setting the bolts in the concrete. You also don't want them so long that you can't get a deep socket down to the bottom of the shell. Let the concrete cure per the manufacturers recommendations. Place the shell on the J bolts and bolt them down with nuts/washers to fit the bolts used. You will need a short ratchet and a few long extensions to get down to the bolts. Double sided tape is recommended to hold the nut in place on the extension/ratchet.

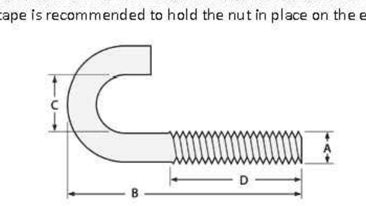

If you are mounting in **existing concrete**, we suggest that the concrete area be as large as a new concrete pad would be, 3' x 3' x12" to 18" deep. Use the bolt pattern provided to drill and install the expansion bolts. We recommend 5/8" thread x 12" long bolt. To install in existing concrete, drill for use of expansion bolts. It is suggested that new concrete be reinforced with steel rebar and that the surface area be large enough that any attempt by a vandal to push the shell over with a vehicle will bring the concrete up under the vehicle and possibly disable the vehicle or discourage the vandal.

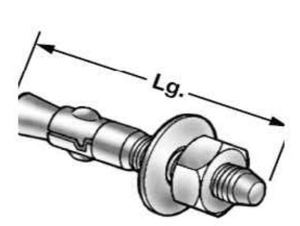

These are also known as wedge stud anchors. Place the shell on the expansion bolts and attach with nuts/washers to mate the bolts. You will need a short ratchet and a few long extensions to get down to the bolts.

The chain plate can be tipped up against the inside wall to allow easy access to the base plate.

We suggest using a socket extension which will help the installation go easier. Also, you may wish to tape the nut onto the socket extension to prevent the nut from falling into the shell during the installation process.

Iron Rangers
Toll Free (800) 262-3322 Fax: (509) 326-5436
ironrangerfeesafe@yahoo.com
http://ironrangersllc.com

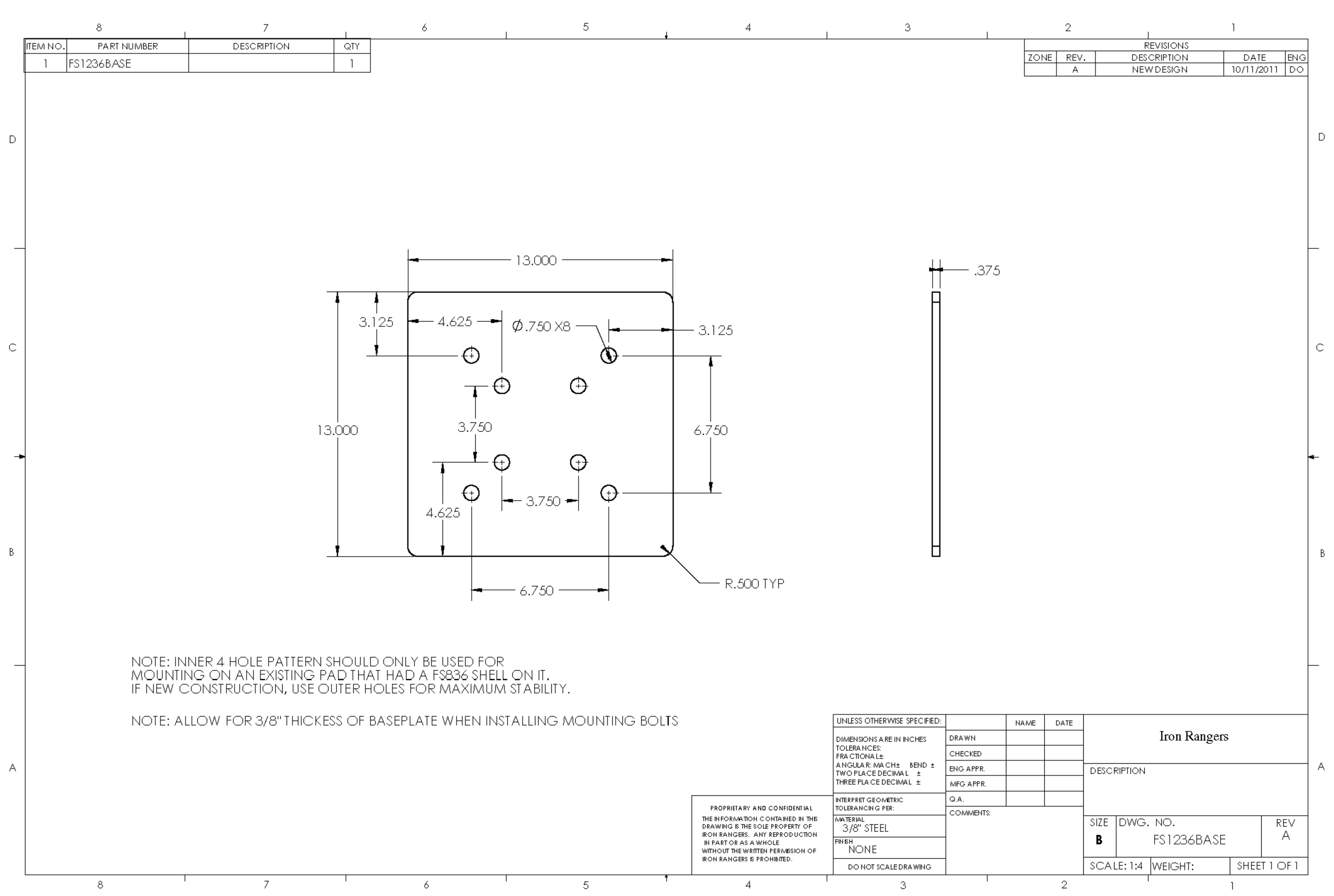

Installation Instructions for FS836 and FS1236/FS1225 Shells

Both model shells have base plates with four internal 3/4" diameter holes so the mounting is inaccessible from the outside of the shell when the insert is locked in place. FS1236/FS1225 shells also have the FS836 hole pattern so they can be interchangeable with an FS836 mounting pad.

To install in fresh concrete, threaded anchor bolts are required. To install in existing concrete, drill for use of expansion bolts. When setting the anchor bolt height, remember that the shell base plate is 3/8" thick and allow for that thickness so you leave enough threads for the nuts. Installation of the nuts will require a short ratchet and long extension. See standard mounting suggestions section below for more details.

It is suggested that new concrete be reinforced with steel rebar and that the surface area be large enough that any attempt by a vandal to push the shell over with a vehicle will bring the concrete up under the vehicle and possibly disable the vehicle or discourage the vandal.

Each shell has a key catch (or chain plate) attached under the lock area of shell, accessible through the round hole in the back of the shell. The key catch also serves as a barrier to reduce the possibility of animals nesting in the base of the shell.

The recommended lock that should be used is a standard 3/8" diameter with 7/8" shackle height or a round padlock.

DIAL BEFORE YOU DIG
DIAL 8-1-1 FROM ANY PHONE OR
VIA WEB AT: http://www.digalert.org/digexpress.asp
DIGALERT
PLAY IT SAFE. DIAL BEFORE YOU DIG!
AT LEAST TWO WORKING DAYS PRIOR TO EXCAVATING
SERVING NINE SOUTHERN CALIFORNIA COUNTIES

REVISIONS	DATE
1 BID ALTERNATES	05/16/2026
2 PLAN REVISIONS	05/16/2026
3 CXT RESTROOM	05/16/2026

WATERSHED CONSERVATION AUTHORITY
100 N OLD SAN GABRIEL CANYON ROAD
AZUSA, CA 91702
PHONE: (626) 815-1019

Lynne Dwyer
Landscape Architect
2616 NORTH FIGUEROA, SUITE A
LOS ANGELES, CA 90065
(323) 221-9500

SHEET TITLE
SHADE TRELLIS & KIOSK DETAILS

PROJECT TITLE
OAKS STAIRWAY & OVERLOOK
EAST FORK, SAN GABRIEL RIVER

LICENSED LANDSCAPE ARCHITECT LYNNE DWYER
Signature
5/31/2027
Renewal Date
LICENSE NO. 3607
STATE OF CALIFORNIA

DRAWN BY:	KT
CHECKED BY:	LD
PROJECT NO.	OS2019
DATE:	JUNE 1 2026

L-2.54

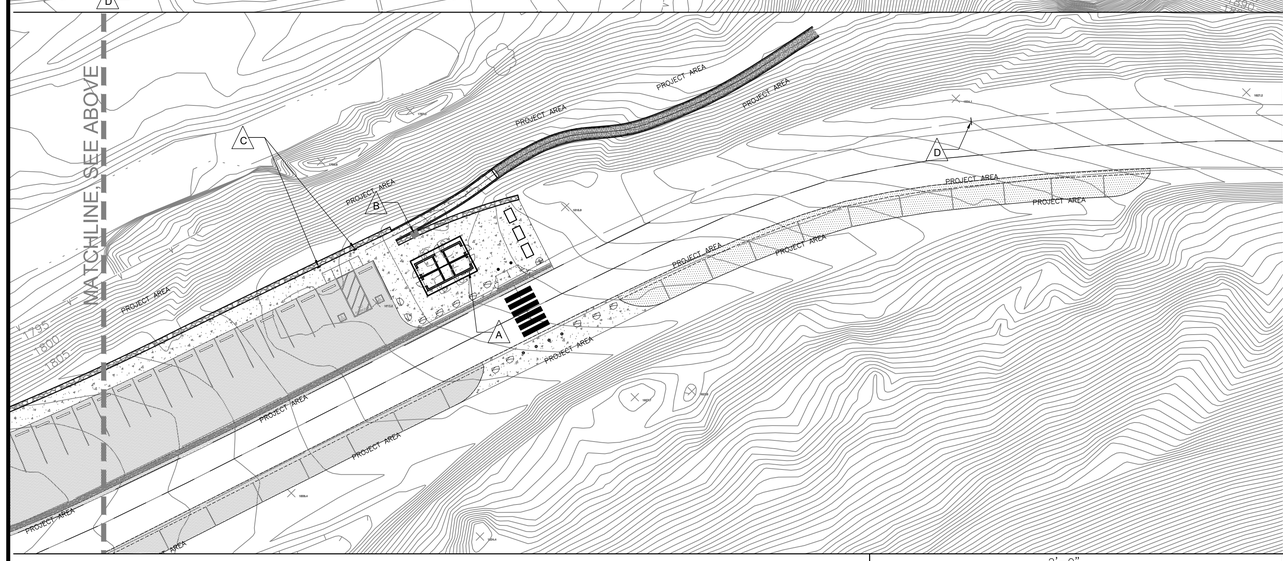

INTERPRETIVE SIGNAGE LEGEND

1. LARGE ANGELES NATIONAL FOREST MAP, COLOR, FIBERGLASS EMBEDMENT 24"X36", SEE DETAIL D SHEET L-3.50
2. ANODIZED ALUMINUM SIGN WITH METALPHOTO FINISH, "SANTA ANA SUCKER", 18"X24, MASONRY MOUNT BASE, SEE DETAILS B & E SHEET L-3.50
3. METAL CUTOUTS OF SANTA SUCKER EMBEDDED IN CEMENT SEEDED WITH COLOR AGGREGATES IN GROUND IN FRONT OF SIGN, , SEE DETAIL H SHEET L-3.50
4. ANODIZED ALUMINUM SIGN WITH METALPHOTO FINISH, "MOUNTAIN YELLOW-LEGGED FROG", 18"X24," MASONRY MOUNT BASE, SEE DETAILS B & F SHEET L-3.50
5. METAL CUTOUTS OF MOUNTAIN YELLOW-LEGGED FROG EMBEDDED IN CEMENT SEEDED WITH COLOR AGGREGATES IN GROUND IN FRONT OF SIGN, SEE DETAIL H SHEET L-3.50
6. "PROTECT THE EAST FORK" POSTER SIGN, COLOR, FIBERGLASS EMBEDMENT 24"X36", SEE DETAIL C SHEET L-3.50
7. KIOSK WITH SIGNAGE, SEE DETAIL A SHEET L-3.50
8. ANODIZED ALUMINUM SIGN WITH METALPHOTO FINISH, "TBD", 18"X24, MASONRY MOUNT BASE, SEE DETAILS B SHEET L-3.50 AND C SHEET L-3.00
9. METAL CUTOUTS OF TBD EMBEDDED IN CEMENT SEEDED WITH COLOR AGGREGATES IN GROUND IN FRONT OF SIGN, SEE DETAIL H SHEET L-3.50

REGULATORY SIGNAGE LEGEND

- A — TRASH BAG DISPENSER SIGN, SEE DETAIL I SHEET L-3.50
- B — REGULATORY SIGNAGE (BY ANF), SEE DETAILS A & G SHEET L-3.50
- C — ABA PARKING SIGN, SEE DETAIL A SHEET L-3.00
- D — PEDESTRIAN WARNING SIGN, SEE DETAIL B SHEET L-3.00

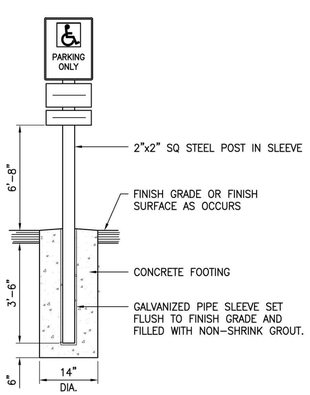

SIGN: RESERVED PARKING (ACCESSIBLE)
COUNT: 2
MANUFACTURER: ZUMAR
12" W x 18" H, ALUMINUM SIGN
MATERIAL: .080 EG REFLECTIVE ALUMINUM
MOUNTING HARDWARE: TAMPERPROOF
POST:2"X2" SQ STEEL POST
MATERIAL: GALVANIZED
LENGTH: PER DETAIL

A — ADA PARKING SIGN
Scale: NTS

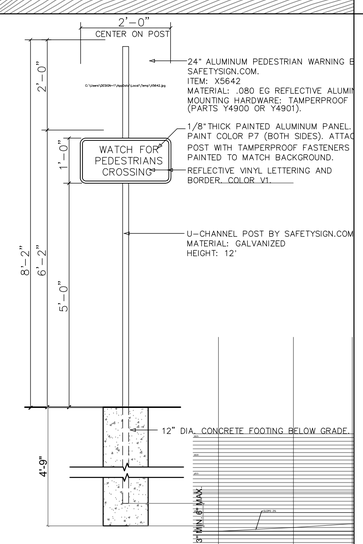

B — PEDESTRIAN WARNING SIGN
Scale: NTS

SIGN WILL BE SIMILAR IN DESIGN AND INTENT AS THE SANTA ANA SUCKER DISPLAY. IMAGES AND TEXT WILL INTERPRET THE TBD

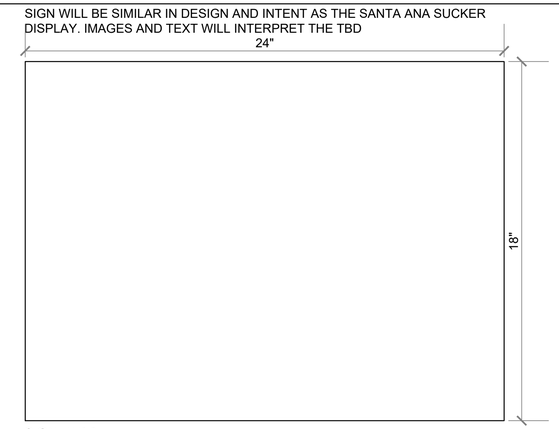

SIGN: "TBD"
MATERIAL: ANODIZED ALUMINUM .020" WITH METALPHOTO FINISH MATTE
SIZE: 18" X 24"
COUNT: 1
MOUNT: PERMANENT PRESSURE-SENSITIVE ADHESIVE MOUNT TO PANNIER GRAPHICS MASONRY MOUNT EXHIBIT BASE

C — "TBD"
Scale: NTS

SCALE: 1" = 30'
0 15 30 60

REVISIONS	DATE
1 BID ALTERNATES	05/16/2026
2 PLAN REVISIONS	05/16/2026
3 CXT RESTROOM	05/16/2026

WATERSHED CONSERVATION AUTHORITY
100 N OLD SAN GABRIEL CANYON ROAD
AZUSA, CA 91702
PHONE: (626) 815-1019

Lynne Dwyer
Landscape Architect
2616 NORTH FIGUEROA, SUITE A
LOS ANGELES, CA 90065
(323) 221-9500

SHEET TITLE
SIGNAGE PLAN

PROJECT TITLE
OAKS STAIRWAY & OVERLOOK
EAST FORK, SAN GABRIEL RIVER

LICENSED LANDSCAPE ARCHITECT
LYNNE DWYER
Signature
5/31/2027
Renewal Date
LICENSE NO. 3407
STATE OF CALIFORNIA

DRAWN BY:	KT
CHECKED BY:	LD
PROJECT NO.	OS2019
DATE:	JUNE 1 2026

L-3.00

FRONT OF KIOSK

BACK OF KIOSK

A KIOSK WITH SIGNAGE

Scale: NTS

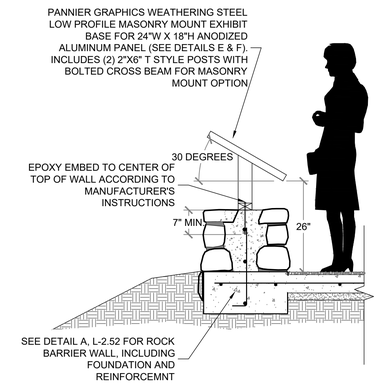

B MASONRY MOUNT EXHIBIT BASE BY PANNIER

Scale: NTS

NOTE:
SIGNAGE GRAPHIC TO BE PROVIDED BY LANDSCAPE ARCHITECT.

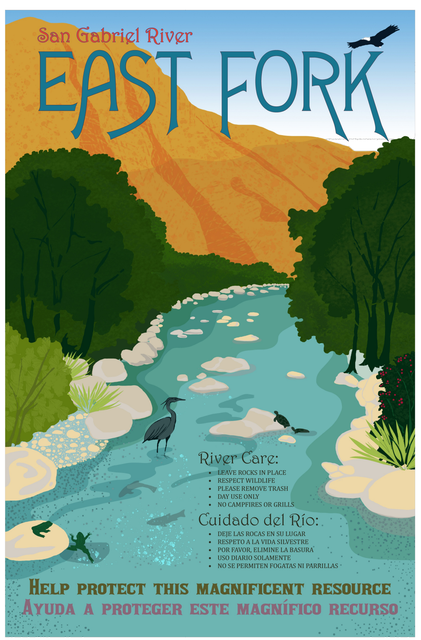

SIGN: "PROTECT THE EAST FORK" (COLOR SIGN)
MATERIAL: DIGITAL FIBERGLASS-EMBEDDED PANEL. SINGLE-FACED. MATTE FINISH. SQUARE CUT. NO HOLES
SIZE: 24X36
COUNT: 1
MANUFACTURER: PANNIER GRAPHICS

C "PROTECT THE EAST FORK"

Scale: NTS

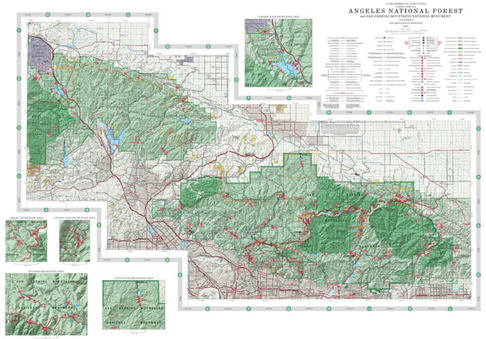

SIGN: ANGELES NATIONAL FOREST MAP (BY ANF)
MATERIAL: DIGITAL FIBERGLASS-EMBEDDED PANEL. SINGLE-FACED. MATTE FINISH. SQUARE CUT. NO HOLES
SIZE: 52"X76"
COUNT: 1
MANUFACTURER: PANNIER GRAPHICS

D "ANGELES NATIONAL FOREST" (BY ANF)

Scale: NTS

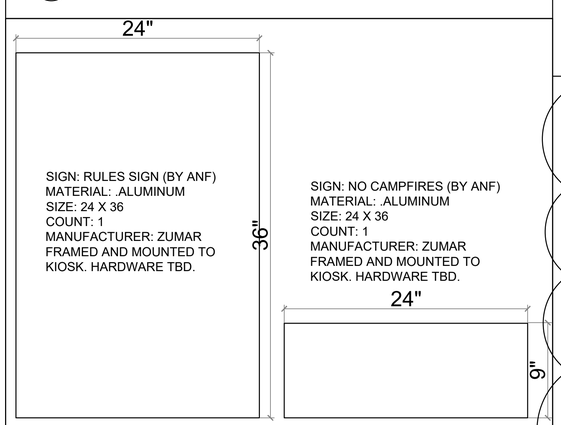

SIGN: RULES SIGN (BY ANF)
MATERIAL: .ALUMINUM
SIZE: 24 X 36
COUNT: 1
MANUFACTURER: ZUMAR FRAMED AND MOUNTED TO KIOSK. HARDWARE TBD.

SIGN: NO CAMPFIRES (BY ANF)
MATERIAL: .ALUMINUM
SIZE: 24 X 36
COUNT: 1
MANUFACTURER: ZUMAR FRAMED AND MOUNTED TO KIOSK. HARDWARE TBD.

G RULES SIGNS

Scale: NTS

NOTE:
SIGNAGE GRAPHIC TO BE PROVIDED BY LANDSCAPE ARCHITECT.

24" × 18"

The Santa Ana Sucker:

The East Fork is its Home/East Fork es su Hogar

One of the last remaining native fishes of southern California, the Santa Ana sucker (*Catostomus santaanae*) is a ray-finned fish, endemic to the Los Angeles, San Gabriel, Santa Ana and Santa Clara watersheds. Its habitat is found in clean, cool, rocky streams that flow year-round. The species is uniquely adapted to survive fast moving water and dynamic flooding conditions such as occur seasonally here on the East Fork of the San Gabriel River. Populations of the Santa Ana sucker have declined significantly in recent decades due to fragmented habitat, hydrological modifications, poor water quality and other factors. Let's share the river with this vulnerable species by keeping the water clean, free of trash and debris, and leaving the stream's rock and gravel undisturbed.

Uno de los últimos peces nativos restantes del sur de California, el Santa Ana sucker (*Catostomus santaanae*) es un pez con aletas radiadas, endémico de las cuencas de Los Angeles, San Gabriel, Santa Ana y Santa Clara. Su hábitat se encuentra en corrientes limpias, frescas y rocosas que fluyen durante todo el año. La especie está adaptada de forma única para sobevivir en aguas rápidas y en condiciones de inundación dinámicas, como las que se producen estacionalmente aquí en el East Fork del río San Gabriel. Las poblaciones del Santa Ana sucker han disminuido significativamente en las últimas décadas debido al hábitat fragmentado, las modificaciones hidrológicas, la mala calidad del agua y otros factores. Compartamos el río con esta especie vulnerable manteniendo el agua limpia, libre de basura y escombros, y dejando la roca y la grava del arroyo intactas.

SIGN: "SANTA ANA SUCKER"
MATERIAL: ANODIZED ALUMINUM .020" WITH METALPHOTO FINISH MATTE
SIZE: 18" X 24"
COUNT: 1
MOUNT: PERMANENT PRESSURE-SENSITIVE ADHESIVE MOUNT TO PANNIER GRAPHICS MASONRY MOUNT EXHIBIT BASE

E "SANTA ANA SUCKER"

Scale: NTS

NOTE:
SIGNAGE GRAPHIC TO BE PROVIDED BY LANDSCAPE ARCHITECT.

24" × 18"

The Moutain Yellow-Legged Frog:

A Fragile Species Threatened by Extinction/Una Especie Frágil Amenazada por la Extinción

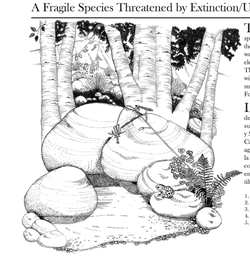

The mountain yellow-legged frog (*Rana muscosa*), is a federally listed endangered species native to California. Its habitat in southern California is currently limited to the San Gabriel, San Bernardino, and San Jacinto Mountains. Historically the species was widespread in southern California's mountains between 1,200 and 7,500 feet elevation, where shaded streams and cool waters originate from springs and snowmelt. Threatened by impacted habitat, predation by nonnative species, fungal pathogens, wildfire, drought, pollution and other factors, the species has been reduced to very small populations in a handful of isolated streams. The wild headwaters of the East Fork are one of the last remaining refuges for this fragile amphibean.

La rana de patas amarillas de montaña (*Rana muscosa*), es una especie en peligro de extinción que figura en la lista federal y es nativa de California. Su hábitat en el sur de California se limita actualmente a las montañas San Gabriel, San Bernardino y San Jacinto. Históricamente, la especie se extendió en las montañas del sur de California, entre 1,200 y 7,500 pies de altitud, donde los arroyos sombreados y las aguas frías se originan en manantiales y deshielo. Amenazada por el hábitat afectado, la depredación por especies no nativas, patógenos fúngicos, incendios, sequías, contaminación y otros factores, la especie se ha reducido a poblaciones muy pequeñas en un puñado de arroyos aislados. Las cabeceras salvajes de East Fork son uno de los últimos refugios restantes para este frágil anfibio.

1. Egg mass
2. Immature tadpole
3. Mature tadpole (up to 2.8 inches)
4. Froglet
5. Adult (body measures 2-3.75 inches)
6. Mass de huevo
7. Renacuajo inmaduro
8. Renacuajo maduro (hasta 2.8 pulgadas)
9. Froglet
10. Adulto (el cuerpo mide 2-3.75 pulgadas)

SIGN: "MOUNTAIN YELLOW-LEGGED FROG"
MATERIAL: ANODIZED ALUMINUM .020" WITH METALPHOTO FINISH MATTE
SIZE: 18" X 24"
COUNT: 1
MOUNT: PERMANENT PRESSURE-SENSITIVE ADHESIVE MOUNT TO PANNIER GRAPHICS MASONRY MOUNT EXHIBIT BASE

F "MOUNTAIN YELLOW-LEGGED FROG"

Scale: NTS

2

INTERPRETIVE ELEMENTS IN PAVING

THE METAL INLAYS ARE TO BE PLACED IN THE PAVEMENT ADJACENT TO THE SIGNAGE REPRESENTING THE SANTA ANA SUCKER AND HER RED LEGGED FROG.

THE METAL ELEMENTS WILL BE PLACED IN CONCRETE PAVING IN THE AREA THAT WILL RECEIVE FOOT TRAFFIC. THE METAL ELEMENTS SHALL NOT CREATE A TRIP HAZARD. THE METAL ELEMENTS SHALL NOT BE RAISED ABOVE THE CONCRETE SURFACE BY MORE THAN $\frac{1}{8}$ INCH (3MM) OR RECEDE BELOW BY MORE THAN $\frac{1}{8}$ INCH. THE PAVED SURFACE INCLUDING ELEMENT SHALL HAVE NO VERTICAL CHANGES & GAPS THAT EXCEED $\frac{1}{4}$ INCH (6MM). ANCHORS WELDED TO THE BACK OF METAL ELEMENTS ARE TO BE $\frac{3}{8}$ INCH THREADED ROD, 3 INCH LONG, WITH BRONZE NUT, USE TWO ANCHORS FOR EACH FISH AND 1 FOR EACH FROG.

THE INLAYS WILL BE EMBEDDED IN THE CONCRETE WALKWAY WITH A SPECIALTY EXPOSED AGGREGATE. TWO AREAS WILL EACH HAVE 12 SQUARE FEET OF SPECIALTY AGGREGATE SURFACE.

FABRICATOR:
JAMES NASH STUDIOS
323 314-3824

METAL INLAY EMBEDDED IN SPECIALTY AGGREGATE

CAST BRONZE ANIMAL INLAYS WITH ANCHORS.

QUANTITY:
6 THREE INCH MOUNTAIN YELLOW-LEGGED FROG

6 SIX INCH SANTA ANA SUCKER FISH

1. SANTA ANA SUCKER: (6) 3" TO 4" METAL CUTOUTS OF THE SANTA ANA SUCKER TO BE LOCATED IN FRONT OF THE SANTA ANA SUCKER INTERPRETIVE DISPLAY

2. MOUNTAIN YELLOW-LEGGED FROG: (6) 3" TO 4" METAL CUTOUTS OF THE MOUNTAIN YELLOW-LEGGED FROG TO BE LOCATED IN FRONT OF THE MOUNTAIN YELLOW-LEGGED FROG INTERPRETIVE DISPLAY

H METAL INLAY EMEDDED IN SPECIALTY AGGREGATE

Scale: NTS

REVISIONS	DATE
1 BID ALTERNATES	05/16/2026
2 PLAN REVISIONS	05/16/2026
3 CXT RESTROOM	05/16/2026

WATERSHED CONSERVATION AUTHORITY
100 N OLD SAN GABRIEL CANYON ROAD
AZUSA, CA 91702
PHONE: (626) 815-1019

Lynne Dwyer Landscape Architect
2616 NORTH FIGUEROA, SUITE A
LOS ANGELES, CA 90065
(323) 221-9500

SHEET TITLE: SIGNAGE DETAILS

PROJECT TITLE: OAKS STAIRWAY & OVERLOOK
EAST FORK, SAN GABRIEL RIVER

LICENSED LANDSCAPE ARCHITECT — LYNNE DWYER — Signature — 5/31/2027 Renewal Date — LICENSE NO. 3457 — STATE OF CALIFORNIA

DRAWN BY:	KT
CHECKED BY:	LD
PROJECT NO.	OS2019
DATE:	JUNE 1 2026

L-3.50

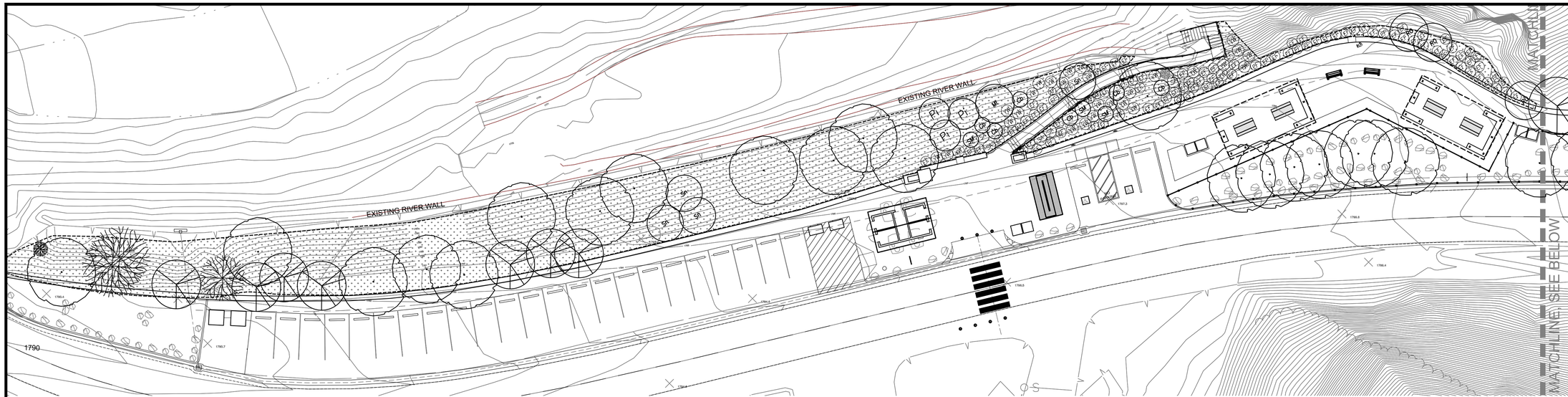

CONTAINER PLANTS, TREES AND SHRUBS

A12

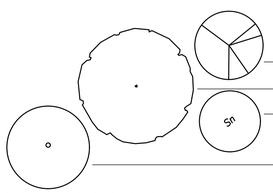

BOTANICAL / COMMON NAME	SIZE	QTY.	REMARKS
TREES			
FRAXINUS VELUTINA / VELVET ASH	5 GAL.	7	NATURAL FORM/LOW BRANCHING
QUERCUS CHRYSOLEPIS / CANYON LIVE OAK	5 GAL.	31	NATURAL FORM/LOW BRANCHING
SAMBUCUS NIGRA SSP CAERULEA / BLUE ELDERBERRY	5 GAL.	4	NATURAL FORM/LOW BRANCHING
PLATANUS RACEMOSA	5 GAL.	3	NATURAL FORM/LOW BRANCHING

FOR UPLAND HYDROSEED MIX THE FOLLOWING SPECIES WILL BE USED:

A14

UPLAND HYDROSEED MIX (TOTAL .32 ACRE)

BOTANICAL / COMMON NAME	QTY
CALIFORNIA BUCKWHEAT (ERIOGONUM FASCICULATUM)	1.0 PLS LBS/ACRE
BIRCH LEAF MOUNTAIN MAHOGANY (CERCOCARPUS BETULOIDES)	2.0 PLS LBS/ACRE
LAUREL SUMAC (MALOSMA LAURINA)	4.0 PLS LBS/ACRE
CHAMISE (ADENOSTOMA FASCICULATUM)	0.5 PLS LBS/ACRE
BLACK SAGE (SALVIA MELLIFERA)	0.5 PLS LBS/ACRE
YUCCA (HESPEROYUCCA WHIPPLEI)	3.0 PLS LBS/ACRE
BLUE ELDERBERRY (SAMBUCUS NIGRA SSP CAERULEA)	2.0 PLS LBS/ACRE
CHAPARRAL NEEDLEGRASS (ACNATHERUM CORONATUM)	1.0 PLS LBS/ACRE
WHITE SAGE (SALVIA APIANA)	1.0 PLS LBS/ACRE
MIMULUS AURANTIACUS (STICKY MONKEYFLOWER)	0.1 PLS LBS/ACRE
ARTEMISIA DOUGLASIANA (CALIFORNIA MUGWORT)	0.1 PLS LBS/ACRE

SCALE: 1" = 20'

0 10 20 40

SHRUBS

A13

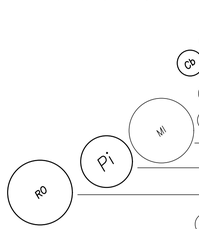

ADENOSTOMA FASCICULATUM / CHAMISE	1 GAL.	6
CERCOCARPUS BETULOIDES / BIRCH LEAF MOUNTAIN MAHOGANY	5 GAL.	6
ERIOGONUM FASCICULATUM / CALIFORNIA BUCKWHEAT	1 GAL.	126
HESPEROYUCCA WHIPPLEI / YUCCA	1 GAL.	30
MALOSMA LAURINA / LAUREL SUMAC	1 GAL.	1
PRUNUS ILICIFOLIA / HOLLYLEAF CHERRY	1 GAL.	3
RHUS OVATA / SUGARBUSH	1 GAL.	3
SALVIA APIANA / WHITE SAGE	1 GAL.	5
SALVIA MELLIFERA / BLACK SAGE	1 GAL.	3

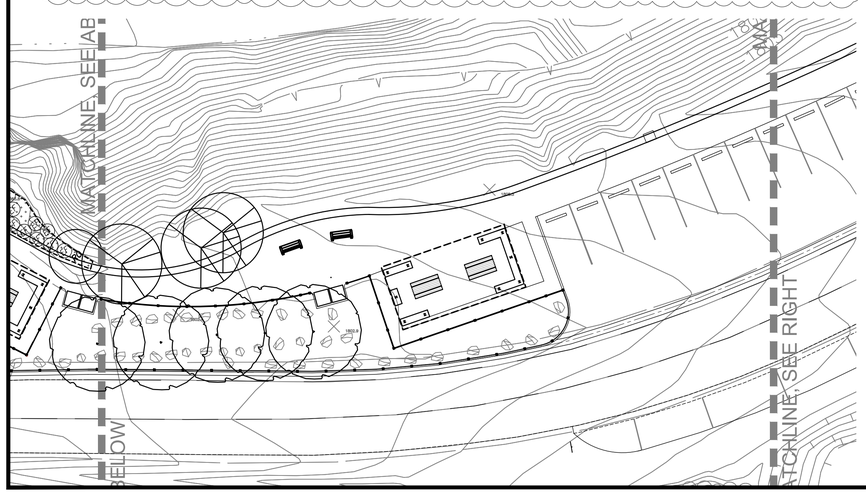

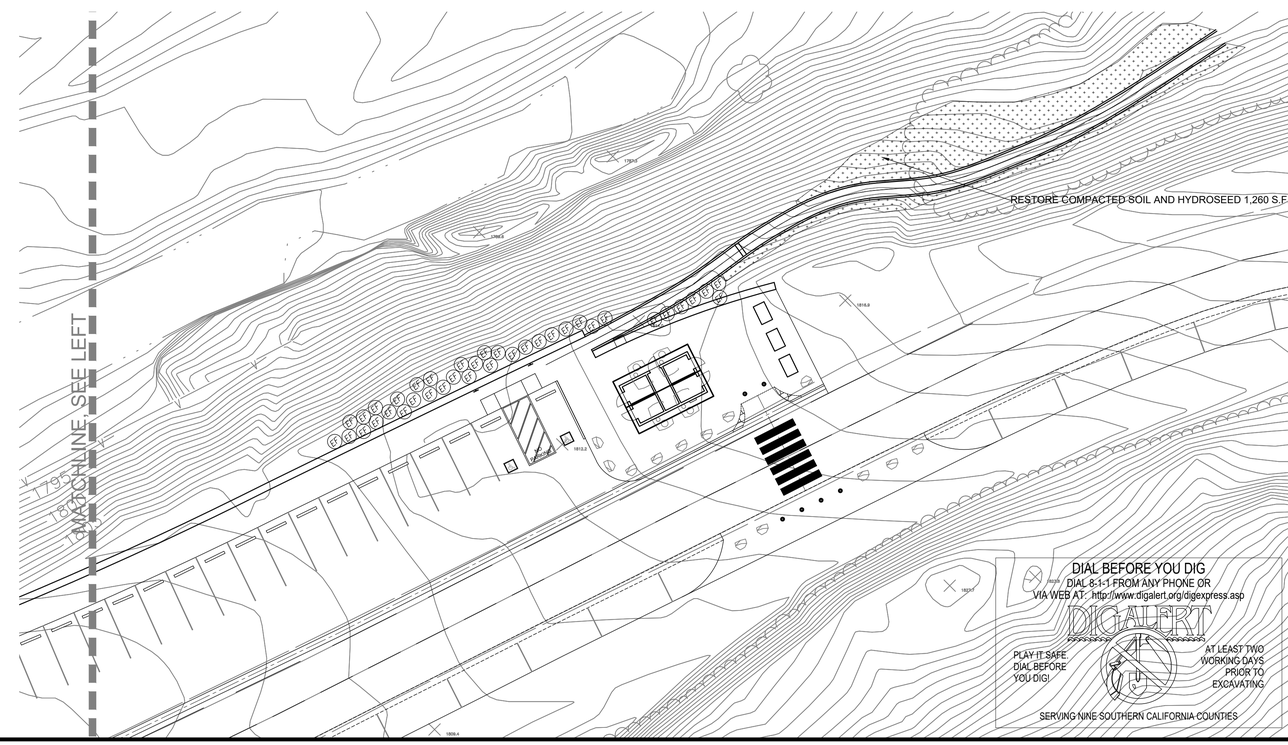

DIAL BEFORE YOU DIG
DIAL 8-1-1 FROM ANY PHONE OR
VIA WEB AT: http://www.digalert.org/digexpress.asp
DIGALERT
PLAY IT SAFE. DIAL BEFORE YOU DIG!
AT LEAST TWO WORKING DAYS PRIOR TO EXCAVATING
SERVING NINE SOUTHERN CALIFORNIA COUNTIES

REVISIONS	DATE
1 BID ALTERNATES	05/16/2026
2 PLAN REVISIONS	05/16/2026
3 CXT RESTROOM	05/16/2026

WATERSHED CONSERVATION AUTHORITY
100 N OLD SAN GABRIEL CANYON ROAD
AZUSA, CA 91702
PHONE: (626) 815-1019

Lynne Dwyer
Landscape Architect
2616 NORTH FIGUEROA, SUITE A
LOS ANGELES, CA 90065
(323) 221-9300

SHEET TITLE

PLANTING PLAN

PROJECT TITLE

OAKS STAIRWAY & OVERLOOK
EAST FORK, SAN GABRIEL RIVER

LICENSED LANDSCAPE ARCHITECT
LYNNE DWYER
5/31/2027
Renewal Date
Date
LICENSE NO. 3607
STATE OF CALIFORNIA

DRAWN BY:	SH
CHECKED BY:	LD
PROJECT NO.	OS2019
DATE:	JUNE 1 2026

L-4.00

PLANTING & RESTORATION NOTES

THE PLAN(S) ARE DIAGRAMMATIC. THE CONTRACTOR SHALL VERIFY EXISTING CONDITIONS AND NOTIFY THE PROJECT MANAGER/LANDSCAPE ARCHITECT OF ANY DISCREPANCIES PRIOR TO THE START OF WORK.

FILL MATERIAL
ALL FILL MATERIAL (SOIL, SAND, GRAVEL, ROCK) USED FOR RESTORATION ACTIVITIES MUST BE FROM AN ANF APPROVED MATERIAL SITE. MATERIAL REMOVED FROM ANOTHER LOCATION IN THE PROJECT AREA CAN BE USED AS FILL AT OTHER SITES ONLY IF IT IS FREE OF TARGET INVASIVE SPECIES. IF SOIL AND DEBRIS COLLECTED FROM A LOCATION CONTAINING TARGET INVASIVE SPECIES IS MOVED AND DEPOSITED FOR STORAGE IT MUST BE AT A USFS DESIGNATED LOCATION. COMMON WIDE SPREAD NON-NATIVE SPECIES WILL NOT BE CONSIDERED AS TARGET INVASIVE SPECIES.

EROSION CONTROL
ALL PLANT MATERIAL (E.G., STRAW, MULCH, SEEDS, ETC) USED FOR EROSION CONTROL AND/OR ROAD MAINTENANCE MUST BE CERTIFI ED WEED-FREE. ONLY WEED-FREE RICE STRAW OR RICE MULCH SHALL BE ALLOWED. ALL EROSION CONTROL MATERIAL MUST BE BIODEGRADABLE. WATTLES WRAPPED IN PHOTODEGRADABLE PLASTIC ARE NOT ACCEPTABLE.

CLOSURE AND RESTORATION OF INFORMAL TRAILS
AREAS WHERE USER CREATED TRAILS ARE CLOSED AND PLANTED, YUCCA WILL BE HEAVILY PLANTED TO DETER UNWANTED FOOT TRAFFI C. ADDITIONALLY, VEGETATION CUT FROM ANOTHER AREA OF THE PROJECT AREA (IE, TRAIL CREATION) WILL BE USED TO AID RESTORATION AND DETER UNWANTED FOOT TRAFFIC.

ENHANCEMENT OF RIPARIAN HABITAT (E.G., NONNATIVE PLANT REMOVAL AND/OR REVEGETATION)
NONNATIVE PLANT REMOVAL CONDUCTED WITHIN THE PROJECT AREA IS TO BE IMPLEMENTED IN ACCORDANCE WITH THE SAN GABRIEL RIVER INVASIVE PLANT TREATMENT PROJECT LETTER (USFWS 2013). FOR RIPARIAN PLANTING THE FOLLOWING SPECIES WILL BE USED: WILLOW (SALIVA LASIANDRA, S. EXIGUA AND S.LASIOLEPIS) AND MULEFAT (BACCHARIS SALICIFOLIA). TREE SPECIES WILL BE AS FOLLOWS: WHITE ALDER (ALNUS RHOMBIFOLIUS), CALIFORNIA SYCAMORE (PLATANUS RACEMOSA) AND COAST LIVE OAK (QUERCUS AGRIFOLIA).

ENHANCEMENT OF UPLAND HABITAT (E.G., NONNATIVE PLANT REMOVAL AND/OR REVEGETATION)
NONNATIVE PLANT REMOVAL CONDUCTED WITHIN THE PROJECT AREA IS TO BE IMPLEMENTED IN ACCORDANCE WITH THE SAN GABRIEL RIVER INVASIVE PLANT TREATMENT PROJECT LETTER (USFWS 2013). FOR UPLAND PLANTING THE FOLLOWING SPECIES WILL BE USED: YUCCA (HESPEROYUCCA WHIPPLEI), CALIFORNIA BUCKWHEAT (ERIOGONUM FASCICULATUM), BIRCH LEAF MOUNTAIN MAHOGANY (CERCOCARPUS BETULOIDES), BLUE ELDERBERRY (SAMBUCUS NIGRA SSP CAERULEA), CHAMISE (ADENOSTOMA FASCICULATUM), CHAPARRAL NEEDLEGRASS (ACNATHERUM CORONATUM), LAUREL SUMAC (MALOSMA LAURINA), WHITE SAGE (SALVIA APIANA) AND BLACK SAGE (SALVIA MELLIFERA). TREE SPECIES ARE AS FOLLOWS: INTERIOR LIVE OAK (QUERCUS WISLIZENII).

DISPOSAL OF INVASIVE PLANTS
IF REMOVAL OF INVASIVE PLANTS IS REQUIRED, THE USFS BOTANIST WILL DETERMINE THE APPROPRIATE DISPOSAL METHOD. THIS MAY INCLUDE PLACEMENT OF PLANTS IN 3MM GARBAGE BAGS AND DISPOSAL OFF FOREST AT A SITE APPROVED TO ACCEPT SUCH MATERIAL.

NURSERY STOCK AND SEED AND CUTTING COLLECTION
IF CONTAINER PLANTS ARE USED AS PART OF THE RESTORATION PROJECT, ALL NURSERIES THAT GROW OUT PLANTS MUST USE BMPS DEVELOPED AND APPROVED BY THE PHYTOPHTHORAS IN NATIVE HABITATS WORKING GROUP. A RANDOM SAMPLING OF THE CONTAINER PLANTS MUST BE TESTED FOR DISEASES INCLUDING PHYTOPHTHORAS. SEED AND CUTTING COLLECTION MUST FOLLOW SEED COLLECTING GUIDELINES FOR THE CATTLE CANYON PROJECT.

PLANTING SCHEDULE
PLANTING AND SEEDING WILL BE COMPLETED BETWEEN SEPTEMBER AND JANUARY TO BENEFIT FROM WINTER RAINS AND BE MATURE ENOUGH TO WITHSTAND SUMMER HEAT.

PLANTINGS IN PARKING AND DEVELOPED AREAS
PLANTINGS IN PARKING AND DEVELOPED AREAS ARE TO FOLLOW THE SAME GUIDELINES AS THOSE GIVEN FOR RIPARIAN AND UPLAND HABITAT. DUE TO LACK OF WATER INFRASTRUCTURE, IT IS IMPORTANT THAT ANY PLANTING DESIGN THAT OCCURS IN PARKING AND DEVELOPED AREAS BE ORGANIZED SUCH THAT, SHOULD THEY NOT SUCCEED, THEY WILL INTEGRATE INTO THE RUGGED, NATURAL AREAS OF THE SURROUNDING LANDSCAPE RATHER THAN APPEAR TO BE FAILED LANDSCAPE PLANTINGS. PLANTERS WITH FORMALLY DESIGNATED HARDSCAPE WALLS, FOR INSTANCE, ARE DISCOURAGED. ONLY THE HARDIEST OF NATIVE PLANTS AND TREES WITH THE BEST CHANCES OF SUCCESS ARE TO BE SELECTED FOR THESE AREAS.

NATIVE TREE ESTABLISHMENT IN AREAS DISTURBED BY RECREATIONAL DEVELOPMENT IS A PRIORITY. TREES ARE TO BE LOCATED IN AREAS PROTECTED FROM VEHICLES AND FOOT TRAFFIC, AND ORGANIZED TO BEST FACILITATE INITIAL WATERING BY TRUCK UNTIL THEY CAN SUCCEED WITHOUT SUPPLEMENTAL WATER.

HYDROSEED NOTES

1. HYDROSEEDING TO TAKE PLACE AFTER CONTAINER PLANTS ARE INSTALLED.
2. HYDROSEED MIX TO CONTAIN:
   SEED MIX PER PLANTING PLAN
   MYCORRHIZAL INOCULUM - 3,600,000 LIVE PROPAGULES PER ACRE
   WOOD FIBER MULCH - 2,200 POUNDS PER ACRE
   WATER - AS NEEDED FOR APPLICATION
3. MIX SLURRY ACCORDING TO MANUFACTURERS INSTRUCTIONS. SLURRY IS NOT TO REMAIN IN TANK MORE THAN ONE HOUR BEFORE APPLICATION.
4. SPRAY DESIGNATED SOIL IN MULTIPLE, UNIFORM LAYERS FOR EVEN COVERAGE.
5. WOOD FIBER MULCH IS TO BE GREEN-DYED VIRGIN WOOD CELLULOSE FIBER CONTAINING NO GERMINATION OR GROWTH INHIBITION FACTORS.

IRRIGATION NOTES

1 A9

THE PLAN(S) ARE DIAGRAMMATIC. THE CONTRACTOR SHALL VERIFY EXISTING CONDITIONS AND NOTIFY THE PROJECT ENGINEER/LANDSCAPE ARCHITECT OF ANY DISCREPANCIES PRIOR TO THE START OF WORK.

IRRIGATION METHOD
IRRIGATION WILL BE PROVIDED USING A WATER TRUCK.

BASED ON HISTORICAL WEATHER DATA AND THE WATER NEEDS OF UPLAND CALIFORNIA NATIVE PLANTS AND EVAPOTRANSPIRATION DATA FROM CIMIS, THE FOLLOWING SAMPLE WATERING SCHEDULE CAN BE ASSUMED.

SAMPLE IRRIGATION SCHEDULE FOR OAKS ACCESS BY MONTH FOR FIRST YEAR (NUMBER OF IRRIGATION EVENTS PER MONTH. FIVE GALLONS OF WATER WILL BE SUPPLIED PER PLANT, PER IRRIGATION EVENT.)

JAN	FEB	MAR	APR	MAY	JUNE	JULY	AUG	SEP	OCT
4	4	2	2	3	4	4	4	3	2

ACCORDING TO THIS SAMPLE SCHEDULE, THE RESTORED SLOPE INSIDE THE OAKS PROJECT AREA WILL REQUIRE THE FOLLOWING AMOUNTS OF WATER:

JAN - 5,320 GAL
FEB - 5,320 GAL
MARCH - 2,660 GAL
APRIL - 2,660 GAL
MAY - 3,990 GAL
JUNE - 5,320 GAL
JULY - 5,320 GAL
AUGUST - 5,320 GAL
SEPTEMBER - 3,990 GAL
OCTOBER - 2,660 GAL

CONTAINER PLANTS
ALL CONTAINER PLANTS ARE TO BE HAND WATERED FOR TWO YEARS. IT IS EXPECTED THAT WATER APPLICATION WILL BE HIGHEST IN THE FIRST YEAR, AND APPLICATION RATES CAN BE REDUCED IN THE SECOND YEAR IN ORDER TO WEAN THE PLANTS FROM IRRIGATION. IRRIGATION WILL NORMALLY BEGIN IN MARCH AND CONTINUE THROUGH OCTOBER, DEPENDING ON WEATHER CONDITIONS, WITH MAY THROUGH SEPTEMBER BEING THE MONTHS WHEN THE MOST WATER IS SUPPLIED. HOWEVER, IF SUFFICIENT RAIN DOES NOT OCCUR AT REGUALR INTERVALS DURING THE FIRST TWO MONTHS AFTER CONTAINER PLANTS ARE INSTALLED (WHEN PLANT ROOTS ARE MOST VULNERABLE TO DRYING OUT) THEN IRRIGATION MUST BE PROVIDED. MAINTAIN A HAND DUG DEPRESSION TO KEEP IRRIGATION WATER AT THE ROOT ZONE AND PROVIDE A MORE PROTECTIVE MICROCLIMATE FOR THE PLANTS. BASINS MUST BE MAINTAINED PRIOR TO WATERING.

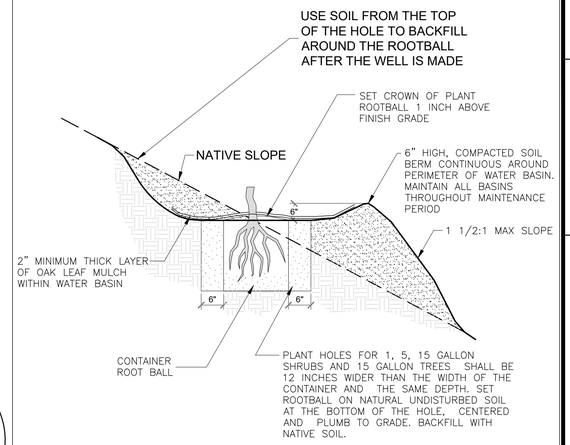

A SHRUB AND TREE SLOPE PLANTING
Scale: NTS

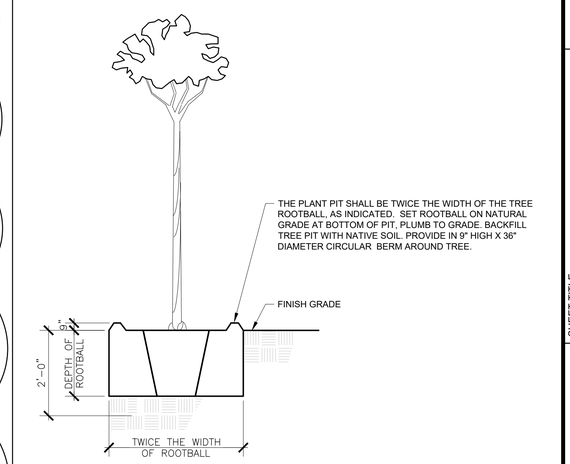

B TREE PLANTING
Scale: NTS

DIAL BEFORE YOU DIG
DIAL 8-1-1 FROM ANY PHONE OR
VIA WEB AT: http://www.digalert.org/digexpress.asp
DIGALERT
PLAY IT SAFE. DIAL BEFORE YOU DIG!
AT LEAST TWO WORKING DAYS PRIOR TO EXCAVATING
SERVING NINE SOUTHERN CALIFORNIA COUNTIES

REVISIONS	DATE
1 BID ALTERNATES	05/16/2026
2 PLAN REVISIONS	05/16/2026
3 CXT RESTROOM	05/16/2026

WATERSHED CONSERVATION AUTHORITY
100 N OLD SAN GABRIEL CANYON ROAD
AZUSA, CA 91702
PHONE: (626) 815-1019

Lynne Dwyer
Landscape Architect
2616 NORTH FIGUEROA, SUITE A
LOS ANGELES, CA 90065
(323) 221-9500

SHEET TITLE
PLANTING & IRRIGATION NOTES

PROJECT TITLE
OAKS STAIRWAY & OVERLOOK
EAST FORK, SAN GABRIEL RIVER

LICENSED LANDSCAPE ARCHITECT
LYNNE DWYER
5/31/2027
Renewal Date
Date
LICENSE NO. 3807
STATE OF CALIFORNIA

DRAWN BY:	SH
CHECKED BY:	LD
PROJECT NO.	OS2019
DATE:	JUNE 1 2026

L-4.50

PROJECT DESIGN MEASURES FOR ENVIRONMENTAL PROTECTION

GUIDELINES TO MINIMIZE PHYTOPHTHORA CONTAMINATION IN RESTORATION PROJECTS
WORKING GROUP FOR PHYTOPHTHORAS IN NATIVE HABITATS OCTOBER 2016

THESE GUIDELINES AIM TO AVOID CONTAMINATION OF RESTORATION SITES WITH EXOTIC PATHOGENIC PHYTOPHTHORA SPECIES OR OTHER PLANT PATHOGENS DURING PLANTING AND RELATED ACTIVITIES.

DEFINITIONS:

HOLDING FACILITY OR NURSERY: A FACILITY WHERE NURSERY STOCK IS MAINTAINED FOR A SHORT TO EXTENDED PERIOD OF TIME PRIOR TO PLANTING. PLANT MAINTENANCE ACTIVITIES MAY INCLUDE IRRIGATION, FERTILIZATION OR LIGHT PRUNING, AS NECESSARY. NURSERIES INVOLVED IN MOST OTHER ACTIVITIES, INCLUDING PROPAGATION OR REPOTTING ARE CONSIDERED PRODUCTION NURSERIES.

JOB SITE: THE JOB SITE INCLUDES AREAS FOR PLANTING, SOIL STOCKPILING, PARKING, AND ACCESS ROADS WITHIN AND LEADING TO THE SITE.

NURSERY STOCK: ALL TYPES OF NURSERY GROWN PLANTS.

PLANTING AREA: AREA BEING PLANTED FOR HABITAT RESTORATION, EROSION CONTROL, OR OTHER PURPOSES.

PLANTING SITE: AN INDIVIDUAL PLANTING BASIN OR OTHER SPOT, TYPICALLY NO LARGER THAN ONE SQUARE YARD, WHERE AN INDIVIDUAL PLANT OR SEVERAL GROUPED PLANTS WILL BE INSTALLED.

SANITIZE: CLEAN AND TREAT WITH A SANITIZING AGENT OR VIA A LETHAL HEAT EXPOSURE TO KILL PLANT PATHOGENS PRESENT AS EXTERNAL CONTAMINATION.

SANITIZING AGENT: MATERIALS SUCH AS BLEACH (SODIUM HYPOCHLORITE SOLUTIONS), ALCOHOL, QUATERNARY AMMONIUM COMPOUNDS, AND PEROXIDES THAT CAN DIRECTLY KILL EXPOSED PROPAGULES OF PHYTOPHTHORA OR OTHER PLANT PATHOGENS WHEN USED PROPERLY. MOST SANITIZING AGENTS CAN ALSO KILL A WIDE VARIETY OF BACTERIA AND DEACTIVATE MANY VIRUSES. NOTE THAT MOST MATERIALS REFERRED TO AS FUNGICIDES ARE APPLIED TO PLANTS TO SUPPRESS DISEASE BUT MAY NOT KILL THE PATHOGENS AND ARE NOT SANITIZING AGENTS.

CONSTRUCTION PROJECTS

IN AN EFFORT TO MINIMIZE THE SPREAD OF PLANT PATHOGENS THE EXTERIOR AND INTERIOR OF ALL EQUIPMENT AND TOOLS MUST BE CLEAN AND FREE OF DEBRIS, SOIL AND MUD (INCLUDING TIRES, TREADS, WHEEL WELLS AND UNDERCARRIAGE) PRIOR TO ARRIVAL AT A NEW JOB SITE.

GENERAL GUIDANCE – SUGGESTED STANDARD OPERATING PROCEDURES:

A. VEHICLES NEED TO STAY ON ESTABLISHED ROADS UNLESS INFEASIBLE.
B. IN GENERAL, VEHICLES AND EQUIPMENT NEED TO BE MAINTAINED CLEAN – INTERIOR AND EXTERIOR FREE OF MUD, DEBRIS AND SOIL ESPECIALLY DURING THE WET SEASON.
C. IN GENERAL, WORK SHOES NEED TO BE KEPT CLEAN– INSPECT SHOE SOLES AND KNOCK MUD, DEBRIS AND SOIL OFF TREADS BEFORE MOVING TO A NEW JOB SITE.
D. TO MINIMIZE THE POTENTIAL FOR SPREADING POTENTIALLY CONTAMINATED SOIL AND TIME REQUIRED FOR DECONTAMINATION, IF POSSIBLE, AVOID VEHICLE TRAFFIC AND FIELD WORK WHEN SOILS ARE WET ENOUGH TO STICK READILY TO SHOES, TOOLS, EQUIPMENT AND TIRES.

PLANTING AT FIELD SITES

OVERVIEW: THREE GENERAL ROUTES FOR THE SPREAD OF PHYTOPHTHORA AND OTHER SOILBORNE PLANT PATHOGENS ARE ADDRESSED IN THESE GUIDELINES. THESE ROUTES ARE (1) CONTAMINATION OF PLANTING MATERIAL, INCLUDING CLEAN NURSERY STOCK, AND OTHER MATERIALS INSTALLED AT THE SITE, (2) INADVERTENT INTRODUCTION OF PATHOGENS TO A JOB SITE FROM OTHER OUTSIDE SOURCES (E.G., VIA CONTAMINATED EQUIPMENT), AND (3) POTENTIAL MOVEMENT OF UNDETECTED CONTAMINATION WITHIN THE PLANTING AREA.

THESE GUIDELINES ASSUME THAT ALL NURSERY STOCK WAS ORIGINALLY GROWN UNDER PHYTOSANITARY CONDITIONS AND TESTED AS REMAINING FREE FROM DISEASE IN THE NURSERY (REFER TO NURSERY GUIDELINES). THESE GUIDELINES ADDRESS HOW TO PROTECT THE PLANTING AREA FROM SUBSEQUENT CONTAMINATION DURING THE DELIVERY, STORAGE ONSITE, AND INSTALLATION OF PLANTING STOCK AND MATERIALS.

1. PREVENT CONTAMINATION OF CLEAN NURSERY STOCK OR OTHER CLEAN PLANT MATERIALS
PLANTING STOCK SHALL BE PROTECTED FROM POTENTIAL CONTAMINATION FROM THE POINT THAT IT LEAVES THE PRODUCTION NURSERY OR COLLECTION SITE UNTIL PLANTING. NOTE THAT NURSERY STOCK HAS A HIGH RISK OF INFECTION BY PHYTOPHTHORA SPECIES IF EXPOSED TO THESE PATHOGENS. EXCLUDING THESE PATHOGENS PROVIDES THE ONLY VIABLE OPTION FOR MAINTAINING OUTPLANTED NURSERY STOCK FREE OF PHYTOPHTHORA.

1.1. MAINTAINING NURSERY STOCK IN A HOLDING FACILITY
WHEN HOLDING STOCK FOR AN EXTENDED PERIOD (AFTER DELIVERY FROM PRODUCTION NURSERY AND BEFORE PLANTING), THE FOLLOWING PRACTICES NEED TO BE FOLLOWED TO PREVENT CONTAMINATION OF THE NURSERY STOCK WITH PHYTOPHTHORA.

1.1.1. DELIVERED NURSERY PLANTS THAT WILL BE HELD BEFORE PLANTING SHALL BE TRANSFERRED TO CLEANED AND SANITIZED RAISED BENCHES AND MAINTAINED AS DESCRIBED IN "GUIDELINES TO MINIMIZE PHYTOPHTHORA PATHOGENS FOR HOLDING (NON–PRODUCTION) NURSERIES AT RESTORATION SITES, SECTION 3."

1.2. HANDLING AND TRANSPORTING NURSERY PLANTS AT THE JOB SITE
1.2.1. NURSERY PLANTS SHALL BE TRANSPORTED ON OR IN VEHICLES OR EQUIPMENT THAT HAVE BEEN CLEANED BEFORE LOADING THE STOCK. TRUCK BEDS, RACKS, OR OTHER SURFACES NEED TO BE SWEPT, BLOWN WITH COMPRESSED AIR AND/OR POWER WASHED AS NEEDED SO THEY ARE VISIBLY FREE OF SOIL AND PLANT DETRITUS. MORE INFORMATION ON SANITIZING SURFACES ARE DESCRIBED IN THE APPENDIX.

1.2.2. KEEP PLANTS IN SANITIZED VEHICLES OR ON SANITIZED CARTS, TRAILERS, ETC. UNTIL DELIVERED TO THEIR PLANTING SITES. (MORE INFORMATION MAY BE FOUND IN SECTIONS 1.3.3. AND 1.3.4.)

1.2.3 AT THE JOB SITE, PLANTS SHALL BE HANDLED TO PREVENT CONTAMINATION UNTIL DELIVERED TO EACH PLANTING SITE. NURSERY STOCK SHALL NOT BE PLACED ON THE SOIL OR OTHER POTENTIALLY CONTAMINATED SURFACES UNTIL THEY ARE PLACED AT THEIR SPECIFIC PLANTING SITES.

1.2.4 IF IT IS NECESSARY TO OFFLOAD PLANTS AT THE JOB SITE, PLANTS MAY BE PLACED ON CLEAN WATERPROOF PLASTIC TARPS OR OTHER CLEAN, SANITIZED SURFACES. IF TARPS ARE USED FOR HOLDING PLANTS, ONE SURFACE NEEDS TO BE DEDICATED FOR CONTACT WITH NURSERY STOCK AND WILL BE CLEANED AND SANITIZED TO MAINTAIN PHYTOSANITARY CONDITIONS.

1.3. OTHER PLANTING SITE INPUTS
1.3.1 WASHING, SOAKING, OR IRRIGATION OF PLANT MATERIAL SHALL BE CONDUCTED USING CLEAN WATER SOURCES AS SPECIFIED IN THE APPENDIX BELOW. UNTREATED SURFACE WATERS SHOULD NOT BE USED FOR THESE PURPOSES.

1.3.2. ON–SITE OR OFF–SITE COLLECTION OF PLANT MATERIALS, INCLUDING SEED AND CUTTINGS FOR DIRECT PLANTING, SHALL BE CONDUCTED IN A PHYTOSANITARY MANNER (SEE GUIDELINES FOR COLLECTION PRACTICES AT WWW.CALPHYTOS.ORG).

1.3.3. PRIOR TO DELIVERY TO THE PLANTING AREAS, MULCH, COMPOST, SOIL AMENDMENTS, INOCULANTS, AND OTHER ORGANIC PRODUCTS NEED TO BE EXAMINED AND DETERMINED TO BE LOW–RISK FOR PATHOGEN INTRODUCTION. ACCEPTABLE MATERIALS ARE THOSE THAT ARE FREE OF CONTAMINATION BY PLANT PATHOGENS BASED ON THEIR COMPOSITION OR MANUFACTURING CONDITIONS, OR THAT HAVE BEEN EXPOSED TO AN EFFECTIVE HEAT TREATMENT TO ELIMINATE PATHOGENS. SUCH MATERIALS MUST BE HANDLED AND STORED IN A MANNER THAT PREVENTS CONTAMINATION. AT THE JOB SITE, DELIVERED MATERIALS SHALL BE HANDLED TO PREVENT CONTAMINATION UNTIL DELIVERED TO EACH PLANTING SITE IN THE SAME MANNER SPECIFIED FOR NURSERY STOCK IN SECTION 1.2 ABOVE.

1.3.4. ALL OTHER MATERIALS TO BE INSTALLED AT THE SITE SHALL BE OF NEW OR SANITIZED MATERIAL THAT HAS NOT BEEN STORED IN CONTACT WITH SOIL, UNTREATED SURFACE WATERS, OR OTHER POTENTIALLY CONTAMINATED MATERIALS. THIS INCLUDES IRRIGATION SUPPLIES (SUCH AS PIPE, FITTINGS, VALVES, DRIP LINE, EMITTERS, ETC.), EROSION CONTROL FABRICS, FENCING, STAKES, POSTS, AND OTHER PLANTING SITE INPUTS.

2. CLEANING AND SANITATION REQUIRED BEFORE ENTERING PLANTING AREA TO PREVENT INTRODUCING CONTAMINATION FROM OTHER LOCATIONS
PHYTOPHTHORA CONTAMINATION CAN BE PRESENT IN AGRICULTURAL AND LANDSCAPED AREAS, IN COMMERCIAL NURSERY STOCK, AND IN SOME INFESTED NATIVE OR RESTORED HABITAT AREAS. CONTAMINATION CAN BE SPREAD VIA SOIL, PLANT MATERIAL AND DEBRIS, AND WATER FROM INFESTED AREAS. ARRIVING AT THE SITE WITH CLEAN VEHICLES, EQUIPMENT, TOOLS, FOOTWEAR, AND CLOTHING HELPS PREVENT UNINTENTIONAL CONTAMINATION OF THE PLANTING SITE FROM OUTSIDE SOURCES.

2.1. VEHICLES, EQUIPMENT, AND TOOLS
2.1.1. EQUIPMENT, VEHICLES AND LARGE TOOLS MUST BE FREE OF SOIL AND DEBRIS ON TIRES, WHEEL WELLS, VEHICLE UNDERCARRIAGES, AND OTHER SURFACES BEFORE ARRIVING AT THE PLANTING AREA. A HIGH PRESSURE WASHER AND/OR COMPRESSED AIR MAY BE USED TO ENSURE THAT SOIL AND DEBRIS ARE COMPLETELY REMOVED. VEHICLES THAT ONLY TRAVEL AND PARK ON PAVED ROADS DO NOT REQUIRE EXTERNAL CLEANING.

2.1.2. THE INTERIOR OF EQUIPMENT (CABS, ETC.) SHOULD BE FREE OF MUD, SOIL, GRAVEL AND OTHER POTENTIALLY CONTAMINATED MATERIAL. INTERIORS SHOULD BE VACUUMED, WASHED, AND/OR TREATED WITH SANITIZING AGENTS AS NEEDED TO ELIMINATE PATHOGEN PROPAGULES THAT COULD BE TRANSFERRED TO THE PLANTING AREA.

2.1.3. SMALL TOOLS AND OTHER SMALL EQUIPMENT (INCLUDING HOSES, QUICK COUPLERS, HOSE NOZZLES, AND IRRIGATION WANDS) NEED TO BE WASHED TO BE FREE OF SOIL OR OTHER CONTAMINATION AND SANITIZED (SEE APPENDIX).

2.1.4. HOSES SHALL BE NEW OR PREVIOUSLY USED ONLY FOR CLEAN WATER SOURCES (SEE APPENDIX).

2.2. FOOTWEAR AND CLOTHING
2.2.1. SOLES AND UPPERS OF FOOTWEAR NEED TO BE VISIBLY FREE OF DEBRIS AND SOIL BEFORE ARRIVING AT THE PLANTING AREA. (SEE THE APPENDIX FOR MORE DETAILS.)

2.2.2. AT THE START OF WORK AT EACH NEW JOB SITE, WORKER CLOTHING SHALL BE FREE OF ALL MUD, SOIL OR DETRITUS. IF CLOTHING IS NOT FRESHLY LAUNDERED, ALL DEBRIS AND ADHERED SOIL SHOULD BE REMOVED BY BRUSHING WITH A STIFF BRUSH.

2.2.3. GLOVES AND NON–POROUS KNEE PADS MUST BE NEW (IF DISPOSABLE) OR LAUNDERED/SANITIZED AT THE START OF EACH WORK DAY, AND/OR CLEAN COVERALLS MUST BE WORN. NON–DISPOSABLE GLOVES SHOULD BE MADE OF OR COATED WITH MATERIAL, SUCH AS NITRILE, THAT CAN BE SANITIZED.

3. PREVENT POTENTIAL SPREAD OF CONTAMINATION WITHIN PLANTING AREAS
PHYTOPHTHORA CAN ALSO BE SPREAD WITHIN PLANTINGS AREAS IF SOME PORTIONS OF THE SITE ARE CONTAMINATED. HOWEVER, IT IS NOT POSSIBLE TO IDENTIFY EVERY PORTION OF A PLANTING AREA THAT MAY CONTAIN PHYTOPHTHORA. BECAUSE PHYTOPHTHORA CONTAMINATION IS NOT VISIBLE, WORKING PRACTICES SHOULD MINIMIZE THE MOVEMENT OF SOIL WITHIN THE PLANTING AREA TO REDUCE THE LIKELIHOOD OF PATHOGEN SPREAD.

NOTE THAT AREAS WITH HIGHER RISK OF PHYTOPHTHORA INFESTATION INCLUDE AREAS ADJACENT TO PLANTED LANDSCAPING, AREAS PREVIOUSLY PLANTED WITH PHYTOPHTHORA–INFECTED STOCK, AREAS WITH EXISTING OR RECENTLY REMOVED WOODY VEGETATION, DISTURBED WETLANDS, AND AREAS DIRECTLY ALONG WATERCOURSES. AREAS WITH LOW RISK OF CONTAMINATION TYPICALLY INCLUDE UPLAND SITES WITH ONLY GRASSY VEGETATION OR SITES WHERE SURFACE SOILS HAVE BEEN REMOVED.

3.1. WORKER TRAINING AND SITE ACCESS
3.1.1. BEFORE ENTERING THE JOB SITE, FIELD WORKERS NEED TO RECEIVE TRAINING THAT INCLUDES INFORMATION ON PHYTOPHTHORA PATHOGENS AND HOW TO PREVENT THE SPREAD OF THESE AND OTHER SOILBORNE ORGANISMS BY FOLLOWING APPROVED PHYTOSANITARY PROCEDURES. WORKERS SHOULD ALSO BE INFORMED ABOUT ANY SITE–SPECIFIC PHYTOSANITARY PRACTICES BEFORE WORK COMMENCES.

3.1.2. DO NOT BRING MORE VEHICLES INTO THE PLANTING AREA THAN NECESSARY AND KEEP VEHICLES ON SURFACED OR GRAVELED ROADS WHENEVER POSSIBLE TO MINIMIZE POTENTIAL FOR SOIL MOVEMENT.

3.1.3. TRAVEL OFF ROADS OR ON UNSURFACED ROADS SHOULD BE AVOIDED WHEN SOIL AND ROAD SURFACES ARE WET ENOUGH THAT SOIL WILL STICK TO VEHICLE TIRES AND UNDERCARRIAGES.

3.1.4. TO ALLOW FOR ADEQUATE DECONTAMINATION OF EQUIPMENT, TOOLS, GLOVES, AND SHOES, AVOID PLANTING UNDER OVERLY WET CONDITIONS OR WHEN SOIL IS SATURATED.

3.2. MINIMIZE UNNECESSARY MOVEMENT OF SOIL AND PLANT MATERIAL WITHIN THE PLANTING AREA, ESPECIALLY FROM HIGHER TO LOWER RISK AREAS
3.2.1 BRUSH OFF SOIL FROM TOOLS AND GLOVES WHEN MOVING BETWEEN SUCCESSIVE PLANTING SITES TO PREVENT REPEATED COLLECTION AND DEPOSITION OF SOIL ACROSS MULTIPLE SITES.

3.2.2. AVOID CONTAMINATING CLOTHING WITH SOIL DURING PLANTING OPERATIONS. BRUSH OFF SOIL ACCUMULATIONS BEFORE MOVING FROM ONE PLANTING SITE TO THE NEXT. USE NONPOROUS KNEE PADS THAT ARE CLEANED BETWEEN PLANTING SITES IF KNEELING IS NECESSARY.

3.2.3 WHEN POSSIBLE, PLANT NURSERY STOCK FROM A GIVEN BLOCK IN THE SAME LOCAL AREA RATHER THAN SPREADING IT WIDELY. IF A PROBLEM IS ASSOCIATED WITH A GIVEN BLOCK OF PLANTS, IT WILL BE EASIER TO DETECT AND DEAL WITH IT IF THE PLANTS ARE SPATIALLY GROUPED.

3.2.4. PHASE WORK TO MINIMIZE MOVEMENT BETWEEN AREAS WITH HIGH AND LOW RISK OF CONTAMINATION. WHERE POSSIBLE, COMPLETE WORK IN LOW RISK AREAS BEFORE MOVING TO HIGHER RISK AREAS. ALTERNATIVELY, ASSIGN PERSONNEL TO WORKING IN EITHER HIGH OR LOW RISK AREAS EXCLUSIVELY TO REDUCE THE NEED FOR DECONTAMINATION.

3.2.5. CLEAN SOIL AND PLANT DEBRIS FROM LARGE EQUIPMENT AND SANITIZE HAND TOOLS, BUCKETS, GLOVES, AND FOOTWEAR WHEN MOVING FROM HIGHER RISK TO LOWER RISK AREAS OR WHEN MOVING BETWEEN WIDELY SEPARATED PORTIONS OF THE PLANTING AREA.

3.2.6. ALL NON–PLANT MATERIALS TO BE INSTALLED AT THE SITE (IRRIGATION EQUIPMENT, EROSION CONTROL FABRIC, FENCING, ETC.) SHALL BE HANDLED TO PREVENT MOVEMENT OF SOIL WITHIN THE SITE, ESPECIALLY MOVEMENT FROM HIGHER RISK TO LOWER RISK AREAS. MATERIALS SHOULD BE KEPT FREE OF SOIL CONTAMINATION BY MAINTAINING THEM IN CLEAN VEHICLES OR CARTS, TRAILERS, ETC., OR STOCKPILING IN ELEVATED DRY AREAS ON CLEAN TARPS UNTIL USED.

4. CLEAN WATER SPECIFICATIONS
OBJECTIVE: USE ONLY UNCONTAMINATED, APPROPRIATELY–TREATED WATER FOR IRRIGATION.

4.1.1. WATER USED FOR IRRIGATING PLANTS NEEDS TO BE UNCONTAMINATED. SEE APPENDIX FOR SPECIFICATIONS.

PROCEDURES FOR SANITIZING TOOLS, SURFACES, AND FOOTWEAR

SURFACES AND TOOLS SHOULD BE CLEAN AND SANITIZED BEFORE USE. TOOLS AND WORKING SURFACES (E.G., PLANT CARTS) SHOULD BE SMOOTH AND NONPOROUS TO FACILITATE CLEANING AND SANITATION. WOOD HANDLES ON TOOLS SHOULD BE SEALED WITH A WATERPROOF COATING TO MAKE THEM EASIER TO SANITIZE.

BEFORE SANITIZING ITEMS, REMOVE ALL SOIL AND ORGANIC MATERIAL (ROOTS, SAP, ETC.) FROM THEIR SURFACES. IF NECESSARY, USE A DETERGENT SOLUTION AND BRUSH TO SCRUB OFF SURFACE CONTAMINANTS. THE SANITIZING AGENT MAY ALSO BE USED AS A CLEANING SOLUTION. SCREWDRIVERS OR SIMILAR IMPLEMENTS MAY BE NEEDED TO CLEAN SOIL OUT OF CREVICES OR SHOE TREADS. BRUSHES AND OTHER IMPLEMENTS USED TO HELP REMOVE SOIL MUST BE VISIBLY CLEAN AND SANITIZED AFTER USE.

AFTER SURFACE SOIL AND CONTAMINATION ARE REMOVED, TREAT THE SURFACE WITH ONE OF THE FOLLOWING SANITIZING AGENTS, ALLOWING THE APPROPRIATE CONTACT TIME BEFORE RINSING. IF SURFACES ARE CLEAN AND DRY, WET SURFACES THOROUGHLY AND ALLOW FOR THE APPROPRIATE CONTACT TIME LISTED. IF THE SANITIZER HAS BEEN USED TO HELP CLEAN THE SURFACE, USE FRESH SANITIZER TO RINSE OFF ANY DIRTY SOLUTION AND THEN ALLOW THE REQUIRED CONTACT TIME. IF TREATED SURFACES ARE WETTED WITH WATER, THE SANITIZING SOLUTION WILL BECOME DILUTED. APPLY ENOUGH SANITIZER TO COMPLETELY DISPLACE THE WATER FILM AND THEN ALLOW THE REQUIRED CONTACT TIME. SANITIZING AGENTS MAY BE APPLIED WITH SPRAY BOTTLES TO THOROUGHLY WET THE SURFACE. OBSERVE ALL APPROPRIATE SAFETY PRECAUTIONS TO PREVENT CONTACT WITH EYES OR SKIN WHEN USING THESE SOLUTIONS.

– 70–90% ETHYL OR ISOPROPYL ALCOHOL – SPRAY TO THOROUGHLY WET THE SURFACE AND ALLOW TO AIR DRY BEFORE USE

– FRESHLY DILUTED BLEACH SOLUTION (0.525% SODIUM HYPOCHLORITE, TABLE 1) FOR A MINIMUM OF 1 MINUTE (DUE TO CORROSIVITY, NOT ADVISED FOR STEEL OR OTHER MATERIALS DAMAGED BY BLEACH)

– QUATERNARY AMMONIUM DISINFECTANT – USE ACCORDING TO MANUFACTURER RECOMMENDATIONS, MAKING SURE THAT THE LABEL INDICATES THAT THE PRODUCT IS SUITABLE FOR YOUR USE SITUATION AND HAS ACTIVITY AGAINST PHYTOPHTHORA WHEN USED AS DIRECTED. SOLUTION SHOULD BE FRESHLY MADE OR TESTED TO ENSURE TARGET CONCENTRATION.

BEST MANAGEMENT PRACTICES

THE PROPOSED PROJECT WILL IMPLEMENT THE FOLLOWING BEST MANAGEMENT PRACTICES (BMPS) TO BE CONSISTENT WITH THE ANGELES NATIONAL FOREST (ANF) LAND MANAGEMENT PLAN (LMP; USDA 2005A AND B), THE FOREST SERVICE WATER QUALITY MANAGEMENT HANDBOOK (USFS 2011), AND THE USDA NATIONAL CORE BMP TECHNICAL GUIDE (USDA 2012).

ANF LMP DESIGN CRITERIA

PART 3 OF THE ANF LMP PROVIDES DESIGN CRITERIA FOR THE SOUTHERN CALIFORNIA NATIONAL FORESTS. THE PLAN STANDARDS REQUIRED BY 36 CFR 219 INCLUDE:

- S6: SEED TO BE USED ON NATIONAL FOREST SYSTEM LANDS WILL BE CERTIFIED TO BE FREE OF NOXIOUS WEEDS. WHERE AVAILABLE, ONLY LOCALLY COLLECTED NATIVE SEED WILL BE USED, OR SEEDS WILL BE USED FROM SPECIES THAT ARE NONINVASIVE AND NONPERSISTENT. WHEN AVAILABLE, WATTLES, MULCH AND LIVESTOCK FEED TO BE USED ON NATIONAL FOREST SYSTEM LANDS WILL BE CERTIFIED TO BE FREE OF NOXIOUS WEEDS.
- S12: WHEN IMPLEMENTING NEW PROJECTS IN AREAS THAT PROVIDE FOR THREATENED, ENDANGERED, PROPOSED, AND CANDIDATE SPECIES, USE DESIGN CRITERIA AND CONSERVATION PRACTICES SO THAT DISCRETIONARY USES AND FACILITIES PROMOTE THE CONSERVATION AND RECOVERY OF THESE SPECIES AND THEIR HABITATS. ACCEPT SHORT-TERM IMPACTS WHERE LONG-TERM EFFECTS WOULD PROVIDE A NET BENEFIT FOR THE SPECIES AND ITS HABITAT WHERE NEEDED TO ACHIEVE MULTIPLE-USE OBJECTIVES.
- S13: MANAGE CRITICAL BIOLOGICAL LAND USE ZONES SO THAT ACTIVITIES AND DISCRETIONARY USES ARE EITHER NEUTRAL OR BENEFICIAL FOR THE SPECIES AND HABITATS FOR WHICH THE AREA WAS ESTABLISHED. ACCEPT SHORT-TERM ADVERSE IMPACTS TO THREATENED, ENDANGERED, AND PROPOSED SPECIES IF SUCH IMPACTS WILL BE COMPENSATED BY THE ACCRUAL OF LONG-TERM BENEFITS TO HABITAT FOR THREATENED, ENDANGERED, AND CANDIDATE SPECIES.
- S15: WITHIN RIPARIAN CONSERVATION AREAS RETAIN SNAGS AND DOWNED LOGS UNLESS THEY ARE IDENTIFIED AS A THREAT TO LIFE, PROPERTY, OR SUSTAINABILITY OF THE RIPARIAN CONSERVATION AREA.
- S18: PROTECT KNOWN ACTIVE AND INACTIVE RAPTOR NEST AREAS. EXTENT OF PROTECTION WILL BE BASED ON PROPOSED MANAGEMENT ACTIVITIES, HUMAN ACTIVITIES EXISTING AT THE ONSET OF NESTING INITIATION, SPECIES, TOPOGRAPHY, VEGETATIVE COVER, AND OTHER FACTORS. WHEN APPROPRIATE, A NO-DISTURBANCE BUFFER AROUND ACTIVE NEST SITES WILL BE REQUIRED FROM NEST-SITE SELECTION TO FLEDGING.
- S22: EXCEPT WHERE IT MAY ADVERSELY AFFECT THREATENED AND ENDANGERED SPECIES, LINEAR STRUCTURES SUCH AS FENCES, MAJOR HIGHWAYS, UTILITY CORRIDORS, BRIDGE UPGRADES OR REPLACEMENTS, AND CANALS WILL BE DESIGNED AND BUILT TO ALLOW FOR FISH AND WILDLIFE MOVEMENT.
- S30: AVOID ACTIVITIES THAT RESULT IN REMOVAL, CRUSHING, BURYING, BURNING, OR MOWING OF HOST PLANTS WITHIN CRITICAL AND OCCUPIED HABITAT FOR THREATENED, ENDANGERED, AND PROPOSED BUTTERFLY SPECIES; UNLESS GUIDED DIFFERENTLY BY A SPECIES-SPECIFIC CONSULTATION.
- S34: WHERE A THREATENED, ENDANGERED, PROPOSED, CANDIDATE, OR SENSITIVE SPECIES OCCURS IN A RECREATION SITE OR AREA, TAKE STEPS TO AVOID OR MINIMIZE NEGATIVE IMPACTS TO THE THREATENED, ENDANGERED, PROPOSED, CANDIDATE OR SENSITIVE SPECIES AND ITS HABITAT. USE THE LEAST RESTRICTIVE ACTION THAT WILL EFFECTIVELY MITIGATE ADVERSE IMPACTS TO THE SPECIES AND HABITAT.

FOREST SERVICE WATER QUALITY MANAGEMENT HANDBOOK BMPS

THE FOREST SERVICE WATER QUALITY MANAGEMENT HANDBOOK (HANDBOOK) FOR REGION 5 PROVIDES BMPS FOR FOREST PROJECTS. THE PROPOSED ACTION WOULD FOLLOW ALL BMPS FROM THE HANDBOOK INCLUDING:

- 2.10 PARKING AND STAGING AREAS- CONSTRUCT, INSTALL, AND MAINTAIN AN APPROPRIATE LEVEL OF DRAINAGE AND RUNOFF TREATMENT FOR PARKING AND STAGING AREAS TO PROTECT WATER, AQUATIC, AND RIPARIAN RESOURCES.
- 2.13 EROSION CONTROL PLANS- EFFECTIVELY LIMIT AND MITIGATE EROSION AND SEDIMENTATION FROM ANY GROUND-DISTURBING ACTIVITIES, THROUGH PLANNING PRIOR TO COMMENCEMENT OF PROJECT ACTIVITY, AND THROUGH PROJECT MANAGEMENT AND ADMINISTRATION DURING PROJECT IMPLEMENTATION.
- 4.9 PROTECTING WATER QUALITY WITHIN DEVELOPED AND DISPERSED RECREATION AREAS- TO PROTECT WATER QUALITY BY REGULATING THE DISCHARGE AND DISPOSAL OF POTENTIAL POLLUTANTS.
- 5.4 REVEGETATION OF SURFACE-DISTURBED AREAS- TO PROTECT WATER QUALITY BY MINIMIZING SOIL EROSION THROUGH THE STABILIZING INFLUENCE OF VEGETATION FOLIAGE AND ROOT NETWORK.

USDA NATIONAL CORE BMPS

THE USDA NATIONAL CORE BMP TECHNICAL GUIDE PROVIDES BMPS FOR NATIONAL FOREST SERVICE LANDS. THE PROPOSED ACTION WOULD CONSIDER THE FOLLOWING BMPS:

- PLAN-2: PROJECT PLANNING AND ANALYSIS- USE THE PROJECT PLANNING, ENVIRONMENTAL ANALYSIS, AND DECISION MAKING PROCESSES TO INCORPORATE WATER QUALITY MANAGEMENT BMPS INTO PROJECT DESIGN AND IMPLEMENTATION.
- PLAN-3: AQUATIC MANAGEMENT ZONE PLANNING- MAINTAIN AND IMPROVE OR RESTORE THE CONDITION OF LAND AROUND AND ADJACENT TO WATERBODIES IN THE CONTEXT OF THE ENVIRONMENT IN WHICH THEY ARE LOCATED, RECOGNIZING THEIR UNIQUE VALUES AND IMPORTANCE TO WATER QUALITY WHILE IMPLEMENTING LAND AND RESOURCE MANAGEMENT ACTIVITIES.
- REC-1: RECREATION PLANNING- USE THE APPLICABLE RECREATION PLANNING PROCESS TO DEVELOP MEASURES TO AVOID, MINIMIZE, OR MITIGATE ADVERSE EFFECTS TO SOIL, WATER QUALITY, AND RIPARIAN RESOURCES DURING RECREATION ACTIVITIES.
- REC-2: DEVELOPED RECREATION SITES- AVOID, MINIMIZE, OR MITIGATE ADVERSE EFFECTS TO SOIL, WATER QUALITY, AND RIPARIAN RESOURCES AT DEVELOPED RECREATION SITES BY MAINTAINING DESIRED LEVELS OF GROUND COVER, LIMITING SOIL COMPACTION, AND MINIMIZING POLLUTANTS ENTERING WATERBODIES.
- REC-4: MOTORIZED AND NONMOTORIZED TRAILS- AVOID, MINIMIZE, OR MITIGATE ADVERSE EFFECTS TO SOIL, WATER QUALITY, AND RIPARIAN RESOURCES BY CONTROLLING SOIL EROSION, EROSION OF TRAIL SURFACE MATERIALS, AND WATER QUALITY PROBLEMS ORIGINATING FROM CONSTRUCTION, MAINTENANCE, AND USE OF MOTORIZED AND NONMOTORIZED TRAILS.
- ROAD-9: PARKING AND STAGING AREAS- AVOID, MINIMIZE, OR MITIGATE ADVERSE EFFECTS TO SOIL, WATER QUALITY, AND RIPARIAN RESOURCES WHEN CONSTRUCTING AND MAINTAINING PARKING AND STAGING AREAS.

DIAL BEFORE YOU DIG
DIAL 8-1-1 FROM ANY PHONE OR
VIA WEB AT: http://www.digalert.org/digexpress.asp
DIGALERT
PLAY IT SAFE. DIAL BEFORE YOU DIG!
AT LEAST TWO WORKING DAYS PRIOR TO EXCAVATING
SERVING NINE SOUTHERN CALIFORNIA COUNTIES

REVISIONS	DATE
1 BID ALTERNATES	05/16/2026
2 PLAN REVISIONS	05/16/2026
3 CXT RESTROOM	05/16/2026

WATERSHED CONSERVATION AUTHORITY
100 N OLD SAN GABRIEL CANYON ROAD
AZUSA, CA 91702
PHONE: (626) 815-1019

Lynne Dwyer
Landscape Architect
2616 NORTH FIGUEROA, SUITE A
LOS ANGELES, CA 90065
(323) 221-9500

SHEET TITLE
ENVIRONMENTAL PROTECTION MEASURES

PROJECT TITLE
OAKS STAIRWAY & OVERLOOK
EAST FORK, SAN GABRIEL RIVER

LICENSED LANDSCAPE ARCHITECT
LYNNE DWYER
5/31/2027
Renewal Date
Date
LICENSE NO. 5607
STATE OF CALIFORNIA

DRAWN BY:	SH
CHECKED BY:	LD
PROJECT NO.	OS2019
DATE:	JUNE 1 2026

L-5.00

GUIDELINES TO MINIMIZE PHYTOPHTHORA CONTAMINATION IN RESTORATION PROJECTS

WORKING GROUP FOR PHYTOPHTHORAS IN NATIVE HABITATS OCTOBER 2016

THESE GUIDELINES AIM TO AVOID CONTAMINATION OF RESTORATION SITES WITH EXOTIC PATHOGENIC PHYTOPHTHORA SPECIES OR OTHER PLANT PATHOGENS DURING PLANTING AND RELATED ACTIVITIES.

DEFINITIONS:

HOLDING FACILITY OR NURSERY: A FACILITY WHERE NURSERY STOCK IS MAINTAINED FOR A SHORT TO EXTENDED PERIOD OF TIME PRIOR TO PLANTING. PLANT MAINTENANCE ACTIVITIES MAY INCLUDE IRRIGATION, FERTILIZATION OR LIGHT PRUNING, AS NECESSARY. NURSERIES INVOLVED IN MOST OTHER ACTIVITIES, INCLUDING PROPAGATION OR REPOTTING ARE CONSIDERED PRODUCTION NURSERIES.

JOB SITE: THE JOB SITE INCLUDES AREAS FOR PLANTING, SOIL STOCKPILING, PARKING, AND ACCESS ROADS WITHIN AND LEADING TO THE SITE.

NURSERY STOCK: ALL TYPES OF NURSERY GROWN PLANTS.

PLANTING AREA: AREA BEING PLANTED FOR HABITAT RESTORATION, EROSION CONTROL, OR OTHER PURPOSES.

PLANTING SITE: AN INDIVIDUAL PLANTING BASIN OR OTHER SPOT, TYPICALLY NO LARGER THAN ONE SQUARE YARD, WHERE AN INDIVIDUAL PLANT OR SEVERAL GROUPED PLANTS WILL BE INSTALLED.

SANITIZE: CLEAN AND TREAT WITH A SANITIZING AGENT OR VIA A LETHAL HEAT EXPOSURE TO KILL PLANT PATHOGENS PRESENT AS EXTERNAL CONTAMINATION.

SANITIZING AGENT: MATERIALS SUCH AS BLEACH (SODIUM HYPOCHLORITE SOLUTIONS), ALCOHOL, QUATERNARY AMMONIUM COMPOUNDS, AND PEROXIDES THAT CAN DIRECTLY KILL EXPOSED PROPAGULES OF PHYTOPHTHORA OR OTHER PLANT PATHOGENS WHEN USED PROPERLY. MOST SANITIZING AGENTS CAN ALSO KILL A WIDE VARIETY OF BACTERIA AND DEACTIVATE MANY VIRUSES. NOTE THAT MOST MATERIALS REFERRED TO AS FUNGICIDES ARE APPLIED TO PLANTS TO SUPPRESS DISEASE BUT MAY NOT KILL THE PATHOGENS AND ARE NOT SANITIZING AGENTS.

CONSTRUCTION PROJECTS

IN AN EFFORT TO MINIMIZE THE SPREAD OF PLANT PATHOGENS THE EXTERIOR AND INTERIOR OF ALL EQUIPMENT AND TOOLS MUST BE CLEAN AND FREE OF DEBRIS, SOIL AND MUD (INCLUDING TIRES, TREADS, WHEEL WELLS AND UNDERCARRIAGE) PRIOR TO ARRIVAL AT A NEW JOB SITE.

GENERAL GUIDANCE – SUGGESTED STANDARD OPERATING PROCEDURES:

A. VEHICLES NEED TO STAY ON ESTABLISHED ROADS UNLESS INFEASIBLE.

B. IN GENERAL, VEHICLES AND EQUIPMENT NEED TO BE MAINTAINED CLEAN – INTERIOR AND EXTERIOR FREE OF MUD, DEBRIS AND SOIL ESPECIALLY DURING THE WET SEASON.

C. IN GENERAL, WORK SHOES NEED TO BE KEPT CLEAN– INSPECT SHOE SOLES AND KNOCK MUD, DEBRIS AND SOIL OFF TREADS BEFORE MOVING TO A NEW JOB SITE.

D. TO MINIMIZE THE POTENTIAL FOR SPREADING POTENTIALLY CONTAMINATED SOIL AND TIME REQUIRED FOR DECONTAMINATION, IF POSSIBLE, AVOID VEHICLE TRAFFIC AND FIELD WORK WHEN SOILS ARE WET ENOUGH TO STICK READILY TO SHOES, TOOLS, EQUIPMENT AND TIRES.

PLANTING AT FIELD SITES

OVERVIEW: THREE GENERAL ROUTES FOR THE SPREAD OF PHYTOPHTHORA AND OTHER SOILBORNE PLANT PATHOGENS ARE ADDRESSED IN THESE GUIDELINES. THESE ROUTES ARE (1) CONTAMINATION OF PLANTING MATERIAL, INCLUDING CLEAN NURSERY STOCK, AND OTHER MATERIALS INSTALLED AT THE SITE, (2) INADVERTENT INTRODUCTION OF PATHOGENS TO A JOB SITE FROM OTHER OUTSIDE SOURCES (E.G., VIA CONTAMINATED EQUIPMENT), AND (3) POTENTIAL MOVEMENT OF UNDETECTED CONTAMINATION WITHIN THE PLANTING AREA.

THESE GUIDELINES ASSUME THAT ALL NURSERY STOCK WAS ORIGINALLY GROWN UNDER PHYTOSANITARY CONDITIONS AND TESTED AS REMAINING FREE FROM DISEASE IN THE NURSERY (REFER TO NURSERY GUIDELINES). THESE GUIDELINES ADDRESS HOW TO PROTECT THE PLANTING AREA FROM SUBSEQUENT CONTAMINATION DURING THE DELIVERY, STORAGE ONSITE, AND INSTALLATION OF PLANTING STOCK AND MATERIALS.

1. PREVENT CONTAMINATION OF CLEAN NURSERY STOCK OR OTHER CLEAN PLANT MATERIALS

PLANTING STOCK SHALL BE PROTECTED FROM POTENTIAL CONTAMINATION FROM THE POINT THAT IT LEAVES THE PRODUCTION NURSERY OR COLLECTION SITE UNTIL PLANTING. NOTE THAT NURSERY STOCK HAS A HIGH RISK OF INFECTION BY PHYTOPHTHORA SPECIES IF EXPOSED TO THESE PATHOGENS. EXCLUDING THESE PATHOGENS PROVIDES THE ONLY VIABLE OPTION FOR MAINTAINING OUTPLANTED NURSERY STOCK FREE OF PHYTOPHTHORA.

1.1. MAINTAINING NURSERY STOCK IN A HOLDING FACILITY

WHEN HOLDING STOCK FOR AN EXTENDED PERIOD (AFTER DELIVERY FROM PRODUCTION NURSERY AND BEFORE PLANTING), THE FOLLOWING PRACTICES NEED TO BE FOLLOWED TO PREVENT CONTAMINATION OF THE NURSERY STOCK WITH PHYTOPHTHORA.

1.1.1. DELIVERED NURSERY PLANTS THAT WILL BE HELD BEFORE PLANTING SHALL BE TRANSFERRED TO CLEANED AND SANITIZED RAISED BENCHES AND MAINTAINED AS DESCRIBED IN "GUIDELINES TO MINIMIZE PHYTOPHTHORA PATHOGENS FOR HOLDING (NON–PRODUCTION) NURSERIES AT RESTORATION SITES, SECTION 3."

1.2. HANDLING AND TRANSPORTING NURSERY PLANTS AT THE JOB SITE

1.2.1. NURSERY PLANTS SHALL BE TRANSPORTED ON OR IN VEHICLES OR EQUIPMENT THAT HAVE BEEN CLEANED BEFORE LOADING THE STOCK. TRUCK BEDS, RACKS, OR OTHER SURFACES NEED TO BE SWEPT, BLOWN WITH COMPRESSED AIR AND/OR POWER WASHED AS NEEDED SO THEY ARE VISIBLY FREE OF SOIL AND PLANT DETRITUS. MORE INFORMATION ON SANITIZING SURFACES ARE DESCRIBED IN THE APPENDIX.

1.2.2. KEEP PLANTS IN SANITIZED VEHICLES OR ON SANITIZED CARTS, TRAILERS, ETC. UNTIL DELIVERED TO THEIR PLANTING SITES. (MORE INFORMATION MAY BE FOUND IN SECTIONS 1.3.3. AND 1.3.4.)

1.2.3 AT THE JOB SITE, PLANTS SHALL BE HANDLED TO PREVENT CONTAMINATION UNTIL DELIVERED TO EACH PLANTING SITE. NURSERY STOCK SHALL NOT BE PLACED ON THE SOIL OR OTHER POTENTIALLY CONTAMINATED SURFACES UNTIL THEY ARE PLACED AT THEIR SPECIFIC PLANTING SITES.

1.2.4 IF IT IS NECESSARY TO OFFLOAD PLANTS AT THE JOB SITE, PLANTS MAY BE PLACED ON CLEAN WATERPROOF PLASTIC TARPS OR OTHER CLEAN, SANITIZED SURFACES. IF TARPS ARE USED FOR HOLDING PLANTS, ONE SURFACE NEEDS TO BE DEDICATED FOR CONTACT WITH NURSERY STOCK AND WILL BE CLEANED AND SANITIZED TO MAINTAIN PHYTOSANITARY CONDITIONS.

1.3. OTHER PLANTING SITE INPUTS

1.3.1 WASHING, SOAKING, OR IRRIGATION OF PLANT MATERIAL SHALL BE CONDUCTED USING CLEAN WATER SOURCES AS SPECIFIED IN THE APPENDIX BELOW. UNTREATED SURFACE WATERS SHOULD NOT BE USED FOR THESE PURPOSES.

1.3.2. ON–SITE OR OFF–SITE COLLECTION OF PLANT MATERIALS, INCLUDING SEED AND CUTTINGS FOR DIRECT PLANTING, SHALL BE CONDUCTED IN A PHYTOSANITARY MANNER (SEE GUIDELINES FOR COLLECTION PRACTICES AT WWW.CALPHYTOS.ORG).

1.3.3. PRIOR TO DELIVERY TO THE PLANTING AREAS, MULCH, COMPOST, SOIL AMENDMENTS, INOCULANTS, AND OTHER ORGANIC PRODUCTS NEED TO BE EXAMINED AND DETERMINED TO BE LOW–RISK FOR PATHOGEN INTRODUCTION. ACCEPTABLE MATERIALS ARE THOSE THAT ARE FREE OF CONTAMINATION BY PLANT PATHOGENS BASED ON THEIR COMPOSITION OR MANUFACTURING CONDITIONS, OR THAT HAVE BEEN EXPOSED TO AN EFFECTIVE HEAT TREATMENT TO ELIMINATE PATHOGENS. SUCH MATERIALS MUST BE HANDLED AND STORED IN A MANNER THAT PREVENTS CONTAMINATION. AT THE JOB SITE, DELIVERED MATERIALS SHALL BE HANDLED TO PREVENT CONTAMINATION UNTIL DELIVERED TO EACH PLANTING SITE IN THE SAME MANNER SPECIFIED FOR NURSERY STOCK IN SECTION 1.2 ABOVE.

1.3.4. ALL OTHER MATERIALS TO BE INSTALLED AT THE SITE SHALL BE OF NEW OR SANITIZED MATERIAL THAT HAS NOT BEEN STORED IN CONTACT WITH SOIL, UNTREATED SURFACE WATERS, OR OTHER POTENTIALLY CONTAMINATED MATERIALS. THIS INCLUDES IRRIGATION SUPPLIES (SUCH AS PIPE, FITTINGS, VALVES, DRIP LINE, EMITTERS, ETC.), EROSION CONTROL FABRICS, FENCING, STAKES, POSTS, AND OTHER PLANTING SITE INPUTS.

2. CLEANING AND SANITATION REQUIRED BEFORE ENTERING PLANTING AREA TO PREVENT INTRODUCING CONTAMINATION FROM OTHER LOCATIONS

PHYTOPHTHORA CONTAMINATION CAN BE PRESENT IN AGRICULTURAL AND LANDSCAPED AREAS, IN COMMERCIAL NURSERY STOCK, AND IN SOME INFESTED NATIVE OR RESTORED HABITAT AREAS. CONTAMINATION CAN BE SPREAD VIA SOIL, PLANT MATERIAL AND DEBRIS, AND WATER FROM INFESTED AREAS. ARRIVING AT THE SITE WITH CLEAN VEHICLES, EQUIPMENT, TOOLS, FOOTWEAR, AND CLOTHING HELPS PREVENT UNINTENTIONAL CONTAMINATION OF THE PLANTING SITE FROM OUTSIDE SOURCES.

2.1. VEHICLES, EQUIPMENT, AND TOOLS

2.1.1. EQUIPMENT, VEHICLES AND LARGE TOOLS MUST BE FREE OF SOIL AND DEBRIS ON TIRES, WHEEL WELLS, VEHICLE UNDERCARRIAGES, AND OTHER SURFACES BEFORE ARRIVING AT THE PLANTING AREA. A HIGH PRESSURE WASHER AND/OR COMPRESSED AIR MAY BE USED TO ENSURE THAT SOIL AND DEBRIS ARE COMPLETELY REMOVED. VEHICLES THAT ONLY TRAVEL AND PARK ON PAVED ROADS DO NOT REQUIRE EXTERNAL CLEANING.

2.1.2. THE INTERIOR OF EQUIPMENT (CABS, ETC.) SHOULD BE FREE OF MUD, SOIL, GRAVEL AND OTHER POTENTIALLY CONTAMINATED MATERIAL. INTERIORS SHOULD BE VACUUMED, WASHED, AND/OR TREATED WITH SANITIZING AGENTS AS NEEDED TO ELIMINATE PATHOGEN PROPAGULES THAT COULD BE TRANSFERRED TO THE PLANTING AREA.

2.1.3. SMALL TOOLS AND OTHER SMALL EQUIPMENT (INCLUDING HOSES, QUICK COUPLERS, HOSE NOZZLES, AND IRRIGATION WANDS) NEED TO BE WASHED TO BE FREE OF SOIL OR OTHER CONTAMINATION AND SANITIZED (SEE APPENDIX).

2.1.4. HOSES SHALL BE NEW OR PREVIOUSLY USED ONLY FOR CLEAN WATER SOURCES (SEE APPENDIX).

2.2. FOOTWEAR AND CLOTHING

2.2.1. SOLES AND UPPERS OF FOOTWEAR NEED TO BE VISIBLY FREE OF DEBRIS AND SOIL BEFORE ARRIVING AT THE PLANTING AREA. (SEE THE APPENDIX FOR MORE DETAILS.)

2.2.2. AT THE START OF WORK AT EACH NEW JOB SITE, WORKER CLOTHING SHALL BE FREE OF ALL MUD, SOIL OR DETRITUS. IF CLOTHING IS NOT FRESHLY LAUNDERED, ALL DEBRIS AND ADHERED SOIL SHOULD BE REMOVED BY BRUSHING WITH A STIFF BRUSH.

2.2.3. GLOVES AND NON–POROUS KNEE PADS MUST BE NEW (IF DISPOSABLE) OR LAUNDERED/SANITIZED AT THE START OF EACH WORK DAY, AND/OR CLEAN COVERALLS MUST BE WORN. NON–DISPOSABLE GLOVES SHOULD BE MADE OF OR COATED WITH MATERIAL, SUCH AS NITRILE, THAT CAN BE SANITIZED.

3. PREVENT POTENTIAL SPREAD OF CONTAMINATION WITHIN PLANTING AREAS

PHYTOPHTHORA CAN ALSO BE SPREAD WITHIN PLANTINGS AREAS IF SOME PORTIONS OF THE SITE ARE CONTAMINATED. HOWEVER, IT IS NOT POSSIBLE TO IDENTIFY EVERY PORTION OF A PLANTING AREA THAT MAY CONTAIN PHYTOPHTHORA. BECAUSE PHYTOPHTHORA CONTAMINATION IS NOT VISIBLE, WORKING PRACTICES SHOULD MINIMIZE THE MOVEMENT OF SOIL WITHIN THE PLANTING AREA TO REDUCE THE LIKELIHOOD OF PATHOGEN SPREAD.

NOTE THAT AREAS WITH HIGHER RISK OF PHYTOPHTHORA INFESTATION INCLUDE AREAS ADJACENT TO PLANTED LANDSCAPING, AREAS PREVIOUSLY PLANTED WITH PHYTOPHTHORA–INFECTED STOCK, AREAS WITH EXISTING OR RECENTLY REMOVED WOODY VEGETATION, DISTURBED WETLANDS, AND AREAS DIRECTLY ALONG WATERCOURSES. AREAS WITH LOW RISK OF CONTAMINATION TYPICALLY INCLUDE UPLAND SITES WITH ONLY GRASSY VEGETATION OR SITES WHERE SURFACE SOILS HAVE BEEN REMOVED.

3.1. WORKER TRAINING AND SITE ACCESS

3.1.1. BEFORE ENTERING THE JOB SITE, FIELD WORKERS NEED TO RECEIVE TRAINING THAT INCLUDES INFORMATION ON PHYTOPHTHORA PATHOGENS AND HOW TO PREVENT THE SPREAD OF THESE AND OTHER SOILBORNE ORGANISMS BY FOLLOWING APPROVED PHYTOSANITARY PROCEDURES. WORKERS SHOULD ALSO BE INFORMED ABOUT ANY SITE–SPECIFIC PHYTOSANITARY PRACTICES BEFORE WORK COMMENCES.

3.1.2. DO NOT BRING MORE VEHICLES INTO THE PLANTING AREA THAN NECESSARY AND KEEP VEHICLES ON SURFACED OR GRAVELED ROADS WHENEVER POSSIBLE TO MINIMIZE POTENTIAL FOR SOIL MOVEMENT.

3.1.3. TRAVEL OFF ROADS OR ON UNSURFACED ROADS SHOULD BE AVOIDED WHEN SOIL AND ROAD SURFACES ARE WET ENOUGH THAT SOIL WILL STICK TO VEHICLE TIRES AND UNDERCARRIAGES.

3.1.4. TO ALLOW FOR ADEQUATE DECONTAMINATION OF EQUIPMENT, TOOLS, GLOVES, AND SHOES, AVOID PLANTING UNDER OVERLY WET CONDITIONS OR WHEN SOIL IS SATURATED.

3.2. MINIMIZE UNNECESSARY MOVEMENT OF SOIL AND PLANT MATERIAL WITHIN THE PLANTING AREA, ESPECIALLY FROM HIGHER TO LOWER RISK AREAS

3.2.1 BRUSH OFF SOIL FROM TOOLS AND GLOVES WHEN MOVING BETWEEN SUCCESSIVE PLANTING SITES TO PREVENT REPEATED COLLECTION AND DEPOSITION OF SOIL ACROSS MULTIPLE SITES.

3.2.2. AVOID CONTAMINATING CLOTHING WITH SOIL DURING PLANTING OPERATIONS. BRUSH OFF SOIL ACCUMULATIONS BEFORE MOVING FROM ONE PLANTING SITE TO THE NEXT. USE NONPOROUS KNEE PADS THAT ARE CLEANED BETWEEN PLANTING SITES IF KNEELING IS NECESSARY.

3.2.3 WHEN POSSIBLE, PLANT NURSERY STOCK FROM A GIVEN BLOCK IN THE SAME LOCAL AREA RATHER THAN SPREADING IT WIDELY. IF A PROBLEM IS ASSOCIATED WITH A GIVEN BLOCK OF PLANTS, IT WILL BE EASIER TO DETECT AND DEAL WITH IT IF THE PLANTS ARE SPATIALLY GROUPED.

3.2.4. PHASE WORK TO MINIMIZE MOVEMENT BETWEEN AREAS WITH HIGH AND LOW RISK OF CONTAMINATION. WHERE POSSIBLE, COMPLETE WORK IN LOW RISK AREAS BEFORE MOVING TO HIGHER RISK AREAS. ALTERNATIVELY, ASSIGN PERSONNEL TO WORKING IN EITHER HIGH OR LOW RISK AREAS EXCLUSIVELY TO REDUCE THE NEED FOR DECONTAMINATION.

3.2.5. CLEAN SOIL AND PLANT DEBRIS FROM LARGE EQUIPMENT AND SANITIZE HAND TOOLS, BUCKETS, GLOVES, AND FOOTWEAR WHEN MOVING FROM HIGHER RISK TO LOWER RISK AREAS OR WHEN MOVING BETWEEN WIDELY SEPARATED PORTIONS OF THE PLANTING AREA.

3.2.6. ALL NON–PLANT MATERIALS TO BE INSTALLED AT THE SITE (IRRIGATION EQUIPMENT, EROSION CONTROL FABRIC, FENCING, ETC.) SHALL BE HANDLED TO PREVENT MOVEMENT OF SOIL WITHIN THE SITE, ESPECIALLY MOVEMENT FROM HIGHER RISK TO LOWER RISK AREAS. MATERIALS SHOULD BE KEPT FREE OF SOIL CONTAMINATION BY MAINTAINING THEM IN CLEAN VEHICLES OR CARTS, TRAILERS, ETC., OR STOCKPILING IN ELEVATED DRY AREAS ON CLEAN TARPS UNTIL USED.

4. CLEAN WATER SPECIFICATIONS

OBJECTIVE: USE ONLY UNCONTAMINATED, APPROPRIATELY–TREATED WATER FOR IRRIGATION.

4.1.1. WATER USED FOR IRRIGATING PLANTS NEEDS TO BE UNCONTAMINATED. SEE APPENDIX FOR SPECIFICATIONS.

PROCEDURES FOR SANITIZING TOOLS, SURFACES, AND FOOTWEAR

SURFACES AND TOOLS SHOULD BE CLEAN AND SANITIZED BEFORE USE. TOOLS AND WORKING SURFACES (E.G., PLANT CARTS) SHOULD BE SMOOTH AND NONPOROUS TO FACILITATE CLEANING AND SANITATION. WOOD HANDLES ON TOOLS SHOULD BE SEALED WITH A WATERPROOF COATING TO MAKE THEM EASIER TO SANITIZE.

BEFORE SANITIZING ITEMS, REMOVE ALL SOIL AND ORGANIC MATERIAL (ROOTS, SAP, ETC.) FROM THEIR SURFACES. IF NECESSARY, USE A DETERGENT SOLUTION AND BRUSH TO SCRUB OFF SURFACE CONTAMINANTS. THE SANITIZING AGENT MAY ALSO BE USED AS A CLEANING SOLUTION. SCREWDRIVERS OR SIMILAR IMPLEMENTS MAY BE NEEDED TO CLEAN SOIL OUT OF CREVICES OR SHOE TREADS. BRUSHES AND OTHER IMPLEMENTS USED TO HELP REMOVE SOIL MUST BE VISIBLY CLEAN AND SANITIZED AFTER USE.

AFTER SURFACE SOIL AND CONTAMINATION ARE REMOVED, TREAT THE SURFACE WITH ONE OF THE FOLLOWING SANITIZING AGENTS, ALLOWING THE APPROPRIATE CONTACT TIME BEFORE RINSING. IF SURFACES ARE CLEAN AND DRY, WET SURFACES THOROUGHLY AND ALLOW FOR THE APPROPRIATE CONTACT TIME LISTED. IF THE SANITIZER HAS BEEN USED TO HELP CLEAN THE SURFACE, USE FRESH SANITIZER TO RINSE OFF ANY DIRTY SOLUTION AND THEN ALLOW THE REQUIRED CONTACT TIME. IF TREATED SURFACES ARE WETTED WITH WATER, THE SANITIZING SOLUTION WILL BECOME DILUTED. APPLY ENOUGH SANITIZER TO COMPLETELY DISPLACE THE WATER FILM AND THEN ALLOW THE REQUIRED CONTACT TIME. SANITIZING AGENTS MAY BE APPLIED WITH SPRAY BOTTLES TO THOROUGHLY WET THE SURFACE. OBSERVE ALL APPROPRIATE SAFETY PRECAUTIONS TO PREVENT CONTACT WITH EYES OR SKIN WHEN USING THESE SOLUTIONS.

– 70–90% ETHYL OR ISOPROPYL ALCOHOL – SPRAY TO THOROUGHLY WET THE SURFACE AND ALLOW TO AIR DRY BEFORE USE

– FRESHLY DILUTED BLEACH SOLUTION (0.525% SODIUM HYPOCHLORITE, TABLE 1) FOR A MINIMUM OF 1 MINUTE (DUE TO CORROSIVITY, NOT ADVISED FOR STEEL OR OTHER MATERIALS DAMAGED BY BLEACH)

– QUATERNARY AMMONIUM DISINFECTANT – USE ACCORDING TO MANUFACTURER RECOMMENDATIONS, MAKING SURE THAT THE LABEL INDICATES THAT THE PRODUCT IS SUITABLE FOR YOUR USE SITUATION AND HAS ACTIVITY AGAINST PHYTOPHTHORA WHEN USED AS DIRECTED. SOLUTION SHOULD BE FRESHLY MADE OR TESTED TO ENSURE TARGET CONCENTRATION.

Table 1. Dilutions of commonly available bleach products needed to obtain approximately 0.525% sodium hypochlorite concentrations (5000 ppm available chlorine).

Percent sodium hypochlorite in bleach	Parts bleach	Parts water	Diluted bleach percent sodium hypochlorite
5.25%	1	9	0.525%
6.0%	1	10.4	0.526%
8.25%	1	14.6	0.529%
8.3%	1	14.8	0.525%

For example, adding 100 ml of 5.25% bleach to 900 ml of water will make 1000 ml of 0.525% NaOCl solution. If using 8.3% bleach, add 100 ml of bleach to 1480 ml of water to make 1580 ml of 0.525% NaOCl.

DIAL BEFORE YOU DIG
DIAL 8-1-1 FROM ANY PHONE OR
VIA WEB AT: http://www.digalert.org/digexpress.asp
DIGALERT
PLAY IT SAFE. DIAL BEFORE YOU DIG!
AT LEAST TWO WORKING DAYS PRIOR TO EXCAVATING
SERVING NINE SOUTHERN CALIFORNIA COUNTIES

REVISIONS	DATE
1 BID ALTERNATES	05/16/2026
2 PLAN REVISIONS	05/16/2026
3 CXT RESTROOM	05/16/2026

WATERSHED CONSERVATION AUTHORITY
100 N OLD SAN GABRIEL CANYON ROAD
AZUSA, CA 91702
PHONE: (626) 815-1019

Lynne Dwyer
Landscape Architect
2616 NORTH FIGUEROA, SUITE A
LOS ANGELES, CA 90065
(323) 221-9500

SHEET TITLE
ENVIRONMENTAL PROTECTION GUIDELINES

PROJECT TITLE
OAKS STAIRWAY & OVERLOOK
EAST FORK, SAN GABRIEL RIVER

LICENSED LANDSCAPE ARCHITECT
LYNNE DWYER
Signature
5/31/2027
Renewal Date
Date
LICENSE NO. 3607
STATE OF CALIFORNIA

DRAWN BY:	SH
CHECKED BY:	LD
PROJECT NO.	OS2019
DATE:	JUNE 1 2026

L-5.01

STREET IMPROVEMENTS

GENERAL NOTES:

1. A PERMIT SHALL BE OBTAINED AND FEES PAID FOR CONSTRUCTION INSPECTION TO THE DEPARTMENT OF PUBLIC WORKS AT THE PERMIT COUNTER, 900 SOUTH FREMONT AVENUE, 3RD FLOOR, ALHAMBRA AT LEAST 72 HOURS PRIOR TO STARTING WORK UNDER THIS CONTRACT.
2. ~~WHEN WORK IS WITHIN A CONTRACT CITY, THE CONTRACTOR MUST CONTACT THE DIRECTOR OF PUBLIC WORKS OF THAT CITY TO DETERMINE THE LOCATION TO PAY THE INSPECTION FEES.~~
3. THE CONTRACTOR SHALL CONTACT THE DISTRICT OFFICE LISTED ON THE PERMIT APPLICATION TO ARRANGE FOR AN ACCEPTABLE CONSTRUCTION START DATE.
4. A PERMIT MUST BE OBTAINED FROM THE LOS ANGELES COUNTY DEPARTMENT OF PUBLIC WORKS, CONSTRUCTION DIVISION AT (626) 458-3129 FOR ALL STORM DRAIN CONNECTIONS.
5. ~~FOR ALL WORK WITHIN CALTRANS R/W OR INCORPORATED CITIES, SUBJECT TO INSPECTION AND APPROVAL OF CALTRANS OR CITIES, OBTAIN A PERMIT FROM CALTRANS OR OTHER CITIES 30 DAYS PRIOR TO CONSTRUCTION WITHIN THEIR RIGHT-OF-WAY.~~
6. ALL WORK SHALL CONFORM TO THE "SPPWC" (STANDARD PLANS FOR PUBLIC WORKS CONSTRUCTION, ALSO COMMONLY REFERRED TO AS "APWA") AND THE STANDARD SPECIFICATIONS FOR PUBLIC WORKS CONSTRUCTION, SUPPLEMENTED WITH THE LOS ANGELES COUNTY DEPARTMENT OF PUBLIC WORKS STANDARD PLANS 2000 EDITION. THE LATEST EDITIONS OF THESE MANUALS SHALL BE USED UNLESS OTHERWISE NOTED ON THE PLANS.
7. WORK IN PUBLIC STREETS, ONCE BEGUN, SHALL BE PROSECUTED TO COMPLETION WITHOUT DELAY SO AS TO PROVIDE MINIMUM INCONVENIENCE TO ADJACENT PROPERTY OWNERS AND TO THE TRAVELING PUBLIC. FAILURE TO COMPLY WITH THIS REQUIREMENT IS A VIOLATION OF TITLE 16 OF THE COUNTY CODE, HIGHWAY PERMIT CODE.
8. THE CONTRACTOR SHALL TAKE ALL NECESSARY AND PROPER PRECAUTIONS TO PROTECT ADJACENT PROPERTIES FROM ALL DAMAGE THAT MAY OCCUR FROM STORM WATER RUNOFF AND/OR DEPOSITION OF DEBRIS RESULTING FROM ANY AND ALL WORK IN CONNECTION WITH SUBDIVISION CONSTRUCTION.
9. ~~THERE SHALL BE NO ABOVE_GROUND OBSTRUCTION IN ANY PORTION OF THE SIDEWALK EXCEPT WHERE THE WIDTH, EXCLUSIVE OF TOP OF CURB, IS 6 FEET OR GREATER.~~
10. ~~MAIL RECEPTACLES WILL BE NEIGHBORHOOD BOX UNITS INSTALLED PER POST OFFICE REGULATIONS AS SHOWN HEREON. MAILBOX RECEPTACLES SHALL NOT BE LOCATED WITHIN THE RADIUS OF CUL-DE-SAC BULBS AND KNUCKLES. WHERE MAIL RECEPTACLES AND SIDEWALKS ARE LOCATED BEHIND THE CURB, PROVIDE SIDEWALK TRANSITIONS AT ALL MAILBOX LOCATIONS PER DETAILS SHOWN HEREON.~~
11. ~~AT THE EARLIEST OPPORTUNITY OR PRIOR TO FORMING SIDEWALKS, THE CONTRACTOR SHALL CONTACT THE LOCAL POSTAL OFFICE FOR LOCATION APPROVAL AND TYPE OF MAILBOX RECEPTACLES TO BE INSTALLED.~~
12. CONSTRUCT WALK RETURNS AND TRANSITIONS PER DPW STANDARD PLAN 1130-1.
13. WHERE SIDEWALKS ARE ADJACENT TO CURB, CONSTRUCT RESIDENTIAL DRIVEWAYS PER SPPWC STANDARD PLAN 110-2 UNLESS OTHERWISE SHOWN. PRIOR TO FORMING CURB AND GUTTER, THE CONTRACTOR SHALL CONFER WITH THE COUNTY INSPECTOR TO SECURE APPROVAL FOR ALL DRIVEWAY LOCATIONS AND WIDTHS. WHERE SIDEWALKS ARE ADJACENT TO CURB, PROVIDE SIDEWALK TRANSITIONS AT ALL DRIVEWAY LOCATIONS PER DETAIL SHOWN HEREON.
14. ~~CONSTRUCT STREET NAME SIGNS PER LOCATIONS AS SHOWN ON PLAN IN ACCORDANCE WITH CURRENT COUNTY SPECIFICATIONS AND STANDARD PLANS FOR STREET NAME SIGNS. INSTALLATIONS SHALL CONFORM TO "TYPE B" FOR STREETS CLASSIFIED AS RESIDENTIAL AND "TYPE A" FOR STREETS CLASSIFIED AS ANY OTHER CLASSIFICATION ABOVE RESIDENTIAL. ALL STREET NAME SIGNS AT AN INTERSECTION SHALL BE OF THE SAME TYPE AND SHALL HAVE ASTM TYPE IX RETRO-REFLECTIVE SHEETING WITH AN ANTI-GRAFFITI OVERLAY FILM. CONTACT THE LA CO DPW SIGN SHOP AT (626)458-1700 FOR SPECIFICATIONS AND STANDARD PLANS. STREET NAME SIGNS SHALL BE POSTED PRIOR TO OCCUPANCY OF BUILDINGS.~~
15. ~~PROVIDE A STREET LIGHTING SYSTEM APPROVED BY THE STREET LIGHTING SECTION, TRAFFIC AND LIGHTING DIVISION~~; AND ~~PROVIDE FOR THE TEMPORARY OPERATIONS OF THE STREET LIGHTING SYSTEM.~~
16. THICKNESS OF BASE MATERIALS WILL BE DETERMINED BY THE DEPARTMENT OF PUBLIC WORKS CBR SOIL TEST AND ESTABLISHED BY THE MATERIALS LABORATORY. SUBDIVIDER'S ENGINEER SHALL REQUEST TEST BY THE DEPARTMENT OF PUBLIC WORKS, MATERIALS LABORATORY AT (626) 458-4928, AFTER STREETS HAVE BEEN ROUGH GRADED. PLANS MUST BE REVISED TO SHOW ACTUAL BASE TO BE PLACED.
17. CRUSHED MISCELLANEOUS BASE MAY BE USED UNDER CURB AND GUTTER IN LIEU OF CRUSHED AGGREGATE BASE.
18. CRUSHED MISCELLANEOUS BASE OR SELECT MATERIAL WITH EXPANSION OF 3% OR LESS BY THE DEPARTMENT OF PUBLIC WORKS CBR SOIL TEST MAY BE USED IN LIEU OF CRUSHED AGGREGATE BASE UNDER WALKS.
19. ~~DRIVEWAYS SHALL NOT ENCROACH IN THE FOUR (4) FEET GUTTER PORTION OF LOCAL DEPRESSIONS.~~
20. ~~PLANT STREET TREES PER LOS ANGELES COUNTY DEPARTMENT OF PUBLIC WORKS "SPECIAL PROVISIONS FOR TREE PLANTING SUBDIVISION," SPPWC STANDARD PLAN 518-3 THROUGH 524-2 AS REQUIRED, AND PRIOR TO OCCUPANCY OF BUILDINGS. SEE STREET TREE LIST HEREON.~~
21. ALL UTILITY LINES SHALL BE UNDERGROUND PER SECTION 21.24.400 OF TITLE 21 OF THE LOS ANGELES COUNTY CODE. CONTACT CONSTRUCTION DIVISION AT (626) 458-3141 FOR NEW LOCATION OF ANY ABOVE GROUND UTILITY STRUCTURE IN PARKWAY.
22. WHERE GRADES EXCEED 6%, PLACE PARKWAY PROTECTORS ON DOWNSTREAM SIDE OF ALL DRIVEWAYS PER LADPW STANDARD PLAN 1150-1AND AT ALL LOT LINES, UNLESS DRIVEWAYS ARE CONSTRUCTED WITHIN 50 FEET OF LOT LINES. SEE DETAILS HEREON.
23. NO DRIVEWAYS SHOULD BE LOCATED WITHIN 25 FEET UPSTREAM OF A CATCH BASIN WHEN STREET GRADES IS 6% OR GREATER.
24. RIP RAP NOTES:
    - ~~A. ROCKS FOR GROUTED RIP RAP SHALL BE GOOD QUALITY BROKEN CONCRETE AND/OR RIVER RUN ROCK. THE SMALLEST DIMENSION SHALL NOT BE LESS THAN SIX (6) INCHES NOR GREATER THAN 18 INCHES UNLESS OTHERWISE SPECIFIED. THE LARGEST DIMENSION SHALL NOT EXCEED FOUR (4) TIMES THE SMALLEST DIMENSION.~~
    - ~~B. THERE SHALL BE A GROUT BED AT LEAST TWO (2) INCHES BENEATH THE FIRST LAYER OF ROCK. ALL THE VOIDS BETWEEN THE ROCKS SHALL BE FILLED WITH GROUT. MAXIMUM SPACING BETWEEN ROCKS SHALL BE TWO (2) INCHES.~~
    - ~~C. SURFACE ROCKS SHALL BE EMBEDDED FROM 1/2 TO 2/3 OF THEIR MAXIMUM DIMENSION.~~
25. PIPE BEDDING SHALL BE: IN ACCORDANCE WITH LOS ANGELES COUNTY ENGINEER CASE A BEDDING PER DPW STANDARD PLAN 3092-1 UNLESS OTHERWISE NOTED. THE BEDDING MATERIAL PLACED FROM THE BOTTOM OF THE PIPE TO 1 FOOT OVER THE TOP OF THE PIPE SHALL BE SAND, CRUSHED AGGREGATE, OR NATIVE FREE_DRAINING GRANULAR MATERIAL AND SHALL HAVE A SAND EQUIVALENT OF 20 OR GREATER.OR ACCORDING TO DPW STANDARD PLAN 3080-1, CASE 3, EXCEPT BELL AND SPIGOT PIPE WHICH SHALL BE CASE 2 BEDDING, UNLESS OTHERWISE SHOWN. "W" VALUES SHALL BE AS SPECIFIED ON DPW STANDARD PLAN 3080-1 FOR CASE 3 BEDDING, NOTES (A), (B), AND (C). IF THE "W" VALUE AT THE TIP OF THE PIPE IS EXCEEDED, THEBEDDING SHALL BE MODIFIED, AND/OR PIPE OF ADDITIONAL STRENGTH SHALL BE PROVIDED. THE PROPOSED MODIFICATION SHALL BE APPROVED BY THE DEPARTMENT.
26. ALL CONSTRUCTION JOINTS FOR P.C.C. CURBS, GUTTERS, DRIVEWAYS AND SIDEWALKS SHALL BE IN ACCORDANCE WITH SPPWC STANDARD PLAN NO. 112-2.
27. THE LATEST REVISED STANDARD PLAN OR DRAWING SHALL BE USED UNLESS OTHERWISE SPECIFICALLY NOTED.
28. REPAIR ANY BROKEN OR DAMAGED CURB, GUTTER, SIDEWALK, AND PAVEMENT ON STREETS WITHIN OR ABUTTING THE SUBDIVISION.
29. A SIGNING AND STRIPING PLAN IS REQUIRED. THE APPLICANT SHALL SUBMIT SIGNING AND STRIPING PLANS FOR APPROVAL TO LAND DEVELOPMENT DIVISION (IF NOT ALREADY APPROVED) AND SHALL CONFORM WITH THE APPROVED SIGNING AND STRIPING PLAN PRIOR TO THE ACCEPTANCE OF THE STREETS FOR PUBLIC MAINTENANCE. AFTER OBTAINING THE CONSTRUCTION PERMIT, THE APPLICANT SHALL CONTACT OPERATIONAL SERVICES DIVISION AT (626) 458-1700 TO REQUEST THE FABRICATION AND INSTALLATION OF REQUIRED SIGNAGE AND THE COMPLETION OF STRIPING PER APPROVED PLANS. THE APPLICANT SHALL DEPOSIT APPROPRIATE FEES WITH CONSTRUCTIONDIVISION WHEN APPLYING FOR THE PERMIT TO ALLOW COMPLETION OF THE NECESSARY WORK.
30. A TRAFFIC CONTROL PLAN MAY BE REQUIRED FOR WORK WITHIN PUBLIC RIGHT OF WAY. PRIOR TO SECURING A CONSTRUCTION OR EXCAVATION PERMIT, THE APPLICANT/CONTRACTOR SHOULD CONTACT CONSTRUCTION DIVISION AT (626) 458-3129 AT THE EARLIEST POSSIBLE OPPORTUNITY TO DETERMINE IF SUCH A PLAN IS REQUIRED BASED ON THE PROPOSED SCOPE OF WORK. IF A TRAFFIC CONTROL PLAN IS DETERMINED TO BE NECESSARY, THE APPLICANT/CONTRACTOR SHALL SUBMIT PLANS TO CONSTRUCTION DIVISION FOR APPROVAL.
31. ALL EXISTING SIGNS AND POSTS LOCATED WITHIN THE PUBLIC RIGHT OF WAY THAT INTERFERE WITH PROPOSED WORK SHALL BE REMOVED PRIOR TO WORK COMMENCING AND REPLACED IN KIND ONCE WORK HAS BEEN COMPLETED. PLEASE CALL COUNTY OF LOS ANGELES DEPARTMENTALL EXISTING SIGNS AND POSTS LOCATED WITHIN THE PUBLIC RIGHT OF WAY THAT INTERFERE WITH PROPOSED WORK SHALL BE REMOVED PRIOR TO WORK COMMENCING AND REPLACED IN KIND ONCE WORK HAS BEEN COMPLETED. PLEASE CALL COUNTY OF LOS ANGELES DEPARTMENT OF PUBLIC WORKS OPERATIONAL SERVICES DIVISION AT (626) 458-1708 5 DAYS PRIOR TO COORDINATE.

STORMWATER POLLUTION NOTES

1. EVERY EFFORT SHOULD BE MADE TO ELIMINATE THE DISCHARGE OF NON-STORM WATER FROM THE PROJECT AT ALL TIMES.
2. ERODED SEDIMENTS AND OTHER POLLUTANTS MUST BE RETAINED ON SITE AND MAY NOT BE TRANSPORTED FROM THE SITE VIA SHEET FLOW, SWALES, AREA DRAINS, NATURAL DRAINAGE COURSES, OR WIND.
3. STOCKPILES OF EARTH AND OTHER CONSTRUCTION RELATED MATERIALS MUST BE PROTECTED FROM BEING TRANSPORTED FROM THE SITE BY THE FORCES OF WIND OR WATER.
4. FUELS, OILS, SOLVENTS AND OTHER TOXIC MATERIALS MUST BE STORED IN ACCORDANCE WITH THEIR LISTING AND ARE NOT TO CONTAMINATE THE SOIL AND SURFACE WATERS. ALL APPROVED STORAGE CONTAINERS ARE TO BE PROTECTED FROM THE WEATHER. SPILLS MUST BE CLEANED UP IMMEDIATELY AND DISPOSED OF IN A PROPER MANNER. SPILLS MAY NOT BE WASHED INTO THE DRAINAGE SYSTEM.
5. EXCESS OR WASTE CONCRETE MAY NOT BE WASHED INTO THE PUBLIC WAY OR ANY OTHER DRAINAGE SYSTEM. PROVISIONS SHALL BE MADE TO RETAIN CONCRETE WASTES ON SITE UNTIL THEY CAN BE DISPOSED OF AS SOLID WASTE.
6. TRASH AND CONSTRUCTION-RELATED SOLID WASTES MUST BE DEPOSITED INTO A COVERED RECEPTACLE TO PREVENT CONTAMINATION OF RAINWATER AND DISPERSAL BY WIND.
7. SEDIMENTS AND OTHER MATERIALS MAY NOT BE TRACKED FROM THE SITE BY VEHICLE TRAFFIC. THE CONSTRUCTION ENTRANCE ROADWAYS MUST BE STABILIZED SO AS TO INHIBIT SEDIMENTS FROM BEING DEPOSITED INTO THE PUBLIC WAY. ACCIDENTAL DEPOSITIONS MUST BE SWEPT UP IMMEDIATELY AND MAY NOT BE WASHED DOWN BY RAIN OR OTHER MEANS.
8. ANY SLOPES WITH DISTURBED SOILS OR DENUDED OF VEGETATION MUST BE STABILIZED SO AS TO INHIBIT EROSION BY WIND AND WATER.

VICINITY MAP

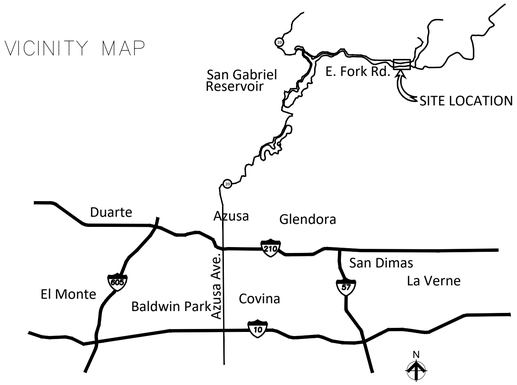

VICINITY MAP
NTS

LOCATION MAP

DIAL BEFORE YOU DIG
DIAL 8-1-1 FROM ANY PHONE OR
VIA WEB AT: http://www.digalert.org/digexpress.asp
DIGALERT
PLAY IT SAFE. DIAL BEFORE YOU DIG!
AT LEAST TWO WORKING DAYS PRIOR TO EXCAVATING
SERVING NINE SOUTHERN CALIFORNIA COUNTIES

REVISIONS	DATE
1 BID ALTERNATES	05/16/2026
2 PLAN REVISIONS	05/16/2026
3 CXT RESTROOM	05/16/2026

WATERSHED CONSERVATION AUTHORITY
100 N OLD SAN GABRIEL CANYON ROAD
AZUSA, CA 91702
PHONE: (626) 815-1019

Lynne Dwyer Landscape Architect
2616 NORTH FIGUEROA, SUITE A
LOS ANGELES, CA 90065
(323) 221-9500

SHEET TITLE
STREET IMPROVEMENTS NOTES AND BMPs

PROJECT TITLE
OAKS STAIRWAY & OVERLOOK
EAST FORK, SAN GABRIEL RIVER

LICENSED LANDSCAPE ARCHITECT
LYNNE DWYER
5/31/2027
Renewal Date
Date
LICENSE NO. 3867
STATE OF CALIFORNIA

DRAWN BY:	SH
CHECKED BY:	LD
PROJECT NO.	OS2019
DATE:	JUNE 1 2026

L-6.00

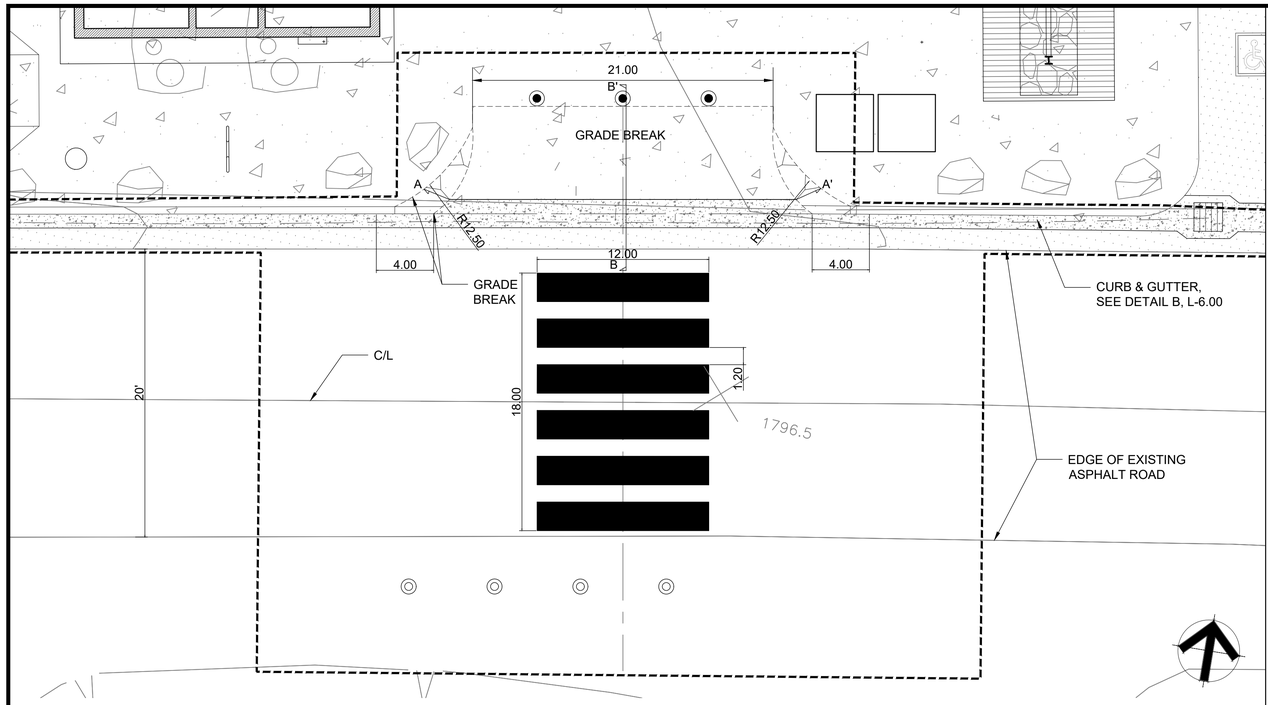

A CURB/ENTRY RAMP & CROSSWALK
Scale: 1" = 5'

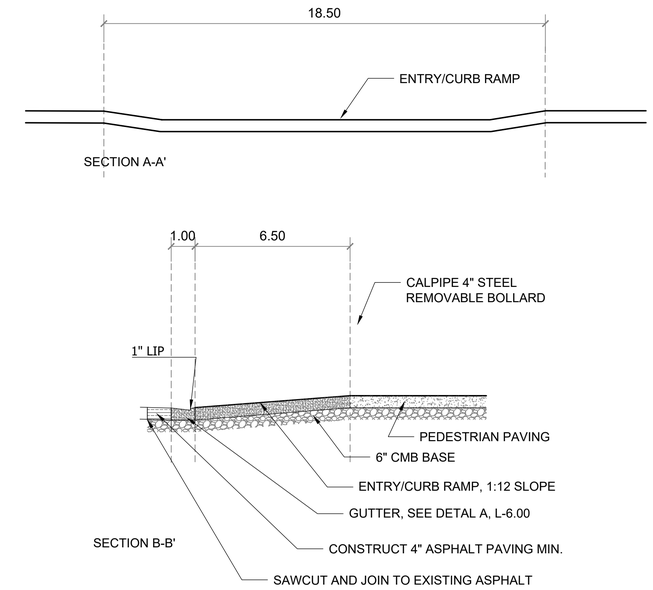

B ENTRY/CURB RAMP SECTIONS
Scale: 1" = 3'

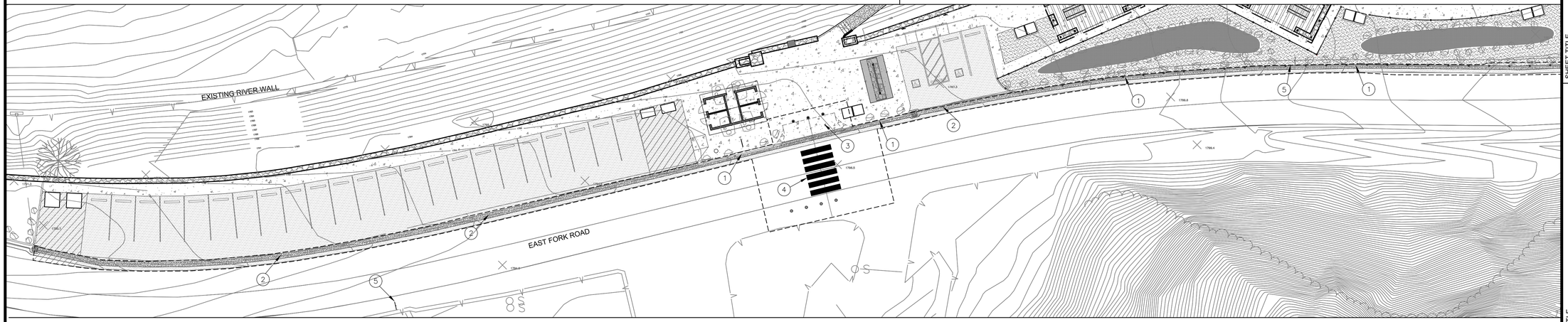

CONSTRUCTION LEGEND

1. CURB AND GUTTER, SEE DETAIL B, L-6.00
2. CONCRETE GUTTER, SEE DETAIL A, L-6.00
3. CURB RAMP, SEE DETAIL A, L-6.01
4. CROSSWALK, SEE DETAIL A, L-6.01
5. PEDESTRIAN WARNING SIGN
6. CURB RAMP, SEE DETAIL A, L-6.02
7. PARALLEL PARKING SPACE, 9'X20', ASPHALT WITH CHIPSEAL SURFACE
8. REMOVABLE STEEL BOLLARD. SEE DETAIL D, L-2.54
9. FIXED STEEL BOLLARD.

LEGEND

------- STREET IMPROVEMENTS AREA

SCALE: 1" = 20'
0 10 20 40

DIAL BEFORE YOU DIG
DIAL 8-1-1 FROM ANY PHONE OR
VIA WEB AT: http://www.digalert.org/digexpress.asp
DIGALERT
PLAY IT SAFE. DIAL BEFORE YOU DIG!
AT LEAST TWO WORKING DAYS PRIOR TO EXCAVATING
SERVING NINE SOUTHERN CALIFORNIA COUNTIES

REVISIONS	DATE
1 BID ALTERNATES	05/16/2026
2 PLAN REVISIONS	05/16/2026
3 CXT RESTROOM	05/16/2026

WATERSHED CONSERVATION AUTHORITY
100 N OLD SAN GABRIEL CANYON ROAD
AZUSA, CA 91702
PHONE: (626) 815-1019

Lynne Dwyer
Landscape Architect
2616 NORTH FIGUEROA, SUITE A
LOS ANGELES, CA 90065
(323) 221-9500

SHEET TITLE
EAST FORK ROAD

PROJECT TITLE
OAKS STAIRWAY & OVERLOOK
EAST FORK, SAN GABRIEL RIVER

LICENSED LANDSCAPE ARCHITECT
LYNNE DWYER
Signature
5/31/2027
Renewal Date
Date
LICENSE NO. 3607
STATE OF CALIFORNIA

DRAWN BY:	SH
CHECKED BY:	LD
PROJECT NO.	OS2019
DATE:	JUNE 1 2026

L-6.01

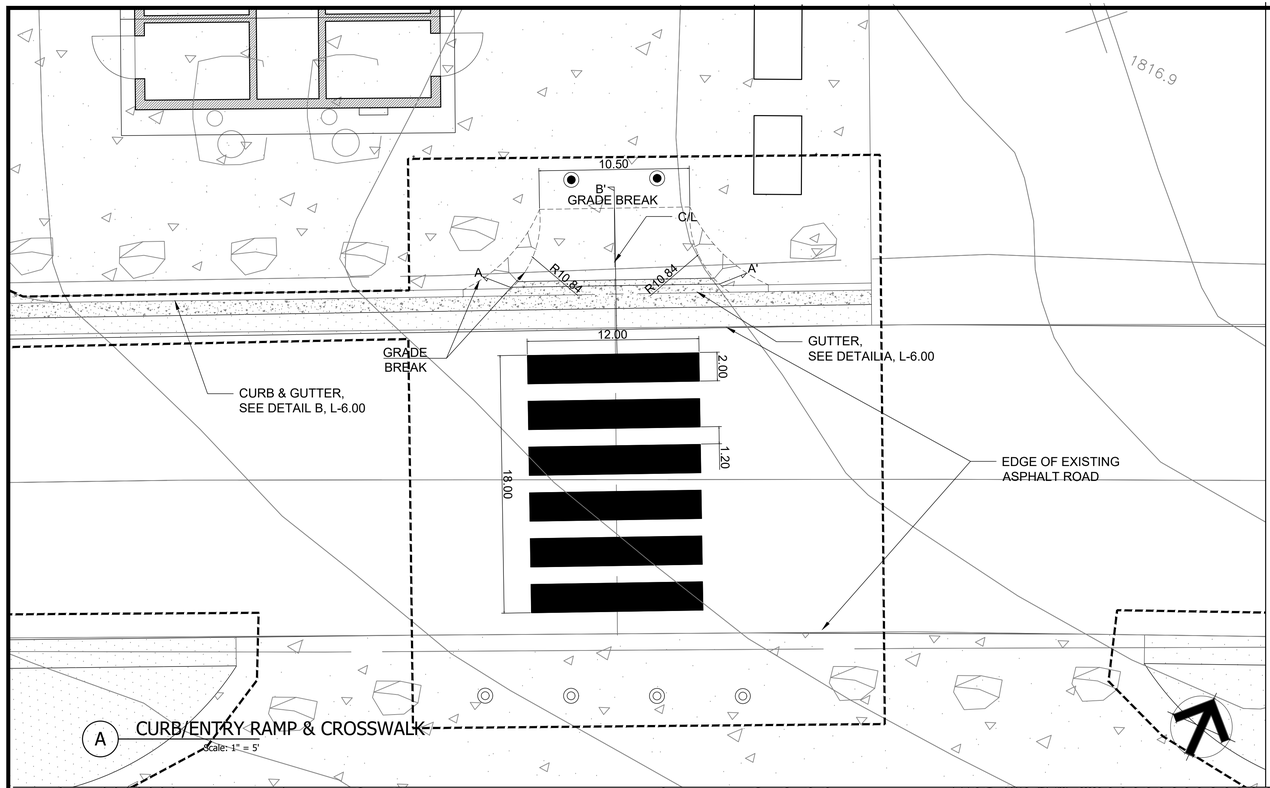

A CURB/ENTRY RAMP & CROSSWALK
Scale: 1" = 5'

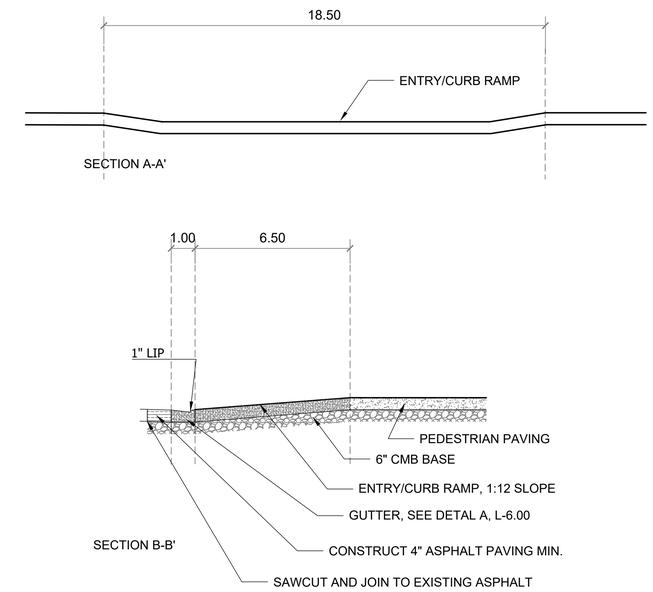

B ENTRY/CURB RAMP SECTIONS
Scale: 1" = 3'

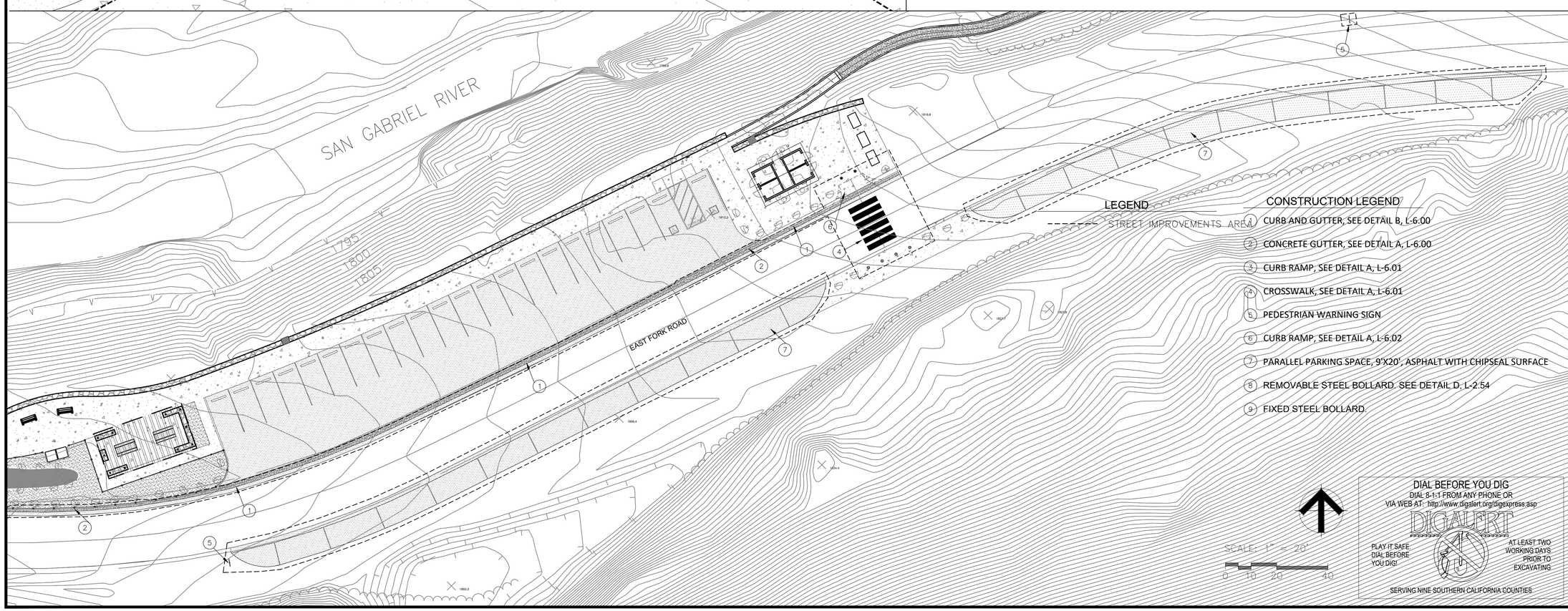

REVISIONS	DATE
1 BID ALTERNATES	05/16/2026
2 PLAN REVISIONS	05/16/2026
3 CXT RESTROOM	05/16/2026

WATERSHED CONSERVATION AUTHORITY
100 N OLD SAN GABRIEL CANYON ROAD
AZUSA, CA 91702
PHONE: (626) 815-1019

Lynne Dwyer
Landscape Architect
2616 NORTH FIGUEROA, SUITE A
LOS ANGELES, CA 90065
(323) 221-9500

SHEET TITLE
EAST FORK ROAD

PROJECT TITLE
OAKS STAIRWAY & OVERLOOK
EAST FORK, SAN GABRIEL RIVER

LICENSED LANDSCAPE ARCHITECT
LYNNE DWYER
5/31/2027
Renewal Date
Date
LICENSE NO. 3607
STATE OF CALIFORNIA

DRAWN BY:	SH
CHECKED BY:	LD
PROJECT NO.	OS2019
DATE:	JUNE 1 2026

L-6.02

GENERAL NOTES

1. ALL WORK SHALL CONFORM TO THE PROJECT SPECIFICATIONS. WORK NOT COVERED BY THE PROJECT SPECIFICATIONS SHALL CONFORM TO THE LATEST EDITION AND SUPPLEMENTS OF THE CALIFORNIA BUILDING CODE AND THE STANDARD SPECIFICATIONS FOR PUBLIC WORKS CONSTRUCTION (2012 GREEN BOOK) AND CITY OF LOS ANGELES.
2. DUST SHALL BE CONTROLLED BY WATERING AND/OR DUST PALLIATIVE.
3. SANITARY FACILITIES SHALL BE MAINTAINED ON THE SITE DURING THE CONSTRUCTION PERIOD.
4. WORK HOURS ARE LIMITED FROM 7:30 AM TO 7:00 PM MONDAY THROUGH FRIDAY.
5. THE GRADING PLAN WHEN APPROVED SHALL BE ON THE JOB SITE AT ALL TIMES.
6. CONTRACTOR IS RESPONSIBLE FOR LOCATING AND PROTECTING UTILITIES.
7. APPROVED DRAINAGE PROVISIONS AND PROTECTIVE MEASURES MUST BE USED TO PROTECT RIVER.
8. POSITIVE DRAINAGE SHALL BE MAINTAINED AWAY FROM ALL BUILDING AND SLOPE AREAS.
9. NO PAINT, PLASTER, CEMENT, SOIL, MORTAR OR OTHER RESIDUE SHALL BE ALLOWED TO ENTER STREET OR RIVER. ALL MATERIAL AND WASTE SHALL BE REMOVED FROM THE SITE.
10. CONSTRUCTION SITE MUST BE FENCED AND SECURE AT ALL TIMES AND SHALL BE THE SOLE RESPONSIBILITY OF THE CONTRACTOR.
11. ANY CONTAMINATED SOIL ENCOUNTERED SHALL BE BROUGHT TO THE ATTENTION OF THE PROJECT MANAGER IMMEDIATELY.

NOTICE TO CONTRACTOR(S)

1. SPECIFICATIONS: ALL WORK SHALL CONFORM TO THE PROJECT SPECIFICATIONS. WORK NOT COVERED BY THE PROJECT SPECIFICATIONS SHALL CONFORM TO THE LATEST EDITION AND SUPPLEMENTS OF CALIFORNIA BUILDING CODE.
2. UNDERGROUND SERVICE ALERT: BEFORE COMMENCING ANY EXCAVATION, THE CONTRACTOR SHALL OBTAIN AN UNDERGROUND SERVICE ALERT (USA) INQUIRY I.D. NUMBER BY CALLING 8-1-1. TWO WORKING DAYS SHALL BE ALLOWED AFTER THE I.D. NUMBER IS OBTAINED AND BEFORE THE CONTRACTOR STARTS THE EXCAVATION WORK SO THAT UTILITY OWNERS CAN BE NOTIFIED.
3. CONTRACTOR SHALL BE RESPONSIBLE FOR ANY DAMAGE TO FACILITIES.
4. PLANS ARE NOT TO BE UTILIZED UNLESS STAMPED "APPROVED" BY THE ENGINEER OF RECORD.
5. CONTRACTOR SHALL PROVIDE TIMELY NOTIFICATION TO THE ENGINEER OF RECORD OF ANY POTENTIAL OR ACTUAL DISCREPANCIES BETWEEN CIVIL PLANS AND OTHER PLANS/ACTUAL FIELD CONDITIONS.
6. CONTRACTOR SHALL MAINTAIN A COMPLETE SET OF PLANS IN THE FIELD. PLANS SHALL BE MARKED UP TO REFLECT ACTUAL OR AS-BUILT CONDITIONS. PLANS SHALL BE KEPT CURRENT. CONTRACTOR SHALL ALSO MAINTAIN ALL NECESSARY STANDARD PLANS AND SPECIFICATIONS IN THE FIELD.
7. QUANTITIES PROVIDED HEREIN ARE ENGINEER'S ESTIMATES FOR PERMITTING OR BONDING PURPOSES ONLY AND ARE NOT TO BE USED FOR BIDDING. CONTRACTOR SHALL PERFORM ITS OWN CONSTRUCTION TAKEOFFS.
8. NOT ALL UTILITIES MAY BE SHOWN, CONTRACTOR SHALL FIELD VERIFY ELEVATIONS AND LOCATIONS OF ALL AFFECTED UTILITIES. PROTECT IN PLACE, RELOCATE, OR REPLACE AS NECESSARY. PROVIDE TEMPORARY UTILITY SERVICES AS NECESSARY.
9. ELEVATIONS INDICATED MAY HAVE BEEN INTERPOLATED FROM EXISTING TOPOGRAPHIC OR RECORD MAPS, CONTRACTOR SHALL FIELD VERIFY ELEVATIONS AND LOCATIONS WHERE PROPOSED IMPROVEMENTS JOIN EXISTING.
10. ROUGH GRADE, FINISH GRADE, AND AS-BUILT CERTIFICATIONS MAY BE NECESSARY. CERTIFICATION SHALL BE PERFORMED BY THE CONTRACTOR'S ENGINEER AND PROVIDED TO THE ENGINEER OF RECORD IF PER WCA/ANF REQUIREMENTS.
11. APPROVAL OF THESE PLANS BY THE WCA/ANF DOES NOT CONSTITUTE A REPRESENTATION AS TO THE ACCURACY OR COMPLETENESS OF THE LOCATION OR THE EXISTENCE OR NON-EXISTENCE OF ANY UTILITY AND/OR STRUCTURE WITHIN THE LIMITS OF THIS PROJECT. THE CONTRACTOR IS REQUIRED TO TAKE ALL DUE PRECAUTIONARY MEANS TO PROTECT THE UTILITIES OF RECORD OR NOT OF RECORD OR NOT SHOWN ON THESE PLANS.
12. THE GRADING CONTRACTOR SHALL VERIFY THE PRECISE GRADING QUANTITY AS SHOWN ON THIS PLAN AS PART OF HIS BID.
13. CONTRACTOR SHALL BE RESPONSIBLE FOR OBTAINING ALL REQUIRED PERMITS PRIOR TO COMMENCEMENT OF GRADING OPERATIONS.

UNAUTHORIZED CHANGES AND USES: THE ENGINEER PREPARING THESE PLANS WILL NOT BE RESPONSIBLE FOR, OR LIABLE FOR, UNAUTHORIZED CHANGES TO OR USES OF THESE PLANS. ALL CHANGES TO THE PLANS MUST BE IN WRITING AND MUST BE APPROVED BY THE PREPARER OF THESE PLANS AND THE WCA/ANF.

ADVANCE CONSTRUCTION NOTICE SIGNS:

14. THE CONTRACTOR SHALL VERIFY ALL DIMENSION AND CONDITIONS IN THE FIELD PRIOR TO STARTING ANY WORK.
15. THE ENGINEER DOES NOT WARRANT THE ACCURACY OF SCALED DIMENSION ON ANY PLAN. ALL DIMENSIONS SHALL BE AS DESIGNATED ON THE PLAN.
17. THE CONTRACTOR SHALL PROTECT ALL PUBLIC AND PRIVATE PROPERTY DURING THE PERFORMANCE OF WORK DONE UNDER THIS CONTRACT. THE CONTRACTOR SHALL TAKE THE NECESSARY PRECAUTION TO AVOID ANY DAMAGE TO ANY STRUCTURES OR FEATURES ADJACENT TO THE CONSTRUCTION LIMITS, THE CONTRACTOR SHALL ALSO PROVIDE FOR THE PROTECTION OF THE PEDESTRIANS.
18. THE CONTRACTOR SHALL OBTAIN NECESSARY PERMITS PRIOR TO COMMENCING ANY GRADING OR EXCAVATIONS.
19. SELECTIVE REMOVALS:

    19.A. REMOVE EXISTING IMPROVEMENTS THAT INTERFERE WITH THE CONSTRUCTION OF THIS PROJECT, AND NO MORE THAN IS INDICATED IN THE DEMOLITION PLAN.

    19.B. ALL REMOVALS OR RELOCATIONS OF EXISTING UTILITIES SHALL BE COORDINATED WITH THE OWNER OF SAID UTILITY. NO REMOVALS OR RELOCATIONS OF EXISTING UTILITIES SHALL COMMENCE PRIOR TO APPROVAL OF SAID UTILITY.

20. REPAIR AND/OR REPLACE ANY EXISTING BROKEN OR OFF-GRADE PAVEMENT, CONCRETE CURB, GUTTER OR SIDEWALK IMMEDIATELY ADJACENT TO OR WITHIN THE AREA OF THIS IMPROVEMENT SATISFACTORY TO THE ANF.
21. SURVEY MONUMENT PRESERVATION IS REQUIRED AND SHALL INCLUDE SUBMITTAL OF PRE AND POST CONSTRUCTION SURVEY MONUMENT TIES TO THE ENGINEER.

STORM DRAIN CONSTRUCTION NOTES:

22. NO CONSTRUCTION DEBRIS WILL BE ALLOWED TO FALL IN TO THE CATCH BASIN OR STORMDRAIN, IF ANY MATERIAL IS INADVERTENTLY INTRODUCED, THEN IT WILL BE REMOVED IMMEDIATELY.
23. TRENCH BACKFILL FOR ALL STORM DRAINS CONSTRUCTED IN DRAINAGE EASEMENTS SHALL BE MECHANICALLY COMPACTED TO A RELATIVE DENSITY OF 90%.

LAY DOWN AREA:

24. THE CONTRACTOR SHALL BE RESPONSIBLE TO SECURE AND PAY FOR ALL NECESSARY CONSTRUCTION LAYDOWN AREAS.
25. THE CONTRACTOR SHALL ASSUME ALL RESPONSIBILITIES OF RENTING OPERATING EQUIPMENTS.
26. ALL REPAIRS TO CONSTRUCTION LAYDOWN AREAS AND TEMPORARY IMPROVEMENTS SHALL BE INSPECTED AND APPROVED BY THE INSPECTOR AND/OR AN AUTHORIZED REPRESENTATIVE OF THE PROPERTY OWNER PER REQUEST.
27. THE CONTRACTOR SHALL REMOVE, REGRADE AND, WHEN NECESSARY, BACKFILL TO RESTORE THE CONSTRUCTION LAY DOWN ACCESS AND TEMPORARY IMPROVEMENTS TO ITS ORIGINAL/FORMER CONDITION AT THE COMPLETION OF THE WORK.
28. THE CONTRACTOR SHALL BACKFILL EXCAVATED AREAS WITH ENGINEERED FILL UP TO THE ORIGINAL GRADE, UNLESS OTHERWISE SPECIFIED OR INDICATED ON THESE PLANS. BACKFILL PIPE TRENCH ACCESSES ONLY AFTER PIPING HAS BEEN INSPECTED.

ESTIMATED EARTHWORK QUANTITIES

1. ESTIMATED EARTH WORK QUANTITIES:

   1.A. CUT: XXX C.Y.
   1.B. FILL: XXX C.Y.
   1.C. EXPORT: XXX C.Y.

2. IT IS THE GRADING CONTRACTOR'S RESPONSIBILITY TO REVIEW THE GRADING PLANS AND SOILS REPORT THOROUGHLY PRIOR TO SITE MOBILIZATION. IT IS ALSO THE GRADING CONTRACTOR'S RESPONSIBILITY TO NOTIFY THE CIVIL AND SOILS ENGINEERS IF ONSITE DISCREPANCIES ARE OBSERVED THAT WOULD AFFECT THE EARTHWORK QUANTITIES.
3. THE EXISTING TOPOGRAPHY AS DELINEATED ON THESE DRAWINGS SHALL BE UTILIZED AS THE BASIS FOR ALL EARTHWORK COMPUTATIONS. SAID TOPOGRAPHY SHALL BE PRESUMED TO BE ACCEPTABLE TO ALL INTERESTED PARTIES UNLESS A DEVIATION IS FOUND PRIOR TO THE START OF GRADING ANY SPECIFIC AREAS. ANY DEVIATION SO DETERMINED SHALL BE PROMPTLY TRANSMITTED TO ALL INTERESTED PARTIES.
4. THE CONTRACTOR IS REQUIRED TO ESTIMATE THE QUANTITIES OF GRADING WORK TO BE DONE AND INCLUDE ALL COSTS THEREFROM IN HIS BID, AS NO ADDITIONAL ALLOWANCE WILL BE MADE WITHOUT PRIOR CONSENT FROM THE OWNER.
5. OVER-EXCAVATION AND/OR EXCESS BACKFILLING OR DUPLICATION OF GRADING ACTIVITIES IS NOT A BASIS FOR ADDITIONAL COMPENSATION. THIS ALSO APPLIES WHERE MATERIAL IS TO BE REMOVED AND REPLACED TO REDUCE MOISTURE CONTENT.
6. OFF-SITE DISPOSAL OF EXCAVATION MATERIAL IS THE RESPONSIBILITY OF THE CONTRACTOR AND SHALL BE INCLUDED IN HIS BID. THE CONTRACTOR SHALL HOLD THE OWNER AND ENGINEER HARMLESS AS A RESULT OF ANY CLAIMS ARISING FROM ACTIONS ENROUTE OR AWAY FROM THE SITE. EXCAVATION MATERIALS SHALL BE DISPOSED OF AT A LEGAL LANDFILL WITH A HAUL PERMIT. NO SOIL OR DEBRIS SHALL BE DISPOSED OF ON GOVERNMENT PROPERTY WITHOUT THE PERMISSION OF THE ANGELES NATIONAL FOREST.
7. EARTH VOLUMES SHOWN HEREIN ARE ESTIMATES BASED UPON THE GEOTECHNICAL ANALYSIS PERFORMED BY THE NAMED SOILS ENGINEER AND TOPOGRAPHIC SURVEY OF THE EXISTING GROUND SURFACE AT THE TIME OF PLAN PREPARATION. EARTHWORK VOLUMES ARE COMPUTED BY METHODS COMMONLY USED IN STANDARD ENGINEERING PRACTICE, AND ARE INTENDED FOR USE IN ESTABLISHING GOVERNING AGENCY FEES. ACTUAL FIELD CONDITIONS MAY VARY FROM OBSERVED OR MEASURED CONDITIONS AT THE TIME OF PLAN PREPARATION. EARTHWORK QUANTITIES MAY VARY AS A RESULT.
8. THE QUANTITIES FOR THESE PLANS ARE BASED UPON 0% SHRINKAGE AND 0% SUBSIDENCE. ACTUAL SHRINKAGE VOLUME MAY VARY CONSIDERABLY.

GRADING NOTES

GENERAL NOTES

1. ALL GRADING AND CONSTRUCTION SHALL CONFORM TO LATEST EDITION OF THE CALIFORNIA BUILDING CODE UNLESS SPECIFICALLY NOTED ON THESE PLANS.
2. ANY MODIFICATIONS OF OR CHANGES TO APPROVED GRADING PLANS MUST BE APPROVED BY THE CIVIL ENGINEER.
3. THE CONTRACTOR SHALL SUBMIT AN INSURANCE CERTIFICATE INDEMNIFYING AND NAMING THE COUNTY OF LOS ANGELES AS AN ADDITIONAL INSURED FOR ALL WORK IN THE PUBLIC RIGHT OF WAY.
4. CALIFORNIA PUBLIC RESOURCES CODE (SECTION 5097.98) AND HEALTH AND SAFETY CODE (SECTION 7050.5) ADDRESS THE DISCOVERY AND DISPOSITION OF HUMAN REMAINS. IN THE EVENT OF DISCOVERY OR RECOGNITION OF ANY HUMAN REMAINS IN ANY LOCATION OTHER THAN A DEDICATED CEMETERY, THE LAW REQUIRES THAT GRADING IMMEDIATELY STOPS AND NO FURTHER EXCAVATION OR DISTURBANCE OF THE SITE, OR ANY NEARBY AREA WHERE HUMAN REMAINS MAY BE LOCATED, OCCUR UNTIL THE FOLLOWING HAS MEASURES HAVE BEEN TAKEN:

   4.A. THE COUNTY CORONER HAS BEEN INFORMED AND HAS DETERMINED THAT NO INVESTIGATION OF THE CAUSE OF DEATH IS REQUIRED, AND

   4.B. IF THE REMAINS ARE OF NATIVE AMERICAN ORIGIN, THE DESCENDANTS FROM THE DECEASED NATIVE AMERICANS HAVE MADE A RECOMMENDATION FOR THE MEANS OF TREATING OR DISPOSING, WITH APPROPRIATE DIGNITY, OF THE HUMAN REMAINS AND ANY ASSOCIATED GRAVE GOODS.

5. THE LOCATION AND PROTECTION OF ALL UTILITIES IS THE RESPONSIBILITY OF THE PERMITTEE.
6. SLOPES SHALL BE A MAXIMUM 3:1, UNLESS OTHERWISE APPROVED AND CERTIFIED BY THE GEOTECHNICAL ENGINEER.
7. ALL GRADES BETWEEN CONTOURS AND/OR SPOT ELEVATIONS SHALL BE ASSUMED TO BE STRAIGHT GRADES. THERE SHALL BE NO LOCALIZED DEPRESSIONS OR HUMPS.
8. TRENCHES AND SLOPES WITH A VERTICAL HEIGHT GREATER THAN 4 FT SHALL BE PROPERLY PROTECTED PER OCCUPATIONAL SAFETY AND HEALTH ADMINISTRATION (OSHA) STANDARDS.
9. ALL EXPORT MATERIAL FROM THE SITE SHALL BE HAULED TO A LEGAL LANDFILL. A COPY OF THE LANDFILL RECEIPT SHALL BE PROVIDED TO THE INSPECTOR UPON REQUEST.
10. A COPY OF THE GRADING PERMIT AND APPROVED GRADING PLANS SHALL BE AVAILABLE AT THE SITE AT ALL TIMES.
11. PRIOR TO GRADING, SITE BOUNDARIES, EASEMENTS, DRAINAGE DEVICES, AND RESTRICTED USE AREAS SHALL BE LOCATED PER CONSTRUCTION STAKING BY THE CIVIL ENGINEER OR LICENSED SURVEYOR.
12. AN EROSION CONTROL PLAN, TO BE REVIEWED AND APPROVED BY THE ANF, IS REQUIRED FOR ALL GRADING PERMITS.
13. TRANSFER OF RESPONSIBILITY: IF THE CIVIL ENGINEER, THE GEOTECHNICAL ENGINEER, OR THE ENGINEERING GEOLOGIST OF RECORD IS CHANGED DURING GRADING, ALL GRADING ACTIVITIES SHALL STOP UNTIL THE REPLACEMENT AGREES IN WRITING TO ACCEPT RESPONSIBILITY WITHIN THE AREA OF TECHNICAL COMPETENCE FOR APPROVAL UPON COMPLETION OF WORK. THE PERMITTEE SHALL BE RESPONSIBLE TO NOTIFY THE CITY ENGINEER IN WRITING OF SUCH CHANGE PRIOR TO RECOMMENCING ANY GRADING.

INSPECTION NOTES

1. THE PERMITTEE OR HIS AGENT SHALL NOTIFY THE WCA/ANF AT LEAST TWO WORKING DAYS IN ADVANCE OF REQUIRED INSPECTIONS AT THE FOLLOWING STAGES OF WORK.
2. 18A. PRE-GRADE - BEFORE THE START OF ANY EARTH DISTURBING ACTIVITY OR CONSTRUCTION.
3. 18B. INITIAL - WHEN THE SITE HAS BEEN CLEARED OF VEGETATION AND UNAPPROVED FILL HAS BEEN MITIGATED PER THE APPROVED GEOTECHNICAL REPORT. FILL SHALL NOT BE PLACED PRIOR TO THIS INSPECTION. PRIOR TO ANY CONSTRUCTION ACTIVITIES, INCLUDING GRADING, ALL STORM WATER POLLUTION PREVENTION MEASURES SHALL BE INSTALLED.
4. 18C. ROUGH - WHEN APPROXIMATE FINAL ELEVATIONS HAVE BEEN ESTABLISHED; DRAINAGE TERRACES, SWALES AND BERMS HAVE BEEN INSTALLED AT THE TOP OF THE SLOPE; AND ROUGH GRADING HAS BEEN CERTIFIED BY THE CIVIL ENGINEER AND THE GEOTECHNICAL ENGINEER.
5. 18D. FINAL - WHEN GRADING HAS BEEN COMPLETED; ALL DRAINAGE DEVICES INSTALLED; SLOPE PLANTING ESTABLISHED, IRRIGATION SYSTEMS INSTALLED; AS-BUILT PLANS SUBMITTED AND APPROVED; AND FINAL GRADING HAS BEEN CERTIFIED BY THE CIVIL ENGINEER AND GEOTECHNICAL ENGINEER.
6. ALL GRADED SITES MUST HAVE DRAINAGE SWALES, BERMS, AND OTHER DRAINAGE DEVICES INSTALLED PRIOR TO ROUGH GRADING APPROVAL.
7. THE CIVIL ENGINEER AND GEOTECHNICAL ENGINEER SHALL CERTIFY THE ROUGH GRADING AND FINAL GRADING PRIOR TO EACH RESPECTIVE INSPECTION.
8. FINAL GRADING MUST BE APPROVED BEFORE OCCUPANCY OF BUILDING WILL BE ALLOWED.

DRAINAGE NOTES

9. DRAINAGE ACROSS PROPERTY LINES SHALL NOT EXCEED THAT WHICH EXISTED PRIOR TO GRADING OR CONSTRUCTION. EXCESS OR CONCENTRATED DRAINAGE SHALL BE CONTAINED ON SITE OR DIRECTED TO AN APPROVED DRAINAGE FACILITY.
10. ROOF DRAINAGE MUST BE DIVERTED FROM GRADED SLOPES.
11. PROVISIONS SHALL BE MADE FOR CONTRIBUTORY DRAINAGE AT ALL TIMES.
12. A 2 PERCENT MINIMUM DRAINAGE SLOPE AWAY FROM PROPOSED STRUCTURES AND PROPERTY LINES SHALL BE PROVIDED.
13. DRAINAGE SWALES SHALL HAVE A 1 PERCENT MINIMUM DRAINAGE SLOPE.

GEOTECHNICAL NOTES

ALL WORK SHALL COMPLY WITH THE RECOMMENDATIONS INCLUDED IN THE GEOTECHNICAL ENGINEER'S REPORTS AND THE APPROVED GRADING PLANS AND SPECIFICATIONS.

GEOTECHNICAL ENGINEER: XXX
14. FILE NO.: _____
    DATE OF REPORT(S): XXX
    ADDENDA: _____

15. THE GEOTECHNICAL ENGINEER SHALL PROVIDE SUFFICIENT INSPECTIONS DURING THE PREPARATION OF THE NATURAL GROUND AND THE PLACEMENT AND COMPACTION OF THE FILL TO CERTIFY THE WORK IS BEING PERFORMED IN ACCORDANCE WITH THE APPROVED GRADING PLANS AND REPORTS.
16. THE GROUND SURFACE SHALL BE PREPARED TO RECEIVE FILL BY REMOVING VEGETATION, TOPSOIL, AND OTHER UNSUITABLE MATERIALS, EXCEPT FOR EXISTING TREES AND VEGETATION TO REMAIN, AND SCARIFYING THE GROUND TO PROVIDE A BOND WITH THE FILL MATERIAL. PROTECT REMAINING TREES DURING ALL OF CONSTRUCTION.
17. ALL FILL MATERIAL SHALL BE COMPACTED TO 90 PERCENT OF MAXIMUM DENSITY AS DETERMINED BY ASTMD 1557, MODIFIED PROCTOR, IN LIFTS AS RECOMMENDED IN THE GEOTECHNICAL ENGINEER'S REPORT, NOT TO EXCEED 8 INCHES IN DEPTH. THE CONTRACTOR SHALL OBTAIN AND PAY FOR ALL SOIL COMPACTION TESTS. SOILS COMPACTION TEST LOCATIONS WILL BE DETERMINED BY THE SOILS ENGINEER AND THE DEPARTMENT OF RECREATION AND PARKS.
18. ROCK(S) OR SIMILAR MATERIAL(S) GREATER THAN 8 INCHES IN DIAMETER SHALL NOT BE PLACED IN THE FILL UNLESS APPROVED BY THE GEOTECHNICAL ENGINEER.

PLANTING AND IRRIGATION NOTES

19. PLANTING AND IRRIGATION ON GRADED SLOPES SHALL BE INSTALLED TO PREVENT EROSION. THE PLANTING AND IRRIGATION SYSTEMS SHALL BE INSTALLED AS SOON AS PRACTICAL AFTER ROUGH GRADING. ALL SLOPE PLANTING MUST BE WELL ESTABLISHED PRIOR TO FINAL GRADING APPROVAL.

REGISTERED PROFESSIONAL ENGINEER
IVAN W. K. CHIU
No. C44672
EXP. 03/31/2026
CIVIL
STATE OF CALIFORNIA

NO.	DATE	REVISION

CALCIVIC ENGINEERING GROUP
CONSULTING ENGINEERS & LAND SURVEYORS
CIVIL / STRUCTURAL / LAND SURVEYING
2160 PARKHILL WAY, ALTADENA, CALIFORNIA 91001
TEL (626) 798-2828 FAX(626) 798-6844
E-MAIL calcivic@earthlink.net

GRADING PLAN
GENERAL NOTES

OAKS STAIRWAY & OVERLOOK
EAST FORK, SAN GABRIEL RIVER

CHECKED BY I.C.
DRAWN BY K.H.
PLAN SCALE AS SHOWN
DATE 04/27/23
JOB NO. 042723
SHEET NO. C-1.00 OF 6 SHTS