created by EULUM DESIGN powered by CASAMBI

THE gl&c SYSTEM

TRAN-CSB10-xx (PROTOCOL TRANSLATOR)

Bluetooth enabled protocol translator

Features & Benefits:

- 1 Channel BLE/0-10V dimming controller with 2A switched live output
- Controls a maximum of 5 drivers
- Bluetooth beacons
- Dimensions: 183mm x 49mm x 35mm
  72 mm x 52mm x 35mm

CE RoHS c UL us FC

Product Description

Bluetooth enabled translator converts BLE signal to 0-10v dimming output with 2A switched live output. Suitable for use with all 0-10v and 1-10v dimming drivers.

WARNING:
Cancer and Reproductive Harm
www.P65Warnings.ca.gov.

info@globallightingcontrols.com GL&C (800) 916-6874

created by EULUM DESIGN
powered by CASAMBI
THE gl&c SYSTEM

TRAN-CSB10-xx (PROTOCOL TRANSLATOR)

Bluetooth enabled protocol translator

Specifications:

AC Input:

Voltage range:	120-277 vac

Channel output:

0-10V	2 or 4 channels

Operating conditions:

Ambient temperature (ta)	-4°F to +113°F (-20°C to +45°C)
Max. case temperature (tc)	+158°F (+70 °C)
Storage temperature	-13°F to +158°F (-25°C to +70°C)
Humidity	0-80% non-condensing

Safety Compliance:

Ingress Protection	IP20 (indoor use only)
Protection Class	Class 1
UL Listed	

Mechanical:

Dimensions	183mm x 49mm x 35mm 72 mm x 52mm x 35mm

info@globallightingcontrols.com GL&C (800) 916-6874

created by EULUM DESIGN
powered by CASAMBI
THE gl&c SYSTEM

TRAN-CSB10-xx (PROTOCOL TRANSLATOR)

Bluetooth enabled protocol translator

Specifications (Continued):

FCC Compliance Statement:
This device complies with part 15 of the FCC Rules. Operation is subject to the following conditions:
(1) This device may not cause harmful interference, and
(2) this device must accept any interference received, including interference that may cause undesired operation.

FCC Radiation Exposure Statement:
This device complies with FCC radiation exposure limits for an uncontrolled environment. This device shall be installed and operated with a minimum distance of 8” (20cm) between users or bystanders and the device.

FCC Interference Statement:
This equipment complies as a Class B digital device pursuant to Part 15 of the FCC Rules. These limits are designed to provide reasonable protection against harmful interference in a residential installation. This equipment generates, uses and can radiate radio frequency energy. If not used in accordance with manufacturer's installation guidelines, this device may cause harmful interference with other radio communications. Casambi provides no guarantee that interference will not occur in any particular installation.

Radiation Exposure Statement for Canada:
This device complies with Industry Canada’s license-exempt RSSs. Operation is subject to the following conditions:
(1) This device may not cause interference
(2) This device must accept any interference, including interference that may cause undesired operation of this device.
This equipment is exempt from the routine RF exposure evaluation requirements of RSS-102. This equipment should be installed and operated with a minimum distance of 20 cm between the antenna and the user or bystanders.

Le présent appareil est conforme aux CNR d’Industrie Canada applicables aux appareils radio exempts de licence. L’exploitation est autorisée aux deux conditions suivantes:
(1) l’appareil ne doit pas produire de brouillage;
(2) l’utilisateur de l’appareil doit accepter tout brouillage radioélectrique subi, même si le brouillage est susceptible d’en compromettre le fonctionnement.
Ce matériel n’est pas sujet à l’évaluation habituelle d’exposition RF selon RSS102. Ce matériel devrait être installé et exploité en gardant une distance minimale de 20 cm
entre l’antenne et l’utilisateur ou les spectateurs.

General Warning:
Changes or modifications not expressly approved by Casambi Technologies Oy will void all warranties and liability claims. This document subject to change without notice.

TRAN-CSB10-xx (PROTOCOL TRANSLATOR)

Bluetooth enabled protocol translator

created by EULUM DESIGN
powered by CASAMBI

THE gl&c SYSTEM

Wiring Diagrams:

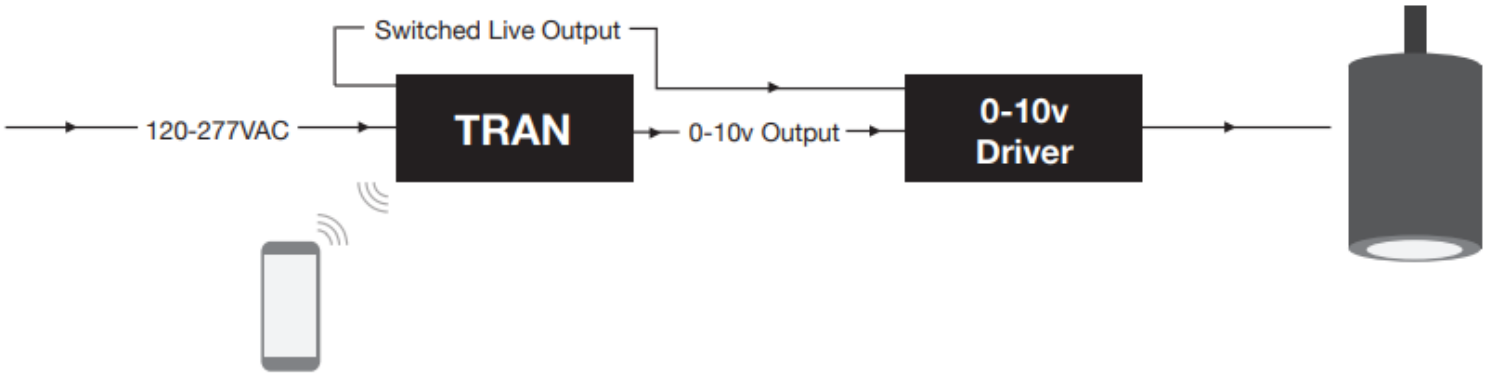

Ordering Information:

Qty:	Part Number:	Description:
	TRAN-CSB10-E-SL	1 Channel BLE/10V Dimmer, 2A switched live output. 120-277VAC. Wires accessible via side of module.
	TRAN-CSB10-E	1 Channel BLE/10V Dimmer. 120-277VAC. Wires accessible via side of module.
	TRAN-CSB10-J-SL	1 Channel BLE/10V Dimmer, 2A switched live output. 120-277VAC. Wires accessible via back of module.
	TRAN-CSB10-J	1 Channel BLE/10V Dimmer. 120-277VAC. Wires accessible via back of module.
	TRAN-CSB10-4	4 Channel BLE/10V Dimmer, 2A switched live output. 120-277VAC.
	TRAN-CSB10-2	2 Channel BLE/10V Dimmer, 2A switched live output. 120-277VAC.

TRAN-CSB10-xx (PROTOCOL TRANSLATOR)

Bluetooth enabled protocol translator

created by EULUM DESIGN
powered by CASAMBI
THE gl&c SYSTEM

Typical Casambi System Diagram:

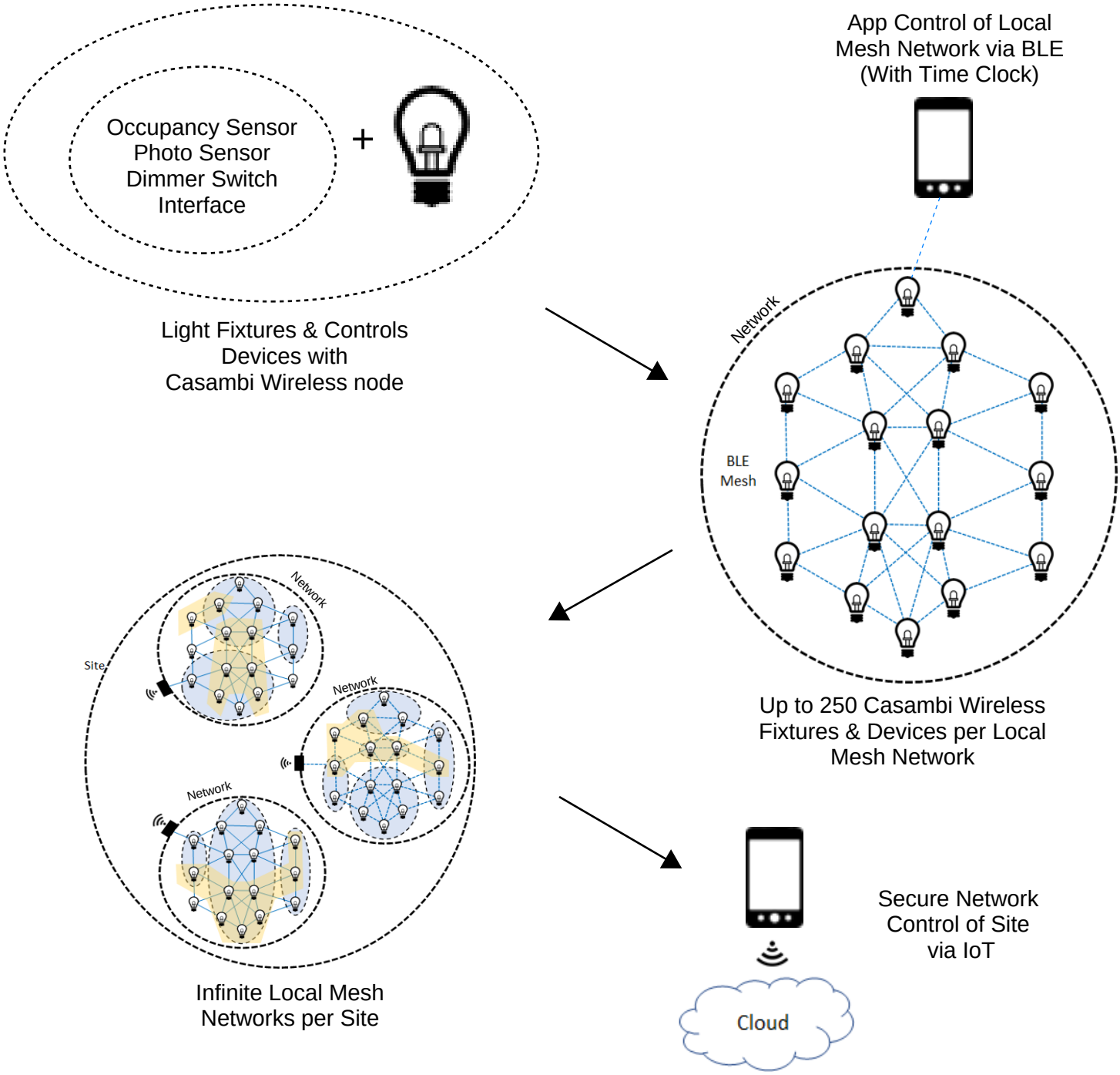

info@globallightingcontrols.com GL&C (800) 916-6874