PARTS LIST				
ITEM	QTY	PART NUMBER	DESCRIPTION	REV
1	5	1098A33	Snap-in Recessed Pull Handle	-
2	10	11435A14	16 Inch Drawer Slide - Steel	-
3	5	210103135	Drawer Handle Trim - 24 Ga SS	-
4	5	210107000	Drawer Felt Lining	-
5	1	210501100	21"W x 36"H x 24" D 5 Drawer AHU Body Wldmt	A
6	5	210501101	21W x 24D AHU Drawer Wldmt	B
7	5	505	Coin and Bill Tray with Locking Lid	-
8	10	8693K111	EPDM Rubber Trim - 21.875 inches Long	-
9	10	90022A142	Steel Pan Head Torx Screw, #6-32 X 1/4	-
10	94	90022A180	Steel Pan Head Torx Screw, #8-32 x 1/4	-
11	1	91253A144	Flat Head Screw #6-32 x 1/4	-
12	5	AP037	Adjustable Pin, 3/8 Long	-
13	1	CB101	Lock Assembly	-
14	5	DC-500	Drawer Clip, Standard	-
15	1	LB-360	Lock Bar, 36", Cut to 32"	-
16	1	LR-100	Lockbar retainer	-
17	1	MFW23138	Cam Lock With Hook Cam	-

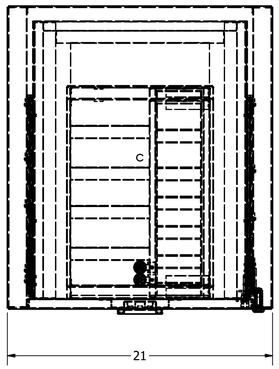

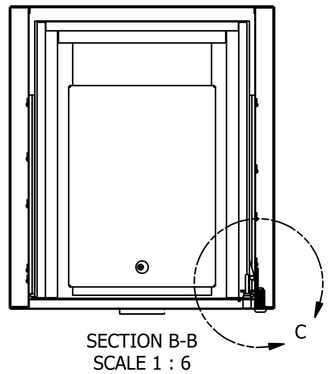

SECTION B-B
SCALE 1 : 6

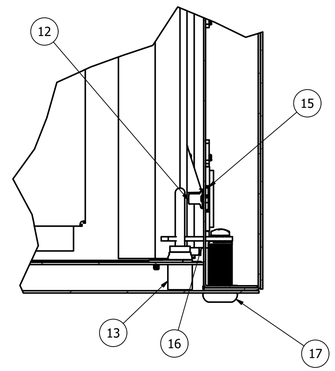

DETAIL C
SCALE 1 : 2

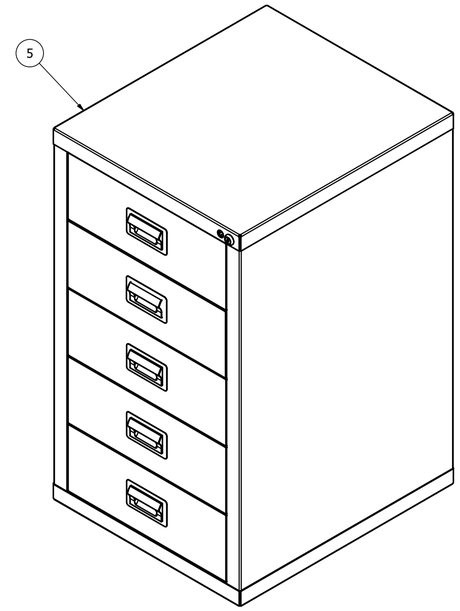

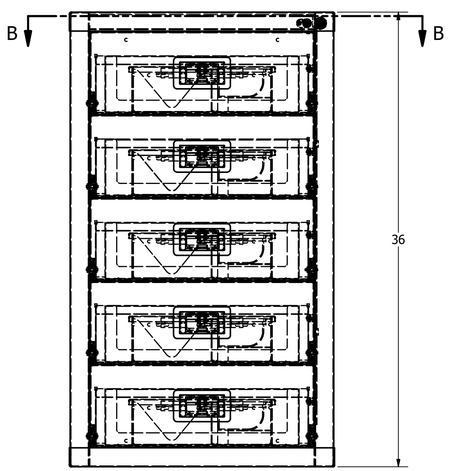

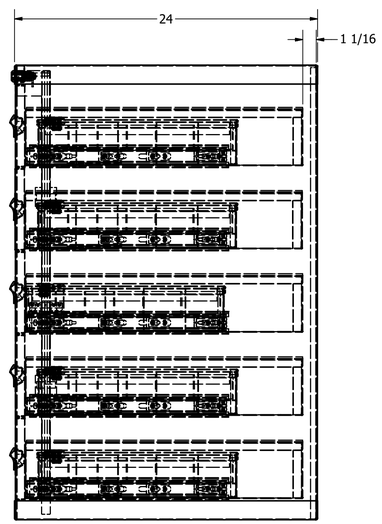

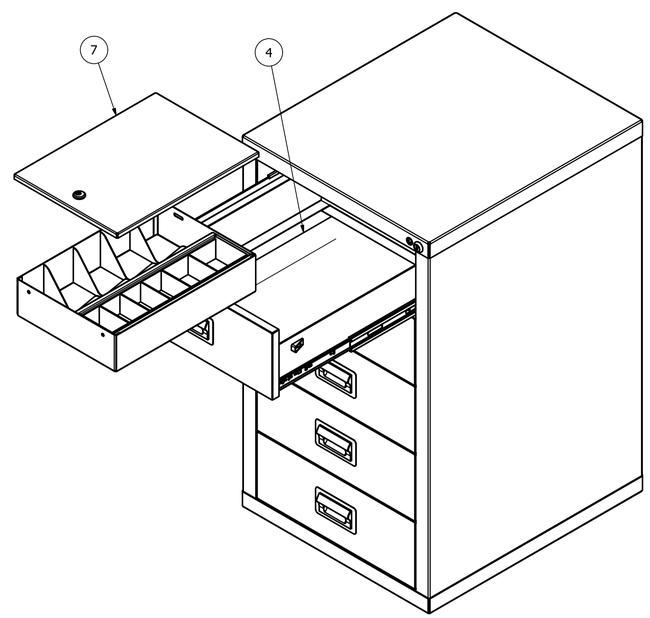

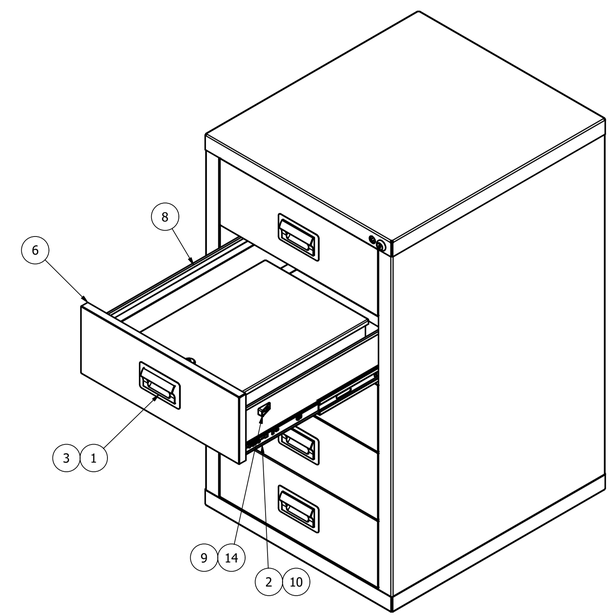

DRAWN RS	TITLE 21W x 36H x 24D 5 Drawer AHU Assembly
DATE 2023-11-28	
Sheet Size D	DWG NO 210501102 — REV A
UNSPECIFIED LIMITS 2 DIGITS: +/- .015 3 DIGITS: +/- .005 FRACTIONAL: +/- 1/32 ANGULAR: +/- 1/2°	Stonegate Security Products Barrie, ON, Canada (705) 790-6330
SCALE 1 : 6	MATERIAL — SHEET 1 OF 1