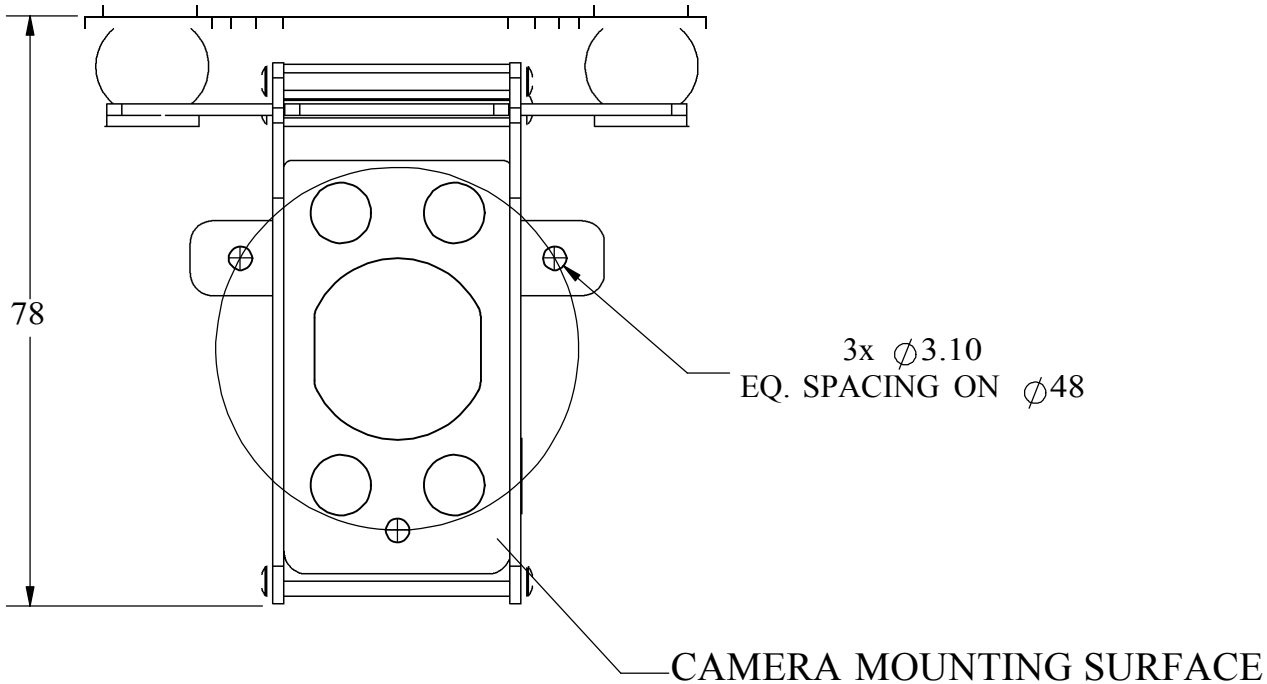
78
3x ∅3.10
EQ. SPACING ON ∅48
CAMERA MOUNTING SURFACE

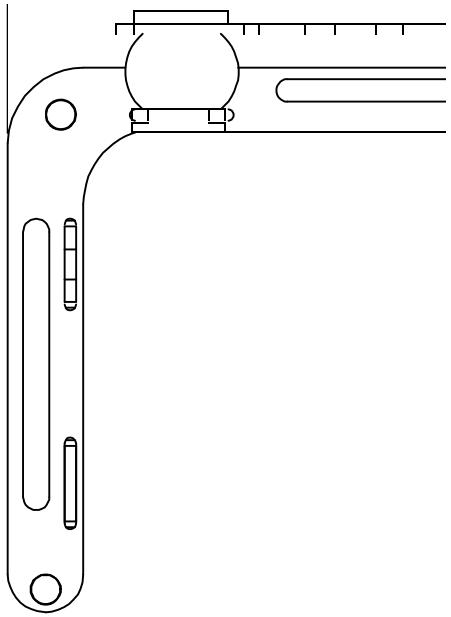

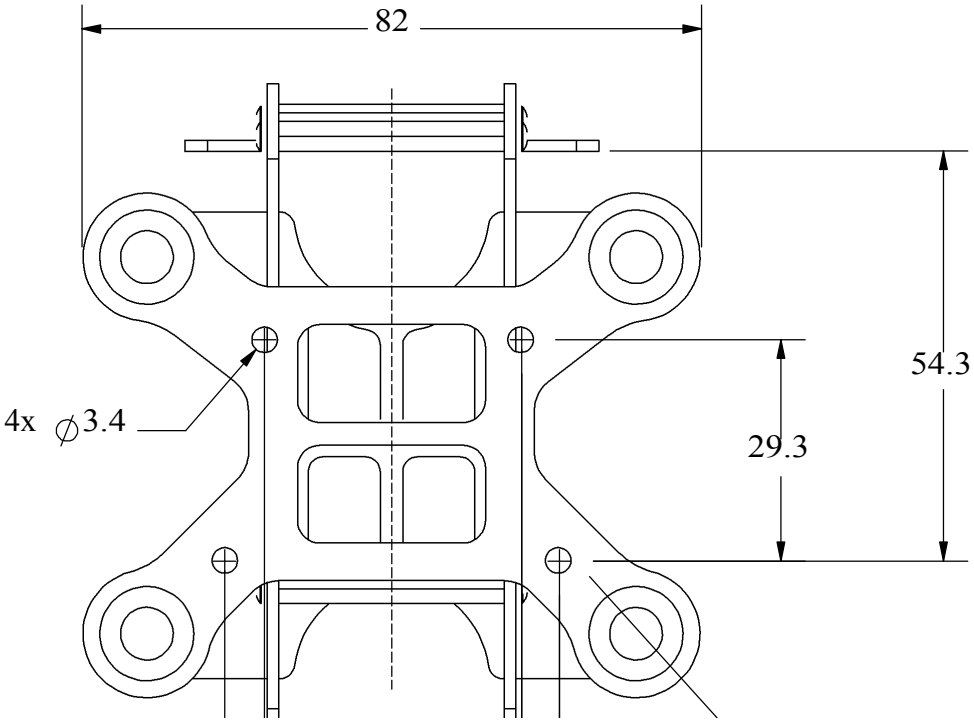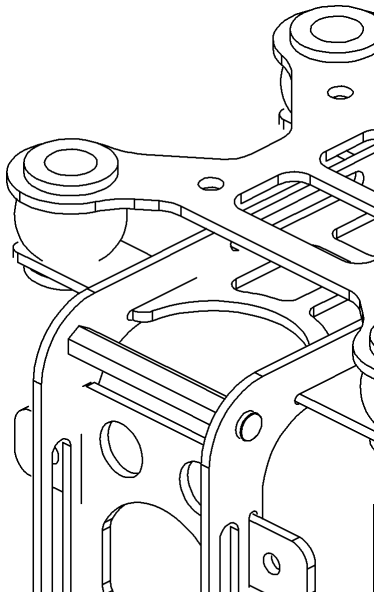
82
54.3
29.3
4x ∅3.4