STAMFORD VOL. FIRE COMPANY
PUMPER
TID NO. 13805

BODY
- Bolted Painted Stainless Steel Body
- ROM Roll Up Doors
- Rear Slide-In Ladder and Pike Pole Storage
- Rear Slide-In Hard Suction Storage
- Storage for 12 SCBA Bottles in Wheel Wells
- Roll-Out Storage Trays
- In Compartment SCBA Brackets
- In-Compartment Mounted Tool Boards

CHASSIS
- Freightliner M2 106 2 Door Chassis
- Cummins ISL9 360 HP Engine
- 3000 EVS Transmission
- Back-Up Camera
- Front Mounted Tow Hooks

TANK
- 1000 Gallon UPF Tank
- Class One ITL-40

PUMP
- Hale Qmax 1500 GPM Pump
- Hale SAM Pressure Governor
- Hale 3.3 Class A Foam System
- Left side: (2) 2.5" Discharges
  2.5" Intake
  Master Intake
- Right side: (2) 2.5" Discharges
  Master Intake
- (2) Booster Reels
- Rear 2.5" Discharge

ELECTRICAL
- FireTech HiViz 15" Bumper Brow Light
- Whelen Warning Lighting
- Fire Research SPA530-Q28 Telescoping Lights
- FRC LED 900-Q65 Scene Lights
- Xantex 200 Watt Inverter
- ILI LED Strip Compartment Lighting

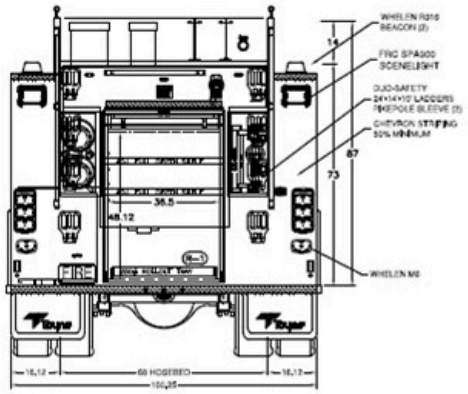

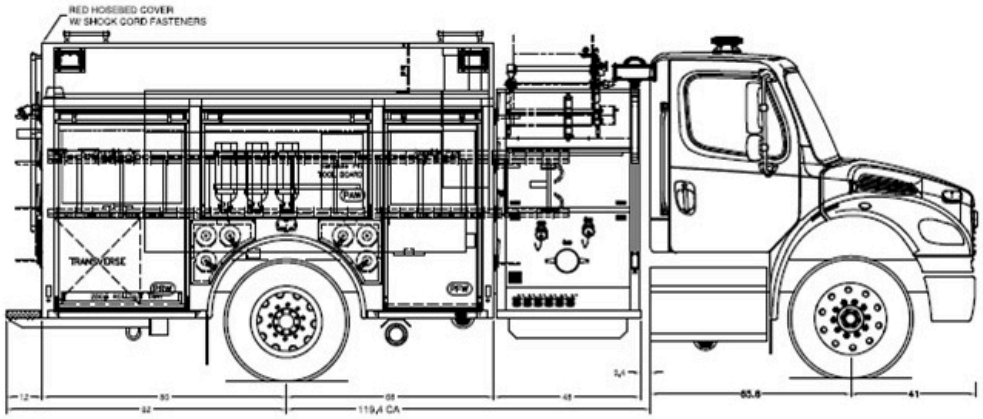

COMP.	HDGHT	WIDTH	USABLE DEPTH UPPER	USABLE DEPTH LOWER	DIVIDE HEIGHT	FT³
DFW	67.12	35.88	14	26	28	26.50
DAW	37.12	63.75	14	–	–	19.18
DRW	67.12	44.00	14	26	28	32.49
PFW	67.12	35.88	14	26	28	26.50
PAW	37.12	63.75	14	–	–	19.18
PRW	67.12	44.00	14	26	28	32.49
R-1	56.12	44.00	–	30	–	42.77
HOSEBED	14	68	–	120	–	66.11
FRONT XLAY	16	7.5	–	73.75	–	5.12
MIDDLE XLAY	16	7.5	–	73.75	–	5.12
REAR XLAY	16	11	–	73.75	–	7.51

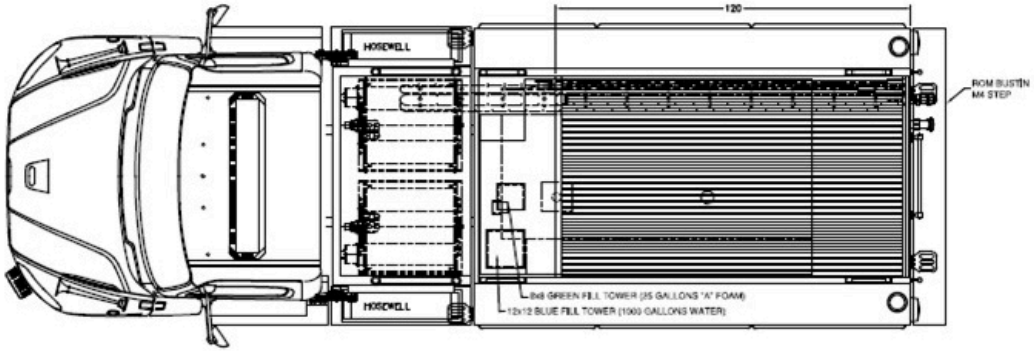

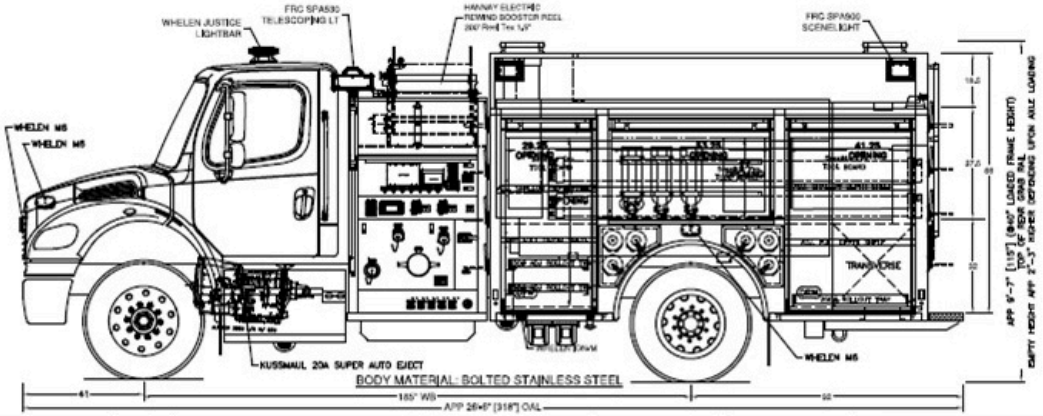

NOTE:
DIMENSIONS SHOWN ARE APPROXIMATE AND ARE SUBJECT TO MINOR CHANGE AS MAY BE FOUND NECESSARY DURING CONSTRUCTION. MINOR DETAILS MAY NOT BE SHOWN. IF DISCREPANCIES EXIST BETWEEN THIS DRAWING AND THE WRITTEN SPECIFICATIONS PROVIDED BY TOYNE, THE WRITTEN SPECIFICATIONS SHALL PREVAIL.

ORIGINAL DRAWING	12JULY22	CHASSIS:	FREIGHTLINER M2 106 2 DOOR 4x2	SCALE: 1/66	SHEET: A
REV A	21DEC22	WB-CA-AF:	185"-119.4"-47" D17	CITY:	STAMFORD
ISR	03FEB23	BODY MATL:	BOLTED STAINLESS STEEL	STATE:	–
C/O 1	02FEB24	PUMP:	HALE Q-MAX 1500	DLR:	VRS
AS BUILT: ANDY	07MAR24	TANK:	1000/25 UPF POLY-TANK III	CAD:	GROSSMAN
		FOAM SYSTEM:	HALE SMART FOAM 3.3	DATE:	12 JULY 2022
		GENERATOR:	N/A	FILE:	STAMFORD22

Toyne
Built to take the call.
BREDA, IA 51436
800-648-3358
WWW.TOYNE.COM

STAMFORD
CUSTOM PUMPER