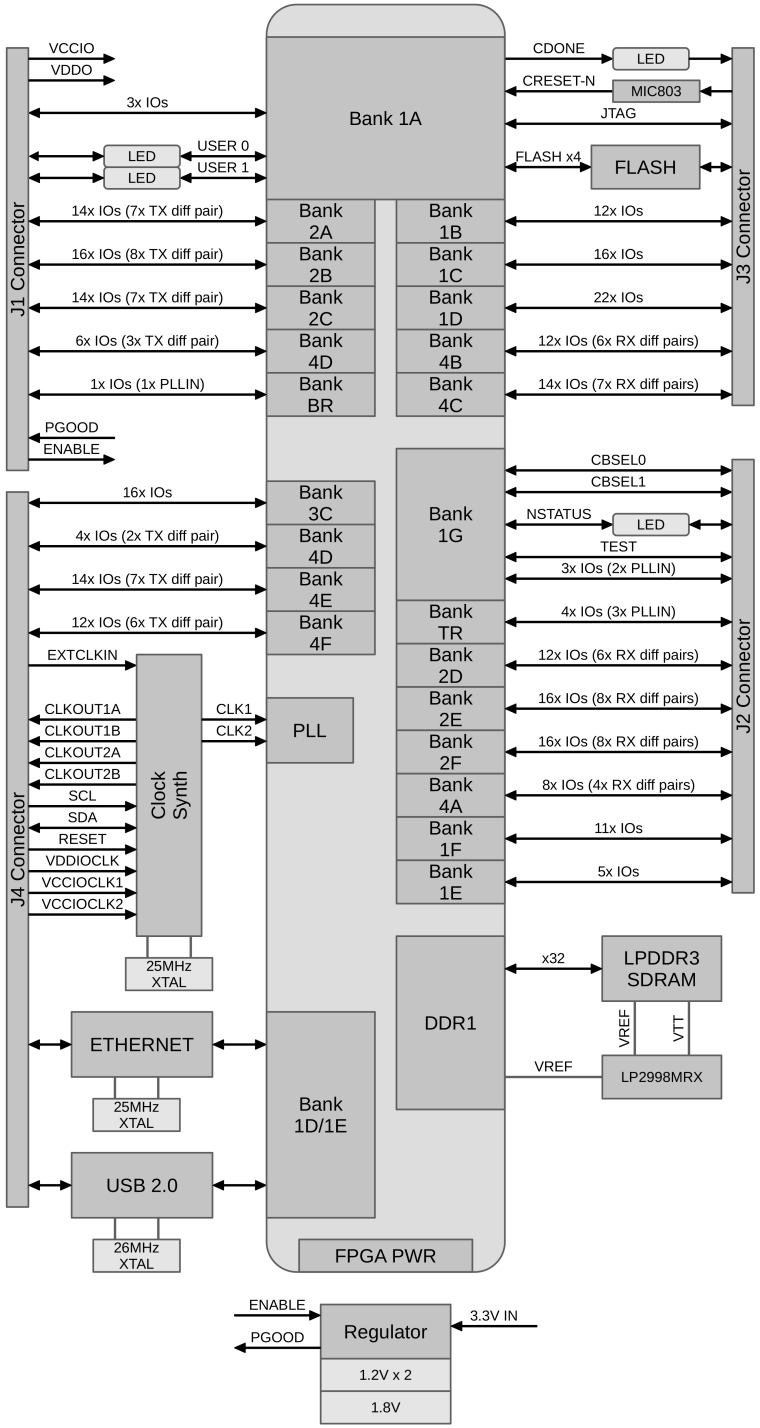

Sheet Table

PAGE 2 – CONNECTOR

PAGE 3 – CONFIG / BANK1

PAGE 4 – MEMORY

PAGE 5 – BANK 2/3/TR/BR

PAGE 6 – BANK 4

PAGE 7 – CLOCK SYNTHESIZER

PAGE 8 – USB

PAGE 9 – ETHERNET

PAGE 10 – POWER

PAGE 11 – BOM 3301-05

PAGE 12 – BOM 3302-05

PAGE 13 – REVISION / NOTES

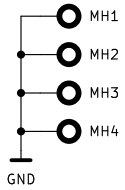

XLSOM
XLSOM, llc
Palm Bay
FL 32907

Title: XLM3301-3302 MODULE

Size: USLetter	Doc#: S330102-A-E	Rev: A
Date: 2025-08-07	Sheet: 1/13	

Copyright 2025 © XLSOM,llc All Rights Reserved

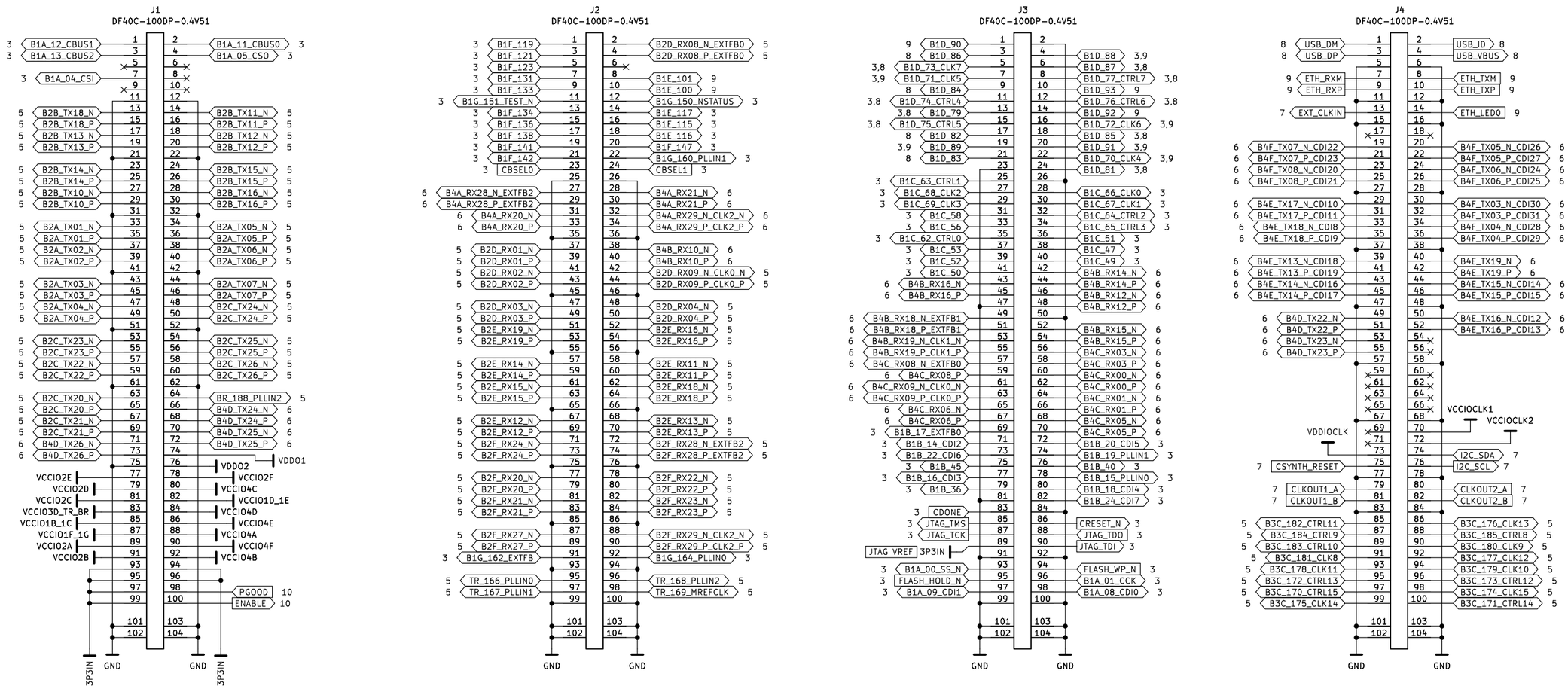

POWER FLAGS

3P3IN	VCCIO2B	VCCIO2E
VCCIO2D	VCCIO2C	VCCIO4D
VCCIO2F	VCCIO3D_TR_BR	VCCIO4E
VCCIO4C	VCCIO4A	VCCIO4F
VCCIO1D_1E	VCCIO4B	VCCIOCLK2
VCCIO2A	VCCIO1F_1G	VCCIOCLK1
VDDO1	VCCIO1B_1C	VDDIOCLK
VDDO2	GND	

XLSOM
XLSOM, llc
Palm Bay
FL 32907

Title: CONNECTOR

Size: USLedger	Doc#: S330102-A-E	Rev: A
Date: 2025-08-07	Sheet: 2/13	

Copyright 2025 © XLSOM,llc All Rights Reserved

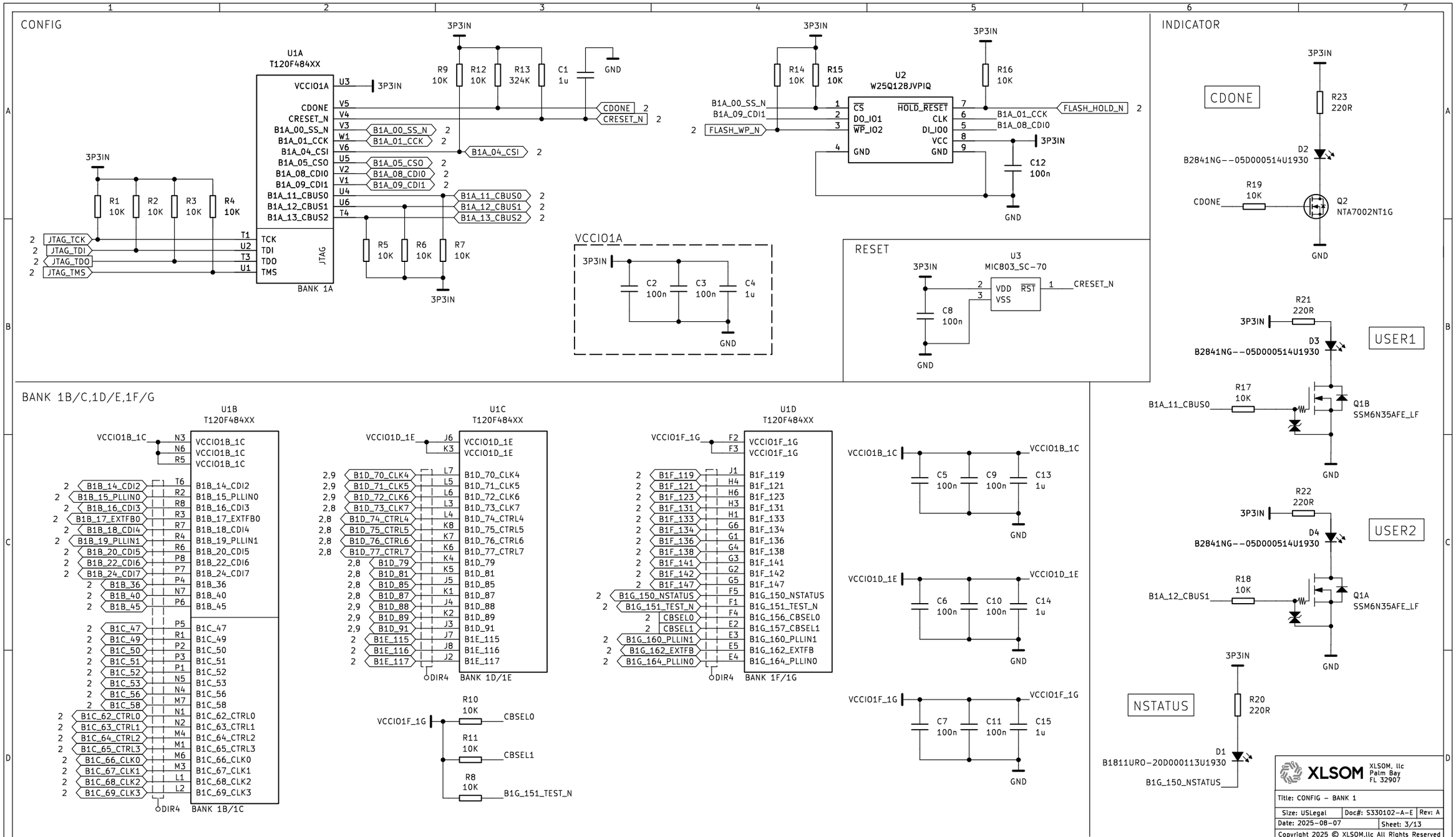
CONFIG
U1A
T120F484XX
VCCIO1A
CDONE
CRESET_N
B1A_00_SS_N
B1A_01_CCK
B1A_04_CSI
B1A_05_CSO
B1A_08_CDI0
B1A_09_CDI1
B1A_11_CBUS0
B1A_12_CBUS1
B1A_13_CBUS2
TCK
TDI
TDO
TMS
JTAG
BANK 1A
JTAG_TCK
JTAG_TDI
JTAG_TDO
JTAG_TMS
3P3IN
R1 10K
R2 10K
R3 10K
R4 10K
R5 10K
R6 10K
R7 10K
R9 10K
R12 10K
R13 324K
C1 1u
GND
U2
W25Q128JVPIQ
CS
DO_IO1
WP_IO2
GND
HOLD_RESET
CLK
DI_IO0
VCC
GND
FLASH_WP_N
FLASH_HOLD_N
R14 10K
R15 10K
R16 10K
C12 100n
VCCIO1A
C2 100n
C3 100n
C4 1u
RESET
U3
MIC803_SC-70
VDD
VSS
RST
C8 100n
INDICATOR
CDONE
R23 220R
D2
B2841NG--05D000514U1930
R19 10K
Q2
NTA7002NT1G
USER1
R21 220R
D3
B2841NG--05D000514U1930
R17 10K
Q1B
SSM6N35AFE_LF
USER2
R22 220R
D4
B2841NG--05D000514U1930
R18 10K
Q1A
SSM6N35AFE_LF
NSTATUS
R20 220R
D1
B1811URO-20D000113U1930
B1G_150_NSTATUS
BANK 1B/C,1D/E,1F/G
U1B
T120F484XX
VCCIO1B_1C
B1B_14_CDI2
B1B_15_PLLIN0
B1B_16_CDI3
B1B_17_EXTFB0
B1B_18_CDI4
B1B_19_PLLIN1
B1B_20_CDI5
B1B_22_CDI6
B1B_24_CDI7
B1B_36
B1B_40
B1B_45
B1C_47
B1C_49
B1C_50
B1C_51
B1C_52
B1C_53
B1C_56
B1C_58
B1C_62_CTRL0
B1C_63_CTRL1
B1C_64_CTRL2
B1C_65_CTRL3
B1C_66_CLK0
B1C_67_CLK1
B1C_68_CLK2
B1C_69_CLK3
DIR4
BANK 1B/1C
U1C
T120F484XX
VCCIO1D_1E
B1D_70_CLK4
B1D_71_CLK5
B1D_72_CLK6
B1D_73_CLK7
B1D_74_CTRL4
B1D_75_CTRL5
B1D_76_CTRL6
B1D_77_CTRL7
B1D_79
B1D_81
B1D_85
B1D_87
B1D_88
B1D_89
B1D_91
B1E_115
B1E_116
B1E_117
BANK 1D/1E
U1D
T120F484XX
VCCIO1F_1G
B1F_119
B1F_121
B1F_123
B1F_131
B1F_133
B1F_134
B1F_136
B1F_138
B1F_141
B1F_142
B1F_147
B1G_150_NSTATUS
B1G_151_TEST_N
CBSEL0
CBSEL1
B1G_160_PLLIN1
B1G_162_EXTFB
B1G_164_PLLIN0
BANK 1F/1G
R10 10K
R11 10K
R8 10K
C5 100n
C9 100n
C13 1u
C6 100n
C10 100n
C14 1u
C7 100n
C11 100n
C15 1u
XLSOM
XLSOM, llc
Palm Bay
FL 32907
Title: CONFIG - BANK 1
Size: USLegal
Doc#: S330102-A-E
Rev: A
Date: 2025-08-07
Sheet: 3/13
Copyright 2025 © XLSOM,llc All Rights Reserved

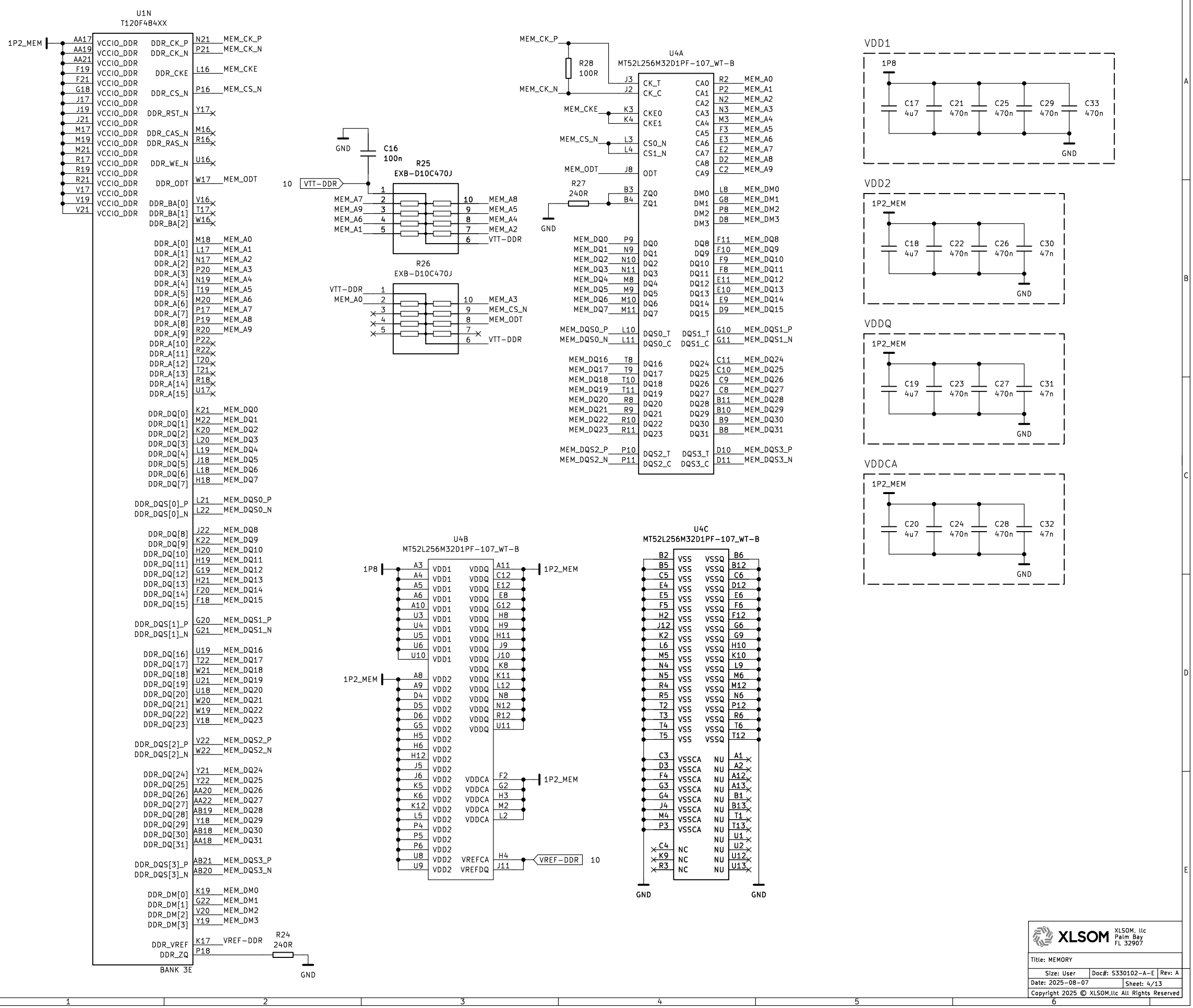
U1N
T120F484XX
1P2_MEM
BANK 3E
U4A
MT52L256M32D1PF-107_WT-B
U4B
MT52L256M32D1PF-107_WT-B
U4C
MT52L256M32D1PF-107_WT-B
R25
EXB-D10C470J
R26
EXB-D10C470J
R24
240R
R27
240R
R28
100R
C16
100n
VTT-DDR
VREF-DDR
GND
1P8
VDD1
C17 4u7
C21 470n
C25 470n
C29 470n
C33 470n
VDD2
1P2_MEM
C18 4u7
C22 470n
C26 470n
C30 47n
VDDQ
C19 4u7
C23 470n
C27 470n
C31 47n
VDDCA
C20 4u7
C24 470n
C28 470n
C32 47n
XLSOM
XLSOM, llc
Palm Bay
FL 32907
Title: MEMORY
Size: User
Doc#: S330102-A-E
Rev: A
Date: 2025-08-07
Sheet: 4/13
Copyright 2025 © XLSOM,llc All Rights Reserved

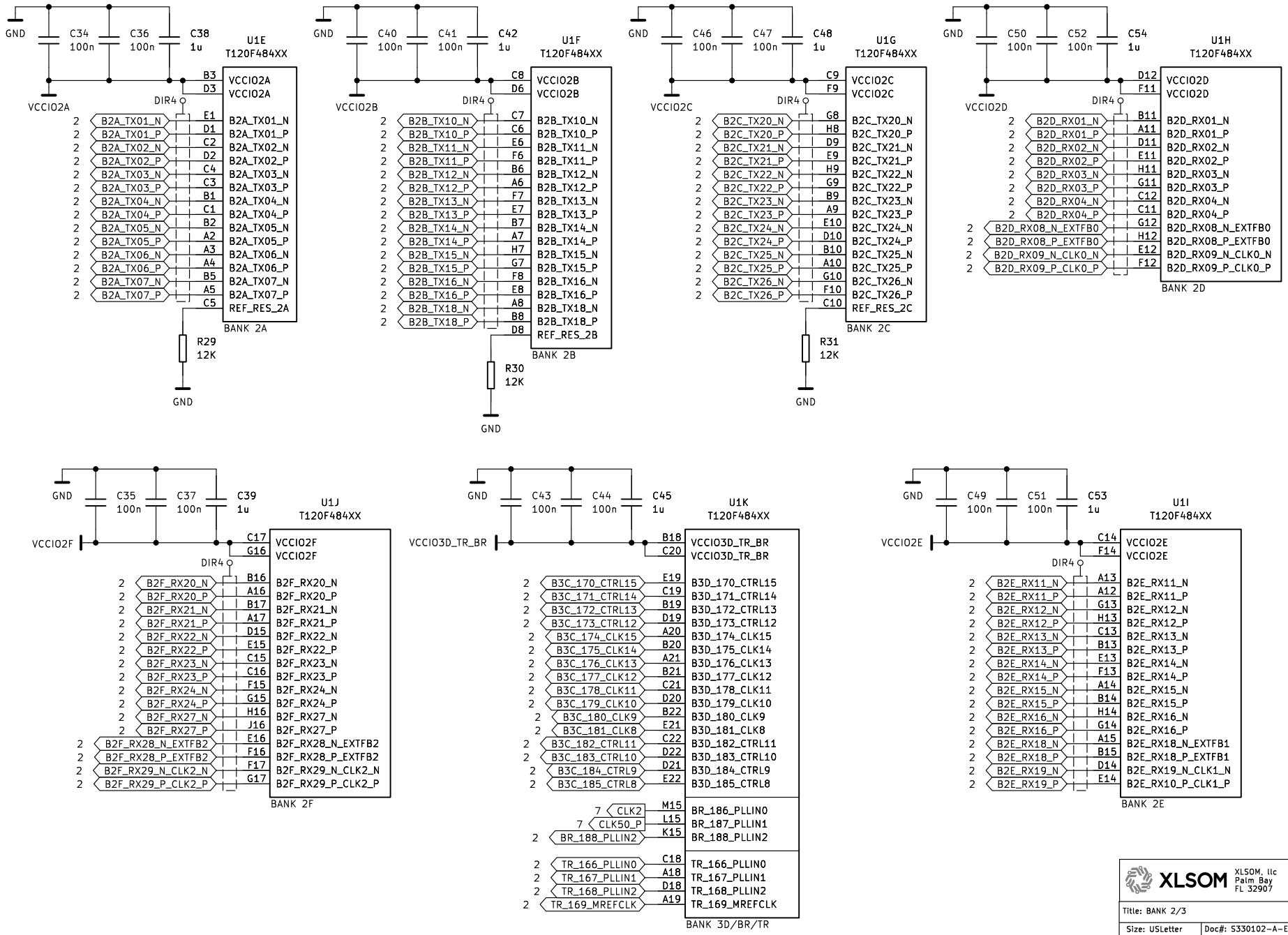

XLSOM, llc
Palm Bay
FL 32907

Title: BANK 2/3

Size: USLetter	Doc#: S330102-A-E	Rev: A
Date: 2025-08-07	Sheet: 5/13	

Copyright 2025 © XLSOM,llc All Rights Reserved

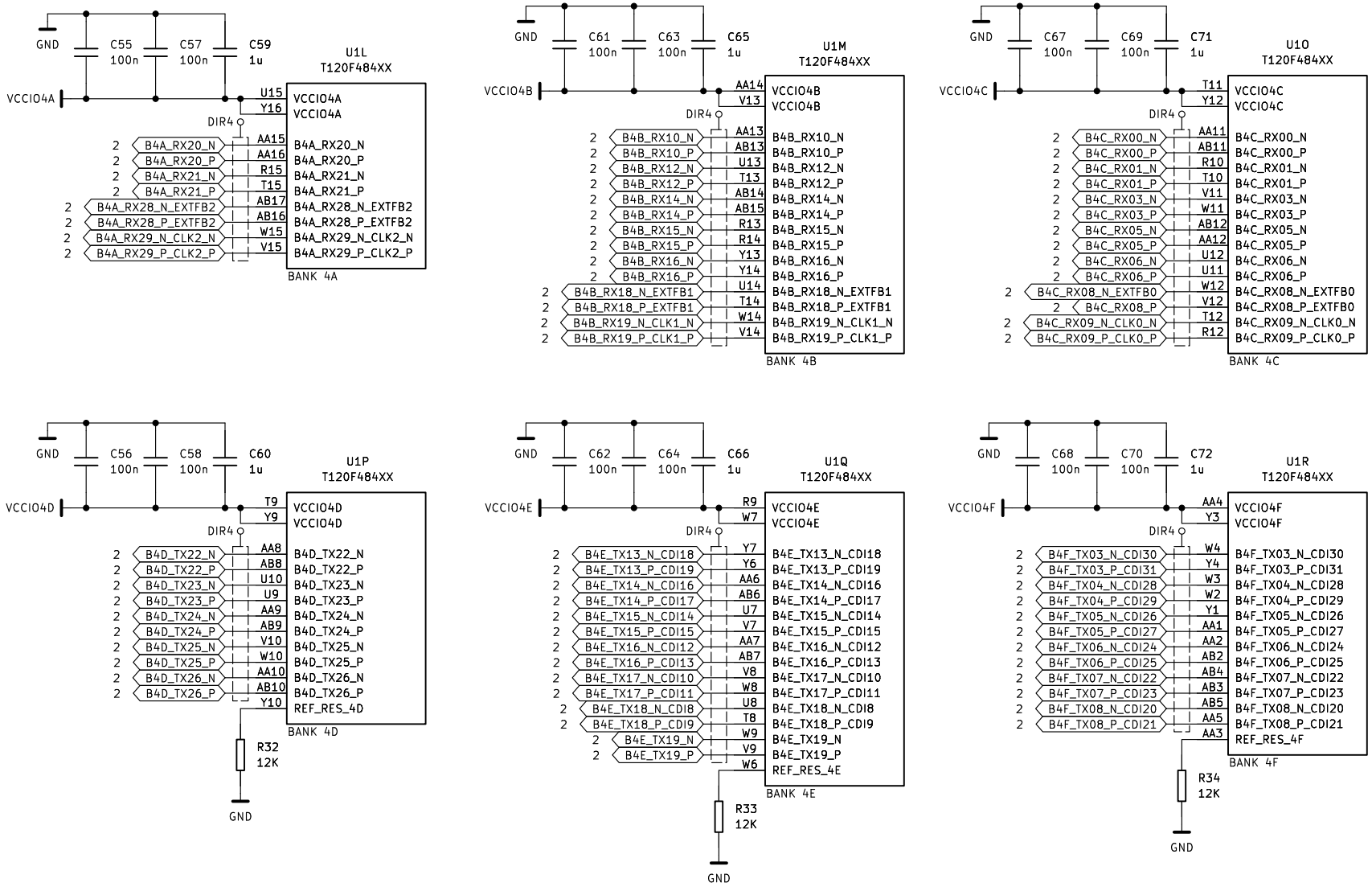

XLSOM
XLSOM, llc
Palm Bay
FL 32907

Title: BANK 4

Size: USLetter	Doc#: S330102-A-E	Rev: A
Date: 2025-08-07	Sheet: 6/13	

Copyright 2025 © XLSOM,llc All Rights Reserved

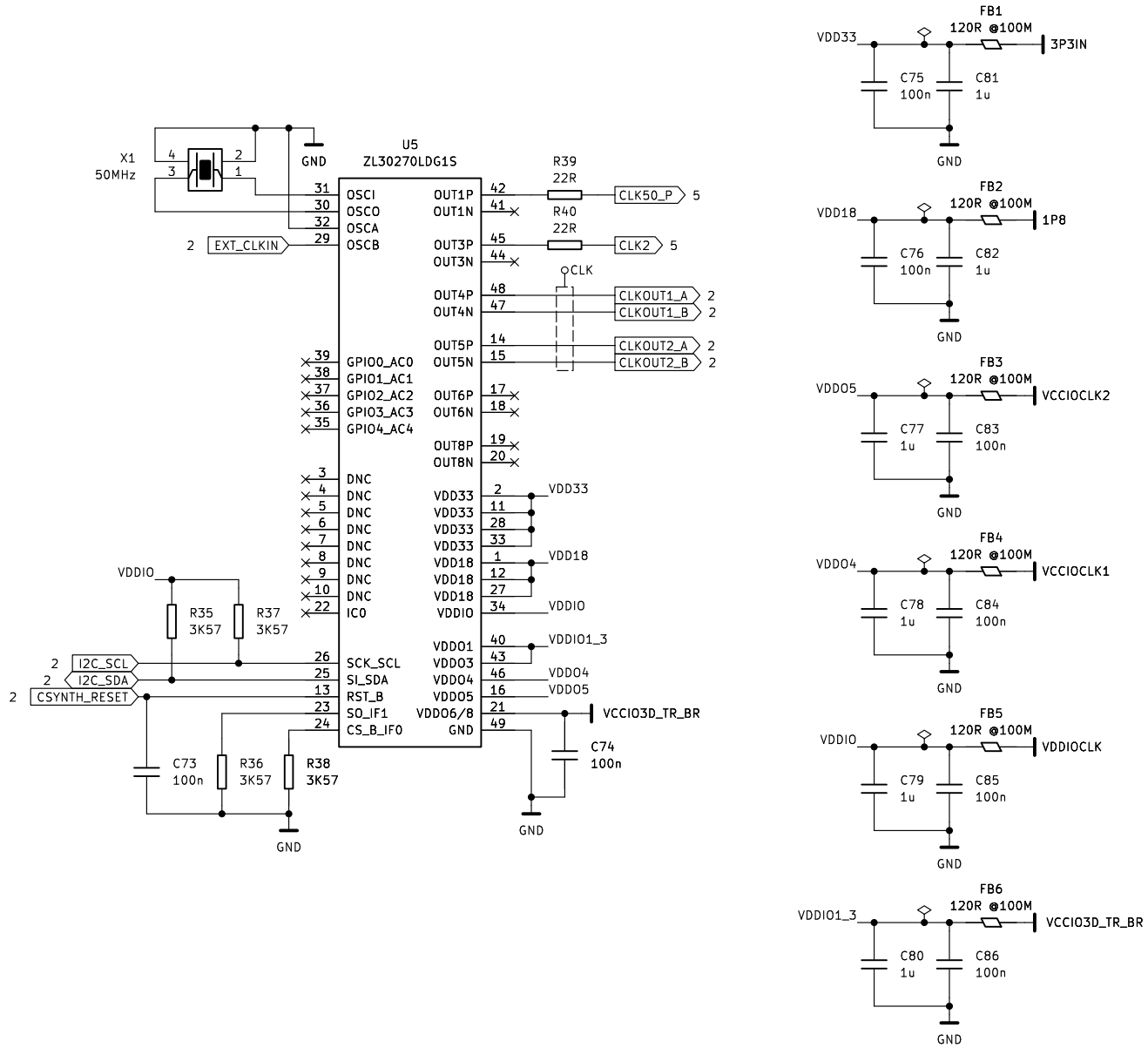

XLSOM
XLSOM, llc
Palm Bay
FL 32907

Title: CLOCK SYNTHESIZER

Size: USLetter	Doc#: S330102-A-E	Rev: A
Date: 2025-08-07	Sheet: 7/13	

Copyright 2025 © XLSOM,llc All Rights Reserved

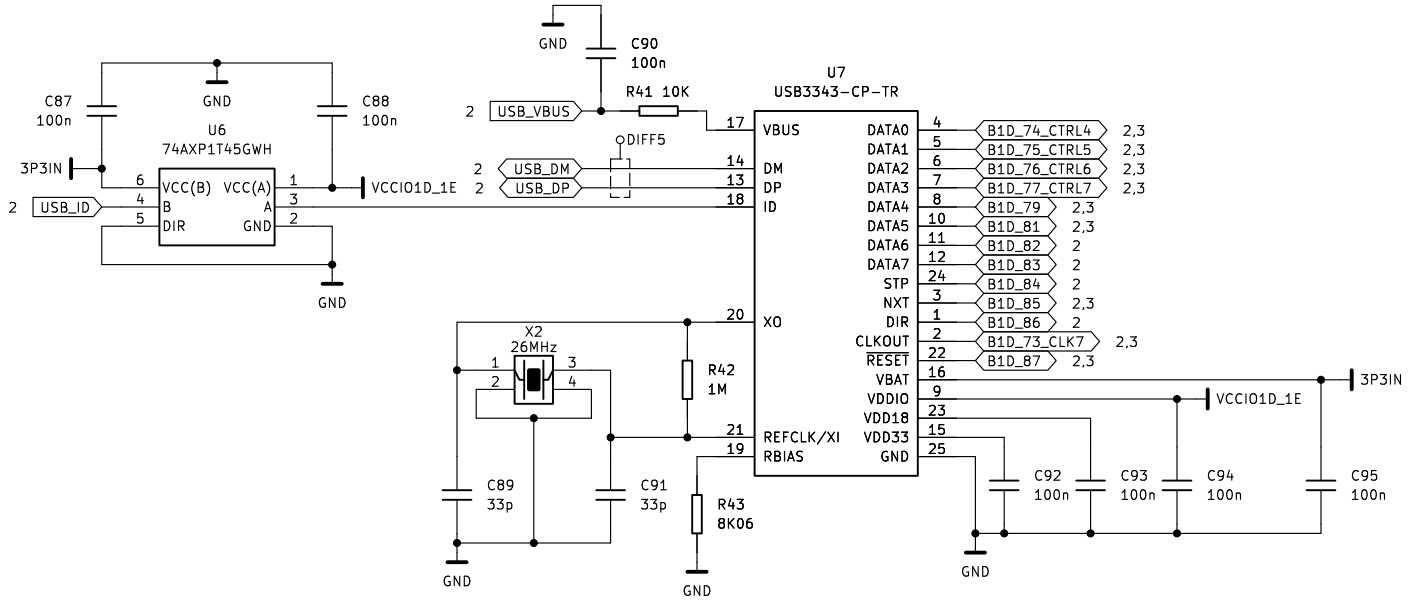

XLSOM
XLSOM, llc
Palm Bay
FL 32907

Title: USB 2.0

Size: USLetter	Doc#: S330102-A-E	Rev: A
Date: 2025-08-07	Sheet: 8/13	

Copyright 2025 © XLSOM,llc All Rights Reserved

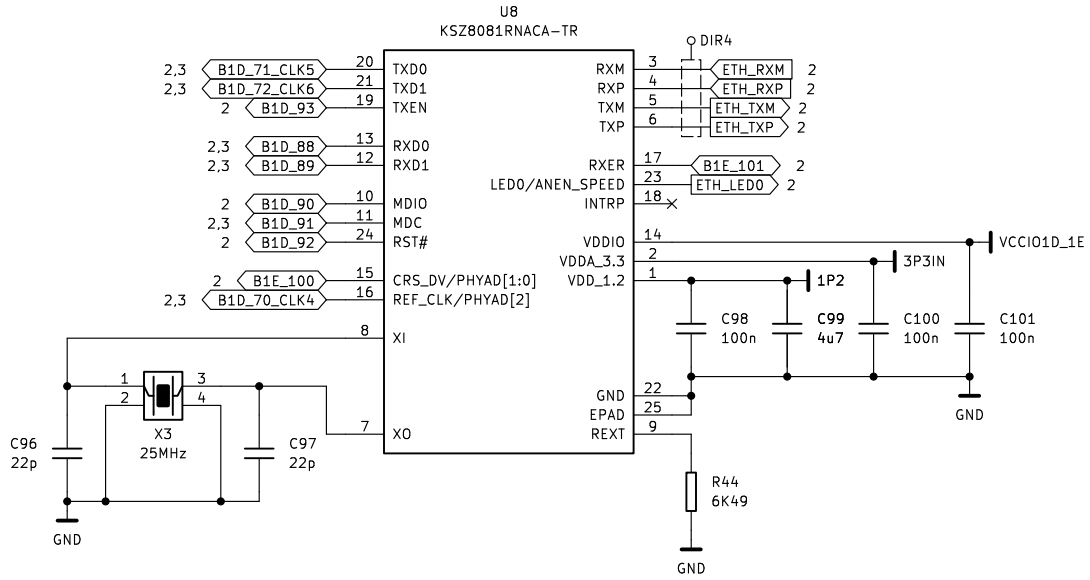

XLSOM
XLSOM, llc
Palm Bay
FL 32907

Title: ETHERNET

Size: USLetter	Doc#: S330102-A-E	Rev: A
Date: 2025-08-07	Sheet: 9/13	

Copyright 2025 © XLSOM,llc All Rights Reserved

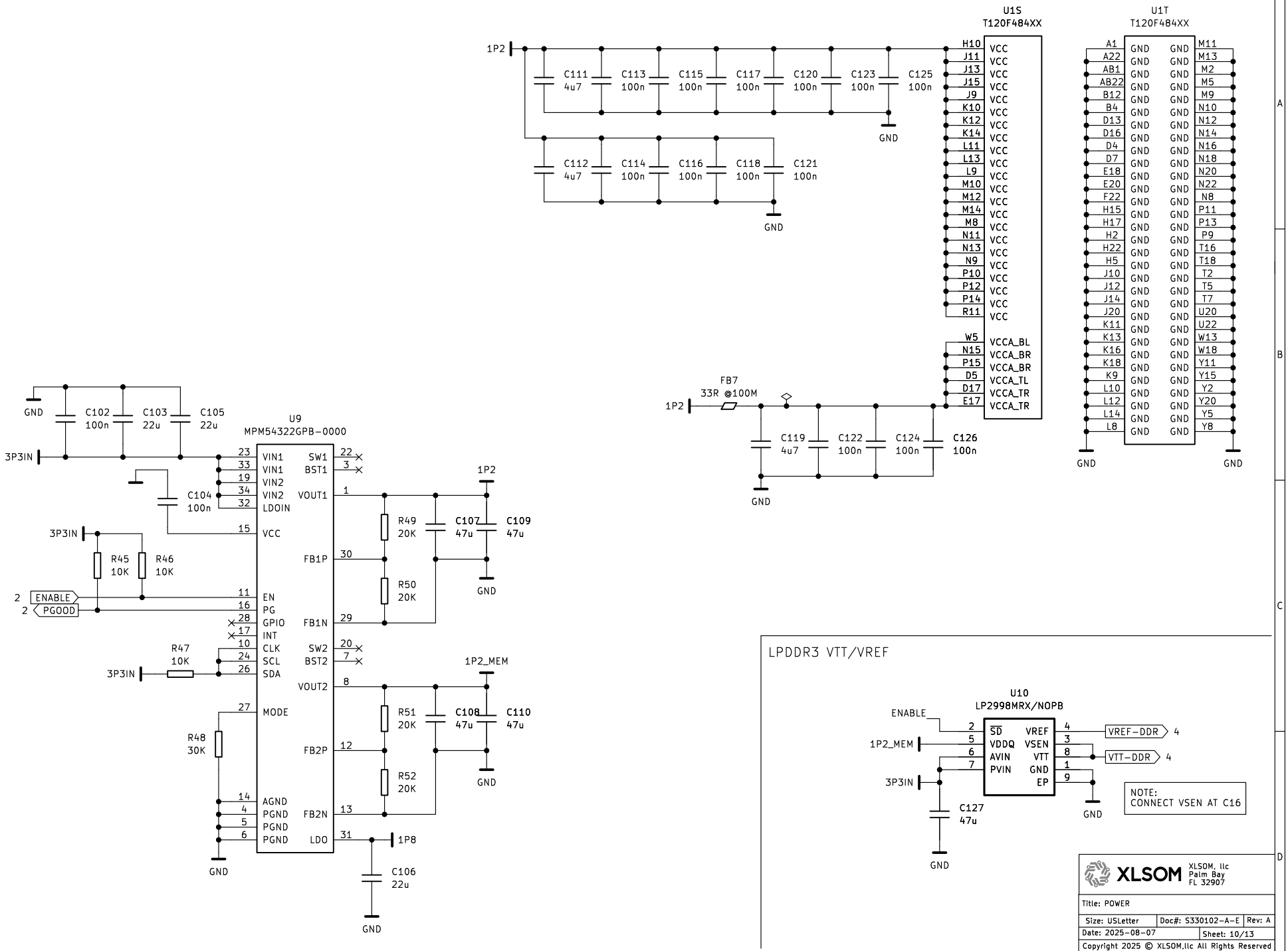
U1S
T120F484XX
U1T
T120F484XX
1P2
C111 4u7
C113 100n
C115 100n
C117 100n
C120 100n
C123 100n
C125 100n
C112 4u7
C114 100n
C116 100n
C118 100n
C121 100n
GND
FB7
33R @100M
C119 4u7
C122 100n
C124 100n
C126 100n
VCCA_BL
VCCA_BR
VCCA_TL
VCCA_TR
U9
MPM54322GPB-0000
3P3IN
C102 100n
C103 22u
C105 22u
C104 100n
R45 10K
R46 10K
ENABLE
PGOOD
R47 10K
R48 30K
R49 20K
R50 20K
R51 20K
R52 20K
C107 47u
C109 47u
C108 47u
C110 47u
1P2_MEM
1P8
C106 22u
VIN1
VIN2
LDOIN
VCC
EN
PG
GPIO
INT
CLK
SCL
SDA
MODE
AGND
PGND
SW1
BST1
VOUT1
FB1P
FB1N
SW2
BST2
VOUT2
FB2P
FB2N
LDO
LPDDR3 VTT/VREF
U10
LP2998MRX/NOPB
SD
VDDQ
AVIN
PVIN
VREF
VSEN
VTT
GND
EP
VREF-DDR
VTT-DDR
C127 47u
NOTE:
CONNECT VSEN AT C16
XLSOM
XLSOM, llc
Palm Bay
FL 32907
Title: POWER
Size: USLetter
Doc#: S330102-A-E
Rev: A
Date: 2025-08-07
Sheet: 10/13
Copyright 2025 © XLSOM,llc All Rights Reserved

XLSOM

Doc Title:	XLM3301 FPGA Module
Doc Type:	BOM
PN:	3301-05
Revision:	A
Date:	25/08/07
Doc#:	B3301-05-A-E

Item	Qty	Reference	Value	Description	Footprint	Mfr	PN
1	24	C1,C4,C13,C14,C15,C38,C39,C42,C45,C48,C53,C54,C59,C60,C65,C66,C71,C72,C77,C78,C79,C80,C81,C82	1u	CAP CER 1UF 6.3V X5R 0402	modules:C_0402_1005Metric	KEMET	C0402C105K9PACTU
2	70	C2,C3,C5,C6,C7,C8,C9,C10,C11,C12,C16,C34,C35,C36,C37,C40,C41,C43,C44,C46,C47,C49,C50,C51,C52,C55,C56,C57,C58,C61,C62,C63,C64,C67,C68,C69,C70,C73,C74,C75,C76,C83,C84,C85,C86,C87,C88,C90,C92,C93,C94,C95,C98,C100,C101,C102,C104,C113,C114,C115,C116,C117,C118,C120,C121,C122,C123,C124,C125,C126	100n	CAP CER 0.1UF 16V X7R 0402	modules:C_0402_1005Metric	Walsin Technology Corp.	0402B104K160CT
3	8	C17,C18,C19,C20,C99,C111,C112,C119	4u7	CAP CER 4.7UF 6.3V X5R 0402	modules:C_0402_1005Metric	Murata	GRM155R60J475ME87D
4	10	C21,C22,C23,C24,C25,C26,C27,C28,C29,C33	470n	CAP CER 0.47UF 6.3V X5R 0402	modules:C_0402_1005Metric	Murata	GRM155R60J474KE19D
5	3	C30,C31,C32	47n	CAP CER 0.047UF 6.3V X5R 0402	modules:C_0402_1005Metric	Murata	GRM155R60J473KA01D
6	2	C89,C91	33p	CAP CER 33PF 50V C0G/NP0 0402	modules:C_0402_1005Metric	Murata	GRM1555C1H330JA01D
7	2	C96,C97	22p	CAP CER 22PF 50V C0G/NP0 0402	modules:C_0402_1005Metric	Murata	GCM1555C1H220FA16D
8	3	C103,C105,C106	22u	CAP CER 22UF 6.3V X5R 0402	modules:C_0402_1005Metric	Murata	GRM158R60J226ME01D
9	5	C107,C108,C109,C110,C127	47u	CAP CER 47UF 6.3V X5R 0603	modules:C_0603_1608Metric	Murata	GRM188R60J476ME15D
10	1	D1	B1811URO-20D000113U1930	LED RED DIFFUSED SMD	modules:LED_0402_1005Metric_A	Harvatek	B1811URO-20D000113U1930
11	3	D2,D3,D4	B2841NG--05D000514U1930	LED GREEN CLEAR SMD	modules:LED_0402_1005Metric_A	Harvatek	B2841NG--05D000514U1930
12	6	FB1,FB2,FB3,FB4,FB5,FB6	120R @100M	FERRITE BEAD 120 OHM 0402 1LN	modules:L_0402_1005Metric	Murata	BLM15PX121SN1D
13	1	FB7	33R @100M	FERRITE BEAD 33 OHM 0402 1LN	modules:L_0402_1005Metric	Murata	BLM15PX330SN1D
14	4	J1,J2,J3,J4	DF40C-100DP-0.4V51	CONN PLUG 100POS SMD GOLD	modules:HIROSE_DF40C-100DP-0.4V51	Hirose	DF40C-100DP-0.4V(51)
15	1	Q1	SSM6N35AFE_LF	MOSFET 2N-CH 20V 0.25A ES6	modules:SSM6N35AFE_LF_ES6_TOS	Toshiba Semiconductor	SSM6N35AFE,LF
16	1	Q2	NTA7002NT1G	MOSFET N-CH 30V 154MA SC75	modules:NTA7002NT1G_SOT-416_1P65X0P9_ONS	Onsemi	NTA7002NT1G
17	22	R1,R2,R3,R4,R5,R6,R7,R8,R9,R10,R11,R12,R14,R15,R16,R17,R18,R19,R41,R45,R46,R47	10K	RES 10K OHM 1% 1/16W 0402	modules:R_0402_1005Metric	Stackpole	RMCF0402FT10K0
18	1	R13	324K	RES 324K OHM 1% 1/16W 0402	modules:R_0402_1005Metric	Stackpole	RMCF0402FT324K
19	4	R20,R21,R22,R23	220R	RES 220 OHM 5% 1/16W 0402	modules:R_0402_1005Metric	Stackpole	RMCF0402JT220R
20	2	R24,R27	240R	RES 240 OHM 1% 1/16W 0402	modules:R_0402_1005Metric	Stackpole	RMCF0402FT240R
21	2	R25,R26	EXB-D10C470J	RES ARRAY 8 RES 47 OHM 1206	modules:RNET_PAN_RESCAV63P320X160X65-10N	Panasonic	EXB-D10C470J
22	1	R28	100R	RES 100 OHM 1% 1/16W 0402	modules:R_0402_1005Metric	Stackpole	RMCF0402FT100R
23	6	R29,R30,R31,R32,R33,R34	12K	RES 12K OHM 1% 1/16W 0402	modules:R_0402_1005Metric	Stackpole	RMCF0402FT12K0
24	4	R35,R36,R37,R38	3K57	RES 100K OHM 5% 1/16W 0402	modules:R_0402_1005Metric	Stackpole	RMCF0402JT100K
25	2	R39,R40	22R	RES 22 OHM 1% 1/16W 0402	modules:R_0402_1005Metric	Stackpole	RMCF0402FT22R0
26	1	R42	1M	RES 1M OHM 1% 1/16W 0402	modules:R_0402_1005Metric	Stackpole	RMCF0402FT1M00
27	1	R43	8K06	RES 8.06K OHM 1% 1/16W 0402	modules:R_0402_1005Metric	Stackpole	RMCF0402FT8K06
28	1	R44	6K49	RES 6.49K OHM 1% 1/16W 0402	modules:R_0402_1005Metric	Stackpole	RMCF0402FT6K49
29	1	R48	30K	RES 30K OHM 1% 1/16W 0402	modules:R_0402_1005Metric	Stackpole	RMCF0402FT30K0
30	4	R49,R50,R51,R52	20K	RES 20K OHM 1% 1/16W 0402	modules:R_0402_1005Metric	Stackpole	RMCF0402FT20K0
31	1	U1	T85F484XX	EFINIX T85 FPGA	modules:T85F484-LFBGA	Efinix	T85F484XX
32	1	U2	W25Q128JVPIQ	IC FLASH 128MBIT SPI/QUAD 8WSON	modules:W25Q128JVPIQ TR	Winbond	W25Q128JVPIQ
33	1	U3	MIC803_SC-70	IC SUPERVISOR 1 CHANNEL SC70-3	modules:SC-70	Microchip	MIC803-31D2VC3-TR
34	1	U4	MT52L256M32D1PF-107_WT-B	IC DRAM 8GBIT 933MHZ 178FBGA	modules:BGA178_MT52L256_MRN	Micron Technology	MT52L256M32D1PF-107 WT:B TR
35	1	U5	ZL30270LDG1S	6-OUTPUT CLOCK GENERATOR (APLL-O	modules:MICROCHIP_VQFN48_MAC_MCH	Microchip	ZL30270LDG1S
36	1	U6	74AXP1T45GWH	IC XLTR VL BIDIR 6-TSSOP	modules:NEXPERIA_SC-88-SOT363_NEX	Nexperia	74AXP1T45GWH
37	1	U7	USB3343-CP-TR	IC TRANSCEIVER 1/1 24QFN	modules:MICROCHIP_USB3343_CP_QFN24_4X4MC_MCH	Microchip	USB3343-CP-TR
38	1	U8	KSZ8081RNACA-TR	IC TRANSCEIVER FULL 1/1 24QFN	modules:MICROCHIP_KSZ8081RNA_QFN24_4X4MC_MCH	Microchip	KSZ8081RNACA-TR
39	1	U9	MPM54322GPB-0000	16V, 3A, Dual-Output Power Module with I2C Interface	modules:MPS_ECLGA	Monolithic Power Systems	MPM54322GPB-0000
40	1	U10	LP2998MRX/NOPB	IC REG CONV DDR 1OUT 8SOPWRPAD	modules:LP2998MRX_SOIC127P620X168-9N	Texas Instruments	LP2998MRX/NOPB
41	1	X1	50MHz	CRYSTAL 50.000 MHZ 8 PF SMD	modules:XTAL_ECS-250-18-36-AGM-TR	ECS	ECS-500-8-33B-CTN-TR
42	1	X2	26MHz	CRYSTAL 26.0000MHZ 18PF SMD	modules:ABRACON_ABM8-26.000MHZ-D1G-T	Citizen Finedevice	CS325S26000000ABJT

XLSOM
XLSOM, llc
Palm Bay
FL 32907

Title: BOM 3301-05

Size: USLetter | Doc#: S330102-A-E | Rev: A

Date: 2025-08-07 | Sheet: 11/13

Copyright 2025 © XLSOM,llc All Rights Reserved

XLSOM

Doc Title:	XLM3301 FPGA Module
Doc Type:	BOM
PN:	3302-05
Revision:	A
Date:	25/08/07
Doc#:	B3302-05-A-E

Item	Qty	Reference	Value	Description	Footprint	Mfr	PN
1	24	C1,C4,C13,C14,C15,C38,C39,C42,C45,C48,C53,C54,C59,C60,C65,C66,C71,C72,C77,C78,C79,C80,C81,C82	1u	CAP CER 1UF 6.3V X5R 0402	modules:C_0402_1005Metric	KEMET	C0402C105K9PACTU
2	70	C2,C3,C5,C6,C7,C8,C9,C10,C11,C12,C16,C34,C35,C36,C37,C40,C41,C43,C44,C46,C47,C49,C50,C51,C52,C55,C56,C57,C58,C61,C62,C63,C64,C67,C68,C69,C70,C73,C74,C75,C76,C83,C84,C85,C86,C87,C88,C90,C92,C93,C94,C95,C98,C100,C101,C102,C104,C113,C114,C115,C116,C117,C118,C120,C121,C122,C123,C124,C125,C126	100n	CAP CER 0.1UF 16V X7R 0402	modules:C_0402_1005Metric	Walsin Technology Corp.	0402B104K160CT
3	8	C17,C18,C19,C20,C99,C111,C112,C119	4u7	CAP CER 4.7UF 6.3V X5R 0402	modules:C_0402_1005Metric	Murata	GRM155R60J475ME87D
4	10	C21,C22,C23,C24,C25,C26,C27,C28,C29,C33	470n	CAP CER 0.47UF 6.3V X5R 0402	modules:C_0402_1005Metric	Murata	GRM155R60J474KE19D
5	3	C30,C31,C32	47n	CAP CER 0.047UF 6.3V X5R 0402	modules:C_0402_1005Metric	Murata	GRM155R60J473KA01D
6	2	C89,C91	33p	CAP CER 33PF 50V C0G/NP0 0402	modules:C_0402_1005Metric	Murata	GRM1555C1H330JA01D
7	2	C96,C97	22p	CAP CER 22PF 50V C0G/NP0 0402	modules:C_0402_1005Metric	Murata	GCM1555C1H220FA16D
8	3	C103,C105,C106	22u	CAP CER 22UF 6.3V X5R 0402	modules:C_0402_1005Metric	Murata	GRM158R60J226ME01D
9	5	C107,C108,C109,C110,C127	47u	CAP CER 47UF 6.3V X5R 0603	modules:C_0603_1608Metric	Murata	GRM188R60J476ME15D
10	1	D1	B1811URO-20D000113U1930	LED RED DIFFUSED SMD	modules:LED_0402_1005Metric_A	Harvatek	B1811URO-20D000113U1930
11	3	D2,D3,D4	B2841NG--05D000514U1930	LED GREEN CLEAR SMD	modules:LED_0402_1005Metric_A	Harvatek	B2841NG--05D000514U1930
12	6	FB1,FB2,FB3,FB4,FB5,FB6	120R @100M	FERRITE BEAD 120 OHM 0402 1LN	modules:L_0402_1005Metric	Murata	BLM15PX121SN1D
13	1	FB7	33R @100M	FERRITE BEAD 33 OHM 0402 1LN	modules:L_0402_1005Metric	Murata	BLM15PX330SN1D
14	4	J1,J2,J3,J4	DF40C-100DP-0.4V51	CONN PLUG 100POS SMD GOLD	modules:HIROSE_DF40C-100DP-0.4V51	Hirose	DF40C-100DP-0.4V(51)
15	1	Q1	SSM6N35AFE_LF	MOSFET 2N-CH 20V 0.25A ES6	modules:SSM6N35AFE_LF_ES6_TOS	Toshiba Semiconductor	SSM6N35AFE,LF
16	1	Q2	NTA7002NT1G	MOSFET N-CH 30V 154MA SC75	modules:NTA7002NT1G_SOT-416_1P65X0P9_ONS	Onsemi	NTA7002NT1G
17	22	R1,R2,R3,R4,R5,R6,R7,R8,R9,R10,R11,R12,R14,R15,R16,R17,R18,R19,R41,R45,R46,R47	10K	RES 10K OHM 1% 1/16W 0402	modules:R_0402_1005Metric	Stackpole	RMCF0402FT10K0
18	1	R13	324K	RES 324K OHM 1% 1/16W 0402	modules:R_0402_1005Metric	Stackpole	RMCF0402FT324K
19	4	R20,R21,R22,R23	220R	RES 220 OHM 5% 1/16W 0402	modules:R_0402_1005Metric	Stackpole	RMCF0402JT220R
20	2	R24,R27	240R	RES 240 OHM 1% 1/16W 0402	modules:R_0402_1005Metric	Stackpole	RMCF0402FT240R
21	2	R25,R26	EXB-D10C470J	RES ARRAY 8 RES 47 OHM 1206	modules:RNET_PAN_RESCAV63P320X160X65-10N	Panasonic	EXB-D10C470J
22	1	R28	100R	RES 100 OHM 1% 1/16W 0402	modules:R_0402_1005Metric	Stackpole	RMCF0402FT100R
23	6	R29,R30,R31,R32,R33,R34	12K	RES 12K OHM 1% 1/16W 0402	modules:R_0402_1005Metric	Stackpole	RMCF0402FT12K0
24	4	R35,R36,R37,R38	3K57	RES 100K OHM 5% 1/16W 0402	modules:R_0402_1005Metric	Stackpole	RMCF0402JT100K
25	2	R39,R40	22R	RES 22 OHM 1% 1/16W 0402	modules:R_0402_1005Metric	Stackpole	RMCF0402FT22R0
26	1	R42	1M	RES 1M OHM 1% 1/16W 0402	modules:R_0402_1005Metric	Stackpole	RMCF0402FT1M00
27	1	R43	8K06	RES 8.06K OHM 1% 1/16W 0402	modules:R_0402_1005Metric	Stackpole	RMCF0402FT8K06
28	1	R44	6K49	RES 6.49K OHM 1% 1/16W 0402	modules:R_0402_1005Metric	Stackpole	RMCF0402FT6K49
29	1	R48	30K	RES 30K OHM 1% 1/16W 0402	modules:R_0402_1005Metric	Stackpole	RMCF0402FT30K0
30	4	R49,R50,R51,R52	20K	RES 20K OHM 1% 1/16W 0402	modules:R_0402_1005Metric	Stackpole	RMCF0402FT20K0
31	1	U1	T120F484XX	EFINIX T120 FPGA	modules:T120F484-LFBGA	Efinix	T120F484XX
32	1	U2	W25Q128JVPIQ	IC FLASH 128MBIT SPI/QUAD 8WSON	modules:W25Q128JVPIQ TR	Winbond	W25Q128JVPIQ
33	1	U3	MIC803_SC-70	IC SUPERVISOR 1 CHANNEL SC70-3	modules:SC-70	Microchip	MIC803-31D2VC3-TR
34	1	U4	MT52L256M32D1PF-107_WT-B	IC DRAM 8GBIT 933MHZ 178FBGA	modules:BGA178_MT52L256_MRN	Micron Technology	MT52L256M32D1PF-107 WT:B TR
35	1	U5	ZL30270LDG1S	6-OUTPUT CLOCK GENERATOR (APLL-O	modules:MICROCHIP_VQFN48_MAC_MCH	Microchip	ZL30270LDG1S
36	1	U6	74AXP1T45GWH	IC XLTR VL BIDIR 6-TSSOP	modules:NEXPERIA_SC-88-SOT363_NEX	Nexperia	74AXP1T45GWH
37	1	U7	USB3343-CP-TR	IC TRANSCEIVER 1/1 24QFN	modules:MICROCHIP_USB3343_CP_QFN24_4X4MC_MCH	Microchip	USB3343-CP-TR
38	1	U8	KSZ8081RNACA-TR	IC TRANSCEIVER FULL 1/1 24QFN	modules:MICROCHIP_KSZ8081RNA_QFN24_4X4MC_MCH	Microchip	KSZ8081RNACA-TR
39	1	U9	MPM54322GPB-0000	16V, 3A, Dual-Output Power Module with I2C Interface	modules:MPS_ECLGA	Monolithic Power Systems	MPM54322GPB-0000
40	1	U10	LP2998MRX/NOPB	IC REG CONV DDR 1OUT 8SOPWRPAD	modules:LP2998MRX_SOIC127P620X168-9N	Texas Instruments	LP2998MRX/NOPB
41	1	X1	50MHz	CRYSTAL 50.000 MHZ 8 PF SMD	modules:XTAL_ECS-250-18-36-AGM-TR	ECS	ECS-500-8-33B-CTN-TR
42	1	X2	26MHz	CRYSTAL 26.0000MHZ 18PF SMD	modules:ABRACON_ABM8-26.000MHZ-D1G-T	Citizen Finedevice	CS325S26000000ABJT

XLSOM
XLSOM, llc
Palm Bay
FL 32907

Title: BOM 3302-05

Size: USLetter	Doc#: S330102-A-E	Rev: A
Date: 2025-08-07	Sheet: 12/13	

Copyright 2025 © XLSOM,llc All Rights Reserved

REVISION HISTORY					
DRAWN	REV	SHEET	ZONE	DESCRIPTION	DATE
CRC	A	ALL	ALL	PRE-RELEASE	03/24/25
CRC	A	8,9	ALL	FIX CRYSTALS, USB-ID, UPDATED TITLEBLOCK/REV BLOCK	08/07/25

FEATURE SET

CONFIG 1 - T85

XLM3301-01 - BREAKOUT ONLY
XLM3301-02 - MEMORY
XLM3301-03 - MEMORY/USB
XLM3301-04 - MEMORY/ETHERNET
XLM3301-05 - MEMORY/USB/ETHERNET

CONFIG 2 - T120

XLM3302-01 - BREAKOUT ONLY
XLM3302-02 - MEMORY
XLM3302-03 - MEMORY/USB
XLM3302-04 - MEMORY/ETHERNET
XLM3302-05 - MEMORY/USB/ETHERNET

All material must comply with:

1. The requirements of the European Union RoHS 2 Directive 2017/2102 (Amendment to 2011/65/EU) with no exceptions unless authorized.

2. The requirements of EC 1907/2006 and not contain any of the Substances of Very High Concern (SVHC) listed under the latest REACH requirements. (Amendments EU 2017/999, EU 2017/1510, EU 2018/35).

No changes to XLSOM,llc. bill of materials is allowed unless approved in writing by XLSOM,llc.
These changes will be maintained in the document revision history via ECN.

FAB NOTES

BOARD LOGO

XLSOM
XLSOM, llc
Palm Bay
FL 32907

Title: REVISION / NOTES

Size: USLetter	Doc#: S330102-A-E	Rev: A
Date: 2025-08-07	Sheet: 13/13	

Copyright 2025 © XLSOM,llc All Rights Reserved