ALL SPORT® 5500 SERIES CONTROL CONSOLE

OPERATION MANUAL

P1389

ED-16809
Rev 9
9 February 2018

201 Daktronics Drive
Brookings, SD 57006-5128
www.daktronics.com/support
800.325.8766

DAKTRONICS

Copyright © 2006-2018
All rights reserved. While every precaution has been taken in the preparation of this manual, the publisher assumes no responsibility for errors or omissions. No part of this book covered by the copyrights hereon may be reproduced or copied in any form or by any means—graphic, electronic, or mechanical, including photocopying, taping, or information storage and retrieval systems—without written permission of the publisher.
Daktronics trademarks are property of Daktronics, Inc. All other trademarks are property of their respective companies.

Table of Contents

1 Introduction 1

Important Safeguards 1

Specifications Label 2

Resources 2

Console Revision History 2

Daktronics Exchange and Repair & Return Programs 2

Exchange Program 2

Repair & Return Program 3

Daktronics Warranty & Limitation of Liability 3

2 Basic Operation 4

Console Operation 4

Sport Inserts 5

Start Up 6

Standard Keys 6

Start 6

Stop 6

Enter/Yes 6

Clear/No 7

Edit 7

Menu 7

Set Main Clock 7

Count Up/Down 8

Auto Horn 9

Manual Horn 9

Remote Start/Stop Controls 9

Main Clock Control 9

Shot Clock Control 9

Setting Radio Channels 10

Single Controller System 11

Multiple Controller System with Single Broadcast Group 12

Multiple Controller with Multiple Broadcast Groups 13

Menu 14

New Game 14

New Code 15

Dimming Menu 15

Display Menu 15

Color Menu 16

Time of Day 17

Switch Output 18

General Multi-Purpose Timer 18

Standard Keys 18

Segment Timer 18

Team Name Entry 19

WIDTH 19

HEIGHT 19

FONT 19

3 Segment Timer Operation 20

Segment Timer Overview 20

Accessing Segment Timer 20

Accessing 2-Digit or 6-Digit Display Segment Timer 21

Segment Timer Keys 21

Segment Number & Time 21

First Segment 21

Last Segment 22

Interval Time 22

Display Interval 22

Copy Range 22

Auto Stop 23

Reset to First 23

Reset Current Segment 23

Current Segment 23

Edit 23

Current Segment 23

Menu 23

New Code 24

Warning Time 24

Dimming Menu 24

Default Settings 24

4 Basketball Operation 25

Basketball Keys 25

Set Shot Time 25

Recall Shot Time 26

Time Out On/Off 26

Blank Player Foul 26

Period +1 27

Time Out 27

Score (+1/+2/+3/-1) 27

Team Fouls (+1/-1) 28

Bonus 29

Possession 29

Table of Contents

In Game/Out of Game 29
Delete Player....29
Player....29
Individual Substitution 30
Mass Substitution 31
Edit....31
Time Out 31
Score (+1/+2/+3/-1) 32
Team Fouls (+1/-1) 32
Period +1 32
Time Out On/Off....32
Menu 33
New Game....33
New Code 33
Dimming Menu 33
Home Roster, Guest Roster 33
Display Menu 34
Color Menu 34
Time of Day 34
Edit Settings 35
Number of Periods....35
Main Clock....35
Shot Clock....36
Time Outs....36
Team Score 37
Team Fouls 37
Select Captions 38
Select Team Foul Display....38
Score by Quarter 38
Shot Horn Control....38
Light Control....38
Switch Output....39
Default Settings 39
5 Volleyball Operation....40
Volleyball Keys 40
Time Out On/Off....40
Time Out 41
Match Number +1, Sets +1 41
Score (+1/-1)....41
Sets Won +1, Subs +1....42
Aces +1, Kills +1, Blocks +1, Digs +1 ...42
Serve....42
In Game/Out of Game 43
Delete Player....43
Player....43
Individual Substitution 44
Mass Substitution 45
Edit....45
Time Out 45
Score (+1/-1)....46
Match Number +1, Sets +1 46
Sets Won +1, Subs +1....46
Aces +1, Kills +1, Blocks +1, Digs +1 ...46
Time Out On/Off....46
Menu 47
New Game....47
New Code 47
Dimming Menu 47
Home Roster, Guest Roster 47
Display Menu 49
Color Menu 49
Time of Day 49
Edit Settings 49
Main Clock....49
Time Outs....49
Team Stats 50
User Def 1 & User Def 2 50
Select Captions 51
Shot Horn Control....51
Light Control....51
Switch Output....51
Default Settings 52
6 Wrestling Operation....53
Wrestling Keys....53
Match Number +1 53
Period +1 53
Set Main Clock (Period Times) 54
Home Advantage, Guest Advantage, Stop Advantage Clock....54
Team Score (+1/-1) 55
Match Score (+1/+2/+3/-1)....55
Start/Stop Injury Time 55
Reset Match 56
Start/Stop Blood Time....56

Table of Contents

Start/Stop Recovery Time 57
Edit 57
Home Advantage 57
Guest Advantage 57
Blood Time 58
Injury Time 58
Match Number, Period, Team Score, Match Score 58
Menu 58
New Game 58
New Code 58
Dimming Menu 59
Home Roster, Guest Roster 59
Weight Class 60
Display Menu 60
Color Menu 60
Time of Day 60
Edit Settings 60
Main Clock 60
Blood/Injury Time 61
Recovery Time 61
Select Captions 62
Weight Class 62
Display Lines for Weight Class 62
Display Team Score 62
Shot Horn Control 62
Light Control 63
Switch Output 63
Default Settings 63

A Reference Drawings 65

B Sport Inserts 77

C Sport Code Numbers 85

D Quick Reference 87

All Sport 5500 Standard Keys 87
Segment Timer 88
Basketball 89
Volleyball 90
Wrestling 91

E Supplementary Documents 93

F Daktronics Warranty and Limitation of Liability 99

This page intentionally left blank.

1 Introduction

This manual explains the operation of All Sport® 5500 series control consoles. For additional information regarding the safety, installation, operation, or service of this system, refer to the telephone numbers listed in **Daktronics Exchange and Repair & Return Programs (p. 2)**.

Important Safeguards

- **Read and understand all instructions, both general and for specific sports.**
- **Always turn off and/or unplug the control equipment when it is not in use. Never yank the power cord to pull the plug from the outlet. Grasp the plug and pull to disconnect.**
- **Do not drop the control console or allow it to get wet.**
- **This device shall not be exposed to dripping or splashing, and no objects filled with liquid shall be placed upon it.**

  WARNING! To reduce the risk of fire or electric shock, do not expose this device to rain or moisture.
- **Console may include internal battery backup, or external battery pack.**

  CAUTION! DANGER OF EXPLOSION IF BATTERY IS INCORRECTLY REPLACED. REPLACE ONLY WITH THE SAME OR EQUIVALENT TYPE.

  WARNING! Do not expose batteries to excessive heat, such as direct sunlight or fire.
- **Do not let the power cord touch hot surfaces or hang over the edge of a table that would damage or cut the cord.**
- **If an extension cord is necessary, use a three-pronged, polarized cord. Arrange the cord with care so that it will not be tripped over or pulled out.**
- **Before using an extension cord, inspect the cable thoroughly and verify its compliance with the local electric codes.**
- **Do not disassemble control equipment or electronic controls of the display; failure to follow this safeguard will make the warranty null and void.**
- **Inspect console for shipping damage such as rattles and dents, and verify that all equipment is included as itemized on the packing slip. Immediately report any problems to Daktronics; save all packing materials if exchange is necessary.**

All Sport consoles receive external power through a standard 8' (2.44 m) long three-pronged power cord plugged into a 120 VAC grounded outlet. The outlet shall be installed near the console and easily accessible. Contact Daktronics for information on running an All Sport console via optional battery power pack.

> **Note:** The console features an internal time delay 1/8 amp, 250 V fuse. In the unlikely event the fuse needs to be replaced, contact Daktronics Customer Service.

Specifications Label

Power specifications as well as product assembly information can be found on the rear of the console. When calling Daktronics customer service, please have the assembly number and the date manufactured available to ensure the request is serviced as quickly as possible.

Resources

Figure 1 illustrates a Daktronics drawing label. This manual refers to drawings by listing the last set of digits. In the example, the drawing would be referred to as **DWG-1007804**. All references to drawing numbers, appendices, figures, or other manuals are presented in bold typeface. Any drawings referenced in a particular section are listed at the beginning of it as shown below:

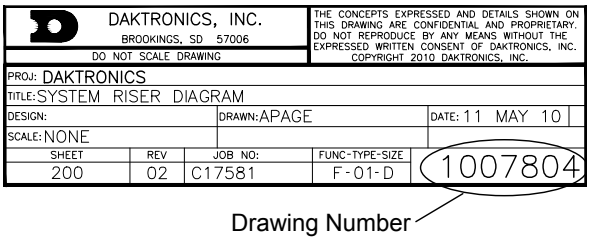

Figure 1: *Drawing Label*

Reference Drawing:

System Riser Diagram **DWG-1007804**

Daktronics identifies manuals by the DD or ED number located on the cover page.

Console Revision History

For a complete history of revisions to the console firmware, refer to **All Sport & OmniSport Revision Histories (DD3679410)**, available online at www.daktronics.com/manuals.

Daktronics Exchange and Repair & Return Programs

Exchange Program

The Daktronics Exchange Program is a service for quickly replacing key components in need of repair. If a component fails, Daktronics sends a replacement part to the customer who, in turn, returns the failed component to Daktronics. This decreases equipment downtime. Customers who follow the program guidelines explained below will receive this service.

Before contacting Daktronics, identify these important numbers:

Assembly Number: _____

Job/Contract Number: _____

Date Manufactured/Installed: _____

Daktronics Customer ID Number: _____

To participate in the Exchange Program, follow these steps:

1. **Call Daktronics Customer Service.**

Market Description	Customer Service Number
Schools (including community/junior colleges), religious organizations, municipal clubs, and community centers	877-605-1115 Fax: 605-697-4444
Universities and professional sporting events, live events for auditoriums, and arenas	866-343-6018 Fax: 605-697-4444

2. **When the new exchange part is received, mail the old part to Daktronics.**

   If the replacement part fixes the problem, send in the problem part being replaced.

   a. Package the old part in the same shipping materials in which the replacement part arrived.

   b. Fill out and attach the enclosed UPS shipping document.

   c. Ship the part to Daktronics.

3. **The defective or unused parts must be returned to Daktronics within 5 weeks of initial order shipment.**

   If any part is not returned within five (5) weeks, a non-refundable invoice will be presented to the customer for the costs of replenishing the exchange parts inventory with a new part. Daktronics reserves the right to refuse parts that have been damaged due to acts of nature or causes other than normal wear and tear.

Repair & Return Program

For items not subject to exchange, Daktronics offers a Repair & Return Program. To send a part for repair, follow these steps:

1. **Call or fax Daktronics Customer Service.**

   Refer to the appropriate number in the chart on the previous page.

2. **Receive a case number before shipping.**

   This expedites repair of the part.

3. **Package and pad the item carefully to prevent damage during shipment.**

   Electronic components, such as printed circuit boards, should be placed in an antistatic bag before boxing. Daktronics does not recommend using packing peanuts when shipping.

4. **Enclose:**

   - name
   - address
   - phone number
   - the case number
   - a clear description of symptoms

5. **Ship to:**

   Daktronics Customer Service

   [Case #]

   201 Daktronics Drive, Dock E

   Brookings, SD 57006

Daktronics Warranty & Limitation of Liability

The Daktronics Warranty & Limitation of Liability is located at the end of this manual. The Warranty is independent of Extended Service agreements and is the authority in matters of service, repair, and display operation.

2 Basic Operation

Console Operation

The console face consists of a 2-line by 16-character liquid crystal display (LCD), number/menu keypads, horn/clock controls with LED status indicators, and an area for a sport-specific insert. Refer to **Figure 2** to locate these components on the control console face.

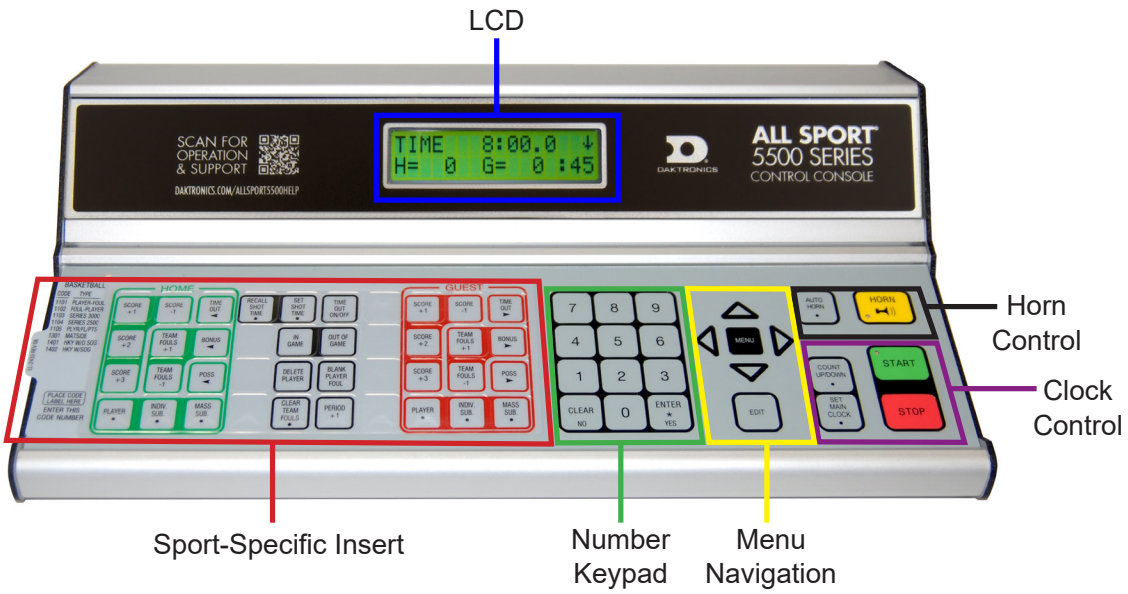

Figure 2: *All Sport 5500 Layout*

In most cases, the top line of the LCD shows the main clock time, direction the clock is counting, and when the main horn is sounding, while the bottom line typically shows the HOME and GUEST team scores.

The standard fixed keys and functions on the right side of the console are explained in **Standard Keys (p. 6)**. All of the keys that pertain to a specific sport code insert are explained in detail in their respective sport section.

In addition, Quick References and Menu Flowcharts for the Standard Keys and many of the more common individual sports are provided in **Appendix D**.

Throughout this manual, the names or letters of keys on the keypad are enclosed in angle brackets (such as **<ENTER>**).

Sport Inserts

Sport inserts allow one console to control multiple sports. Select the proper insert from the chart below and slide it into the insert opening on the left side of the console until it stops. To remove a sport insert, pull on the tab that extends from the left side of the console.

If an insert is lost or damaged, a printed copy of the insert drawing from **Appendix B** may be used until a replacement can be ordered. Print this page (if viewing digital copy) and write the code number in the following table for all applicable sports.

If the code number for a scoreboard is unknown, refer to **Appendix C**. If the model number of a scoreboard is unknown, refer to the documentation provided with the scoreboard.

Sport	Insert Number	Number Code
Basketball	LL-2433	
Segment Timer	LL-2475	Not applicable
Volleyball	LL-2434	
Wrestling	LL-2435	

A sport insert identifies the keys required for normal operation of a specific sport. In most cases, pressing a key immediately changes the scoreboard. Keys that require entry of additional information are marked by a dot. This additional information is usually a number followed by the **<ENTER>** key.

Keys with arrows activate an indicator (possession, bonus, etc.) on the scoreboard. The direction of the arrow selects the appropriate team (home or guest).

Some keys are labeled **+1**, **+2**, or **+3**. By pressing one of these keys once, the corresponding field on the scoreboard (such as score or period) "increments", or increases, by the amount printed on the key. A key with **-1** "decrements", or decreases, by one.

On most inserts, certain keys have been grouped together under the heading **Home** or **Guest**. These keys are **team** keys and work the same for both teams. They affect the statistics only for that one team. Keys not under one of these headings are **game** keys. They are general keys for the progress of the game (such as period or quarter). Other keys may be grouped in a similar way to emphasize that they work together.

Start Up

Use the switch on the back of the console to turn it on, then follow the LCD screens:

Display	Action
AS-5500 VX.X.X ED-16411	The console performs a self-test when it is powered on. During the self-test, a message displays the version of the standard software loaded in the console. V = version number and revision number ED = standard software number
PREV CODE NNNN RESUME GAME? NNNN = last code selected	When the self-test completes, a prompt displays the code number for the last game played. This is useful when power to the console is lost during a game. Press **<YES>** to resume the last game stored in memory. The console is now ready for game operation. Press **<NO>** to start a new game or change to a different sport. The console will prompt for a new code number.
SELECT CODE CODE NNNN NNNN = current code	The **SELECT CODE** prompt lets the operator accept the last code selected (shown on the second line) or enter a new code. To accept the code shown, press **<ENTER>**. To select a new sport code: **1.** Get the code number from the sport insert or the section of the manual for that sport. **2.** Use the number keys to enter the new four-digit code. **3.** Press **<ENTER>**.
RADIO SETTINGS BCAST X CHAN YY X = last broadcast number YY = last channel number	If a new code is selected, and the radio option is installed, the console prompts for a broadcast group and channel. When Resume Game is used, the last selected settings are used. Press **<ENTER>** to accept the group and channel numbers, or press **<CLEAR>** to enter new numbers. Refer to **Setting Radio Channels (p. 10)** for more information.

Standard Keys

Start

<START> is used to start the main clock. The green LED on the **<START>** key is on while the main clock is running.

Stop

<STOP> is used to stop the main clock. The green LED on the **<START>** key is off while the main clock is stopped.

Enter/Yes

The **<ENTER/YES*>** key has two functions:

- Completes an action. As a reminder to press this key, an asterisk appears on the LCD.
- Serves as **<YES>** for input prompts (**Y**).

Clear/No

The **<CLEAR/NO>** key has two functions:

- Clears the LCD of numerical information.
- Serves as **<NO>** for input prompts (**N**).

The **<CLEAR/NO>** key also acts as an escape during data entry. The number of key presses to escape depends on the step in the entry process (flashing asterisk or not).

Example 1: The operator presses the **<SET MAIN CLOCK>** key to adjust the game time.

- If no number key has been pressed yet, press the **<CLEAR/NO>** key once to escape.
- If any number key has been pressed, the **<CLEAR/NO>** key must be pressed twice to escape; the first press blanks the data on the LCD, and the second press escapes.

Example 2: The operator presses **<EDIT>** followed by a **<SCORE>** key to change the score:

- The **<CLEAR/NO>** key must always be pressed twice to escape.

Edit

Press the **<EDIT>** key followed by one of the increment or decrement keys for the desired field on the scoreboard to modify. Then simply enter the new value to display and press **<ENTER>** to accept.

Menu

Press **<MENU>** to access general and sport-specific options. Use the up and down arrow keys to scroll through the menu list. Press **<MENU>** again at any time to return to the game in progress. Refer to **Menu (p. 14)** for more information.

Set Main Clock

Display	Action
MAIN CLOCK -SET CURR MM:SS.T * MM:SS.T = minutes, seconds, tenths of a second	After the main clock has been stopped, press **<SET MAIN CLOCK>** to display the current time of the main clock. To change the time, enter the desired value using the number pad, and then press **<ENTER>**. Press **<CLEAR>** twice to clear changes and return to the game.
MAIN CLOCK -EDIT PERIOD MM:SS * MM:SS = minutes, seconds	Press **<SET MAIN CLOCK>** two times to display the configured time for the main clock period length. To change the period length and set the main clock, enter the new time in minutes and seconds using the number pad, and then press **<ENTER>**. **Note:** Pressing **<ENTER>** to select the period time as the main clock setting will increment the current period number if the clock value was previously zero. Press **<CLEAR>** twice to clear changes and return to the game.

Display	Action
MAIN CLOCK -EDIT BREAK MM:SS * MM:SS = minutes, seconds	Press **<SET MAIN CLOCK>** three times to display the configured time for break length. To change the break length and set the main clock, enter the new time in minutes and seconds using the number pad, and then press **<ENTER>**. Press **<CLEAR>** twice to clear changes and return to the game.
MAIN CLOCK -EDIT OT MM:SS * MM:SS = minutes, seconds	Press **<SET MAIN CLOCK>** four times to display the configured time for overtime length. To change the overtime length and set the main clock, enter the new time in minutes and seconds using the number pad, and then press **<ENTER>**. Press **<CLEAR>** twice to clear changes and return to the game.
MAIN CLOCK -EDIT PRE MM:SS * MM:SS = minutes, seconds	Press **<SET MAIN CLOCK>** five times to display the configured time for pre-game length. To change the pre-game length and set the main clock, enter the new time in minutes and seconds using the number pad, and then press **<ENTER>**. Press **<CLEAR>** twice to clear changes and return to the game.
MAIN CLOCK -EDIT POST MM:SS * MM:SS = minutes, seconds	Press **<SET MAIN CLOCK>** six times to display the configured time for post-game length. To change the post-game length and set the main clock, enter the new time in minutes and seconds using the number pad, and then press **<ENTER>**. Press **<CLEAR>** twice to clear changes and return to the game.

Note: To blank the game time while keeping the rest of the scores and statistics visible: Press **<SET MAIN CLOCK>**, any number key, **<CLEAR>**, and then **<ENTER>**.

Count Up/Down

Display	Action
MAIN CLOCK- DOWN 1-UP 2-DOWN	After the main clock has been stopped, the direction of the clock can be set. Press **<1>** or **<2>** to select **UP** or **DOWN** (default). **Note:** The current direction of the main clock is shown on the top line of the LCD.

Auto Horn

Display	Action
AUTO HORN- ON 1-ON, 2-OFF	Press **<1>** to select ON (default), or press **<2>** to select OFF. The amber LED on the **<HORN>** key is on when the Auto Horn feature is enabled. The LED is off when the Auto Horn feature is disabled and the horn is in Manual mode.

Manual Horn

Press **<HORN>** to sound the main horn. The horn sounds as long as the key is pressed.

Remote Start/Stop Controls

The All Sport 5500 console lets additional operators control timing functions remotely using the Main Clock Start/Stop switch and the Shot Clock Start/Stop switch.

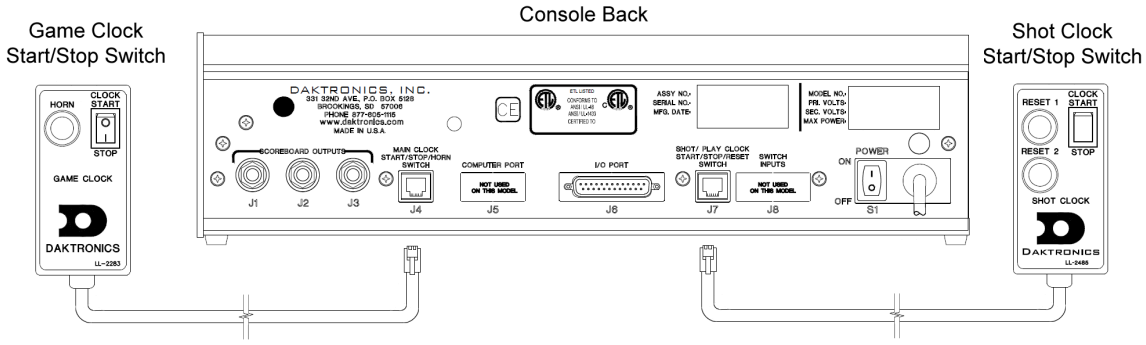

Figure 3: *Remote Start/Stop Switches*

Main Clock Control

The Main Clock Start/Stop switch plugs into **J4** on the back of the console (**Figure 3**). This unit has a rocker switch for clock start/stop and a button for horn. The horn button sounds the horn as long as the button is pressed.

Shot Clock Control

The Shot Clock Start/Stop switch plugs into **J7** on the back of the console (**Figure 3**). This unit has a rocker switch for Start/Stop and reset button(s). When a reset button is pressed, the shot clock timer is changed to the reset value and stops the timer from decrementing. The shot clock timer restarts when the reset button is released. In independent mode, the switch starts and stops the shot clock timer when pushed, but does not stop when the main clock is stopped. When in synchronized mode, the shot clock timer will stop and start with the main clock switches only if it is running in the beginning.

Refer to **Section 4: Basketball Operation (p. 25)** for sport-specific information about shot clock configurations.

Setting Radio Channels

Reference Drawings:

Channel Selection; Multiple Broadcast Group, Gen IV **DWG-203113**
Installation Details, Gen VI Channel Selection Guide **DWG-1109870**

The radio receiver units used in Daktronics scoreboards have a channel (CHAN) switch that can be set from 1–8. The receivers also have a broadcast group (BCAST) setting. The broadcast group defines a group of radio receivers that "listen" to the channel selected on the channel switch as well as "listen" for data sent out on their broadcast channel.

> **Note:** The number of available broadcast groups varies depending on the generation of radio receiver: Gen V receivers have 1–4, while Gen VI receivers have 1–8.

Each radio receiver will accept data sent from the broadcast channel of its respective broadcast group, as well as data sent from the "Master Broadcast" channel. This is selected when the console is set to BCAST 0 and CHAN 00.

In this type of system, the receiver unit at the scoreboard must have the channel switch set to a specific channel. The operator must know which channel is selected in the scoreboard. The operator must then enter the specific channel when prompted during console startup.

To determine the settings of a scoreboard, first power it down and shut off any radio-equipped consoles in the area. Next, power the scoreboard back up and watch for the radio settings. The settings will appear as "**bX CY**" where **X** is the current broadcast group, and **Y** is the current channel.

The settings are typically displayed in the clock digits or Home and Guest score digits, depending on the scoreboard model. Refer to **Figure 4**.

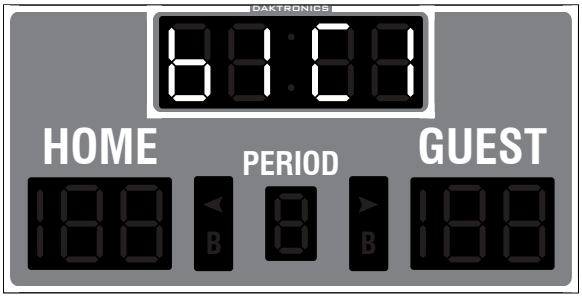

Figure 4: *Radio Settings in Clock Digits*

The console automatically detects when a radio transmitter is installed and will prompt the operator for transmitter settings after a valid sport code is entered.

> **Note:** If interference from a nearby Daktronics system is suspected, press **<CLEAR>** at the "RADIO SETTINGS" prompt to change the channel number.

There are three different radio scenarios that can be accommodated: a single controller system, a multiple controller system with a single broadcast group, and a multiple controller system with multiple broadcast groups. These scenarios are described on the following pages.

Single Controller System

In a single controller system (**Figure 5**), all radio receivers and all scoreboards receive signal from the same console. The default channel and broadcast group settings on the receiver are not typically modified. An example of this type of system is a gymnasium with a scoreboard on one or both end walls displaying the same information.

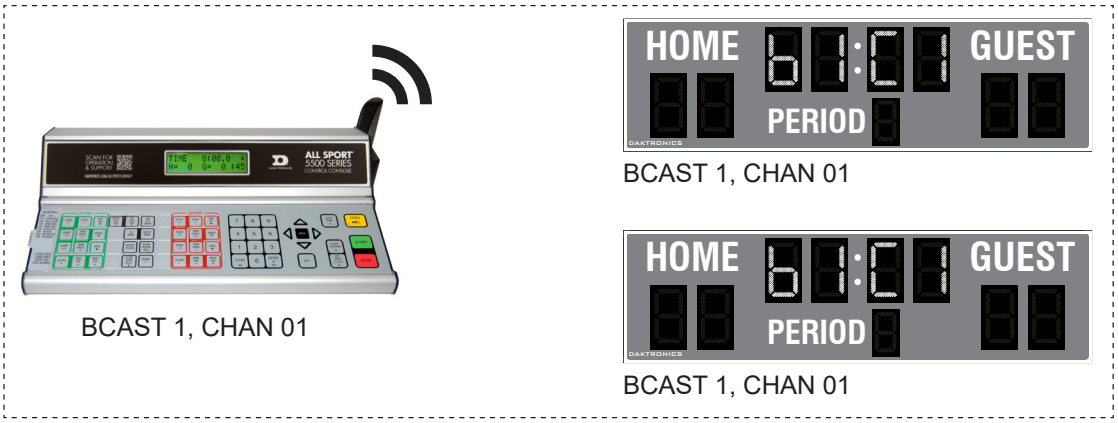

Figure 5: *Single Control Console*

Typically all single controller systems will use the default setting BCAST = 1, CHAN = 1. All radio receivers in the system must be set to the same values.

Display	Action

The LCD will toggle between these 2 screens:
 	
`RADIO SETTINGS`
`BCAST X  CHAN YY`
 	
`ENTER TO ACCEPT`
`CLEAR TO MODIFY`
 	
`BCAST GROUP X*`
`RADIO CHAN  YY`
 	
X = broadcast group number
YY = channel number
	The LCD shows the current radio settings along with a prompt to accept or modify these values.
	
	If the radio settings are correct press **<ENTER>**.
	
	If these values are incorrect, press **<CLEAR>**, and the LCD at bottom left is shown, allowing edit of the channel or broadcast group setting.
	
	Broadcast Group Setting
	[1] Use this setting for all single controller systems. Use the number keys to edit this value and press **<ENTER>** to accept. The asterisk will move to the channel setting.
	
	Channel Setting
	[1-8] Edit the channel number to the desired value and press **<ENTER>** to accept. The CHAN switch on the receiver must match this value.

Multiple Controller System with Single Broadcast Group

In a multiple controller system with a single broadcast group (**Figure 6**), there may be one console for each scoreboard and/or one master controller that can run every scoreboard at one time or take control of a specific scoreboard. An example of this type of system is a softball complex with individual scoreboards on several different fields.

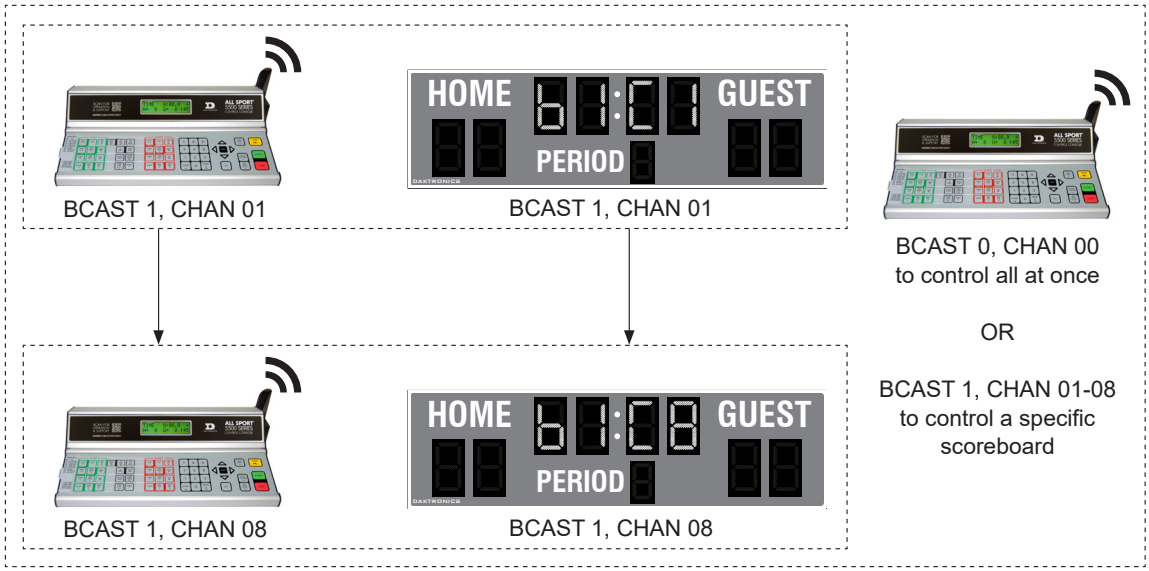

Figure 6: *Single Broadcast Group*

Multiple controller systems typically use Broadcast 1 and Channel 1 for the first controller and Channels 2-8 for all remaining controllers. All radio receivers in the system must be set to Broadcast 1 (BCAST 1).

Display	Action

The LCD will toggle between these 2 screens:
 	
`RADIO SETTINGS`
`BCAST X  CHAN YY`
 	
`ENTER TO ACCEPT`
`CLEAR TO MODIFY`
 	
`BCAST GROUP X*`
`RADIO CHAN  YY`
 	
X = broadcast group number
YY = channel number
	The LCD shows the current radio settings along with a prompt to accept or modify these values.
	
	If the radio settings are correct press **<ENTER>**.
	
	If these values are incorrect, press **<CLEAR>**, and the LCD at bottom left is shown, allowing edit of the channel or broadcast group setting.
	
	Broadcast Group Setting
	[1] Use this setting for all multiple controllers with single broadcast group setups. Use the number keys to edit this value and press **<ENTER>** to accept. The asterisk will move to the channel setting.
	
	Channel Setting
	[1-8] Edit the channel number to the desired value and press **<ENTER>** to accept. The CHAN switch on the receiver must match this value.

Multiple Controller with Multiple Broadcast Groups

In a multiple controller system with multiple broadcast groups (**Figure 7**), there are many consoles that control multiple scoreboards and/or scoreboard groups. The radio receiver inside the scoreboard is set to broadcast group 1–4 (Gen V) or 1–8 (Gen VI). By changing the console settings to the specific broadcast group address, a single console can control all scoreboards or specific groups of scoreboards. One example of this scenario is split court operation in basketball installations, where scoreboards are used to score multiple games at once, but can be grouped together to show one game if necessary.

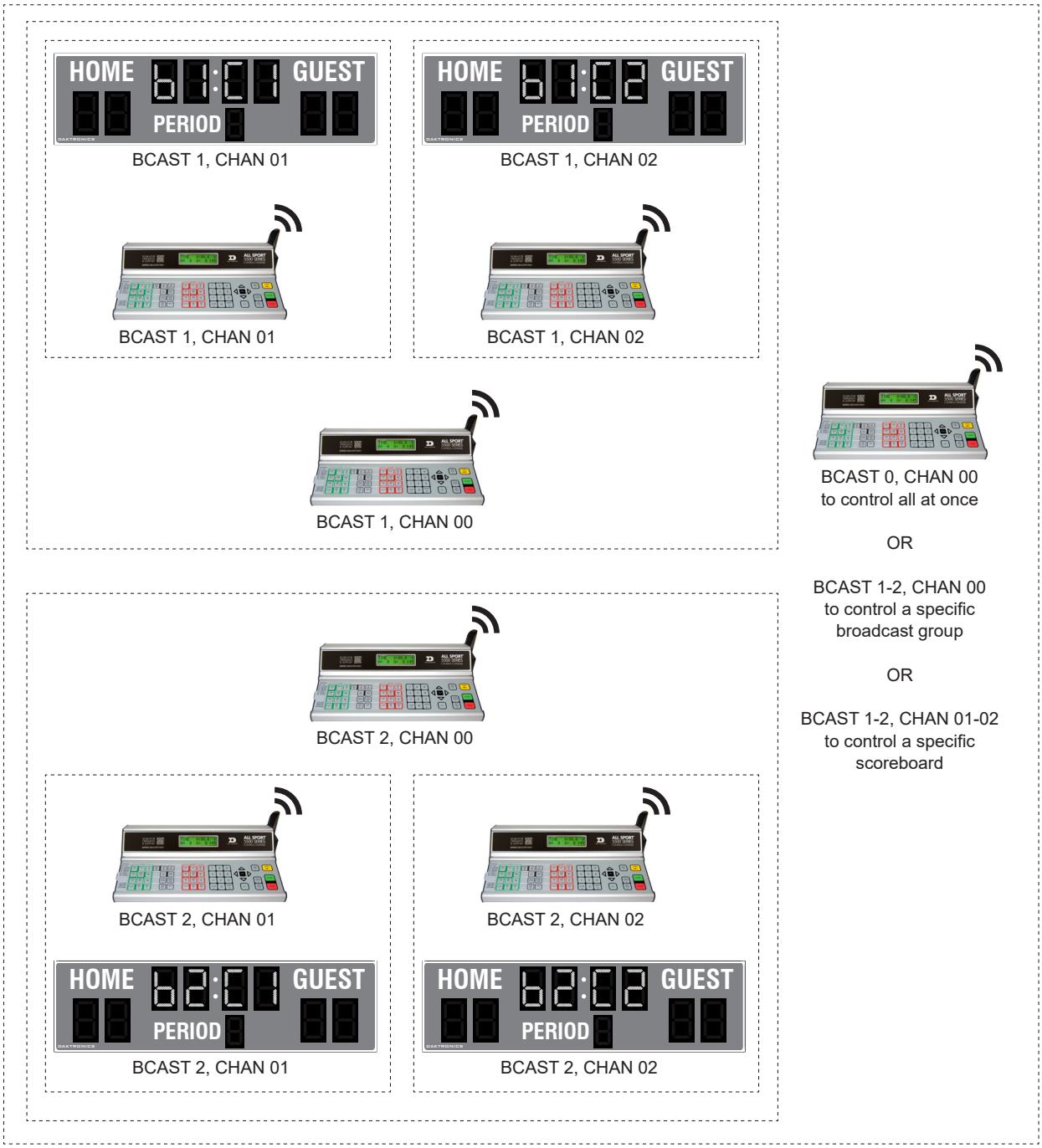

Figure 7: *Multiple Broadcast Group*

Typically, all multiple controller systems will use BCAST 1, CHAN 1 for the first controller in Broadcast Group 1 and BCAST 2, CHAN 1 for the first controller in Broadcast Group 2. All other consoles in a group are added sequentially.

<table>
<tr><th>Display</th><th>Action</th></tr>
<tr><td>The LCD will toggle between these 2 screens.

RADIO SETTINGS
BCAST X CHAN YY

ENTER TO ACCEPT
CLEAR TO MODIFY

BCAST GROUP X*
RADIO CHAN YY

X = broadcast group number
YY = channel number</td><td>The LCD shows the current radio settings along with a prompt to accept or modify these values.

If the radio settings are correct press <ENTER>.

If these values are incorrect, press <CLEAR>, and the LCD at bottom left is shown, allowing edit of the channel or broadcast group setting.

Use the number keys to enter the desired broadcast group and press <ENTER> to accept. The asterisk will move to the channel setting.

Edit the channel number to the desired value and press <ENTER> to accept.

<table>
<tr><th>Broadcast Group</th><th>Channel Setting</th><th>Control Scoreboards</th></tr>
<tr><td>0</td><td>0</td><td>All Scoreboards</td></tr>
<tr><td rowspan="2">1</td><td>0</td><td>All in BCAST Group 1</td></tr>
<tr><td>1-8</td><td>Set to corresponding BCAST 1 Channel</td></tr>
<tr><td>↓</td><td>↓</td><td>↓</td></tr>
<tr><td rowspan="2">8*</td><td>0</td><td>All in BCAST Group 8</td></tr>
<tr><td>1-8</td><td>Set to corresponding BCAST 8 Channel</td></tr>
</table>
* Gen V radio receivers have only 4 groups; also, on broadcast groups 2 and 4, only channels 1-4 may be used.</td></tr>
</table>

Menu

Press **<MENU>** to access general and sport-specific options. Use the up and down arrow keys to scroll through the menu list. Press **<MENU>** again at any time to return to the game in progress. Menu settings common to most sport modes are shown below. Refer to individual sport mode sections for additional menus and settings.

New Game

Display	Action
MENU- MAIN NEW GAME?	Press **<ENTER>** to clear all data for the current game in progress and begin a new game.

New Code

Display	Action
MENU- MAIN NEW CODE?	Press **<ENTER>** to switch to a different sport code through the **SELECT CODE** prompt. Refer to **Start Up (p. 6)** for more information on sport codes.

Dimming Menu

The **Dimming Menu** changes the brightness of the scoreboard.

Display	Action
MENU- DIMMING LEVEL(0-9): NN% NN = current setting NONE = **<0>** 50% = **<5>** 90% = **<1>** 40% = **<6>** 80% = **<2>** 30% = **<7>** 70% = **<3>** 20% = **<8>** 60% = **<4>** 10% = **<9>**	Press **<0>** (brightest) through **<9>** (dimmest) or use the left/right arrow keys to set the scoreboard digit dimming level.

Display Menu

Use the **Display Menu** to start and edit the segment timer, blank the scoreboard, enable/disable the clock captions, and more.

Display	Action
MENU- MAIN ENTER DISPLAY MENU?	Press **<ENTER>** to select the Display submenu.
MENU-DISPLAY RUN SEGMENT TIMER? EXIT GAME ARE YOU SURE?	Press **<ENTER>** twice to exit the sport code and run the segment timer function. **Note:** The clock must be stopped to access the segment timer. Insert the SEGMENT TIMER (LL-2475) insert and refer to **Section 3: Segment Timer Operation (p. 20)** for more information.
MENU- DISPLAY BLANK SCBD? PRESS ANY KEY TO RETURN TO GAME	Press **<ENTER>** to select the blank scoreboard feature. The scoreboard will go blank and wait for the operator to press any key to resume normal operation.
MENU-DISPLAY SYNC TO CHAN SYNC TO CHAN ON 1-ON, 2-OFF	Press **<ENTER>** to view or set the radio sync to channel setting. The LCD will show if the setting is ON or OFF. Press **<1>** to turn it on, or press **<2>** to turn it off. **Note:** This setting should remain **ON** unless instructed by Daktronics to turn it off.

Display	Action
MENU- DISPLAY CLOCK CAPTIONS CLOCK CAPTION- 1-ON, 2-OFF ON	Press **<ENTER>** to view or set the clock caption setting. The LCD will show if the setting is ON or OFF. Press **<1>** to turn it on, or press **<2>** to turn it off.
MENU- DISPLAY SET RTD OFFSET RTD OFFSET 0K 0 1=5 2=10 3=15	Press **<ENTER>** to set the RTD offset. The RTD offset is typically used when there are multiple consoles in the same area, and one or more matrix displays showing their information (for example, during a tournament). Press **<1>** to offset the RTD by 5000, **<2>** to offset by 10000, or **<3>** to offset by 15000. Press **<0>** to clear the offset.
MENU-DISPLAY RUN DOWNLOAD Y/N?	This menu is used to download and transfer field update files to certain scoreboard drivers. For more information, refer to **ED-18728** in **Appendix E**.

Color Menu

Use the Color Menu to select the color-changing settings for the clock and score digits.

Display	Action
MENU- MAIN ENTER COLOR MENU	Press **<ENTER>** to select the Color submenu.
COLOR MENU CLOCK COLOR CLOCK COLOR -ON 1-ON, 2-OFF ALERT TIME MM:SS* MM:SS = minutes, seconds CLOCK DEFAULT COLOR =GRN	Press **<ENTER>** to select the clock color selection. The current setting for clock color control will be shown as ON or OFF. Press **<1>** to set ON or **<2>** to set OFF. If set ON, the clock color will be green for RUN and red for STOP. The operator can set an alert time when the clock will go amber. Set the alert time to 0:00 if none is used. If the clock color control is set OFF, the operator can select a default color for the clock. Press the up or down arrow key to select a color.

Display	Action
COLOR MENU SCORE COLOR	Press **<ENTER>** to select the score color selection.
SCORE COLOR -ON 1-ON, 2-OFF	The current setting for score color control will be shown as ON or OFF. Press **<1>** to set ON or **<2>** to set OFF.
HIGH SCORE COLOR =GRN LOW SCORE COLOR =RED TIE SCORE COLOR =AMB	If set ON, the color of the score can be selected for the larger, smaller, and tied score. Press the up or down arrow key to select a color. Press **<ENTER>** when the desired color is shown.
HOME SCORE COLOR =GRN GUEST SCORE COLOR =RED	If set to OFF, the default color for HOME and GUEST scores can be selected. Press the up and down arrow key to select a color. Press **<ENTER>** when the desired color is shown.

Time of Day

Display	Action
MENU- MAIN SELECT TOD?	Press **<ENTER>** to select the Time of Day (TOD) submenu.
MENU-TIME OF DAY 1*12, 2-24 HOUR	Press **<1>** to display the time of day in 12 hour (default), or press **<2>** to display the time of day in 24 hour format.
MENU-TIME OF DAY TOD HH:MM:SS* HH:MM:SS = hours, minutes, seconds	Enter the time of day in hours, minutes, and seconds using the number pad, and then press **<ENTER>**.
MENU-TIME OF DAY 1*GAME 2-TOD MENU-TIME OF DAY BLANK GAME DATA?	Press **<1>** to display the game clock (default), or press **<2>** to display the time of day on the scoreboard clock digits. If **2–TOD** is selected, press **<ENTER>** to blank all game data on the scoreboard except for the Time of Day digits, or press **<CLEAR>** to leave the game data visible.

Switch Output

The All Sport 5500 console has a relay switch that can be used to control external devices. The switch can be configured to operate under different clock or horn conditions. The default setting is **1-CLOCK= 0**.

1. Press the number key (**<0>**, **<1>**, **<2>**, **<3>**) as a shortcut or use the left and right arrow keys to select the desired setting.
2. Press **<YES>** to select the new setting, or press **<NO>** to leave the switch setting as is.

The possible settings for the switch output are displayed below:

Display	Action
SWITCH OUTPUT=N 0-DISABLED? N = current setting	The switch remains open at all times and any external devices are disabled.
SWITCH OUTPUT=N 1-CLOCK =0? N = current setting	In count down mode, the switch closes when the main clock reaches zero and stays closed until a nonzero value is entered. In count up mode, the switch closes when the main clock reaches the proper period, break, or overtime length and opens when any other value is entered.
SWITCH OUTPUT=N 2-CLOCK =STOP? N = current setting	The switch closes when the main clock is stopped and opens when the main clock is running. External devices are disabled when the main clock is running.
SWITCH OUTPUT=N 3-MAIN HORN? N = current setting	The switch closes when the main horn sounds. This could be when Auto Horn is enabled and the main clock reaches zero or when **<HORN>** is pressed.

General Multi-Purpose Timer

There is no insert for the Multi-Purpose Timer codes. Code 99 is used to operate the multi-purpose timer.

The Multi-Purpose Timer is a general timer used for 2-, 4-, and 6-digit time displays. The timer will count up or down through hours, minutes, and seconds. The information will shift on the 2- and 4-digit displays to show the most significant time values as the time changes. The Multi-Purpose Timer code is also used as a Time-of-Day code by accessing the Time of Day Menu through the Menu key. The Segment Timer may also be accessed using the Menu key.

Standard Keys

The keys that are used by the multi-purpose timer are **<START>**, **<STOP>**, **<SET MAIN CLOCK>**, **<COUNT UP/DOWN>**, **<AUTO HORN>**, **<MANUAL HORN>** and **<MENU>**. The key functions are explained in more detail in **Standard Keys (p. 6)**.

Segment Timer

Refer to **Section 3: Segment Timer Operation (p. 20)** for details on accessing and operating the segment timer function.

Team Name Entry

Certain scoreboards may be equipped with Team Name Message Centers (TNMCs), LED matrix displays that show team names, abbreviations, or short messages.

The team name entry function is typically accessed by pressing the **<MENU>** key and navigating to the HOME or GUEST TEAM NAME option (refer to an individual sport section for more information).

The TEAM NAME insert (LL-2441) is used to enter the TNMC settings. For newer consoles, the Team Name insert is printed directly on the keypad; for older consoles; it will be necessary to swap the sport insert with a separate insert. The TEAM NAME insert has the following sections for controlling the appearance of the display:

WIDTH

Select the width (in pixels) of the TNMC from 16, 32, 48 or 64 columns. The default width is 48 columns long.

HEIGHT

Select the height (in pixels) of the TNMC from 7 or 8 rows. The default height is 8 rows high.

FONT

Select a Single Stroke or a Double Stroke (bold) font. The default font is single stroke. Each TNMC on a scoreboard (Home & Guest) may use different font settings to fit varying team name lengths.

The tables below show the width (in pixels) of every character for each font setting:

TNMC Font	A	B	C	D	E	F	G	H	I	J	K	L	M	N	O	P	Q	R	S	T	U	V	W	X	Y	Z
Single Stroke - Standard	4	4	4	4	4	4	4	4	3	4	4	4	5	4	4	4	5	4	4	5	4	5	5	5	5	4
Single Stroke - Alternate Narrow*	3	3	3	3	3	3	4	3	1	3	4	3	5	4	3	3	5	3	3	3	3	5	5	5	3	4
Double Stroke - Standard	6	6	6	6	6	6	6	6	4	6	6	6	7	6	6	6	7	6	6	6	6	7	7	7	6	6
Double Stroke - Alternate Narrow*	5	5	5	5	4	4	6	5	2	5	6	4	7	6	5	5	7	5	5	4	5	7	7	7	6	6

*To access Alternate Narrow fonts, press the **<SHIFT>** key before pressing a letter key. A lowercase letter is shown on the LCD to represent the Alternate Narrow characters.

TNMC Font	1	2	3	4	5	6	7	8	9	0	&	'	,	-	.
Single Stroke - Standard	3	4	4	5	4	4	4	4	4	4	5	2	2	3	1
Double Stroke - Standard	4	6	6	7	6	6	6	6	6	6	5	3	3	3	2

3 Segment Timer Operation

Sport Insert: LL-2475 (Code 100 is for the dedicated Segment Timer)

The Sport Insert drawing is located in **Appendix B**. The Quick Reference is located in **Appendix D**.

Reference Drawings:

Insert, Segment Timer **DWG-129357**

Refer to **Section 2: Basic Operation (p. 4)** for information on how to start up the console and use the sport insert.

If an insert is lost or damaged, a copy of the insert drawing can be used until a replacement arrives.

If the code number for a scoreboard is unknown, refer to **Appendix C**. If the scoreboard model number is unknown, refer to the documentation provided with the scoreboard.

Segment Timer Overview

The segment timer is a multi-function timing system and has multiple purposes. Operation of the segment timer is determined by 99 segments of pre-programmed length. The segment timer will count down starting at the segment number that is set as **First Segment**. When the first segment is completed, the timer will count the preset **Interval Time** and move on to the next segment. The timer will continue counting segments until the segment number that is set as **Last Segment** is complete. It then will reset to the segment saved as the **First Segment** and will either begin counting down or wait for the **<START>** key to be pressed depending on the **<AUTO STOP>** setting. Refer to **Auto Stop (p. 23)** to set the segment-stopping feature.

The **First Segment** and **Last Segment** values can be used to set up specific practice sessions. For example, the practice session for one sport could be programmed for 5 minute segments on segments 1-10 while another might use 10 minute segments on 11-20. Set the **First Segment** and **Last Segment** values to the desired segment numbers for the session and the console will count down each of the segments in order. It may also be set to either stop on the last segment or loop back to the first segment again based on the **<AUTO STOP>** setting.

The segment values will be saved when the console is turned off and will be the same values regardless of the sport that was used to access the segment timer.

Accessing Segment Timer

Turn on the console. Enter the sport code used for the scoreboard in use and press **<ENTER>**. A list of sport codes can be found in **Appendix C**.

The segment timer program is accessed through the main menu of each individual sport.

Display	Action
MENU- MAIN ENTER DISPLAY MENU? MENU-DISPLAY RUN SEGMENT TIMER? EXIT GAME ARE YOU SURE?	After the main clock has been stopped, press the **<MENU>** key and press the down or up arrows until the LCD at left is displayed. Press **<YES>** to enter the display menu. Press **<YES>** to exit the sport code and run the segment timer program. The console will prompt to press **<YES>** a second time to avoid accidental exit from the sport program. Refer to **Segment Timer Keys (p. 21)** for general segment timer operation instructions.

Accessing 2-Digit or 6-Digit Display Segment Timer

This code is only used for the two-digit or six-digit displays designed exclusively for segment timing. Enter code **100** after turning on the console to access the exclusive segment timer program. For scoreboards, enter the correct scoreboard code and use **<MENU>** to access the segment timer function.

Segment Timer Keys

Segment Number & Time

The **<SEG. NO. • TIME •>** key is used to edit the time of each segment. Select the segment to be edited, and enter the desired time as described below.

Display	Action
SEGMENT: NN * TIME EDIT NN = current setting SEGMENT: NN TIME EDIT MM:SS* NN = current setting MM:SS = minutes, seconds	Press **<SEG. NO. • TIME •>** to set individual segment times. Enter the segment to be edited using the keypad, and then press **<ENTER>**. Enter the time for the segment with the keypad. Press **<ENTER>** to accept the time and move to the next segment time. Press **<ENTER>** again to exit the function. Press the up or down arrow keys to move to the previous or next segment.

First Segment

This key sets the first segment in a range of segments to run when **<START>** is pressed.

Display	Action
FIRST SEGMENT NN* NN = current setting	Press **<FIRST SEGMENT •>** and enter the segment to be set as the first segment. Press **<ENTER>** to accept the time and exit the function. The console will be reset to the segment selected here when the **<RESET TO FIRST SEG>** key is pressed.

Last Segment

This key sets the last segment in a range of segments to run when **<START>** is pressed.

Display	Action
LAST SEGMENT NN*	Press **<LAST SEGMENT •>** and enter the segment to be set as the last segment. Press **<ENTER>** to accept the time and exit the function. After the segment set as the last segment is completed, the console will automatically reset to the segment saved as the first segment.
NN = current setting	

Interval Time

The interval time is the time between each segment. The interval time can be displayed on the Guest score digits using the **<DISPLAY INTERVAL>** key.

Display	Action
INTERVAL TIME: MM:SS*	Press **<INTERVAL TIME •>** to display the current value of interval time on the bottom line of the LCD. Edit the value of the interval time and press **<ENTER>**.
MM:SS = minutes, seconds	

Display Interval

This setting determines whether the interval count will be displayed on the scoreboard.

Display	Action
DISPLAY INTERVAL YES OR *NO?	Press **<DISPLAY INTERVAL>**. Press **<YES>** to display the interval time on the scoreboard. Press **<NO>** to disable interval time display. The interval time will be displayed on the console only if **NO** is selected. **Note 1:** Regardless of this setting, the value saved in interval time will be counted down between segments. Set the interval time to zero if no interval between segments is desired. **Note 2:** When the interval time is being displayed, the segment number on the scoreboard flashes to indicate that the time displayed is interval time.

Copy Range

This key sets a range of segments to a specific value.

Display	Action
COPY: MM:SS * SEG XX TO YY	Press **<COPY RANGE •>** and enter the time desired. Press **<ENTER>** to move to the next field. Enter the first and last segments that will have this time. When the last segment in the copy range is set, the menu will be exited. Once completed, all segments from XX to YY (inclusive) will be set to the specified value.
MM:SS = minutes, seconds XX = starting segment value YY = ending segment value	

Auto Stop

This key is the auto stop function of the console.

> **Note:** To set the console to stop after the last segment in the series is completed, the auto stop at each segment setting must be set to **NO**.

Display	Action
AUTO STOP AT EACH SEG Y/N*	Press **<AUTO STOP>** to enter this menu. Press **<YES>** to set the console to stop after each segment is completed. Press **<START>** to proceed with the next segment. Press **<NO>** to set the console to automatically begin the next segment when each segment is completed. The console will prompt for the auto stop at last segment setting.
AUTO STOP AT LAST SEG *Y/N	Press **<YES>** to set the console to stop when the last segment has been completed. Press **<NO>** to set the console to start over at the first segment when the last segment is completed.

Reset to First

Press **<RESET TO FIRST SEG>** to return to the first segment.

> **Note:** This function is disabled while the clock is running.

Reset Current Segment

Press **<RESET CURRENT SEGMENT>** to reset the segment time to the value specified by the current segment. The segment number will remain at the current value.

Current Segment

Press **<CURRENT SEGMENT +1>** to move to the next segment.

Edit

Current Segment

Display	Action
CURRENT SEGMENT: EDIT NN* NN = current setting	Press **<EDIT>** followed by **<CURRENT SEGMENT + 1>** to display the current segment for editing. Enter the new value for the current segment number and press **<ENTER>**.

Menu

Press **<MENU>** to access general and sport-specific options. Use the up and down arrow keys to scroll through the menu list. Press **<MENU>** again at any time to return to the game in progress.

New Code

Display	Action
MENU- MAIN NEW CODE?	Press **<ENTER>** to switch to a different sport code through the **SELECT CODE** prompt. Refer to **Start Up (p. 6)** for more information on sport codes.

Warning Time

Display	Action
WARNING TIME MM:SS* MM:SS = minutes, seconds	Enter the warning time in minutes and seconds, and then press **<ENTER>**. Enter 00:00 for no warning time (default). When the warning time is reached, the segment number flashes until the main clock reaches zero.

Dimming Menu

Refer to **Dimming Menu (p. 15)**.

Default Settings

Print this page if necessary, and record any custom settings for this installation:

Setting	Default	Custom 1	Custom 2	Custom 3	Custom 4
First Segment	1				
Last Segment	99				
Warning Timer	00:00				
Display Interval	No				
Auto Stop on Each Segment	No				
Auto Stop At Last Segment	Yes				

4 Basketball Operation

Sport Insert: LL-2433

The Sport and Team Name Insert drawings are located in **Appendix B**. The Block Diagram drawings are located in **Appendix A**. The Quick Reference is located in **Appendix D**.

Reference Drawings:

Insert, Basketball, LL-2433..... **DWG-120121**
Block Diagram: AS5000 BB- VB and WR #1..... **DWG-124686**
Block Diagram: AS5000 BB- VB and WR #3..... **DWG-124688**
Insert; LL-2442 A/S 5000, Team Name..... **DWG-125290**
Block Diagram- A/S 3000 or 5000 BB- VB and WR #2 ..... **DWG-125415**

Refer to the information in **Section 2: Basic Operation (p. 4)** to start up the console and how to use the sport insert.

If an insert is lost/damaged, use a copy of the insert drawing until a replacement arrives.

Use the label sheet provided with the console (Daktronics part # LL-2458) to attach the correct code number label to the sport insert in the designated location. Write the code number in the space below. If viewing a digital copy of this manual, print this page and fill in the code number.

Write the correct code number here: | | | | |

If the code number for a scoreboard is unknown, refer to **Appendix C**. If the scoreboard model number is unknown, refer to the documentation provided with the scoreboard.

Basketball Keys

Set Shot Time

Display	Action
SHOT CLOCK-EDIT CURR MM:SS* MM:SS = minutes, seconds	Press **<SET SHOT TIME •>** to display the current shot clock time. To accept the current shot clock time and return to the game, press **<ENTER>**. To edit the shot time, use the number pad to enter the new shot time in minutes and seconds, and then press **<ENTER>**. To discard the edited time, press **<CLEAR>** twice to clear the changes and return to the game.
SHOT CLOCK-EDIT RESET 1 MM:SS* MM:SS = minutes, seconds	Press **<SET SHOT TIME •>** two times to display the configured shot clock **Reset 1** time. To accept the shot clock **Reset 1** time and return to the game, press **<ENTER>**. To edit the shot clock **Reset 1** time, use the number pad to enter the new time in minutes and seconds, and then press **<ENTER>**. To discard the edited time, press **<CLEAR>** twice to clear the changes and return to the game. **Note:** The **Reset 1** value is set in the **EDIT SETTINGS** menu.

Display	Action
SHOT CLOCK-EDIT RESET 2 MM:SS* MM:SS = minutes, seconds	Press **<SET SHOT TIME •>** three times to display the configured shot clock **Reset 2** time. To accept the shot clock **Reset 2** time and return to the game, press **<ENTER>**. To edit the shot clock **Reset 2** time, use the number pad to enter the new time in minutes and seconds, and then press **<ENTER>**. To discard the edited time, press **<CLEAR>** twice to clear the changes and return to the game. **Note:** The **Reset 2** value is set in the **EDIT SETTINGS** menu.

Note: To blank the shot clock while keeping the rest of the scores and statistics visible: Press **<SET SHOT TIME>**, **<CLEAR>**, and then **<ENTER>**.

Recall Shot Time

Display	Action
SHOT CLOCK-MODE RECALL Y/N	Press **<RECALL SHOT TIME •>** followed by **<YES>** to recall the shot time that was remaining before the last shot clock reset was pressed. To cancel the recall, press **<NO>**.

Time Out On/Off

<TIME OUT ON/OFF> stops and starts the time out clock. The length of both the full and partial time outs can also be changed when the time out clock is stopped.

Note: Only the time outs configured in the **EDIT SETTINGS** menu are displayed on the LCD and available for selection.

Display	Action
TIME OUTS-SELECT FULL MM:SS MM:SS = minutes, seconds	Press **<TIME OUT ON/OFF>** to display the configured time for full time out length. To start the full time out, press **<ENTER>**. To cancel the full time out, press **<CLEAR>**.
TIME OUTS-SELECT PARTIAL MM:SS MM:SS = minutes, seconds	Press **<TIME OUT ON/OFF>** two times to display the configured time for partial time out length. To start the partial time out, press **<ENTER>**. To cancel the partial time out, press **<CLEAR>**.

Blank Player Foul

Press **<BLANK PLAYER FOUL>** to blank the digits of the Player-Foul field of the scoreboard.

Period +1

Display	Action
PERIOD- +1 N N = current setting	Press **<PERIOD +1>** to increment the period number. **Note:** The full and partial time outs and team fouls are automatically reset at halftime.

Time Out

The home and guest **<TIME OUT>** keys are used to decrement the number of time outs remaining and start the time out clock. The scoreboard indicator is turned on when the type of time out is selected (full or partial). The scoreboard indicator is turned off when the time out clock expires or is stopped.

Note: Only the time outs configured in the **EDIT SETTINGS** menu are displayed on the LCD and available for selection.

Display	Action
TIME OUTS-HOME FULL N N = current setting	Press **<TIME OUT>** to display the number of full time outs remaining. To accept the full time out and start the time out clock, press **<ENTER>**. To cancel the full time out, press **<CLEAR>**.
TIME OUTS-HOME PARTIAL N N = current setting	Press **<TIME OUT>** two times to display the number of partial time outs remaining. To start the partial time out, press **<ENTER>**. To cancel the partial time out, press **<CLEAR>**.
TIME OUTS-HOME OFF	To exit the running time out clock, press **<TIME OUT>**. This will turn the time out OFF.
TIME OUTS-HOME NO TIME OUTS	This message appears when there are no full time outs or partial time outs remaining.

Score (+1/+2/+3/-1)

The home and guest **<SCORE +1>**, **<SCORE +2>**, and **<SCORE +3>** keys are used to increment the team score and the **<SCORE -1>** key is used to decrement the team score.

Display	Action
TEAM SCORE- +1 HOME NNN NNN = current setting	Press the appropriate score key to increment or decrement the score for the home or guest team. The LCD shows which key was pressed and the new value for the team score of the corresponding team.
TEAM SCORE- +1 HOME PLAYER NN* NN = current setting	If the program is configured to update the player points, this prompt displays asking for a player number. Enter the jersey number of the player who scored the points, and then press **<ENTER>**.

Display	Action
HOME PLAYER NN NOT FOUND, ADD? NN = current setting	If the player is not in the roster, this prompt asks if the player should be added. Press **<YES>** to add the player to the roster and credit the points to that player. Press **<NO>** to decline the entry of the player number.
HOME PLAYER NN ROSTER FULL NN = current setting	This message displays when the answer to the previous prompt is **YES** and the roster is full.
HOME PLAYER NN POINTS XX NN = player number XX = player points	The player's jersey number and number of points display if the player was found in the game or correctly added to the roster.

Team Fouls (+1/-1)

Display	Action
TEAM FOULS- +1 HOME NN NN = current setting	Press the home or guest **<TEAM FOULS +1>** key to increment the number of team fouls for the corresponding team. The number of team fouls stop incrementing at the number of fouls configured for the 1-on-1 or 2-shot bonus.
TEAM FOULS- +1 HOME PLAYER NN* NN = current setting	If the program is configured to update the player fouls, this prompt displays asking for a player number. Enter the jersey number of the player who made the foul, and then press **<ENTER>**.
HOME PLAYER NN NOT FOUND, ADD? NN = current setting	If the player is not in the roster, this prompt asks if the player should be added. Press **<YES>** to add the player to the roster and credit the foul to that player. Press **<NO>** to decline the entry of the player number.
HOME PLAYER NN ROSTER FULL NN = current setting	This message displays when the answer to the previous prompt is **YES** and the roster is full.
HOME PLAYER NN FOULS XX NN = player number XX = player fouls	The player's jersey number and the number of fouls display if the player was found in the game or correctly added to the roster. **Note:** If a player number is not entered, the fouls will not be displayed.

Bonus

Note: Only the types of bonuses that are configured in the **EDIT SETTINGS** menu are displayed on the LCD and available for selection.

Display	Action
HOME BONUS 1-ON-1	Press the home or guest **<BONUS>** key to turn on the 1-on-1 bonus indicator for that team.
HOME BONUS 2-SHOT	Press the home or guest **<BONUS>** key two times to turn on the 2-shot bonus indicator for that team.
HOME BONUS OFF	Press the **<BONUS>** key three times to turn off both indicators.

Possession

Display	Action
HOME POSSESSION ON	Press the home or guest **<POSS>** key to turn on the possession indicator for that team.
HOME POSSESSION OFF	To turn off the possession indicator, press the same **<POSS>** key a second time, or press the opposite **<POSS>** key once.

In Game/Out of Game

The **<IN GAME>** and **<OUT OF GAME>** keys are only functional when the Home or Guest **<PLAYER>** key has been pressed.

Delete Player

The **<DELETE PLAYER>** key is only functional when the Home or Guest **<PLAYER>** key has been pressed.

Player

Note: If player stats are being received from the Daktronics Scoring-Timing Interface (DSTI), the PLAYER, IND SUB, and MASS SUB keys will be disabled. The LCD displays the messages shown below when these keys are pressed. Refer to **ED-13009** for more information about DSTI.

Display	Action
STATS RECEIVED KEY DISABLED EXIT STATS MODE Y/N?	The **KEY DISABLED** message will display for one second and then the **EXIT STATS** message will display and wait for a **<YES>** or **<NO>** key. If the **<YES>** key is pressed, the stats data will be saved in the console, and the console will exit stats mode until another stats packet is received. This will allow the operator to enter stats from the console if the connection to DSTI is lost.

Display	Action
HOME PLAYER NN* NN = current setting	When the home or guest **<PLAYER •>** key is pressed, this prompt asks the jersey number of the player to be edited. Enter the jersey number using the number pad, and then press **<ENTER>**.
HOME PLAYER NN NOT FOUND, ADD? NN = current setting	If the player is not in the roster, this prompt asks if the player should be added. Press **<YES>** to add the player to the roster. Press **<NO>** to decline the entry of the player number.
HOME PLAYER NN ROSTER FULL NN = current setting	This message displays when the answer to the previous prompt is **YES** and the roster is full.
HOME PLAYER NN S-I F-X* P-YY NN = player number S-I = **in** game S-O = **out** of game X = number of **fouls** YY = number of **points**	If the player is found, the player's game status and statistics can be changed by following the steps below. **1.** Use the up and down arrow keys to select the player from the list. **2.** Press **<IN GAME>** or **<OUT OF GAME>**. The **S** field on the display changes to show the player's current status. **3.** Use the left and right arrow keys to select the statistic to be changed. **4.** Enter the correct value for the selected statistic using the number pad, and then press **<ENTER>**. Press **<CLEAR>** to exit the menu and return to the game.
HOME PLAYER NN DELETE PLAYER? NN = current setting	To delete an incorrect player from the roster, use the up and down arrow keys to select the player from the list, and then press **<DELETE PLAYER>**. Press **<YES>** to remove the player from the roster. Press **<NO>** to decline the deletion and return to the game.

Individual Substitution

Display	Action
IND SUB- HOME NN* IN FOR XX NN = sub player XX = in game player	When the home or guest **<INDIV. SUB. •>** key is pressed, this prompt asks the jersey number of the player entering and leaving the game. Enter the jersey number of the player entering the game using the number pad, and then press **<ENTER>**. Enter the jersey number of the player leaving the game using the number pad, and then press **<ENTER>**.
IND SUB- HOME SUB OK	This message is displayed if no errors are found.

Display	Action
IND SUB- HOME SUB NOT MADE	This message is displayed for the following reasons: • The player going into the game is already marked as in. • The player coming out of the game is not marked as in.
NOT FOUND, ADD? NN* IN FOR NN = current setting	This message is displayed if the player going in the game is not found in the roster. Press **<YES>** to add the player to the roster. Otherwise, press **<NO>** followed by **<INDIV. SUB. •>** to try entering the sub again.
IND SUB- HOME NOT FOUND NN NN = current setting	This message is displayed if the player going out of the game is not found in the roster. Press **<INDIV. SUB. •>** to try entering the sub again.

Mass Substitution

Display	Action
MASS SUB-HOME PLAYER 1 NN * NN = current setting	After the home or guest **<MASS SUB. •>** key is pressed, the LCD will display a message asking for the first of five player numbers that are going into the game. Enter the jersey number using the number pad, and then press **<ENTER>** for each of the five players. Press **<CLEAR>** at any time to exit.
MASS SUB-HOME SUB OK	This message is displayed if no errors are found.
MASS SUB-HOME DUPLICATE NN NN = current setting	This message displays for each duplicate jersey number found for the five players going into the game. Press **<YES>** to correct the jersey number. Enter the correct jersey number, and then press **<ENTER>**.
NOT FOUND, ADD? PLAYER 1 NN NN = current setting	This message displays for each player not found in the roster. Press **<YES>** to add the jersey number. Press **<NO>** to ignore and select another jersey number. Enter the jersey number, and then press **<ENTER>**.

Edit

Press **<EDIT>** followed by one of the keys below to quickly edit the value.

Time Out

Note: Only the time outs configured in the **EDIT SETTINGS** menu are displayed on the LCD and available for selection.

Display	Action
TIME OUTS-HOME FULL N* N = current setting	Press **<EDIT>** followed by **<TIME OUT>** for the home or guest team to display the current setting of full time outs. Enter the correct full time outs value using the number pad, and then press **<ENTER>**.
TIME OUTS-HOME PARTIAL N* N = current setting	After accepting or rejecting the number of full time outs, the number of partial time outs is displayed. Enter the correct partial time outs value using the number pad, and then press **<ENTER>**.

Score (+1/+2/+3/-1)

Display	Action
TEAM SCORE- EDIT HOME NNN* NNN = current setting	Press **<EDIT>** and any of the **SCORE** keys for the home or guest team to display the current team score setting. Enter the correct team score value using the number pad, and then press **<ENTER>**.

Team Fouls (+1/-1)

Display	Action
TEAM FOULS- EDIT HOME N* N = current setting	Press **<EDIT>** followed by a **<TEAM FOULS>** key for the home or guest team to display the current team foul setting. Enter the correct team fouls value using the number pad, and then press **<ENTER>**.

Period +1

Display	Action
PERIOD- EDIT N* N = current setting	Press **<EDIT>** followed by **<PERIOD +1>** to display the current period setting. Enter the correct period value using the number pad, and then press **<ENTER>**.

Time Out On/Off

Display	Action
TIME OUTS-EDIT FULL MM:SS* MM:SS = minutes, seconds	Press **<EDIT>** followed by **<TIME OUT ON/OFF>** to display the current time setting for full time outs. Enter the correct full time out time value using the number pad, and then press **<ENTER>**.
TIME OUTS-EDIT PARTIAL MM:SS* MM:SS = minutes, seconds	After accepting or rejecting the full time outs time setting, the partial time outs time setting is displayed. Enter the correct partial time out time value using the number pad, and then press **<ENTER>**.

Menu

Press **<MENU>** to access general and sport-specific options. Use the up and down arrow keys to scroll through the menu list. Press **<MENU>** again at any time to return to the game in progress.

New Game

Display	Action
MENU- MAIN NEW GAME?	Press **<ENTER>** to clear all data for the current game in progress and begin a new game.

New Code

Display	Action
MENU- MAIN NEW CODE?	Press **<ENTER>** to switch to a different sport code through the **SELECT CODE** prompt. Refer to **Start Up (p. 6)** for more information on sport codes.

Dimming Menu

Refer to **Dimming Menu (p. 15)**.

Home Roster, Guest Roster

Use the **Home Roster** and **Guest Roster** menus to set up team names and other player information. **Home Roster** is used as an example below.

Display	Action
MENU- ROSTER SELECT HOME	Press **<ENTER>** to select the Roster submenu.
HOME- TEAM NAME EDIT SETTINGS?	Press **<ENTER>** to select the **Team Name Edit Settings** submenu.
HOME- TEAM NAME SELECT WIDTH	Press **<ENTER>** to select the width (in pixels) of the Team Name Message Centers (TNMC) used on the scoreboard.
HOME- TEAM NAME SIZE NN NN = current setting	Select from 16, 32, 48, or 64, and then press **<ENTER>**.
HOME- TEAM NAME SELECT FONT	On the following menu, press **<ENTER>** and use the left/right arrows to select one of the following fonts for the team name: **8H SINGLE** (single stroke), **8H BOLD** (double stroke), **8H NARROW** (single stroke, alternate narrow), or **8H NARROW BOLD** (double stroke, alternate narrow)
HOME- TEAM NAME 8H SINGLE	After selecting a font type, press **<ENTER>**.

Display	Action
HOME- TEAM NAME _OME *	**Use the TEAM NAME (LL-2441) insert to change the Team Name Message Center (TNMC) settings.** Type in a team name of up to 15 characters and press **<ENTER>**. Refer to **Team Name Entry (p. 19)** for more information.
HOME- TEAM ABBR EDIT SETTINGS? HOME- TEAM ABBR SELECT WIDTH HOME- TEAM ABBR SIZE NN NN = current setting	Press **<ENTER>** to select the **Team Abbreviation Edit Settings** submenu. Press **<ENTER>** to select the width (in pixels) of the Team Name Message Centers (TNMC) used on the scoreboard. Select from 16, 32, 48, or 64, and then press **<ENTER>**.
HOME- TEAM ABBR SELECT FONT HOME- TEAM ABBR 8H SINGLE	On the following menu, press **<ENTER>** and use the left/right arrows to select one of the following fonts for the team name: **8H SINGLE** (single stroke), **8H BOLD** (double stroke), **8H NARROW** (single stroke, alternate narrow), or **8H NARROW BOLD** (double stroke, alternate narrow) After selecting a font type, press **<ENTER>**.
HOME- TEAM ABBR _OME *	Type in a team abbreviation of up to 10 characters and press **<ENTER>**. **Reinsert the BASKETBALL (LL-2433) insert to continue.**
MENU- HOME EDIT PLAYERS? MENU- HOME PLAYER 01 NN* NN = current setting	Press **<YES>** to assign jersey numbers for all players in the roster. Press **<NO>** to exit the submenu and return to the Main menu. Once **EDIT PLAYERS** is selected, enter the jersey number for that player from the official roster and press **<ENTER>**. The next player is shown on the LCD. Continue entering the jersey numbers for up to 15 players. Press **<CLEAR>** to advance to the next option.
MENU- HOME CLEAR STATS?	**This function clears all game statistics and should only be used before the start of a game.** Press **<YES>** to clear the stats for all players in the team's roster. Press **<NO>** to cancel clearing the stats.

Display Menu
Refer to **Display Menu (p. 15)** for more information.

Color Menu
Refer to **Color Menu (p. 16)** for more information.

Time of Day
Refer to **Time of Day (p. 17)** for more information.

Edit Settings

Display	Action
MENU- MAIN EDIT SETTINGS?	From the Main Menu, select the **EDIT SETTINGS** submenu to modify the settings below.

Number of Periods

Display	Action
NO. OF PERIODS=N 2 OR 4? N = current setting	The Number of Periods setting indicates whether the game consists of two halves or four quarters. Press **<2>** or **<4>** on the number pad to select the desired number of periods.

Main Clock

The settings for the Main Clock are used with the **<SET MAIN CLOCK>** key.

The period, break, and overtime lengths are used differently depending on the direction of the main clock. For count down, the main clock is set to the selected length, decrements towards zero, and stops at zero. For count up, the main clock is set to zero, increments towards the selected length, and stops when the selected length is reached.

Display	Action
MAIN CLOCK-MODE TENTH SECOND? Y	When the main clock is set to count down and tenths of a second is selected, the main clock displays in tenths of a second remaining when the time is below one minute. Press **<YES>** to set the main clock to display tenths of a second. Press **<NO>** to display whole seconds.
MAIN CLOCK-TIME PERIOD MM:SS* MM:SS = minutes, seconds	Enter the correct amount of time per period in minutes and seconds using the number pad, and then press **<ENTER>**. **Note:** Pressing **<ENTER>** to select the period time as the main clock setting will increment the current period number if the clock value was previously zero.
MAIN CLOCK-TIME BREAK MM:SS* MM:SS = minutes, seconds	Set the amount of time between periods. Enter the correct amount of time for break length in minutes and seconds using the number pad, and then press **<ENTER>**.
MAIN CLOCK-TIME OVERTIME MM:SS* MM:SS = minutes, seconds	Set the amount of time for the overtime periods. Enter the correct amount of time for overtime periods in minutes and seconds using the number pad, and then press **<ENTER>**.

Shot Clock

Display	Action
SHOT CLOCK-TIME RESET 1 MM:SS* SHOT CLOCK-TIME RESET 2 MM:SS* MM:SS = minutes, seconds	This setting is used for the **<RESET>** button on the remote shot clock control console. **Note:** The current setting for the **<RESET>** time displays on the LCD until the first number key is pressed. Enter the correct amount of reset time in minutes and seconds using the number pad, and then press **<ENTER>**.
SHOT CLOCK-MODE SYNC W/ MAIN? Y	Press **<YES>** to synchronize the shot clock with the main clock. If **<STOP>** for the main clock is pressed while the main and shot clocks are running, the shot clock also stops. The shot clock restarts when **<START>** is pressed for the main clock. Press **<NO>** to allow the shot clock to run independently of the main clock. The shot clock starts and stops only with the switch on the remote shot clock control console.
SHOT CLOCK-MODE AUTO BLANK? Y	Press **<YES>** to blank the shot clock time when the shot clock time is greater than or equal to the main clock time. The shot clock is reset and stopped when the display is blanked to eliminate inadvertent sounding of shot clock horn. Press **<NO>** to display the shot clock time at all times.

Time Outs

If a full or partial time out is not needed for the HOME or GUEST **<TIME OUT>** keys, enter zero for the number of time outs.

If a full or partial time out is not needed for **<TIME OUT ON/OFF>**, enter zero for the time.

The number for each type of time out must be manually entered for an overtime period using the **<EDIT> <TIME OUT>** key sequence for each team.

Display	Action
TIME OUTS- MODE FULL N * N = current setting	Enter the number of full time outs using the number pad, and then press **<ENTER>**.
TIME OUTS- TIME FULL MM:SS* MM:SS = minutes, seconds	Enter the amount of time for a full time out in minutes and seconds using the number pad, and then press **<ENTER>**.
TIME OUTS- MODE WARNING MM:SS* MM:SS = minutes, seconds	A warning horn can be configured to signal the end of a full time out. While the time out clock is counting down, the horn will sound for one second when the warning time is reached. Enter a zero for the time to disable the warning horn. Enter the time in minutes and seconds using the number pad, and then press **<ENTER>**.

Display	Action
TIME OUTS- MODE PARTIAL N * N = current setting	Enter the number of partial time outs using the number pad, and then press **<ENTER>**.
TIME OUTS- TIME PARTIAL MM:SS* MM:SS = minutes, seconds	Enter the amount of time for a partial time out in minutes and seconds using the number pad, and then press **<ENTER>**.
TIME OUTS- MODE PRTL WARN MM:SS* MM:SS = minutes, seconds	A warning horn can be configured to signal the end of a partial time out. While the time out clock is counting down, the horn will sound for one second when the warning time is reached. Enter a zero for the time to disable the warning horn. Enter the time in minutes and seconds using the number pad, and then press **<ENTER>**.
TIME OUTS-MODE SHOW ON MAIN? N	Press **<YES>** to display the time out time on the LCD and the clock digits of the scoreboard while the time out clock is active, or press **<NO>** to display the time out time on the LCD only.

Team Score

Display	Action
TEAM SCORE- MODE UPDATE PLAYER? Y	**This feature must be enabled for statistics displays.** Press **<YES>** to allow entry of a player number after the home or guest team scores are incremented or decremented. Press **<NO>** to prevent entry of a player number.

Team Fouls

Display	Action
TEAM FOULS- MODE UPDATE PLAYER? Y	**This feature must be enabled for statistics displays.** Press **<YES>** to allow entry of a player number after the home or guest team fouls are incremented or decremented. Press **<NO>** to prevent entry of a player number.
TEAM FOULS- MODE 1-ON-1 BONUS N * N = current setting	Enter the number of team fouls permitted before the 1-on-1 bonus applies, and then press **<ENTER>**. The home and guest team fouls stop incrementing at this number unless the 2-shot bonus is enabled. Enter zero to disable this feature.
TEAM FOULS- MODE 2 SHOT BONUS NN* NN = current setting	Enter the number of team fouls permitted before the 2-shot bonus applies, and then press **<ENTER>**. Enter zero to disable this feature.

Select Captions

Display	Action
SELECT CAPTIONS ON 1←– –→ 2 OFF	This menu option allows for the controlled backlit captions to be turned ON/OFF. Press the **<1>** key to select ON and OFF for captions controlled by control #1. Press the **<2>** key to select ON and OFF for captions controlled by control #2.

Select Team Foul Display

Display	Action
TEAM FOULS SHOW ON STATS? Y	This menu option selects whether or not to show team fouls on line 6 of player stats panels. To display team fouls, press **<YES>**. To not display team fouls, press **<NO>**.

Score by Quarter

Display	Action
SCORE BY QUARTER Y/N? N	This feature allows for scores to be recorded by quarter. This data is available on the RTD output. Press **<YES>** to score by quarter, or press **<NO>** to not score by quarter. **Note:** If this feature is enabled, all scores are edited by quarter. Use this function only when needed.

Shot Horn Control

Display	Action
SHOT HRN CONTROL SET= SHOT HORN	This menu option allows the selection of what will control the output for the shot clock horn. Use the left or right arrow keys to scroll to the desired setting, or use the **<0>** – **<3>** number keys. Press **<ENTER>** when the desired setting is shown. 0 = NO CONTROL, 1 = MAIN HORN, 2 = SHOT HORN, 3 = MAIN & SHOT

Light Control

Display	Action
LIGHT CONTROL SET= CLK=0	This menu option allows the selection of what will control the output for the light strip displays. Use the left or right arrow keys to scroll to the desired setting, or use the **<1>** – **<6>** number keys. Press **<ENTER>** when the desired setting is shown. 1 = CLK=0, 2 = CLK STOP, 3 = (not used), 4 = MAIN HORN, 5 = CLK=0 & HRN, 6 = STOP & HRN

Switch Output

Refer to **Switch Output (p. 18)** for more information.

Default Settings

Print this page if necessary, and record any custom settings for this installation:

Setting	Default	Custom 1	Custom 2	Custom 3	Custom 4
Number of Periods	4				
Tenth of a Second	Yes				
Period Length	8:00				
Break Length	10:00				
Overtime Length	5:00				
Pre-Game Length	20:00				
Post-Game Length	30:00				
Shot Clock Reset 1	0:45				
Shot Clock Reset 2	0:30				
Sync Shot with Main	Yes				
Shot Clock Auto Blank	Yes				
Full Time Outs	3				
Full Time Out	1:00				
Time Out Warning	0:00				
Partial Time Outs	2				
Partial Time Out	00:20				
Partial Time Out Warn	0:00				
Show on Main	No				
Update Player Score	No				
Update Player Fouls	Yes				
1-on-1 Bonus	7				
2-Shot Bonus	10				
Select Captions	1-ON				
Show Fouls on Stats	No				
Score by Quarter	No				
Shot Horn Control	Main Horn				
Light Control	Clk=0				
Switch Output	1-Clock = 0				

5 Volleyball Operation

Sport Insert: LL-2434

The Sport and Team Name Insert drawings are located in **Appendix B**. The Block Diagram drawings are located in **Appendix A**. The Quick Reference is located in **Appendix D**.

Reference Drawings:

Block Diagram: AS5000 BB- VB and WR #1 ..... **DWG-124686**
Block Diagram: AS5000 BB- VB and WR #3 ..... **DWG-124688**
Insert; LL-2434 A/S 5000, Volleyball **DWG-125055**
Insert; LL-2441 A/S 5000, Team Name **DWG-125290**
Block Diagram- A/S 3000 or 5000 BB- VB and WR #2 ..... **DWG-125415**

Refer to the information in **Section 2: Basic Operation (p. 4)** to start up the console and how to use the sport insert.

If an insert is lost/damaged, use a copy of the insert drawing until a replacement arrives.

Use the label sheet provided with the console (Daktronics part # LL-2458) to attach the correct code number label to the sport insert in the designated location. Write the code number in the space below. If viewing a digital copy of this manual, print this page and fill in the code number.

Write the correct code number here: | | | | |

If the code number for a scoreboard is unknown, refer to **Appendix C**. If the scoreboard model number is unknown, refer to the documentation provided with the scoreboard.

Volleyball Keys

Time Out On/Off

<TIME OUT ON/OFF> stops and starts the time out clock. The length of both the full and partial time outs can also be changed when the time out clock is stopped.

Note: Only the time outs configured in the **EDIT SETTINGS** menu are displayed on the LCD and available for selection.

Display	Action
TIME OUTS-SELECT FULL MM:SS MM:SS = minutes, seconds	Press **<TIME OUT ON/OFF>** to display the configured time for full time out length. To start the full time out, press **<ENTER>**. To cancel the full time out, press **<CLEAR>**.
TIME OUTS-SELECT PARTIAL MM:SS MM:SS = minutes, seconds	Press **<TIME OUT ON/OFF>** two times to display the configured time for partial time out length. To start the partial time out, press **<ENTER>**. To cancel the partial time out, press **<CLEAR>**.

Time Out

The home and guest **<TIME OUT>** keys are used to decrement the number of time outs remaining and start the time out clock. The scoreboard indicator is turned on when the type of time out is selected (full or partial). The scoreboard indicator is turned off when the time out clock expires or is stopped.

> **Note:** Only the time outs configured in the **EDIT SETTINGS** menu are displayed on the LCD and available for selection.

Display	Action
TIME OUTS-HOME FULL N N = current setting	Press **<TIME OUT>** to display the number of full time outs remaining. To accept the full time out and start the time out clock, press **<ENTER>**. To cancel the full time out, press **<CLEAR>**.
TIME OUTS-HOME PARTIAL N N = current setting	Press **<TIME OUT>** two times to display the number of partial time outs remaining. To start the partial time out, press **<ENTER>**. To cancel the partial time out, press **<CLEAR>**.
TIME OUTS-HOME OFF	To exit the running time out clock, press **<TIME OUT>**. This will turn the time out OFF.
TIME OUTS-HOME NO TIME OUTS	This message appears when there are no full time outs or partial time outs remaining.

Match Number +1, Sets +1

The **<MATCH NUMBER +1>** and **<SETS +1>** keys are both used to increment their respective totals. **<SETS +1>** is used as an example below.

Display	Action
SET NO: +1 N N = current setting	Press the appropriate key to increment statistics for the home or guest team. The LCD shows which key was pressed and the new value for the corresponding team.

Score (+1/-1)

The home and guest **<SCORE +1>** and **<SCORE -1>** keys are used to increment and decrement the team score.

Display	Action
TEAM SCORE: +1 HOME NN NN = current setting	Press the appropriate score key to increment or decrement the score for the home or guest team. The LCD shows which key was pressed and the new value for the team score of the corresponding team.

Sets Won +1, Subs +1

The **<SETS WON +1>** and **<SUBS +1>** keys are both used to increment their respective totals. **<SETS WON +1>** is used as an example below.

Display	Action
SETS WON: +1 HOME NN NN = current setting	Press the appropriate key to increment statistics for the home or guest team. The LCD shows which key was pressed and the new value for the corresponding team.

Aces +1, Kills +1, Blocks +1, Digs +1

The home and guest **<ACES +1>**, **<KILLS +1>**, **<BLOCKS +1>**, and **<DIGS +1>** keys are all used to increment their respective totals. **<ACES +1>** is used as an example below.

Display	Action
ACES: +1 HOME NNN NNN = current setting	Press the appropriate key to increment statistics for the home or guest team. The LCD shows which key was pressed and the new value for the corresponding team.
ACES: +1 HOME PLAYER NN* NN = current setting	If the program is configured to update the player stats, this prompt displays asking for a player number. Enter the jersey number of the player who made the play using the number pad, and then press **<ENTER>**.
HOME PLAYER NN NOT FOUND, ADD? NN = current setting	If the player is not in the roster, this prompt asks if the player should be added. Press **<YES>** to add the player to the roster and credit the play to that player. Press **<NO>** to decline the entry of the player number.
HOME PLAYER NN ROSTER FULL NN = current setting	This message displays when the answer to the previous prompt is **YES** and the roster is full.
HOME PLAYER NN ACES XX NN = player number XX = current stat value	The player's jersey number and stats display if the player was found in the game or correctly added to the roster.

Serve

Display	Action
HOME SERVE ON	Press the home or guest **<SERVE>** key to turn on the indicator for that team.

Display	Action
HOME SERVE OFF	To turn off the indicator, press the same **<SERVE>** key a second time, or press the opposite **<SERVE>** key once.

In Game/Out of Game

The **<IN GAME>** and **<OUT OF GAME>** keys are only functional when the Home or Guest **<PLAYER>** key has been pressed.

Delete Player

The **<DELETE PLAYER>** key is only functional when the Home or Guest **<PLAYER>** key has been pressed.

Player

Note: If player stats are being received from the Daktronics Scoring-Timing Interface (DSTI), the PLAYER, IND SUB, and MASS SUB keys will be disabled. The LCD displays the messages shown below when these keys are pressed. Refer to **ED-13009** for more information about DSTI.

Display	Action
STATS RECEIVED KEY DISABLED EXIT STATS MODE Y/N?	The **KEY DISABLED** message will display for one second and then the **EXIT STATS** message will display and wait for a **<YES>** or **<NO>** key. If the **<YES>** key is pressed, the stats data will be saved in the console, and the console will exit stats mode until another stats packet is received. This will allow the operator to enter stats from the console if the connection to DSTI is lost.
HOME PLAYER NN* NN = current setting	When the home or guest **<PLAYER •>** key is pressed, this prompt asks the jersey number of the player to be edited. Enter the jersey number using the number pad, and then press **<ENTER>**.
HOME PLAYER NN NOT FOUND, ADD? NN = current setting	If the player is not in the roster, this prompt asks if the player should be added. Press **<YES>** to add the player to the roster. Press **<NO>** to decline the entry of the player number.
HOME PLAYER NN ROSTER FULL NN = current setting	This message displays when the answer to the previous prompt is **YES** and the roster is full.

Display	Action
HOME PLAYER NN S-I A-XX* K-YY NN = player number S-I = **in** game S-O = **out** of game XX = number of **aces** YY = number of **kills** HOME PLAYER NN S-I B-XX* D-YY XX = number of **blocks** YY = number of **digs**	If the player is found, the player's game status and statistics can be changed by following the steps below. **1.** Use the up and down arrow keys to select the player from the list. **2.** Press **<IN GAME>** or **<OUT OF GAME>**. The **S** field on the display changes to show the player's current status. **3.** Use the left and right arrow keys to select the statistic to be changed. The display shifts to show all of the statistic fields. **4.** Enter the correct value for the selected statistic using the number pad, and then press **<ENTER>**. Press **<CLEAR>** to exit the menu and return to the game.
HOME PLAYER NN DELETE PLAYER? NN = current setting	To delete an incorrect player from the roster, use the up and down arrow keys to select the player from the list, and then press **<DELETE PLAYER>**. Press **<YES>** to remove the player from the roster. Press **<NO>** to decline the deletion and return to the game.

Individual Substitution

Display	Action
IND SUB- HOME NN* IN FOR XX NN = sub player XX = in game player	When the home or guest **<INDIV. SUB. •>** key is pressed, this prompt asks the jersey number of the player entering and leaving the game. Enter the jersey number of the player entering the game using the number pad, and then press **<ENTER>**. Enter the jersey number of the player leaving the game using the number pad, and then press **<ENTER>**.
IND SUB- HOME SUB OK	This message is displayed if no errors are found.
IND SUB- HOME SUB NOT MADE	This message is displayed for the following reasons: • The player going into the game is already marked as in. • The player coming out of the game is not marked as in.
NOT FOUND, ADD? NN* IN FOR NN = current setting	This message is displayed if the player going in the game is not found in the roster. Press **<YES>** to add the player to the roster. Otherwise, press **<NO>** followed by **<INDIV. SUB. •>** to try entering the sub again.

Display	Action
IND SUB- HOME NOT FOUND NN NN = current setting	This message is displayed if the player going out of the game is not found in the roster. Press **<INDIV. SUB. •>** to try entering the sub again.

Mass Substitution

Display	Action
MASS SUB-HOME PLAYER 1 NN * NN = current setting	After the home or guest **<MASS SUB. •>** key is pressed, the LCD will display a message asking for the first of five player numbers that are going into the game. Enter the jersey number using the number pad, and then press **<ENTER>** for each of the five players. Press **<CLEAR>** at any time to exit.
MASS SUB-HOME SUB OK	This message is displayed if no errors are found.
MASS SUB-HOME DUPLICATE NN NN = current setting	This message displays for each duplicate jersey number found for the five players going into the game. Press **<YES>** to correct the jersey number. Enter the correct jersey number, and then press **<ENTER>**.
NOT FOUND, ADD? PLAYER 1 NN NN = current setting	This message displays for each player not found in the roster. Press **<YES>** to add the jersey number. Press **<NO>** to ignore and select another jersey number. Enter the jersey number, and then press **<ENTER>**.

Edit

Press **<EDIT>** followed by one of the keys below to quickly edit the value.

Time Out

Note: Only the time outs configured in the **EDIT SETTINGS** menu are displayed on the LCD and available for selection.

Display	Action
TIME OUTS-HOME FULL N* N = current setting	Press **<EDIT>** followed by **<TIME OUT>** for the home or guest team to display the current setting of full time outs. Enter the correct full time outs value using the number pad, and then press **<ENTER>**.
TIME OUTS-HOME PARTIAL N* N = current setting	After accepting or rejecting the number of full time outs, the number of partial time outs is displayed. Enter the correct partial time outs value using the number pad, and then press **<ENTER>**.

Score (+1/-1)

Display	Action
 NNN = current setting	Press **<EDIT>** and either of the **SCORE** keys for the home or guest team to display the current team score setting. Enter the correct team score value using the number pad, and then press **<ENTER>**.

Match Number +1, Sets +1

The **<MATCH NUMBER +1>** and **<SETS +1>** keys are both edited in the same way. **<SETS +1>** is used as an example below.

Display	Action
 N = current setting	Press **<EDIT>** followed by the appropriate statistic key to display the current setting. Enter the correct value using the number pad, and then press **<ENTER>**.

Sets Won +1, Subs +1

The home and guest **<SETS WON +1>** and **<SUBS +1>** keys are both edited in the same way. **<SETS WON +1>** is used as an example below.

Display	Action
 NN = current setting	Press **<EDIT>** followed by the appropriate statistic key to display the current setting. Enter the correct value using the number pad, and then press **<ENTER>**.

Aces +1, Kills +1, Blocks +1, Digs +1

The home and guest **<ACES +1>**, **<KILLS +1>**, **<BLOCKS +1>**, and **<DIGS +1>** keys are all edited in the same way. **<ACES +1>** is used as an example below.

Display	Action
 NNN = current setting	Press **<EDIT>** followed by the appropriate statistic key to display the current setting. Enter the correct value using the number pad, and then press **<ENTER>**.

Time Out On/Off

Display	Action
 MM:SS = minutes, seconds	Press **<EDIT>** followed by **<TIME OUT ON/OFF>** to display the current time setting for full time outs. Enter the correct full time out time value using the number pad, and then press **<ENTER>**.

Display	Action
TIME OUTS-EDIT PARTIAL MM:SS* MM:SS = minutes, seconds	After accepting or rejecting the full time outs time setting, the partial time outs time setting is displayed. Enter the correct partial time out time value using the number pad, and then press **<ENTER>**.

Menu

Press **<MENU>** to access general and sport-specific options. Use the up and down arrow keys to scroll through the menu list. Press **<MENU>** again at any time to return to the game in progress.

New Game

Display	Action
MENU- MAIN NEW GAME?	Press **<ENTER>** to clear all data for the current game in progress and begin a new game.

New Code

Display	Action
MENU- MAIN NEW CODE?	Press **<ENTER>** to switch to a different sport code through the **SELECT CODE** prompt. Refer to **Start Up (p. 6)** for more information on sport codes.

Dimming Menu

Refer to **Dimming Menu (p. 15)**.

Home Roster, Guest Roster

Use the **Home Roster** and **Guest Roster** menus to set up team names and other player information. **Home Roster** is used as an example below.

Display	Action
MENU- ROSTER SELECT HOME	Press **<ENTER>** to select the Roster submenu.
HOME- TEAM NAME EDIT SETTINGS? HOME- TEAM NAME SELECT WIDTH HOME- TEAM NAME SIZE NN NN = current setting	Press **<ENTER>** to select the **Team Name Edit Settings** submenu. Press **<ENTER>** to select the width (in pixels) of the Team Name Message Centers (TNMC) used on the scoreboard. Select from 16, 32, 48, or 64, and then press **<ENTER>**.

Display	Action
HOME- TEAM NAME SELECT FONT HOME- TEAM NAME 8H SINGLE	On the following menu, press **<ENTER>** and use the left/right arrows to select one of the following fonts for the team name: **8H SINGLE** (single stroke), **8H BOLD** (double stroke), **8H NARROW** (single stroke, alternate narrow), or **8H NARROW BOLD** (double stroke, alternate narrow) After selecting a font type, press **<ENTER>**.
HOME- TEAM NAME _OME *	**Use the TEAM NAME (LL-2441) insert to change the Team Name Message Center (TNMC) settings.** Type in a team name of up to 15 characters and press **<ENTER>**. Refer to **Team Name Entry (p. 19)** for more information.
HOME- TEAM ABBR EDIT SETTINGS? HOME- TEAM ABBR SELECT WIDTH HOME- TEAM ABBR SIZE NN NN = current setting	Press **<ENTER>** to select the **Team Abbreviation Edit Settings** submenu. Press **<ENTER>** to select the width (in pixels) of the Team Name Message Centers (TNMC) used on the scoreboard. Select from 16, 32, 48, or 64, and then press **<ENTER>**.
HOME- TEAM ABBR SELECT FONT HOME- TEAM ABBR 8H SINGLE	On the following menu, press **<ENTER>** and use the left/right arrows to select one of the following fonts for the team name: **8H SINGLE** (single stroke), **8H BOLD** (double stroke), **8H NARROW** (single stroke, alternate narrow), or **8H NARROW BOLD** (double stroke, alternate narrow) After selecting a font type, press **<ENTER>**.
HOME- TEAM ABBR _OME *	Type in a team abbreviation of up to 10 characters and press **<ENTER>**. **Reinsert the VOLLEYBALL (LL-2434) insert to continue.**
MENU- HOME EDIT PLAYERS? MENU- HOME PLAYER 01 NN* NN = current setting	Press **<YES>** to assign jersey numbers for all players in the roster. Press **<NO>** to exit the submenu and return to the Main menu. Once **EDIT PLAYERS** is selected, enter the jersey number for that player from the official roster and press **<ENTER>**. The next player is shown on the LCD. Continue entering the jersey numbers for up to 15 players. Press **<CLEAR>** to advance to the next option.
MENU- HOME CLEAR STATS?	**This function clears all game statistics and should only be used before the start of a game.** Press **<YES>** to clear the stats for all players in the team's roster. Press **<NO>** to cancel clearing the stats.

Display Menu
Refer to **Display Menu (p. 15)** for more information.

Color Menu
Refer to **Color Menu (p. 16)** for more information.

Time of Day
Refer to **Time of Day (p. 17)** for more information.

Edit Settings

Display	Action
MENU- MAIN EDIT SETTINGS?	From the Main Menu, select the **EDIT SETTINGS** submenu to modify the settings below.

Main Clock
The settings for the Main Clock are used with the **<SET MAIN CLOCK>** key.

The period and break lengths are used differently depending on the direction of the main clock. For count down, the main clock is set to the selected length, decrements towards zero, and stops at zero. For count up, the main clock is set to zero, increments towards the selected length, and stops when the selected length is reached.

Display	Action
MAIN CLOCK-MODE TENTH SECOND? Y	When the main clock is set to count down and tenths of a second is selected, the main clock displays in tenths of a second remaining when the time is below one minute. Press **<YES>** to set the main clock to display tenths of a second. Press **<NO>** to display whole seconds.
MAIN CLOCK-TIME PERIOD MM:SS* MM:SS = minutes, seconds	Enter the correct amount of time per period in minutes and seconds using the number pad, and then press **<ENTER>**. **Note:** Pressing **<ENTER>** to select the period time as the main clock setting will increment the current period number if the clock value was previously zero.
MAIN CLOCK-TIME BREAK MM:SS* MM:SS = minutes, seconds	Set the amount of time between periods. Enter the correct amount of time for break length in minutes and seconds using the number pad, and then press **<ENTER>**.

Time Outs
If a full or partial time out is not needed for the HOME or GUEST **<TIME OUT>** keys, enter zero for the number of time outs.

If a full or partial time out is not needed for **<TIME OUT ON/OFF>**, enter zero for the time.

Display	Action
TIME OUTS- MODE FULL N * N = current setting	Enter the number of full time outs using the number pad, and then press **<ENTER>**.
TIME OUTS- TIME FULL MM:SS* MM:SS = minutes, seconds	Enter the amount of time for a full time out in minutes and seconds using the number pad, and then press **<ENTER>**.
TIME OUTS- MODE WARNING MM:SS* MM:SS = minutes, seconds	A warning horn can be configured to signal the end of a full time out. While the time out clock is counting down, the horn will sound for one second when the warning time is reached. Enter a zero for the time to disable the warning horn. Enter the time in minutes and seconds using the number pad, and then press **<ENTER>**.
TIME OUTS- MODE PARTIAL N * N = current setting	Enter the number of partial time outs using the number pad, and then press **<ENTER>**.
TIME OUTS- TIME PARTIAL MM:SS* MM:SS = minutes, seconds	Enter the amount of time for a partial time out in minutes and seconds using the number pad, and then press **<ENTER>**.
TIME OUTS-MODE SHOW ON MAIN? N	Press **<YES>** to display the time out time on the LCD and the clock digits of the scoreboard while the time out clock is active, or press **<NO>** to display the time out time on the LCD only.

Team Stats

Display	Action
TEAM STATS-MODE UPDATE PLAYER? Y	**This feature must be enabled for statistics displays.** Press **<YES>** to allow entry of a player number after the home or guest team aces, kills, blocks, or digs are incremented or decremented. Press **<NO>** to prevent entry of a player number.

User Def 1 & User Def 2

User Def 1 and **User Def 2** are used to define which statistics (aces, kills, blocks, or digs) are shown on the statistic displays. Only two of the four statistics can be selected for display at any given time.

- **User Def 1** displays the statistics in the Foul digits.
- **User Def 2** displays the statistics in the Points digits.

User Def 1 and **User Def 2** are entered in the same way. **User Def 1** is used as an example.

Display	Action
USER DEF 1=N 1-ACES USER DEF 1=N 2-KILLS USER DEF 1=N 3-BLOCKS USER DEF 1=N 4-DIGS N = current setting	• Press **<1>** or use the left/right arrow keys to scroll to **ACES**. • Press **<2>** or use the left/right arrow keys to scroll to **KILLS**. • Press **<3>** or use the left/right arrow keys to scroll to **BLOCKS**. • Press **<4>** or use the left/right arrow keys to scroll to **DIGS**. Press **<ENTER>** to display the selected stat on the scoreboard. Press **<CLEAR>** to cancel and return to the game.

Select Captions

Display	Action
SELECT CAPTIONS ON 1<- -> 2 OFF	This menu option allows for the controlled backlit captions to be turned ON/OFF. Press the **<1>** key to select ON and OFF for captions controlled by control #1. Press the **<2>** key to select ON and OFF for captions controlled by control #2.

Shot Horn Control

Display	Action
SHOT HRN CONTROL SET= SHOT HORN	This menu option allows the selection of what will control the output for the shot clock horn. Use the left or right arrow keys to scroll to the desired setting, or use the **<0>** – **<3>** number keys. Press **<ENTER>** when the desired setting is shown. 0 = NO CONTROL, 1 = MAIN HORN, 2 = SHOT HORN, 3 = MAIN & SHOT

Light Control

Display	Action
LIGHT CONTROL SET= CLK=0	This menu option allows the selection of what will control the output for the light strip displays. Use the left or right arrow keys to scroll to the desired setting, or use the **<1>** – **<6>** number keys. Press **<ENTER>** when the desired setting is shown. 1 = CLK=0, 2 = CLK STOP, 3 = (not used), 4 = MAIN HORN, 5 = CLK=0 & HRN, 6 = STOP & HRN

Switch Output

Refer to **Switch Output (p. 18)** for more information.

Default Settings

Print this page if necessary, and record any custom settings for this installation:

Setting	Default	Custom 1	Custom 2	Custom 3	Custom 4
Tenth of a Second	No				
Period Length	60:00				
Break Length	3:00				
Pre-Game Length	20:00				
Post-Game Length	30:00				
Full Time Outs	2				
Full Time Out	0:30				
Time Out Warning	0:00				
Partial Time Outs	0				
Partial Time Out	0:00				
User Def 1	Aces				
User Def 2	Kills				
Update Player	No				
Select Captions	1-ON				
Shot Horn Control	Main Horn				
Light Control	Clk=0				
Switch Output	1-Clock = 0				

6 Wrestling Operation

Sport Insert: LL-2435

The Sport and Team Name Insert drawings are located in **Appendix B**. The Block Diagram drawings are located in **Appendix A**. The Quick Reference is located in **Appendix D**.

Reference Drawings:

Block Diagram: AS5000 BB- VB and WR #1 ..... **DWG-124686**
Block Diagram: AS5000 BB- VB and WR #3 ..... **DWG-124688**
Insert; LL-2435 A/S 5000, Wrestling **DWG-124701**
Insert; LL-2441 A/S 5000, Team Name **DWG-125290**
Block Diagram- A/S 3000 or 5000 BB- VB and WR #2 ..... **DWG-125415**

Refer to the information in **Section 2: Basic Operation (p. 4)** to start up the console and how to use the sport insert.

If an insert is lost/damaged, use a copy of the insert drawing until a replacement arrives.

Use the label sheet provided with the console (Daktronics part # LL-2458) to attach the correct code number label to the sport insert in the designated location. Write the code number in the space below. If viewing a digital copy of this manual, print this page and fill in the code number.

Write the correct code number here: | | | | |

If the code number for a scoreboard is unknown, refer to **Appendix C**. If the scoreboard model number is unknown, refer to the documentation provided with the scoreboard.

Wrestling Keys

Match Number +1

Display	Action
MATCH- +1 NNN NNN = current setting	Press **<MATCH +1>** to increment the match number. The match number displays briefly.
WEIGHT CLASS 01 NNN NNN = weight class	If weight classes are enabled, a prompt to select a weight class will be shown on the LCD. Use the arrow keys to select a weight class, and then press **<ENTER>**. The weight class displays in the Match digits.

Period +1

Display	Action
PERIOD- +1 N N = current setting	Press **<PERIOD +1>** to increment the quarter number. The period number displays briefly. The period time will be set to the configured period time if the current time is at zero. There are 5 configured period times and the time will be set based on the current period number. If the current time was set before the **<PERIOD +1>** key is pressed, the time will not be adjusted.

Set Main Clock (Period Times)

Display	Action
MAIN CLOCK -SET CURR MM:SS* MM:SS = minutes, seconds	After the main clock has been stopped, press **<SET MAIN CLOCK>** to display the current time of the main clock. To change the time, enter the desired time using the number pad, and then press **<ENTER>**. Press **<CLEAR>** twice to cancel and return to the game.
MAIN CLOCK -EDIT PERIOD MM:SS* MAIN CLOCK -EDIT PER 2 MM:SS* MAIN CLOCK -EDIT PER 3 MM:SS* MAIN CLOCK -EDIT PER 4 MM:SS* MAIN CLOCK -EDIT PER 5 MM:SS* MM:SS = minutes, seconds	Press **<SET MAIN CLOCK>** a second, third, fourth, fifth, or sixth time to display the configured time for each clock period. To accept the displayed period length press **<YES>**. To decline the selection of the period length press **<NO>**. To change the period length and set the main clock, enter the new time in minutes and seconds using the number pad, and then press **<ENTER>**. Press **<CLEAR>** twice to cancel and return to the game.

Home Advantage, Guest Advantage, Stop Advantage Clock

Display	Action
TIME M:SS ↓ AD TM M:SS.T >G M:SS = minutes, seconds (main clock) M:SS.T = minutes, seconds, tenths of a second (advantage timer) G or H = guest or home	The main clock must be running to use the advantage timer. Press the **<HOME (GREEN) ADVANTAGE>** or **<GUEST (RED) ADVANTAGE>** key to start the advantage timer for the competitor that has control of the match. The competitor that has the net (most) advantage time is shown on the LCD display (<H or >G). The timer (AD TM on the display) counts up or down depending on which competitor is in control (last advantage key pressed) and which competitor has the net (most) advantage time. For example: If the home competitor is the first to control the match, press **<HOME (GREEN) ADVANTAGE>**. The display shows <H and the timer (AD TM) counts up. When the guest competitor gains control, press **<GUEST (RED) ADVANTAGE>**. The display still shows <H (because home still has the net advantage) but the timer (AD TM) counts down. The timer continues to count down until the **<HOME (GREEN) ADVANTAGE>** is pressed again or the timer reaches zero. If zero is reached, the display shows >G (which now has the net advantage) and the timer counts up. Press the **<STOP ADVANTAGE CLOCK>** key to stop the advantage timer when neither competitor is in control.

Team Score (+1/-1)

Display	Action
TEAM SCORE- +1 HOME NNN NNN = current setting	Press **<SCORE +1>** or **<SCORE -1>** to increment or decrement the home or guest team score. Total score displays briefly. Pressing a **<TEAM SCORE>** key will cause the team scores to show up on the LCD (TM will show on the LCD to indicate this). Pressing a **<MATCH SCORE>** key will cause the match scores to show on the LCD (MAT will show on the LCD to indicate this).

Match Score (+1/+2/+3/-1)

The home and guest **<MATCH SCORE +1>**, **<MATCH SCORE +2>**, and **<MATCH SCORE +3>** keys are used to increment the team score and the **<MATCH SCORE -1>** key is used to decrement the team score.

Display	Action
MATCH SCORE- +1 HOME NN NN = current setting	Press the appropriate score key to increment or decrement the score for the home or guest team. The LCD shows which key was pressed and the new value for the team score of the corresponding team. Pressing a **<MATCH SCORE>** key will cause the match scores to show on the LCD (MAT will show on the LCD to indicate this). Pressing a **<TEAM SCORE>** key will cause the team scores to show up on the LCD (TM will show on the LCD to indicate this).

Start/Stop Injury Time

Display	Action
H INJURY M:SS AD TM M:SS.T H M:SS = minutes, seconds (injury timer) M:SS.T = minutes, seconds, tenths of a second (advantage timer) G or H = guest or home	The maximum allowed injury time is set for each competitor at the beginning of a match and reset to this time when the Reset Match function is performed. When enabled, the injury times are displayed in the main clock digits, and the corresponding (home or guest) match score digits flash. The main clock must be stopped to use the injury timer. Press **<START INJURY TIME>** to start the injury timer for the home or guest competitor. The injury timer counts down from the maximum allowed time until **<STOP INJURY TIME>** is pressed or 0:00 is reached. The injury time is shown on the LCD display with H for home or G for guest. Press the **<STOP INJURY TIME>** key to stop the injury timer and return the period time to the main clock digits. A key press is required before the main clock digits return to period time. This gives the coach time to see how much injury time remains.

Reset Match

Display	Action
RESET MATCH? Y/N	Press **<YES>** to clear all of the data for the last match or the match in progress and begin a new individual match. Press **<NO>** to resume the match in progress using the current data and exit the Menu.
SELECT WIN HOME *	If weight classes are enabled, it will ask for the winner. Use the arrow keys to select HOME or GUEST, and then press **<ENTER>**. Enter the points for the win, and then press **<ENTER>**.
TOD HH:MM:SS ET M:SS H N G X HH:MM:SS = hours, minutes, seconds (Time of day) M:SS = minutes, seconds (elapsed time) N = home score X = guest score	The console will display the time of day, elapsed time of the match, and points scored in the match. This will display until a key is pressed.

Start/Stop Blood Time

Display	Action
G BLOOD M:SS AD TM M:SS.T >G M:SS = minutes, seconds (blood timer) M:SS.T = minutes, seconds, tenths of a second (advantage timer) G or H = guest or home	The maximum allowed blood time is set for each competitor at the beginning of a match and reset to this time when the Reset Match function is performed. When enabled, the blood times are displayed in the main clock digits and the corresponding (home or guest) match score digits flash. The main clock must be stopped to use the blood timer. Press **<START BLOOD TIME>** to start the blood timer for the home or guest competitor. The injury/blood timer counts down from the maximum allowed time until **<STOP BLOOD TIME>** is pressed or 0:00 is reached. The blood time is shown on the LCD display with H for home or G for guest. Press the **<STOP BLOOD TIME>** key to stop the blood timer and return the period time to the main clock digits. A key press is required before the main clock digits return to period time. This gives the coach time to see how much blood time remains.

Start/Stop Recovery Time

Display	Action
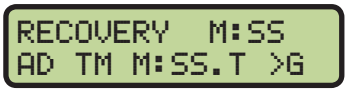 M:SS = minutes, seconds (recovery timer) M:SS.T = minutes, seconds, tenths of a second (advantage timer) G or H = guest or home	The recovery time is set to the configured recovery time for each competitor when the **<START HOME RECOVERY>** or **<START GUEST RECOVERY>** keys are pressed. When enabled, the recovery times are displayed in the main clock digits and the corresponding (home or guest) match score digits flash. The main clock must be stopped to use the recovery timer. After pressing a start recovery key for the home or guest competitor, the recovery timer counts down from the maximum allowed time until **<STOP RECOVERY TIME>** is pressed or 0:00 is reached. Press **<STOP RECOVERY TIME>** to stop the recovery timer and return the period time to the main clock digits.

Edit

Press **<EDIT>** followed by one of the keys below to quickly edit the value.

Home Advantage

Display	Action
 MM:SS.T = minutes, seconds, tenths of a second	Press **<EDIT>** followed by **<HOME (GREEN) ADVANTAGE>** to display the current advantage time for the home competitor. Enter the advantage time for the home competitor using the number pad, and then press **<ENTER>**. Press **<CLEAR>** twice to cancel and return to the game.

Guest Advantage

Display	Action
 MM:SS.T = minutes, seconds, tenths of a second	Press **<EDIT>** followed by **<GUEST (RED) ADVANTAGE>** to display the current advantage time for the guest competitor. Enter the advantage time for the guest competitor using the number pad, and then press **<ENTER>**. Press **<CLEAR>** twice to cancel and return to the game.

Blood Time

Display	Action
BLOOD TIME HOME MM:SS* MM:SS.T = minutes, seconds, tenths of a second	Press **<EDIT>** followed by either **BLOOD TIME** key for the home or guest team to display the current blood time setting. Enter the maximum allowed blood time in minutes and seconds using the number pad, and then press the **<ENTER>** key.

Injury Time

Display	Action
INJURY TIME HOME MM:SS* MM:SS.T = minutes, seconds, tenths of a second	Press **<EDIT>** followed by either **INJURY TIME** key for the home or guest team to display the current injury time setting. Enter the maximum allowed injury time in minutes and seconds using the number pad, and then press the **<ENTER>** key.

Match Number, Period, Team Score, Match Score

The home and guest **<MATCH NUMBER>**, **<PERIOD>**, **<TEAM SCORE>**, and **<MATCH SCORE>** keys are all edited in the same way. **<TEAM SCORE +1>** is used as an example below.

Display	Action
TEAM SCORE- EDIT HOME NNN* NNN = current setting	Press **<EDIT>** followed by the appropriate statistic key to display the current setting. Enter the correct value using the number pad, and then press **<ENTER>**.

Menu

Press **<MENU>** to access general and sport-specific options. Use the up and down arrow keys to scroll through the menu list. Press **<MENU>** again at any time to return to the game in progress.

New Game

Display	Action
MENU- MAIN NEW GAME?	Press **<ENTER>** to clear all data for the current game in progress and begin a new game.

New Code

Display	Action
MENU- MAIN NEW CODE?	Press **<ENTER>** to switch to a different sport code through the **SELECT CODE** prompt. Refer to **Start Up (p. 6)** for more information on sport codes.

Dimming Menu

Refer to **Dimming Menu (p. 15)**.

Home Roster, Guest Roster

Use the **Home Roster** and **Guest Roster** menus to set up team names. **Home Roster** is used as an example below.

Display	Action
MENU- ROSTER SELECT HOME	Press **<ENTER>** to select the Roster submenu.
HOME- TEAM NAME EDIT SETTINGS?	Press **<ENTER>** to select the **Team Name Edit Settings** submenu.
HOME- TEAM NAME SELECT WIDTH	Press **<ENTER>** to select the width (in pixels) of the Team Name Message Centers (TNMC) used on the scoreboard. Select from 16, 32, 48, or 64, and then press **<ENTER>**.
HOME- TEAM NAME SIZE NN NN = current setting	
HOME- TEAM NAME SELECT FONT	On the following menu, press **<ENTER>** and use the left/right arrows to select one of the following fonts for the team name: **8H SINGLE** (single stroke), **8H BOLD** (double stroke), **8H NARROW** (single stroke, alternate narrow), or **8H NARROW BOLD** (double stroke, alternate narrow) After selecting a font type, press **<ENTER>**.
HOME- TEAM NAME 8H SINGLE	
HOME- TEAM NAME _OME *	**Use the TEAM NAME (LL-2441) insert to change the Team Name Message Center (TNMC) settings.** Type in a team name of up to 15 characters and press **<ENTER>**. Refer to **Team Name Entry (p. 19)** for more information.
HOME- TEAM ABBR EDIT SETTINGS?	Press **<ENTER>** to select the **Team Abbreviation Edit Settings** submenu.
HOME- TEAM ABBR SELECT WIDTH	Press **<ENTER>** to select the width (in pixels) of the Team Name Message Centers (TNMC) used on the scoreboard. Select from 16, 32, 48, or 64, and then press **<ENTER>**.
HOME- TEAM ABBR SIZE NN NN = current setting	
HOME- TEAM ABBR SELECT FONT	On the following menu, press **<ENTER>** and use the left/right arrows to select one of the following fonts for the team name: **8H SINGLE** (single stroke), **8H BOLD** (double stroke), **8H NARROW** (single stroke, alternate narrow), or **8H NARROW BOLD** (double stroke, alternate narrow) After selecting a font type, press **<ENTER>**.
HOME- TEAM ABBR 8H SINGLE	

Display	Action
HOME- TEAM ABBR _OME *	Type in a team abbreviation of up to 10 characters and press **<ENTER>**. **Reinsert the WRESTLING (LL-2435) insert to continue.**

Weight Class

Use the **WEIGHT CLASS** menu to enter the weight class values.

Display	Action
MENU- MAIN ENTER WEIGHT CLASS	Press **<ENTER>** to select the Weight Class submenu.
WEIGHT CLASS 01*NNN WIN WEIGHT CLASS 01 NNN* WIN WEIGHT CLASS 01 NNN WIN*HX WEIGHT CLASS 01 NNN WIN HX* NNN = current weight setting G or H = guest or home X = current games won	A total of 14 weight classes may be entered. Use the up/down arrow keys to select the index of the weight class to edit, and press **<ENTER>**. Enter a new value for the weight class, and then press **<ENTER>**. Set the winner of this weight class. This is used mainly for editing a winner that was set to the wrong side. Use the arrow keys to select H or G as the winner, and then press **<ENTER>**. Enter the score for the winner, and then press **<ENTER>**.

Display Menu

Refer to **Display Menu (p. 15)** for more information.

Color Menu

Refer to **Color Menu (p. 16)** for more information.

Time of Day

Refer to **Time of Day (p. 17)** for more information.

Edit Settings

Display	Action
MENU- MAIN EDIT SETTINGS?	From the Main Menu, select the **EDIT SETTINGS** submenu to modify the settings below.

Main Clock

The settings for the Main Clock are used with the **<SET MAIN CLOCK>** key.

The period length is used differently depending on the direction of the main clock. For count down, the main clock is set to the selected length, decrements towards zero, and stops at zero. For count up, the main clock is set to zero, increments towards the selected length, and stops when the selected length is reached.

Display	Action
MAIN CLOCK-MODE TENTH SECOND? Y	When the main clock is set to count down and tenths of a second is selected, the main clock displays in tenths of a second remaining when the time is below one minute. Press **<YES>** to set the main clock to display tenths of a second. Press **<NO>** to display whole seconds.
MAIN CLOCK-TIME PERIOD MM:SS* MM:SS = minutes, seconds	Enter the correct amount of time per period in minutes and seconds using the number pad, and then press **<ENTER>**. **Note:** Pressing **<ENTER>** to select the period time as the main clock setting will increment the current period number if the clock value was previously zero.

Blood/Injury Time

The maximum allowed blood and injury times are set for each competitor at the beginning of a match and reset to these times when the Reset Match function is performed.

When enabled, the blood and injury times are displayed in the main clock digits and the corresponding (home or guest) match score digits flash.

Display	Action
BLOOD TIME RESET MM:SS* MM:SS = minutes, seconds	Enter the cumulative time for blood time outs in minutes and seconds using the number pad, and then press **<ENTER>**.
INJURY TIME RESET MM:SS* MM:SS = minutes, seconds	Enter the cumulative time for injury time outs in minutes and seconds using the number pad, and then press **<ENTER>**.
BLOOD/INJURY SHOWN ON MAIN? N	Press **<YES>** to display the blood, injury, and recovery times on the LCD and the main clock digits of the scoreboard while the blood, injury, or recovery clock is active. Press **<NO>** to display the times on the LCD only.

Recovery Time

The maximum allowed recovery times are set for each competitor at the beginning of a match and reset to these times whenever a recovery clock is activated.

Display	Action
RECOVERY TIME RESET MM:SS* MM:SS = minutes, seconds	Enter the time for recovery time outs in minutes and seconds using the number pad, and then press **<ENTER>**.

Select Captions

Display	Action
SELECT CAPTIONS ON 1←– –→ 2 OFF	This menu option allows for the controlled backlit captions to be turned ON/OFF. Press the **<1>** key to select ON and OFF for captions controlled by control #1. Press the **<2>** key to select ON and OFF for captions controlled by control #2.

Weight Class

Display	Action
WEIGHT CLASS ON Y/N? –OFF	This setting allows the use of weight classes. Press **<YES>** to use weight classes, or press **<NO>** to select not to use weight classes.

Display Lines for Weight Class

Display	Action
# OF DISP LINES N N = current setting	This setting represents the number of lines used on the stat panel displays. It can only be set to 5 or 6. Press the **<5>** or **<6>** key, and then **<ENTER>**.

Display Team Score

Display	Action
DISPLAY NO TEAM SCORE Y/N?	This menu option allows for selection of having the Team Score display on the Matside advantage/team score module. If set to display, it will show team score after the match is reset until an advantage time is started. Press **<YES>** to select display ON. Press **<NO>** to select display OFF.

Shot Horn Control

Display	Action
SHOT HRN CONTROL SET= SHOT HORN	This menu option allows the selection of what will control the output for the shot clock horn. Use the left or right arrow keys to scroll to the desired setting, or use the **<0>** – **<3>** number keys. Press **<ENTER>** when the desired setting is shown. 0 = NO CONTROL, 1 = MAIN HORN, 2 = SHOT HORN, 3 = MAIN & SHOT

Light Control

Display	Action
LIGHT CONTROL SET= CLK=0	This menu option allows the selection of what will control the output for the light strip displays. Use the left or right arrow keys to scroll to the desired setting, or use the **<1>** – **<6>** number keys. Press **<ENTER>** when the desired setting is shown. 1 = CLK=0, 2 = CLK STOP, 3 = (not used), 4 = MAIN HORN, 5 = CLK=0 & HRN, 6 = STOP & HRN

Switch Output

Refer to **Switch Output (p. 18)** for more information.

Default Settings

Print this page if necessary, and record any custom settings for this installation:

Setting	Default	Custom 1	Custom 2	Custom 3	Custom 4
Tenth of a Second	No				
Period Length	3:00				
Period 2 Length	3:00				
Period 3 Length	3:00				
Period 4 Length	3:00				
Period 5 Length	3:00				
Period 6 Length	3:00				
Blood Time	5:00				
Injury Time	2:00				
Blood Show on Main	No				
Recovery Time	2:00				
Select Captions	1-ON				
Weight Class On	No				
# of Display Lines	6				
Display Team Score	No				
Shot Horn Control	Main Horn				
Light Control	Clk=0				
Switch Output	1-Clock = 0				

This page intentionally left blank.

A Reference Drawings

Refer to **Resources (p. 2)** for information regarding how to read the drawing number. Any contract-specific drawings take precedence over the general drawings.

Reference Drawings:

Rear View, A/S 5010 Connector Assignments **DWG-102142**
Block Diagram: AS5000 BB- VB and WR #1 ..... **DWG-124686**
Block Diagram: AS5000 BB- VB and WR #3 ..... **DWG-124688**
Schematic; Dual 1/4" Phone J-Box w/Shunt Jack **DWG-125316**
Block Diagram- A/S 3000 or 5000 BB- VB and WR #2 ..... **DWG-125415**
All Sport 5000, 25pin PCB J-Box Wiring **DWG-125416**
Block Diagram: A/S 3000 or 5000 BB- VB and WR #4 ..... **DWG-125417**
All Sport 5000 Current Loop Output Specifications **DWG-128429**
Channel Selection; Multiple Broadcast Group, Gen IV **DWG-203113**
Installation Details, Gen VI Channel Selection Guide **DWG-1109870**

This page intentionally left blank.

ALL SPORT 5010

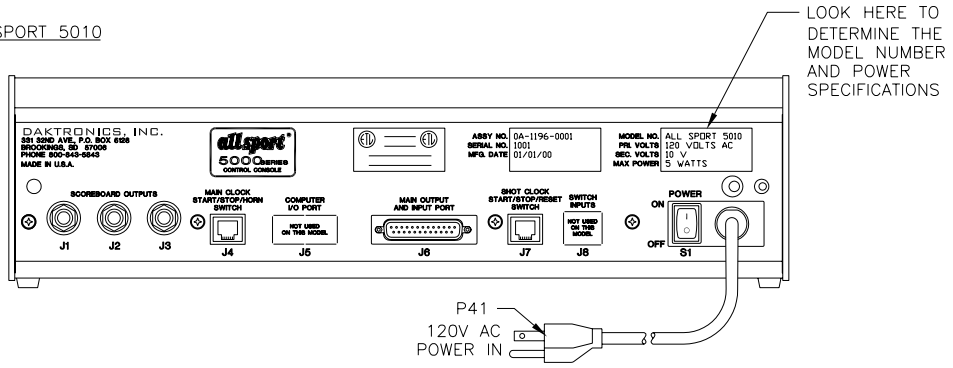

ALL SPORT 5012

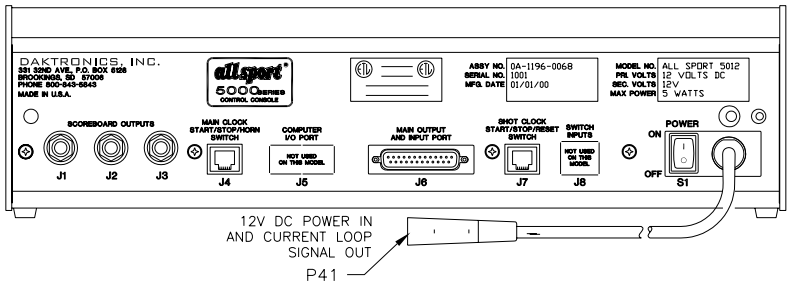

ALL SPORT 5020

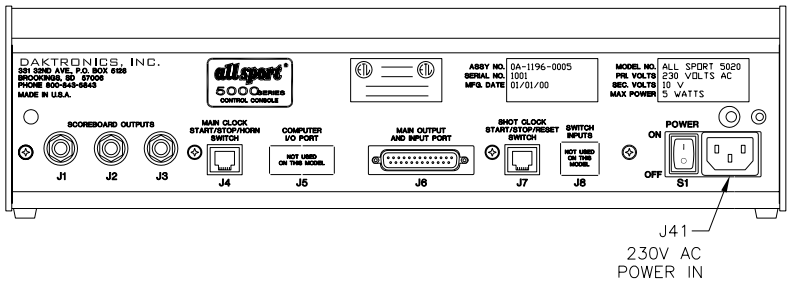

J1–J3 – OUTPUT #1–#3	
CONTACT	FUNCTION
TIP	CURRENT LOOP OUTPUT 1 +
RING	CURRENT LOOP OUTPUT 1 –
SHAFT	GND

J4 – START/STOP/HORN	
PIN #	FUNCTION
1	SWITCH INPUT 2 –
2	SWITCH INPUT 1 –
3	RELAY OUTPUT –
4	RELAY OUTPUT +
5	SWITCH INPUT 1 +
6	SWITCH INPUT 2 +

J6 – MAIN PORT	
PIN #	FUNCTION
1	EARTH
2	RS232 RECEIVE +
3	RS232 TRANSMIT +
4	NOT USED
5	NOT USED
6	NOT USED
7	C. L. OUTPUT 4 –/RS232 GND
8	SWITCH INPUT 1 +
9	CURRENT LOOP INPUT +
10	CURRENT LOOP INPUT –
11	RELAY OUTPUT +
12	NOT USED
13	NOT USED
14	CURRENT LOOP OUTPUT 1 +
15	CURRENT LOOP OUTPUT 1 –
16	CURRENT LOOP OUTPUT 2 +
17	CURRENT LOOP OUTPUT 2 –
18	CURRENT LOOP OUTPUT 3 +
19	CURRENT LOOP OUTPUT 3 –
20	NOT USED
21	SWITCH INPUT 1 –
22	CURRENT LOOP OUTPUT 4 +
23	RELAY OUTPUT –
24	10V AC/DC INPUT–P
25	10V AC/DC INPUT–N

J7 – SHOT/PLAY CLOCK	
PIN #	FUNCTION
1	SWITCH INPUT 5 –
2	SWITCH INPUT 4 –
3	SWITCH INPUT 3 –
4	SWITCH INPUT 3 +
5	SWITCH INPUT 4 +
6	SWITCH INPUT 5 +

FOR STANDARD CODES, THESE FUNCTIONS ARE USUALLY ASSIGNED TO THE FOLLOWING TASKS:

FUNCTION	USUAL TASK
SW IN 1	MAIN CLOCK STOP/START
SW IN 2	MAIN CLOCK HORN
SW IN 3	NOT USED
SW IN 4	SHOT/PLAY CLOCK STOP
SW IN 5	SHOT/PLAY CLOCK RESET
SW OUT	CLOCK STOP OUT
CL OUT 1	SCOREBOARD OUTPUT
CL OUT 2	SCOREBOARD OUTPUT
CL OUT 3	SCOREBOARD OUTPUT
CL OUT 4	DATA STREAM

ALL SPORT 5000 SERIES MODELS	
MODEL #	FUNCTION
5010	120V, STANDARD PROGRAMMING
5020	230V, STANDARD PROGRAMMING

REV.	DATE	DESCRIPTION	BY	APPR.
3	05 OCT 01	ADDED A/S 5012 TO LAYOUT CHANGED DWG SCALE FROM 1=3 TO 1=4	NW	
2	24 APR 99	CHANGED TO BE FOR A/S 5010 CONSOLES ONLY	EB	
1	13 APR 99	ADDED J10 ADDED A/S 5010 LAYOUT	EB	

DAKTRONICS, INC. BROOKINGS, SD 57006

PROJ: ALL SPORT 5000 SERIES CONSOLES

TITLE: REAR VIEW, A/S 5010 CONNECTOR ASSIGNMENTS

DES. BY: EBRAVEK DRAWN BY: EBRAVEK DATE: 27APR98

REVISION

APPR. BY:

SCALE: 1=4

1196-R04A-102142

TYPICAL INSTALLATION SHOWN

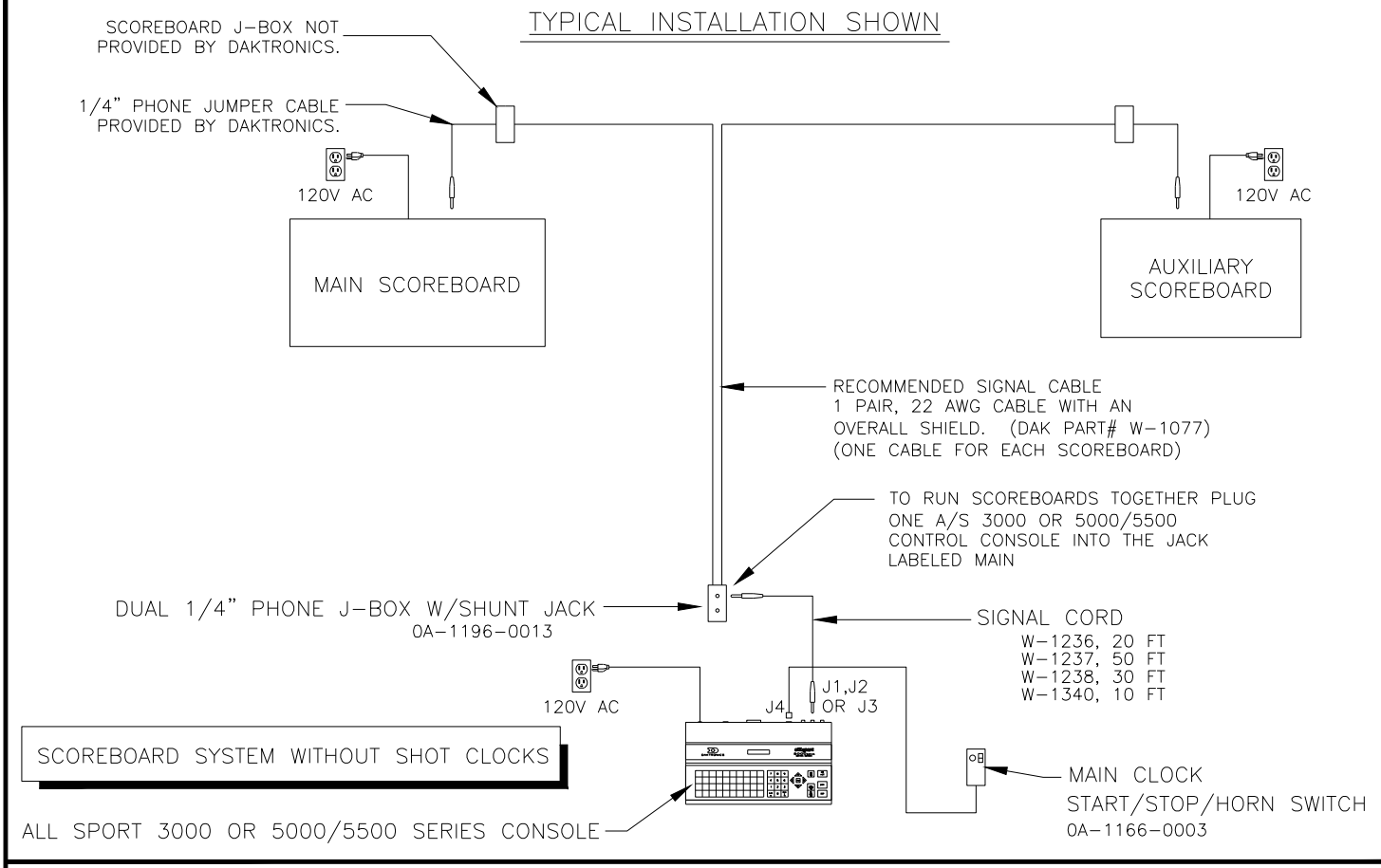

SEPARATE SCOREBOARD CONTROL

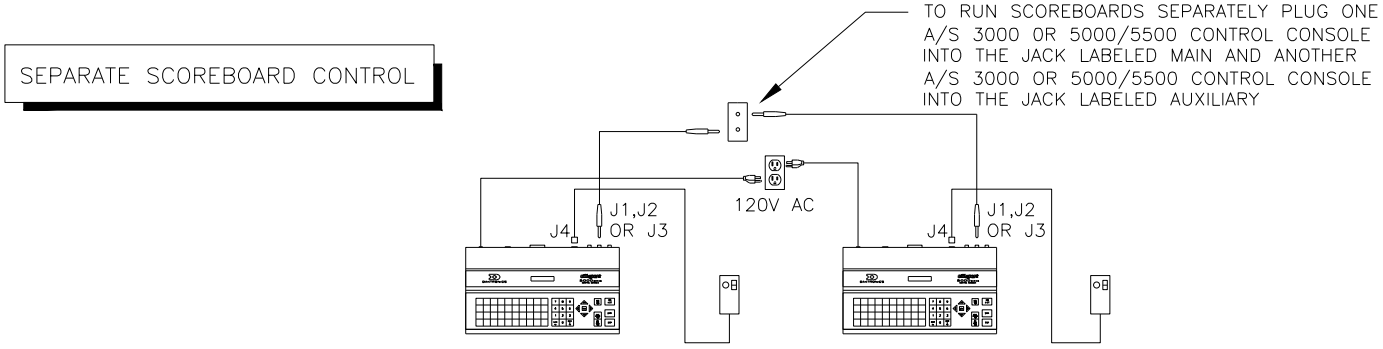

0A-1196-0013 J-BOX

TYPICAL 0A-1196-0013 J-BOX WIRING

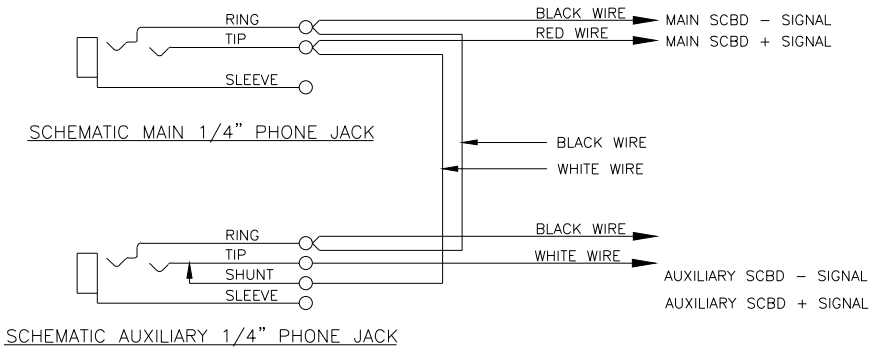

REV	DATE:		BY:
02	17 AUG 11	UPDATED THE BOARDER AND TITLE BLOCK UPDATED TEXT TO INCLUDE 5500 SERIES	JJL
01	26 APR 00	ADDED A/S 3000	DKD

DAKTRONICS, INC.
BROOKINGS, SD 57006
DO NOT SCALE DRAWING

THE CONCEPTS EXPRESSED AND DETAILS SHOWN ON THIS DRAWING ARE CONFIDENTIAL AND PROPRIETARY. DO NOT REPRODUCE BY ANY MEANS WITHOUT THE EXPRESSED WRITTEN CONSENT OF DAKTRONICS, INC. COPYRIGHT 2011 DAKTRONICS, INC.

PROJ: ALL SPORT 5000/5500
TITLE: BLOCK DIAGRAM: AS5000 BB- VB AND WR #1
DESIGN: | DRAWN: E BRAVEK | DATE: 29 NOV 99
SCALE: NONE

SHEET	REV	JOB NO:	FUNC-TYPE-SIZE	
	02	P1196	R-04-A	124686

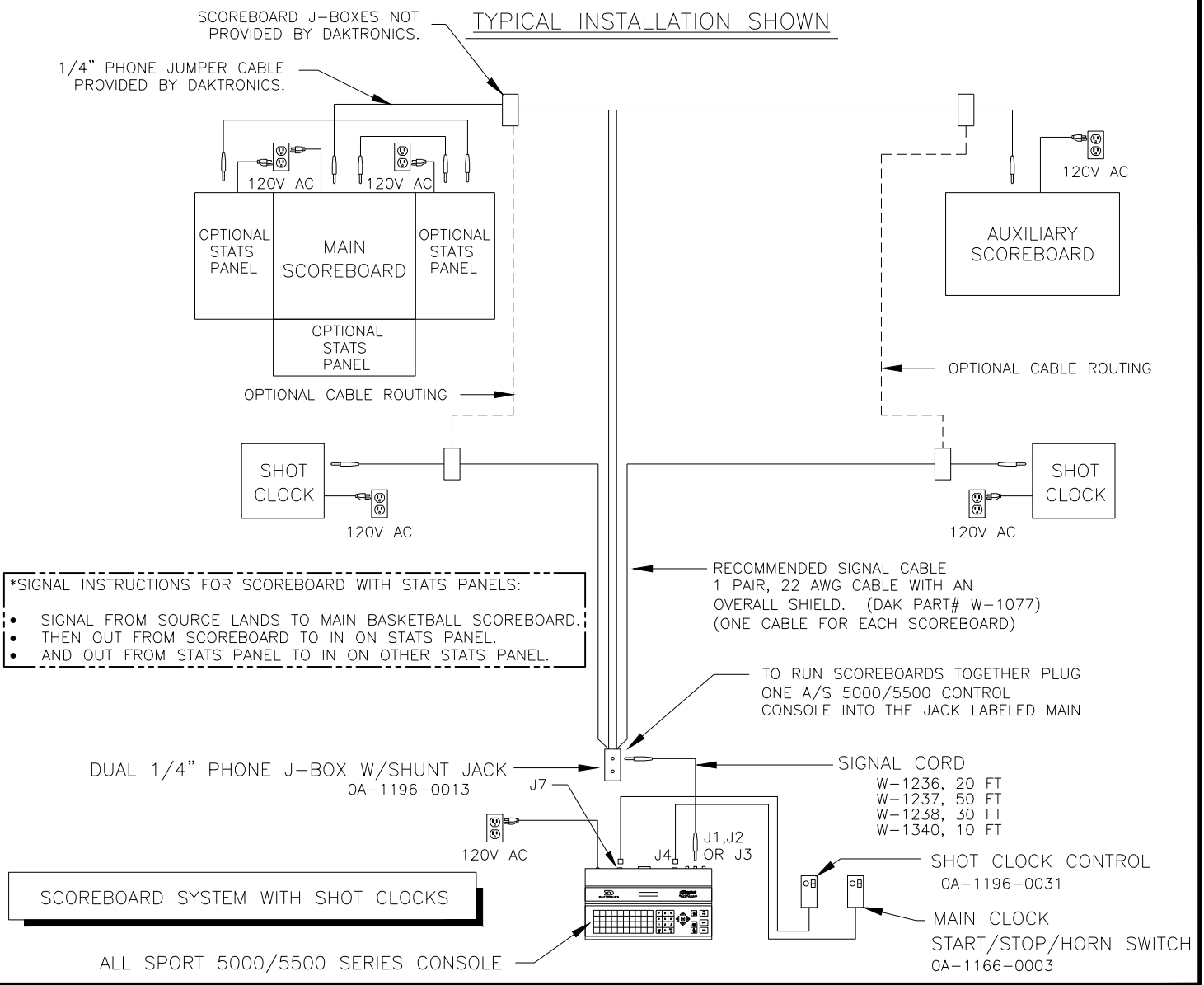

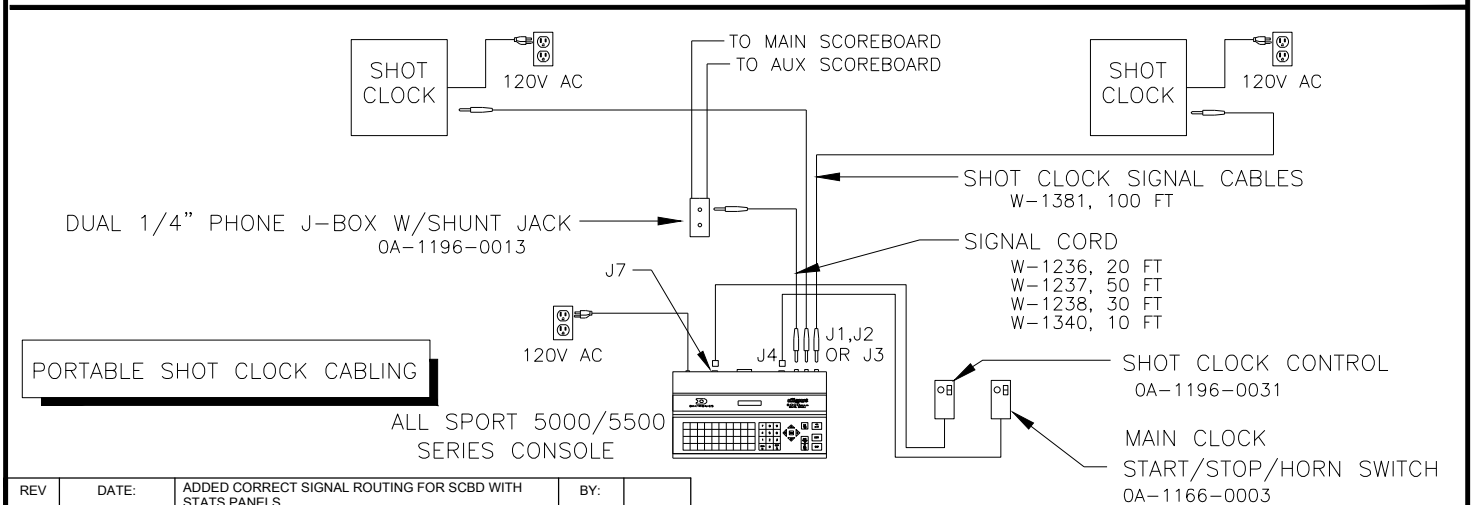

REV	DATE:		BY:	
06	02 MAR 12	ADDED CORRECT SIGNAL ROUTING FOR SCBD WITH STATS PANELS.	SMB	
REV 5	DATE: 17 AUG 11	UPDATED THE BOARDER AND TITLE BLOCK. UPDATED DRAWING TO INCLUDE 5500 SERIES	BY: JJL	
4	17 JAN 02	CHANGED 0A-1166-0004 TO 0A-1196-0031	JJS	
3	06 SEP 01	ADDED BOTTOM OPTIONAL STATS PANEL TO MAIN BOARD, AND ADDED SIGNAL CABLES TO AND FROM OPTIONAL STATS PANELS.	NW	
2	14 DEC 00	ADDED 120VAC TO SIDE BOARDS OF MAIN SCOREBOARD	NSW	
1	29 DEC 99	ADDED SHOT CLOCK REMOTE START/STOP TO TOP A/S5000 CONTROLLER	EB	

DAKTRONICS, INC.
BROOKINGS, SD 57006
DO NOT SCALE DRAWING

THE CONCEPTS EXPRESSED AND DETAILS SHOWN ON THIS DRAWING ARE CONFIDENTIAL AND PROPRIETARY. DO NOT REPRODUCE BY ANY MEANS WITHOUT THE EXPRESSED WRITTEN CONSENT OF DAKTRONICS, INC. COPYRIGHT 2011 DAKTRONICS, INC.

PROJ: ALL SPORT 5000/5500
TITLE: BLOCK DIAGRAM: AS5000 BB- VB AND WR #3
DESIGN:
DRAWN: E BRAVEK
DATE: 29 NOV 99
SCALE: NONE

SHEET	REV	JOB NO:	FUNC-TYPE-SIZE	
	06	P1196	R-04-A	124688

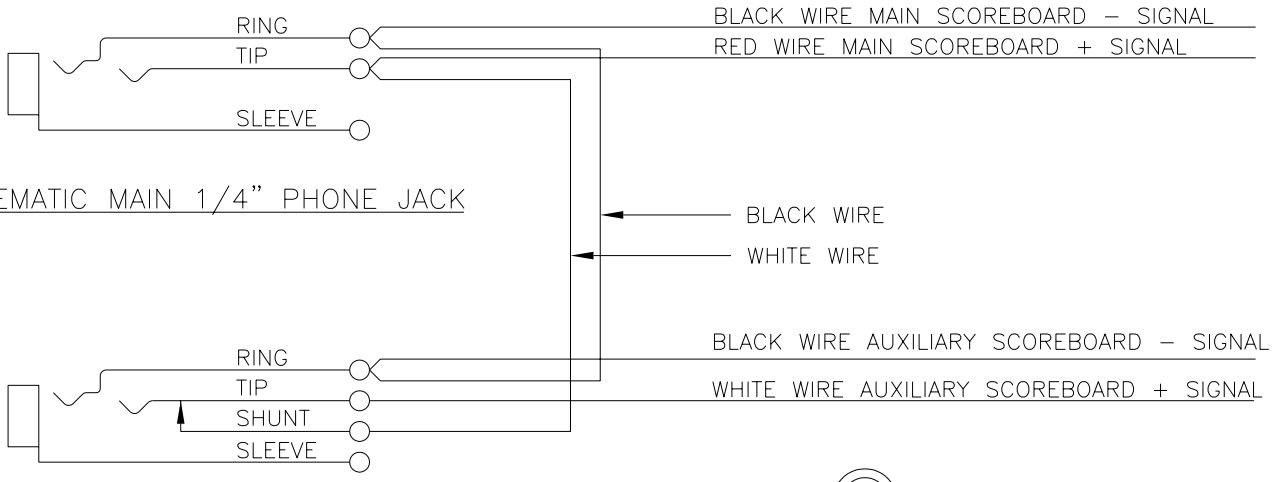

SCHEMATIC MAIN 1/4" PHONE JACK

SCHEMATIC AUXILIARY 1/4" PHONE JACK

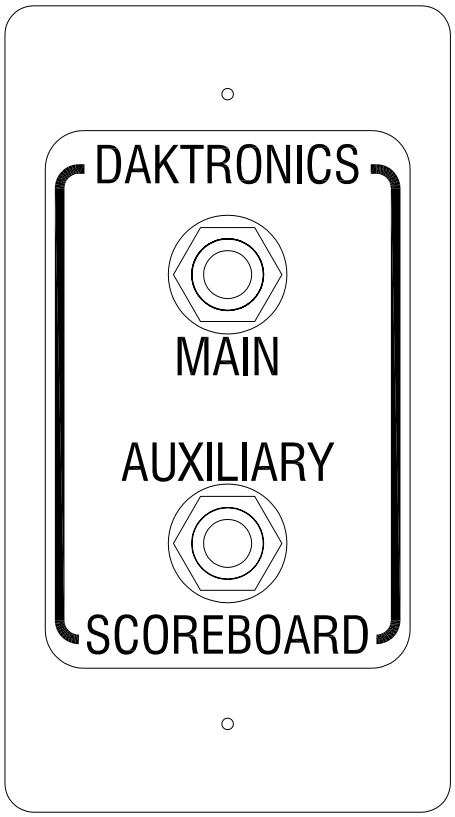

0A–1196–0013

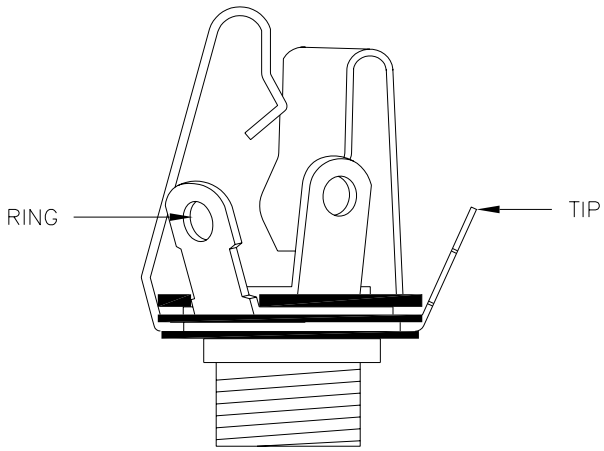

MAIN
PHONE JACK
J–1003

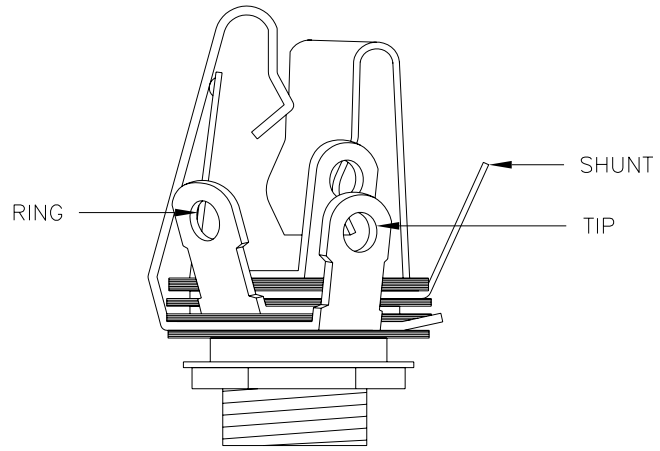

AUXILIARY
PHONE JACK
J–1131

REV.	DATE	DESCRIPTION	BY	APPR.

DAKTRONICS, INC. BROOKINGS, SD 57006

PROJ:

TITLE: SCHEMATIC; DUAL 1/4" PHONE J–BOX W/SHUNT JACK

DES. BY: E BRAVEK DRAWN BY: E BRAVEK DATE: 15 DEC 99

REVISION 00 | APPR. BY: | SCALE: NONE

1196-R03A-125316

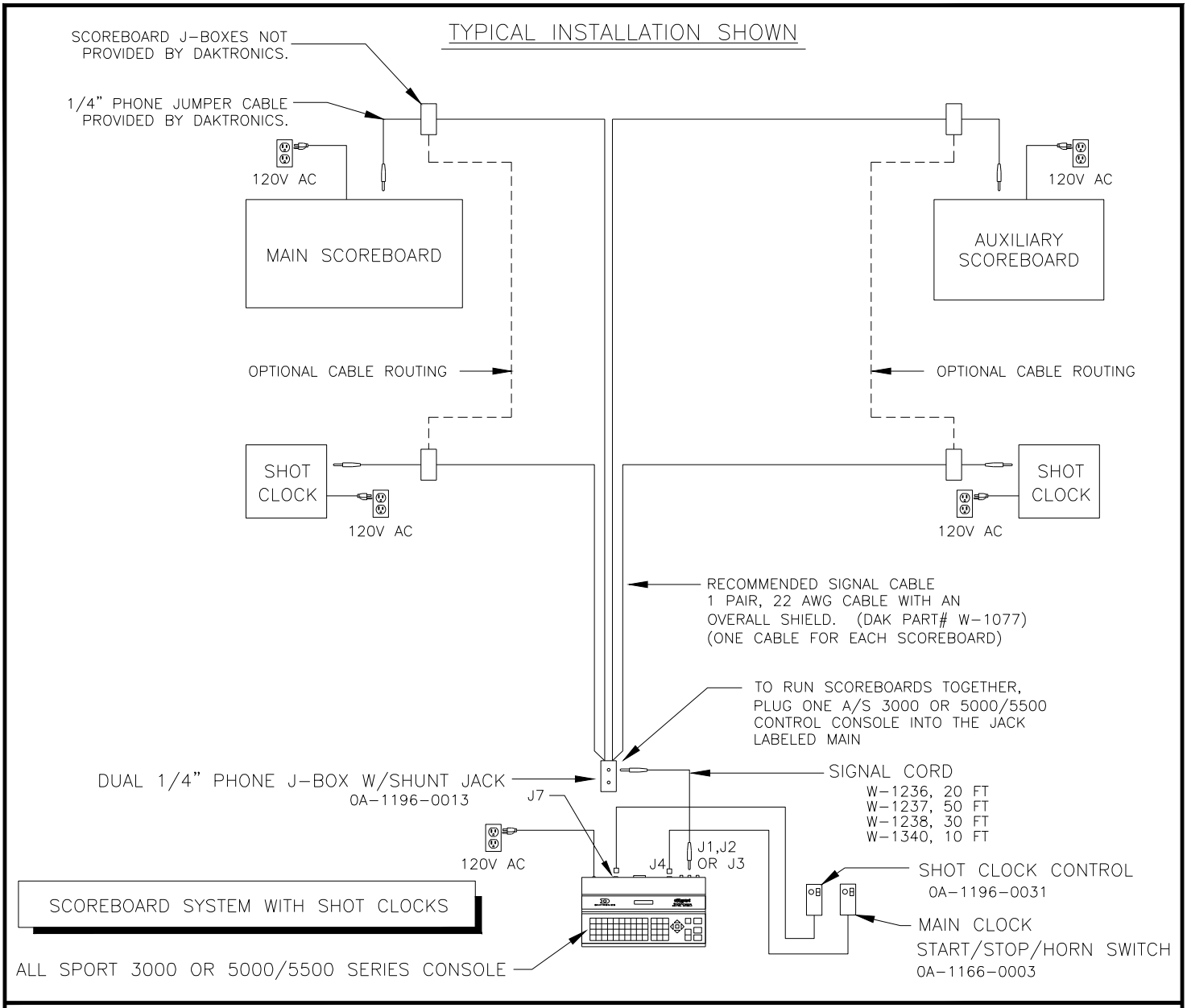

0A-1196-0013 J-BOX

TYPICAL 0A-1196-0013 J-BOX WIRING

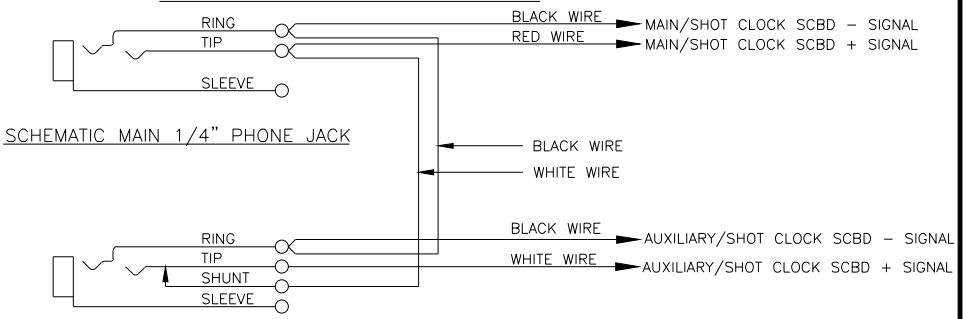

REV	DATE:		BY:
04	24 AUG 11	UPDATED TEXT TO INCLUDE 5500 SERIES UPDATED TITLE BLOCK	JJL
3	17 JAN 02	CHANGED 0A-1166-4 TO 0A-1196-31	JJS
02	26 APR 00	ADDED A/S 3000	DKD
1	29 DEC 99	ADDED SHOT CLOCK REMOTE START STOP TO A/S 5000 CONTROLLER	EB

DAKTRONICS, INC.
BROOKINGS, SD 57006
DO NOT SCALE DRAWING

THE CONCEPTS EXPRESSED AND DETAILS SHOWN ON THIS DRAWING ARE CONFIDENTIAL AND PROPRIETARY. DO NOT REPRODUCE BY ANY MEANS WITHOUT THE EXPRESSED WRITTEN CONSENT OF DAKTRONICS, INC.
COPYRIGHT 2011 DAKTRONICS, INC.

PROJ: ALL SPORT 5000/5500
TITLE: BLOCK DIAGRAM- A/S 3000 OR 5000 BB- VB AND WR #2
DESIGN: | DRAWN: E BRAVEK | DATE: 15 DEC 99
SCALE: NONE

SHEET	REV	JOB NO:	FUNC-TYPE-SIZE	
	04	P1196	R-04-A	125415

STRIP 1/4" OF INSULATION OFF OF EACH WIRE.

INSERT WIRE IN THE CORRECT POSTION.

USING A SMALL FLAT HEAD SCREW DRIVER TIGHTEN THE TERMINAL BLOCK TILL WIRE IS HELD IN PLACE. MAKE SURE TO NOT HAVE ANY EXCESS UNINSULATED WIRE STICKING OUT OF TERMINAL. BLOCK POSITION

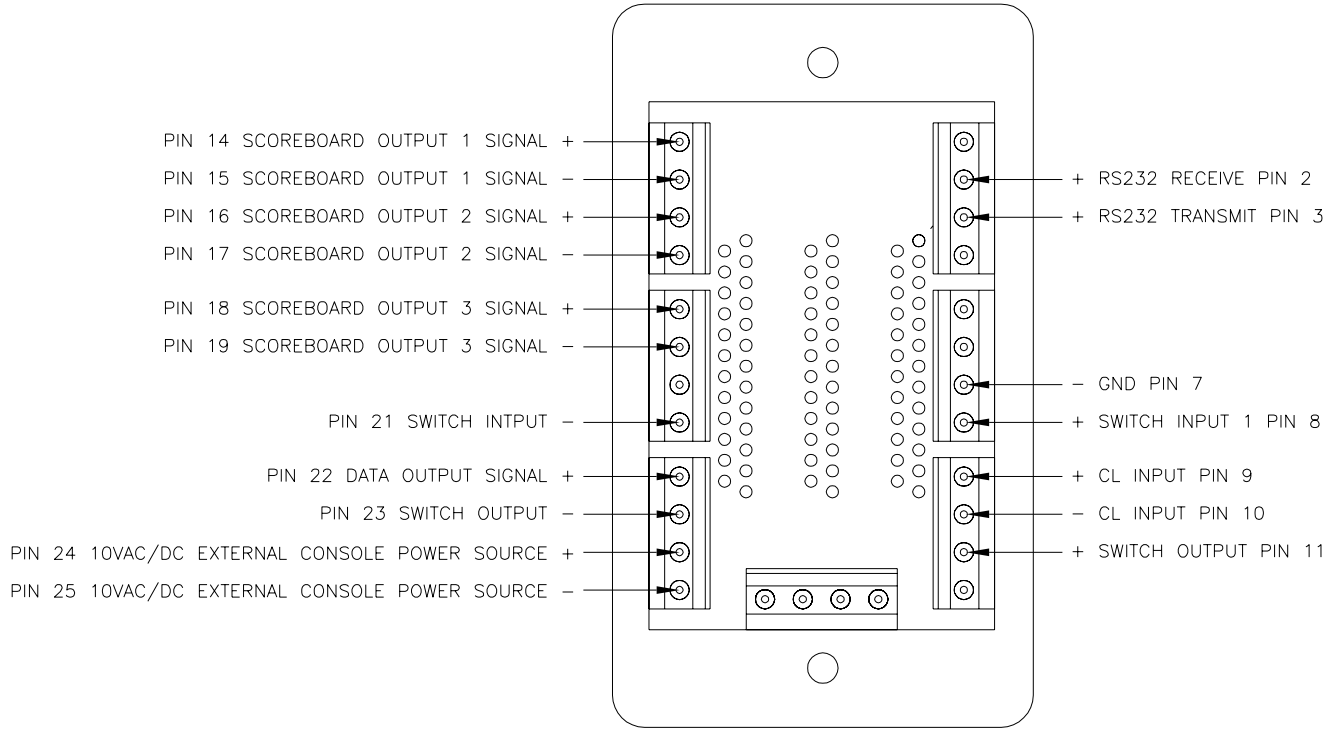

REAR VIEW OF J–BOX
FACEPLATE

REV.	DATE	DESCRIPTION	BY	APPR.

DAKTRONICS, INC. BROOKINGS, SD 57006

PROJ:

TITLE: ALL SPORT 5000, 25PIN PCB J–BOX WIRING

DES. BY: EBRAVEK DRAWN BY: EBRAVEK DATE: 15 DEC 99

APPR. BY:

SCALE: 1=3

REVISION

1196-R01A-125416

04	24 AUG 11	UPDATED DRAWING TO INCLUDE 5500 SERIES UPDATED TITLE BLOCK	JJL
03	18 DEC 08	UPDATED DRAWING WITH PROPER SHIELDING	DKD
02	31 JAN 07	UPDATED DRAWING TO SHOW SECOND ALL SPORT	MWM
01	26 APR 00	ADDED A/S 3000	DKD

TYPICAL INSTALLATION SHOWN

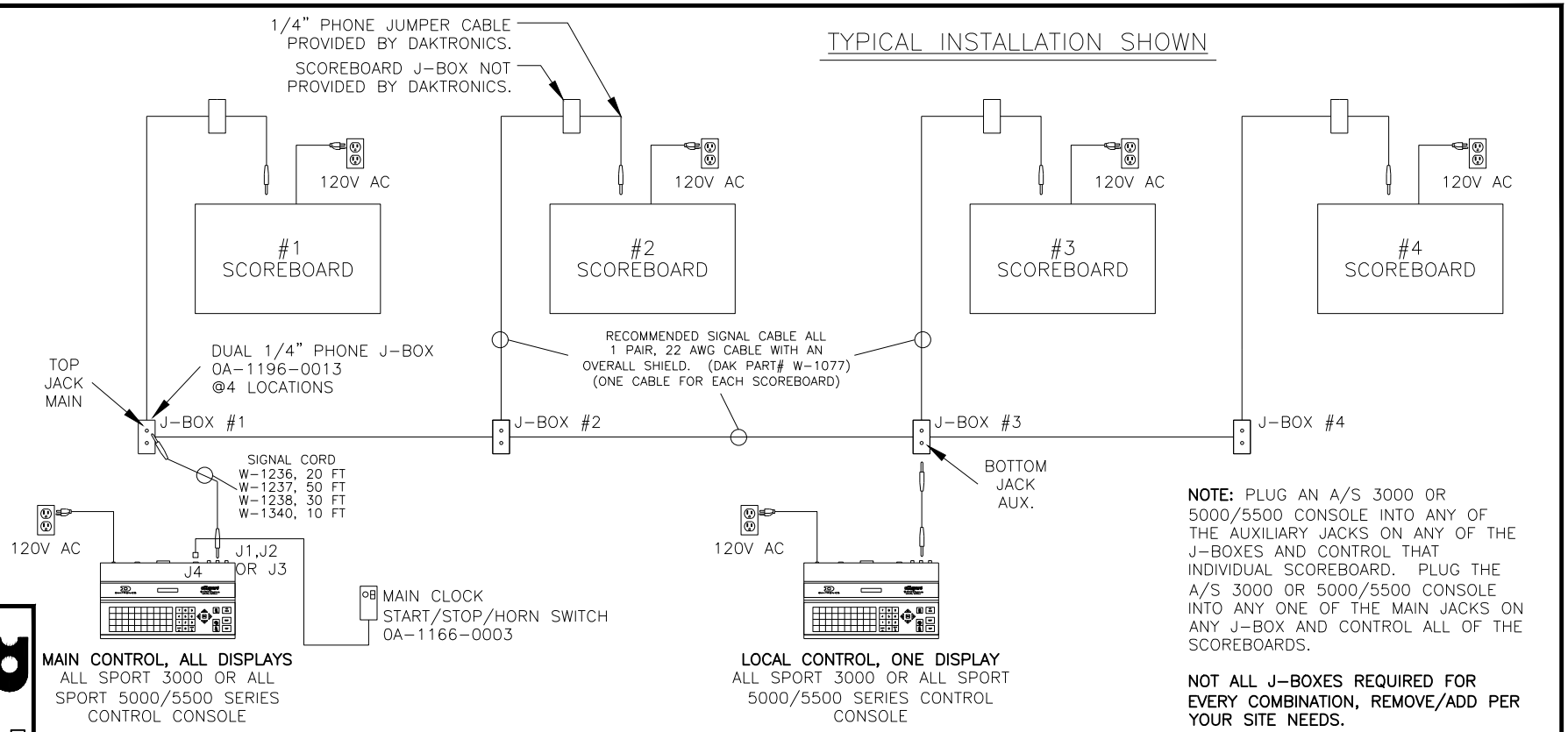

MAIN CONTROL, ALL DISPLAYS
ALL SPORT 3000 OR ALL SPORT 5000/5500 SERIES CONTROL CONSOLE

LOCAL CONTROL, ONE DISPLAY
ALL SPORT 3000 OR ALL SPORT 5000/5500 SERIES CONTROL CONSOLE

NOTE: PLUG AN A/S 3000 OR 5000/5500 CONSOLE INTO ANY OF THE AUXILIARY JACKS ON ANY OF THE J-BOXES AND CONTROL THAT INDIVIDUAL SCOREBOARD. PLUG THE A/S 3000 OR 5000/5500 CONSOLE INTO ANY ONE OF THE MAIN JACKS ON ANY J-BOX AND CONTROL ALL OF THE SCOREBOARDS.

NOT ALL J-BOXES REQUIRED FOR EVERY COMBINATION, REMOVE/ADD PER YOUR SITE NEEDS.

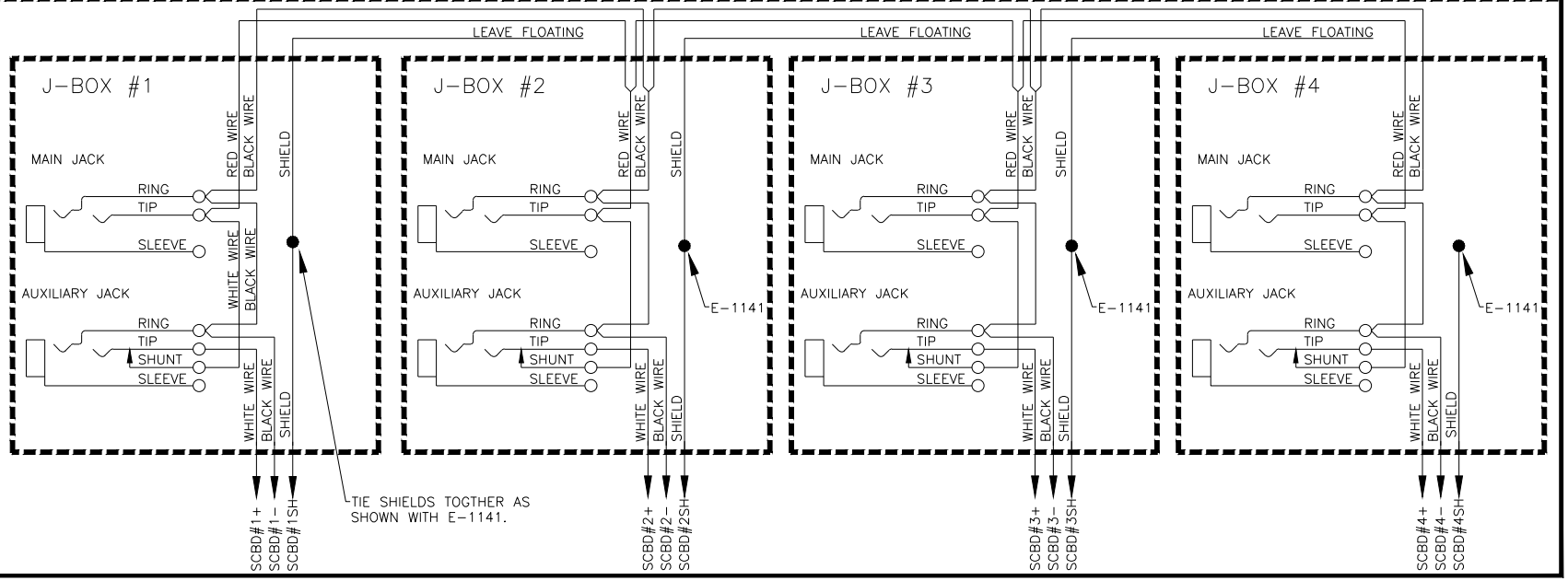

DAKTRONICS, INC.
BROOKINGS, SD 57006

DO NOT SCALE DRAWING

THE CONCEPTS EXPRESSED AND DETAILS SHOWN ON THIS DRAWING ARE CONFIDENTIAL AND PROPRIETARY. DO NOT REPRODUCE BY ANY MEANS WITHOUT THE EXPRESSED WRITTEN CONSENT OF DAKTRONICS, INC. COPYRIGHT 2011 DAKTRONICS, INC.

PROJ: ALL SPORT 5000/5500
TITLE: BLOCK DIAGRAM: A/S 3000 OR 5000 BB- VB AND WR #4
DESIGN: EBRAVEK
DRAWN: EBRAVEK
DATE: 24 JAN 00
SCALE: NONE

SHEET	REV	JOB NO:	FUNC-TYPE-SIZE
	04	P1196	R-01-A

12541 7

DETAIL "A"

RECOMMENDED MAXIMUM CABLE LENGTH WITH ONE RUN AS SHOWN = 2000'

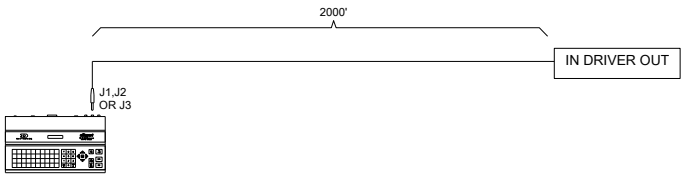

DETAIL "B"

RECOMMENDED MAXIMUM CABLE LENGTH WITH COMBINATION OF TWO RUNS
FROM EITHER THE ALL SPORT 5000 OUTPUT OR ONE OUTPUT WITH 6 DRIVERS. REDRIVE CIRCUIT AS SHOWN = 2000'
MAXIMUM REDRIVES ALLOWED: 6 FOR CLOCK DISPLAYS ALL LOCATED WITHIN THE SAME AREA, I.E. STADIUM OR ARENA

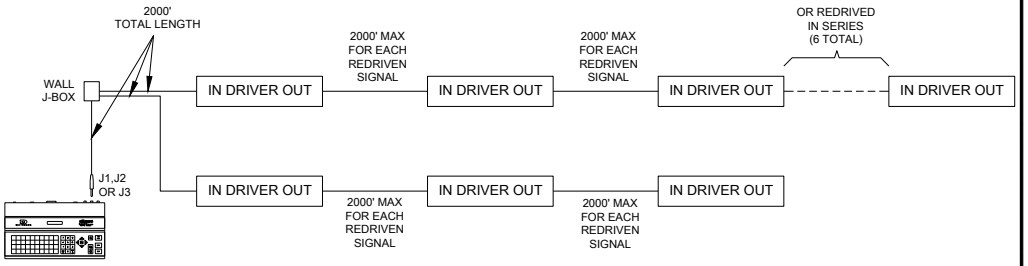

DETAIL "C"

RECOMMENDED MAXIMUM CABLE LENGTH WITH
FROM EITHER THE ALL SPORT 5000 OUTPUT OR DRIVER REDRIVE CIRCUIT AS SHOWN = 2000'
MAXIMUM REDRIVES ALLOWED: TO ANY NUMBER OF DEVICES WHILE UTILIZING SIGNAL IN/OUT REDRIVE
FOR LOCKER ROOM CLOCK ONLY

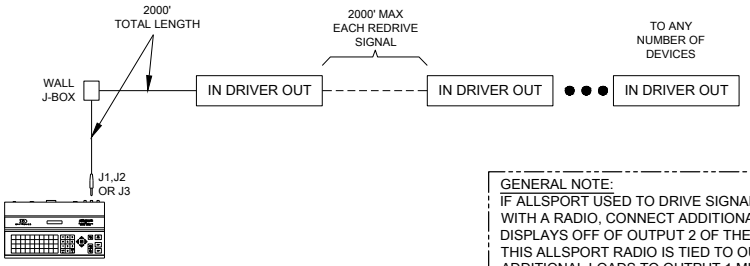

GENERAL NOTE:
IF ALLSPORT USED TO DRIVE SIGNAL IS EQUIPPED WITH A RADIO, CONNECT ADDITIONAL HARD WIRED DISPLAYS OFF OF OUTPUT 2 OF THE ALLSPORT. THIS ALLSPORT RADIO IS TIED TO OUTPUT 1. SO ADDITIONAL LOADS TO OUTPUT 1 MUST TO LIMITED.

DETAIL "D"

RECOMMENDED MAXIMUM PARALLEL LOADS ON REDRIVE CIRCUIT OR ALL SPORT 5000 OUTPUT = 6 SERIES LOADS

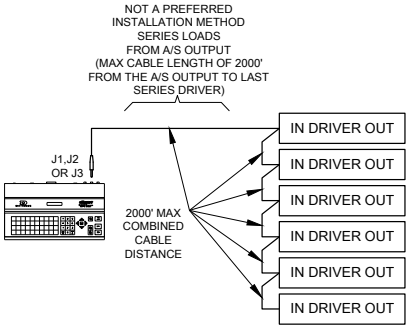

DETAIL "E"

RECOMMENDED MAXIMUM PARALLEL LOADS ON REDRIVE CIRCUIT
OR ALL SPORT 5000 OUTPUT = 6 PARALLEL LOADS
FOR CLUSTERED DISPLAYS IN THE SAME STADIUM/ARENA

SIGNAL TO MULTI DRIVER DISPLAYS SHOULD
ALWAYS TERMINATE TO THE CLOCK SECTION
UNLESS APPROVED BY ENGINEER

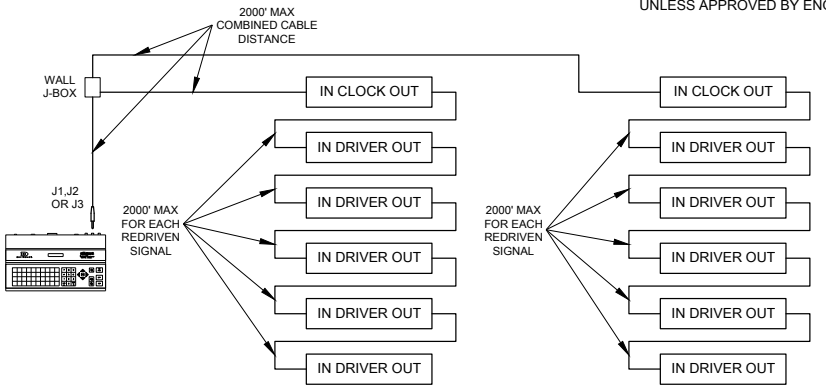

DETAIL "F"

RECOMMENDED MAXIMUM PARALLEL LOADS ON REDRIVE CIRCUIT OR ALL SPORT 5000 OUTPUT = 6 PARALLEL LOADS

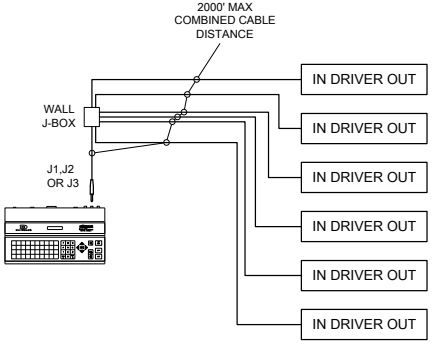

REV	DATE:	UPDATED DETAIL B AND D ADDED DETAIL C, E & F	BY:
02	20 APR 17		MTR

THE CONCEPTS EXPRESSED AND DETAILS SHOWN ON THIS DRAWING ARE CONFIDENTIAL AND PROPRIETARY. DO NOT REPRODUCE BY ANY MEANS WITHOUT THE EXPRESS WRITTEN CONSENT OF DAKTRONICS, INC. OR ITS WHOLLY OWNED SUBSIDIARIES. COPYRIGHT 2017 DAKTRONICS, INC. (USA)

THIRD ANGLE PROJECTION

PROJECT:			
TITLE:	ALL SPORT 5000 CURRENT LOOP OUTPUT SPECIFICATIONS		
DATE: 26 FEB 00	DIM UNITS: INCHES [MILLIMETERS]	SHEET	REV
SCALE:	DO NOT SCALE DRAWING		02
DESIGN:	JOB NO.	FUNC - TYPE - SIZE	128429
DRAWN: EBRAVEK	P1196	R - 01 - B	

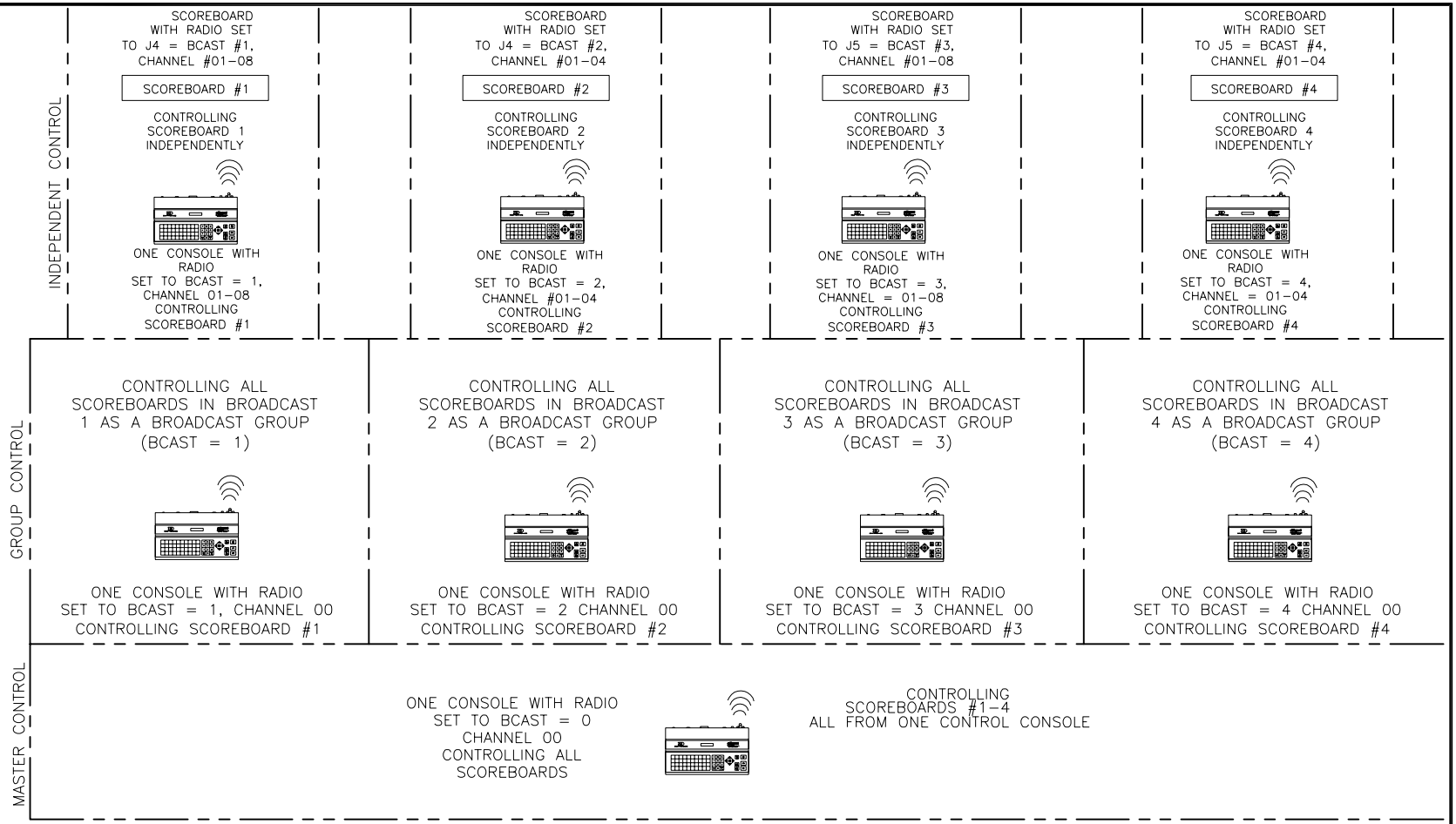

ADVANCED SETUP CONFIGURATIONS: INDEPENDENT SCOREBOARDS, GROUPED SCOREBOARDS, OR OVERALL MASTER CONTROLLED SCOREBOARDS.

A TYPICAL SCENARIO FOR THIS SETUP IS A BASKETBALL COURT THAT CAN BE RUN IN FULL COURT AND HALF COURT SETUP. THE INFORMATION BELOW WILL APPLY TO ANY SET OF SCOREBOARDS THAT NEED TO HAVE MULTIPLE CONTROL OPTIONS.

EACH SCOREBOARD RADIO RECEIVER WILL NEED TO BE SETUP; THERE ARE 4 BROADCAST GROUPS THAT CAN BE USED, BROADCAST 1 AND 3 CAN USE UP TO 8 CHANNELS (1–8), BROADCAST 2 AND 4 CAN USE UP TO 4 CHANNELS (1–4). J4 AND J5 ARE USED TO SELECT THE BROADCAST GROUP. J4 IS USED TO SELECT BROADCAST GROUPS 1 AND 2. J5 IS USED TO SELECT BROADCAST GROUP 3 AND 4. USE THE ROTARY DIAL ON THE RADIO TO SELECT THE CHANNEL. REFER TO DRAWING 1110–R01A–203543 OR 1110–R01A–203542 FOR BROADCAST AND CHANNEL SETTING INSTRUCTIONS.

FOR ALL SCOREBOARDS IN ONE BROADCAST GROUP, SET J4 OR J5 OF THE RADIO TO THE DESIRED BROADCAST GROUP (1–4) AND SET THE CHANNEL NUMBER TO THE CORRESPONDING SCOREBOARD CHANNEL. IT MAY BE NECESSARY TO CHANGE THE CHANNEL ON THE SCOREBOARD, IF A CHANNEL OTHER THAN WHAT IS SET IS NEEDED (REFER TO DRAWING 1110–R01A–203543 OR 1110–R01A–203542 FOR SCOREBOARD CHANNEL SETTING INSTRUCTIONS). EACH RADIO WITHIN THE SAME BROADCAST GROUP MUST BE SET TO A DIFFERENT CHANNEL NUMBER FROM 1–8 FOR GROUPS 1 AND 3 (CHANNELS 1–4 FOR BROADCAST GROUPS 2 AND 4).

MASTER CONTROL
TO RUN ALL SCOREBOARDS AT ONCE; SET THE CONTROL CONSOLE TO BCAST = 0, CHANNEL = 00.

GROUP CONTROL
TO RUN ALL SCOREBOARDS IN BROADCAST GROUP 1 AT ONCE SET THE CONTROL CONSOLE TO BCAST = 1, CHANNEL = 00
TO RUN ALL SCOREBOARDS IN BROADCAST GROUP 2 AT ONCE SET THE CONTROL CONSOLE TO BCAST = 2, CHANNEL = 00
TO RUN ALL SCOREBOARDS IN BROADCAST GROUP 3 AT ONCE SET THE CONTROL CONSOLE TO BCAST = 3, CHANNEL = 00
TO RUN ALL SCOREBOARDS IN BROADCAST GROUP 4 AT ONCE SET THE CONTROL CONSOLE TO BCAST = 4, CHANNEL = 00

INDEPENDENT CONTROL
TO RUN EACH SCOREBOARD INDEPENDENTLY, SET THE CONTROL CONSOLE TO THE APPROPRIATE BROADCAST GROUP (BCAST = 1–4), AND THEN SET THE CHANNEL TO THE SCOREBOARD CHANNEL. EX. TO RUN SCOREBOARD #3 IN THE SETUP ILLUSTRATED ABOVE, SET THE CONTROL CONSOLE TO BCAST = 3, CHANNEL = 01.

REV.	DATE	DESCRIPTION	BY	APPR.
00				

THE CONCEPTS EXPRESSED AND DETAILS SHOWN ON THIS DRAWING ARE CONFIDENTIAL AND PROPRIETARY. DO NOT REPRODUCE BY ANY MEANS, INCLUDING ELECTRONICALLY WITHOUT THE EXPRESSED WRITTEN CONSENT OF DAKTRONICS, INC. COPYRIGHT 2002 DAKTRONICS, INC.

DAKTRONICS, INC. BROOKINGS, SD 57006

PROJ: ALL SPORT RADIO

TITLE: CHANNEL SELECTION; MULTIPLE BROADCAST GROUP, GEN IV

DES. BY: RTAGTOW DRAWN BY: RTAGTOW DATE: 26 JAN 04

REVISION APPR. BY: MMILLER SCALE: NONE

1110-R01A-203113

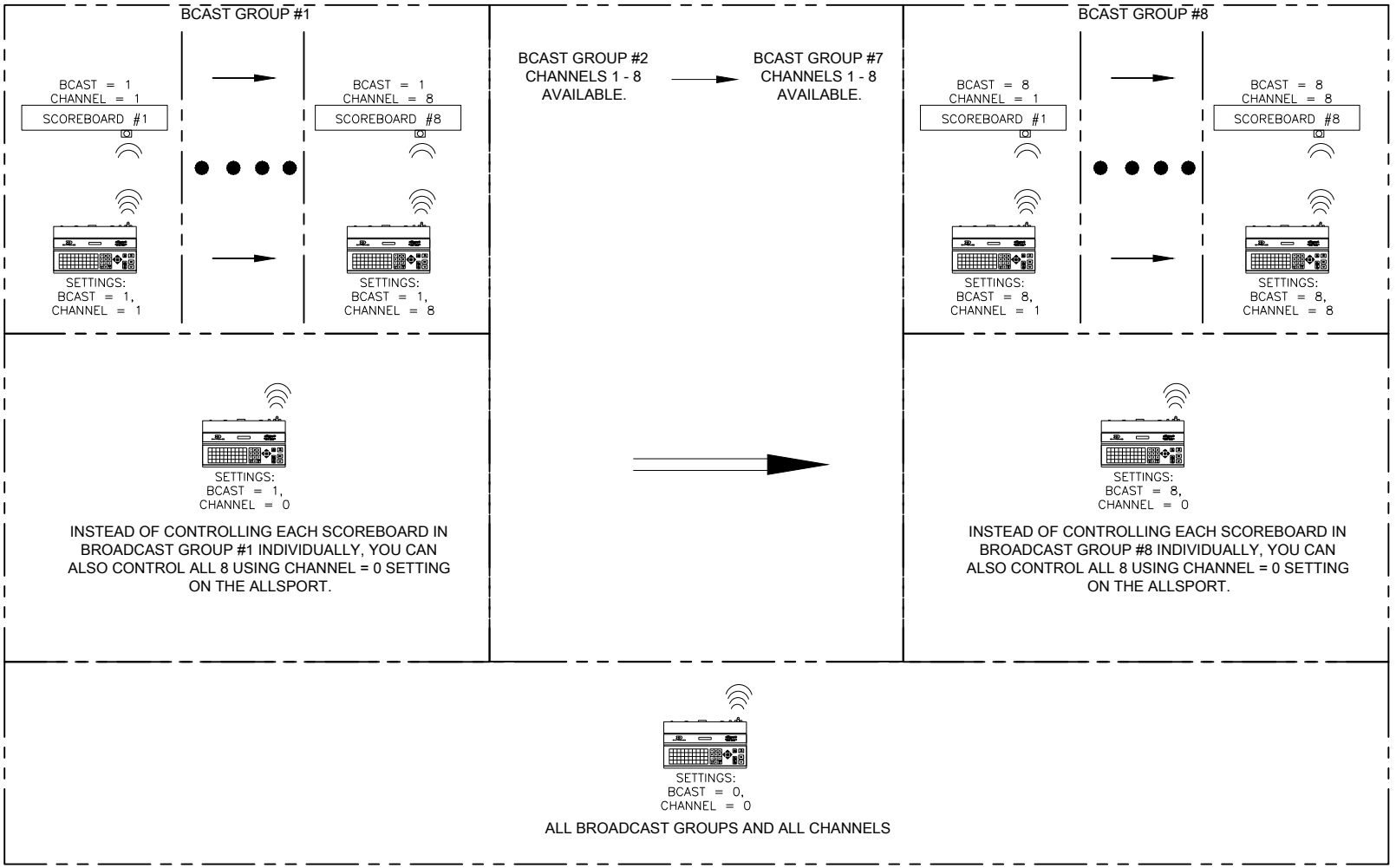

ADVANCED SETUP CONFIGURATIONS:
- 1 CONSOLE HAS 64 CHANNELS. USING IT AS A MASTER CONTROL:
  *RUNS ALL SCOREBOARDS AT ONCE
  *CONSOLE RADIO SETTING: BCAST = 0, CHANNEL = 0

- 1 CONSOLE CAN ALSO CONTROL JUST 8 CHANNELS IN A SELECTED GROUP. GROUP CONTROL:
  *RUNS ALL SCOREBOARDS ASSIGNED TO BCAST X AND CHANNELS 1 - 8. X COULD BE BCAST GROUP 1, OR 2, OR... 8
  *CONSOLE RADIO SETTING: BCAST = X, CHANNEL = 0. X COULD BE BCAST GROUP 1, OR 2, OR... 8

- 1 CONSOLE CAN ALSO CONTROL JUST 1 CHANNEL IN A SELECTED GROUP. INDIVIDUAL CONTROL:
  *RUNS ALL SCOREBOARDS ASSIGNED TO BCAST X AND CHANNEL Y. X COULD BE BCAST GROUP 1, OR 2, OR.. 8. Y COULD BE CHANNEL 1, OR 2, OR.... 8
  *CONSOLE RADIO SETTING: BCAST = X, CHANNEL = Y. X COULD BE BCAST GROUP 1, OR 2, OR.. 8. Y COULD BE CHANNEL 1, OR 2, OR.... 8

NOTE: TO FIND THE SCOREBOARD RADIO SETTING:
- MAKE SURE THE CONSOLE IS TURNED OFF.
- CYCLE POWER TO THE SCOREBOARD
- WATCH THE DIGITS AS THE SCOREBOARD BOOTS UP. YOU WILL SEE A B X AND C Y APPEAR ON THE DIGITS.

DAKTRONICS, INC.
BROOKINGS, SD 57006
DO NOT SCALE DRAWING

THE CONCEPTS EXPRESSED AND DETAILS SHOWN ON THIS DRAWING ARE CONFIDENTIAL AND PROPRIETARY. DO NOT REPRODUCE BY ANY MEANS WITHOUT THE EXPRESSED WRITTEN CONSENT OF DAKTRONICS, INC.
COPYRIGHT 2012 DAKTRONICS, INC.

PROJ: RADIO LINK, GEN VI
TITLE: INSTALLATION DETAILS, GEN VI CHANNEL SELECTION GUIDE
DESIGN: JCOSE
DRAWN: MMILLER
DATE: 14 AUG 12
SCALE: NONE

SHEET	REV	JOB NO:	FUNC-TYPE-SIZE
00	P1110	F - 01 - A	

1109870

B Sport Inserts

Refer to **Resources (p. 2)** for information regarding how to read the drawing number.

Reference Drawings:

Insert, Basketball, LL-2433 ..... **DWG-120121**
Insert; LL-2435 A/S 5000, Wrestling **DWG-124701**
Insert; LL-2434 A/S 5000, Volleyball **DWG-125055**
Insert; LL-2441 A/S 5000, Team Name **DWG-125290**
Insert; LL-2475 A/S 5000, Segment Timer **DWG-129357**

This page intentionally left blank.

REV.	DATE	DESCRIPTION	BY	APPR.
07	30 MAR 04	ADDED CODE 1301 MATSIDE	RDS	
06	24 FEB 04	UPDATED REVISION TEXT TO MATCH SPEC DWG	DJU	
05	19 FEB 04	ADDED CLEAR TEAM FOULS KEY	DJU	

DAKTRONICS, INC. BROOKINGS, SD 57006

PROJ: ALL SPORT 5000 SERIES CONSOLE

TITLE: INSERT, BASKETBALL, LL-2433

DES. BY: AVB DRAWN BY: A VANBEMMEL DATE: 11 AUG 99

REVISION 07 APPR. BY: SCALE: 1=1

1196-E07A-120121

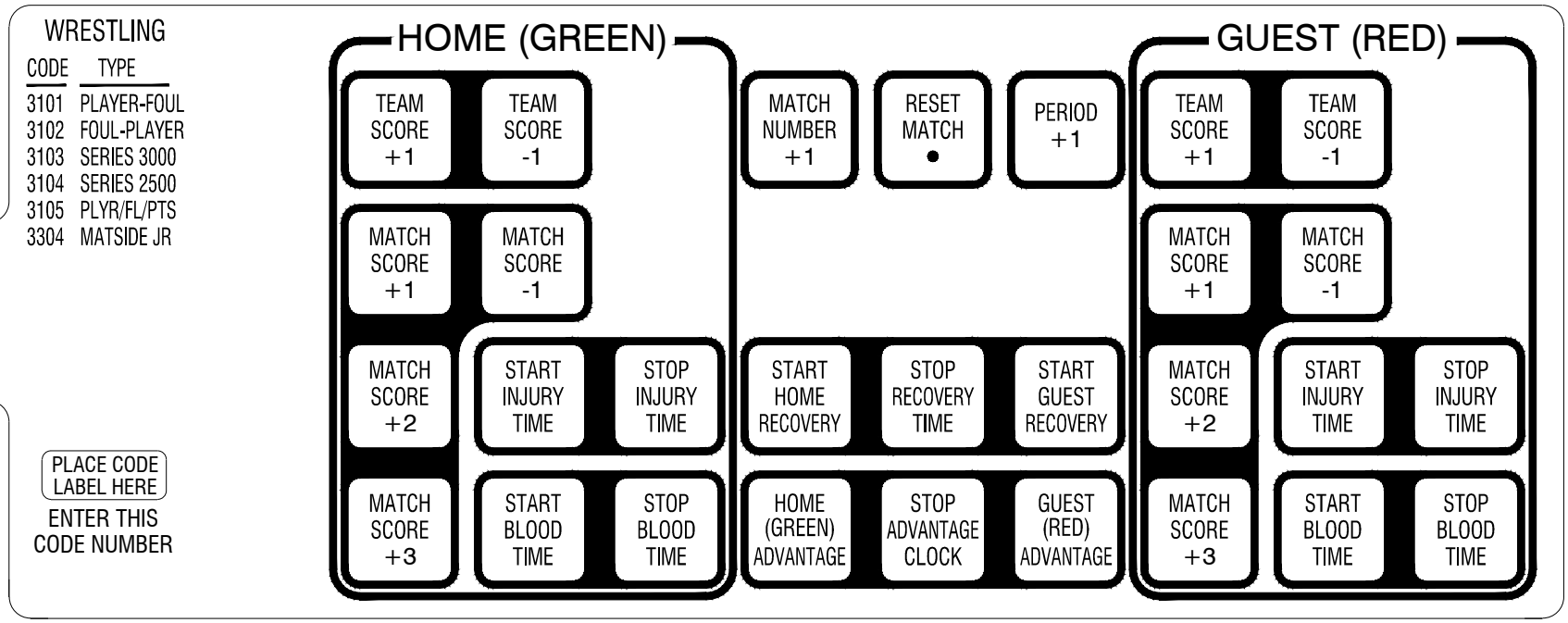

LL-2435 REV 04

REV	DATE:		BY:
04	17 MAR 06	ADDED RECOVERY TIME KEYS	DJU
03	26 JULY 00	ADDED CODE 3105 PLYR/FL/PTS	EB
02	27 DEC 99	ADDED CODE LABEL LOCATION	EB
01	06 DEC 99	ADDED CODE NUMERS	EB

DAKTRONICS, INC.
BROOKINGS, SD 57006
DO NOT SCALE DRAWING

THE CONCEPTS EXPRESSED AND DETAILS SHOWN ON THIS DRAWING ARE CONFIDENTIAL AND PROPRIETARY. DO NOT REPRODUCE BY ANY MEANS WITHOUT THE EXPRESSED WRITTEN CONSENT OF DAKTRONICS, INC. COPYRIGHT 2010 DAKTRONICS, INC.

PROJ: ALL SPORT 5000 SERIES CONSOLE
TITLE: INSERT; LL-2435 A/S 5000, WRESTLING
DESIGN: AVB
DRAWN: A VANBEMMEL
DATE: 19 NOV 99
SCALE: 1=1

SHEET	REV	JOB NO:	FUNC-TYPE-SIZE
	04	P1196	E-07-A

124701

REV	DATE:		BY:
05	16 JAN 12	ADDED "SUBS +1" KEYS TO HOME AND GUEST SECTIONS. EDITED SECTION OUTLINES	DJU
04	09 FEB 10	CHANGED GAMES TEXT TO SET	DJU
03	30 MAR 03	ADDED CODE 2301 MATSIDE	RDS
02	26 JULY 00	ADDED CODE 2105 PLYR/FL/PTS	EB

REV	DATE:	ADDED CODE LABEL LOCATION	BY:
01	27 DEC 99		EB

DAKTRONICS, INC.
BROOKINGS, SD 57006
DO NOT SCALE DRAWING

THE CONCEPTS EXPRESSED AND DETAILS SHOWN ON THIS DRAWING ARE CONFIDENTIAL AND PROPRIETARY. DO NOT REPRODUCE BY ANY MEANS WITHOUT THE EXPRESSED WRITTEN CONSENT OF DAKTRONICS, INC. COPYRIGHT 2010 DAKTRONICS, INC.

PROJ: ALL SPORT 5000 SERIES CONSOLE
TITLE: INSERT; LL-2434 A/S 5000, VOLLEYBALL
DESIGN: EB
DRAWN: E BRAVEK
DATE: 06 DEC 99
SCALE: 1=1
SHEET
REV: 05
JOB NO: P1196
FUNC-TYPE-SIZE: E-07-A

125055

REV	DATE:		BY:
01	11 FEB 08	ADDED "&" SYMBOL TO INSERT	JMC

DAKTRONICS, INC.
BROOKINGS, SD 57006

DO NOT SCALE DRAWING

PROJ: ALL SPORT 5000

TITLE: INSERT; LL-2441 A/S 5000, TEAM NAME

DESIGN: EB

DRAWN: E BRAVEK

DATE: 13 DEC 99

SCALE: 1=1

SHEET	REV	JOB NO:	FUNC-TYPE-SIZE
	01	P1196	E-07-A

125290

THE CONCEPTS EXPRESSED AND DETAILS SHOWN ON THIS DRAWING ARE CONFIDENTIAL AND PROPRIETARY. DO NOT REPRODUCE BY ANY MEANS WITHOUT THE EXPRESSED WRITTEN CONSENT OF DAKTRONICS, INC.
COPYRIGHT 2010 DAKTRONICS, INC.

SEGMENT TIMER

ACCESS THROUGH MENU
FROM WITHIN SPORT CODE

PRESS [MENU]

PRESS ▽ UNTIL

DISPLAY MENU?

PRESS [ENTER YES]

SEGMENT TIMER Y/N

PRESS [ENTER YES]

DEDICATED SEGMENT TIMER

CODE 100

FIRST SEGMENT •

LAST SEGMENT •

AUTO STOP

CURRENT SEGMENT +1

RESET CURRENT SEGMENT

RESET TO FIRST SEG

INTERVAL TIME •

SEG. NO. • TIME •

COPY RANGE •

DISPLAY INTERVAL

LL-2475 REV 01

REV	DATE:		BY:
01	26 JULY 99	ADDED CODE 100 DEDICATED SEGMENT TIMER	EB

DAKTRONICS, INC.
BROOKINGS, SD 57006
DO NOT SCALE DRAWING

THE CONCEPTS EXPRESSED AND DETAILS SHOWN ON THIS DRAWING ARE CONFIDENTIAL AND PROPRIETARY. DO NOT REPRODUCE BY ANY MEANS WITHOUT THE EXPRESSED WRITTEN CONSENT OF DAKTRONICS, INC. COPYRIGHT 2010 DAKTRONICS, INC.

PROJ: ALL SPORT 5000
TITLE: INSERT; LL-2475 A/S 5000, SEGMENT TIMER
DESIGN: EB
DRAWN: E BRAVEK
DATE: 21 MAR 00
SCALE: 1=1

SHEET	REV	JOB NO:	FUNC-TYPE-SIZE
	01	P1196	E-07-A

129357

This page intentionally left blank.

C Sport Code Numbers

Model	Address	Basketball	Volleyball	Wrestling	Hockey	Football
BB-314	17	1105	2105	3105	4105	6105
BB-3101	17	1105	2105	3105	4105	6105
BB-3102	17	1105	2105	3105	4105	6105
BB-3103	17	1101, 1102 [1]	2101, 2111 [2]	3101, 3102 [3]		
BB-3104	17	1101, 1102 [1]	2101, 2111 [2]	3101, 3102 [3]		
BB-3105	17	1105	2105	3105	4105	6105
BB-3106	17	1105	2105	3105	4105	6105
BB-3107	17	1101, 1102 [1]	2101, 2111 [2]	3101, 3102 [3]		
BB-3108	17	1101, 1102 [1]	2101, 2111 [2]	3101, 3102 [3]		
BB-3114	1 + Col 5-8	All				All
BB-3115	1	All	All [4]	All [4]	All [4]	All
BB-3121	17	1105	2105	3105	4105	6105
BB-3123	17,14	1105	2105	3105	4105	6105
BB-3124	17,14	1105	2105	3105	4105	6105
BB-3125	17	1101, 1102 [1]	2101, 2111 [2]	3101, 3102 [3]		
BB-3126	17	1101, 1102 [1]	2101, 2111 [2]	3101, 3102 [3]		
BB-3142	17	1101	2101	3101	4105	6105
BB-3145	17	1101	2101	3101	4105	6105
BB-3146	17	1101	2101	3101	4105	6105
BB-3147	17	1101	2101	3101	4105	6105
SD-3101	23,24,25,26	1101, 1102	2101	3101	4401	
SD-3102	23,24,25,26	1101, 1102	2101	3101	4401	
SD-3103	23, 24, 25, 26, 27, 28	1101, 1102	2101	3101	4401	
SD-3106	15		2105	3105	4105	
ST-3001	17	1101	2101	3101	4105	6105
TI-3031	1 + Col 1-4	All	All	All	All	
TI-3103	1	All	All	All	All	All

Notes:

1. Code 1101 is Player-Foul and code 1102 is Foul-Player
2. Code 2101 is Game Number & Match Number and code 2111 is Game Number only
3. Code 3101 is Match Number and code 3102 is Advantage Time
4. Game Clock only

This page intentionally left blank.

D Quick Reference

All Sport 5500 Standard Keys

Refer to **Standard Keys (p. 6)** for detailed operating instructions.

Start/Stop Clock

- **<START>** and **<STOP>** control the function of the main clock.
- The green LED on the **<START>** button is illuminated when the clock is running.

Horn

- **<HORN>** sounds the main horn. The horn sounds for as long as the key is pressed.
- **<AUTO HORN>** sets the horn to automatically sound when a period end is reached. The yellow **<HORN>** LED is illuminated when the auto horn setting is ON.

Clock Direction

- **<COUNT UP/DOWN>** sets the direction of the main clock. The clock direction is shown in the upper right corner of the LCD.
- This key is disabled while the clock is running.

Set Main Clock

- The first press of the **<SET MAIN CLOCK>** edits the current main clock value.
- Press the **<SET MAIN CLOCK>** repeatedly to edit the configured period, break, and overtime length.
- Press **<ENTER>** at any of the displayed clock values to load that value into the main clock.
- This key is disabled while the clock is running.

Edit Key

- **<EDIT>** is used to edit score or statistic values. Press **<EDIT>** followed by the desired button to be edited. Refer to the specific sport section for all edit key functions.

Segment Timer

Refer to **Section 3: Segment Timer Operation (p. 20)** for detailed operating instructions.

First and Last Segment

- **<FIRST SEGMENT •>** and **<LAST SEGMENT •>** set the range of segments to be used.

Auto Stop

- **<AUTO STOP>** sets the console to stop at the end of each segment or at the end of the last segment.

Current Segment

- **<CURRENT SEGMENT +1>** increments the current segment value

Reset

- **<RESET CURRENT SEGMENT>** sets the segment time to the current segment value and stops the clock.
- **<RESET TO FIRST SEG>** sets the segment number and time to the first segment value.
- This key is disabled while the clock is running.

Interval

- **<INTERVAL TIME •>** sets the interval time.
- **<DISPLAY INTERVAL>** sets the console to display interval time between segments.

Segment Time Editing

- **<SEG. NO. • TIME •>** allows the time for a specified segment to be edited. Once the segment time is edited, pressing the up or down arrow key scrolls through the segment times and allows any other segments to be edited.
- **<COPY RANGE •>** copies a time value to a range of segments.

Edit Key Function

- Press **<EDIT>** followed by **<CURRENT SEGMENT +1>** to edit the current segment value.

Basketball

Refer to **Section 4: Basketball Operation (p. 25)** for detailed operating instructions.

Start-Up

- Turn the Power Switch **ON**.
- At the **Resume Game? Y/N** prompt, press **<ENTER /YES>** to resume the game where last shut off, or press **<Clear/NO>** to enter a new sport code number.

Team Score

- **<SCORE +1>**, **<SCORE +2>**, **<SCORE +3>**, and **<SCORE -1>** increment and decrement the team score.
- The console may ask for a player number depending on the **Team Score – Update Player** setting in the **EDIT SETTINGS** menu.

Team Fouls

- **<TEAM FOULS +1>** and **<TEAM FOULS -1>** increment and decrement the total fouls.
- **<BLANK PLAYER FOUL>** blanks the displayed player-foul digits.
- The console may ask for a player number depending on the **Team Score – Update Player** setting in the **EDIT SETTINGS** menu.

Time Out

- **<TIME OUT>** displays the number of full (1st press) or partial (2nd press) timeouts (if applicable). Press **<ENTER>** to take a time out for the selected team.
- **<TIME OUT ON/OFF>** selects a full (1st press) or partial (2nd press) time out and starts the time out clock.
- The time out clock may be displayed on the scoreboard depending on the **Time Outs – Show on Main** setting in the **EDIT SETTINGS** menu.

Possession

- **<POSS>** turns the possession indicators on or off for the respective team.

Bonus

- **<BONUS>** turns the 1-on-1 bonus indicators or 2-shot bonus indicators on or off.

Period

- **<PERIOD +1>** increments the period value.

Shot Clock Time

- **<SET SHOT TIME>** changes the current value of the shot clock timer. Pressing **<SET SHOT TIME>** a second time allows edit of the reset value of the shot clock timer.

Player Roster Keys

- **<PLAYER>** selects the player number for statistics edit. Pressing **<IN GAME>** or **<OUT OF GAME>** within the player statistics edit screen changes the status of the player selected. Press the arrow keys to edit the foul or points values for the chosen player. Press the up or down arrow keys to move to a different player.
- **<DELETE PLAYER>** deletes the selected player from the roster.

Player Substitution

- **<INDIV. SUB>** substitutes a player currently out of the game for an in-game player.
- **<MASS SUB>** substitutes five players who are currently out of the game for all of the in-game players.

Edit Key Function

- Press **<EDIT>** followed by any of the following keys to edit their respective values: **<TIME OUT>**, **<TIME OUT ON/OFF>**, **<SCORE +1>**, **<SCORE +2>**, **<SCORE +3>**, **<SCORE -1>**, **<TEAM FOULS +1>**, and **<PERIOD +1>**

Volleyball

Refer to **Section 5: Volleyball Operation (p. 40)** for detailed operating instructions.

Start-Up

- Turn the Power Switch **ON**.
- At the **Resume Game? Y/N** prompt, press **<ENTER /YES>** to resume the game where last shut off, or press **<Clear/NO>** to enter a new sport code number.

Team Score

- **<SCORE +1>** and **<SCORE -1>** increment and decrement the team score.

Sets Won

- **<SETS WON +1>** increments the number of games won for the respective team.

Serve

- **<SERVE>** turns the serve indicators on or off for the respective team.

Set and Match Number

- **<SETS +1>** increments the game number. Game scores will be reset to zero for the start of the next game. Press **<EDIT><SETS +1>** to recover previous game scores.
- **<MATCH NUMBER +1>** increments the match number.

Aces, Blocks, Kills, Digs

- **<ACES +1>**, **<BLOCKS +1>**, **<KILLS +1>**, and **<DIGS +1>** increment their respective team totals.
- The console may ask for a player number depending on the **Team Stats – Update Player** setting in the **EDIT SETTINGS** menu.
- Team statistics will be displayed based on the setting of **User Defined** settings for scoreboards displaying two of the stats.

Time Out

- **<TIME OUT>** displays the number of full (1st press) or partial (2nd press) timeouts (if applicable). Press **<ENTER>** to take a time out for the selected team.
- **<TIME OUT ON/OFF>** selects a full (1st press) or partial (2nd press) time out and starts the time out clock.
- The time out clock may be displayed on the scoreboard depending on the **Time Outs – Show on Main** setting in the **EDIT SETTINGS** menu.

Player Roster Keys

- **<PLAYER>** selects the player number for statistics edit. Pressing **<IN GAME>** or **<OUT OF GAME>** within the player statistics edit screen changes the status of the player selected. Press the left and right arrow keys to edit the aces, kills, blocks, and digs for the selected player. Press up or down arrow keys to move to a different player.
- **<DELETE PLAYER>** deletes the selected player from the roster.

Player Substitution

- **<INDIV. SUB>** substitutes a player currently out of the game for an in-game player.
- **<MASS SUB>** substitutes six players who are currently out of the game for all of the in-game players.
- **<SUBS +1>** increments the number of substitutions taken.

Edit Key Function

- Press **<EDIT>** followed by any of the following keys to edit their respective values: **<SCORE +1>**, **<SCORE -1>**, **<ACES +1>**, **<BLOCKS +1>**, **<KILLS +1>**, **<DIGS +1>**, **<TIME OUT>**, **<TIME OUT ON/OFF>**, **<SETS WON +1>**, **<MATCH NUMBER +1>**, **<SETS +1>**, and **<SUBS +1>**
- Pressing the up or down arrow keys after pressing **<EDIT><SCORE+1>** scrolls through the game scores for the selected team.

Wrestling

Refer to **Section 6: Wrestling Operation (p. 53)** for detailed operating instructions.

Start-Up

- Turn the Power Switch **ON**.
- At the **Resume Game? Y/N** prompt, press **<ENTER /YES>** to resume the game where last shut off, or press **<Clear/NO>** to enter a new sport code number.

Team Score

- **<SCORE +1>** and **<SCORE -1>** increment and decrement the team score.
- **<MATCH SCORE +1>**, **<MATCH SCORE +2>**, **<MATCH SCORE +3>**, and **<MATCH SCORE -1>** increment and decrement the match score.

Match Number

- **<MATCH NUMBER +1>** increments the match number.
- **<RESET MATCH>** resets the match score and sets match time to the configured Period length.

Period

- **<PERIOD +1>** increments the period number.

Injury and Blood Time

- **<START INJURY TIME>**, **<STOP INJURY TIME>**, **<START BLOOD TIME>**, and **<STOP BLOOD TIME>** control the injury and blood time out timers.
- The Blood and Injury time can be displayed on the scoreboard using the **Blood/ Injury Show on Main** setting in the **EDIT SETTINGS** menu

Advantage Time

- **<HOME (GREEN) ADVANTAGE>**, **<GUEST (RED) ADVANTAGE>**, and **<STOP ADVANTAGE CLOCK>** are used to control the advantage timer. Press the team advantage key to set the clock to decrease the opposing team advantage time or increase the selected team advantage time. Press the **<STOP ADVANTAGE CLOCK>** to stop the advantage timer.

Edit Key Function

- Press **<EDIT>** followed by any of the following keys to edit their respective values: **<TEAM SCORE +1>**, **<TEAM SCORE -1>**, **<MATCH SCORE +1>**, **<MATCH SCORE -1>**, **<MATCH NUMBER>**, **<PERIOD +1>**, **<TIME OUT>**, and **<TIME OUT ON/OFF>**
- Pressing **<EDIT>** and **<START INJURY TIME>**, **<STOP INJURY TIME>**, **<START BLOOD TIME>**, or **<STOP BLOOD TIME>** while the time out clock is stopped will edit the current value of the respective timer.

This page intentionally left blank.

E Supplementary Documents

Supplementary Documents

Scoreboard Driver Bootload Update Procedure.....**ED-18728**

This page intentionally left blank.

Scoreboard Driver Bootload Update Procedure

Some scoreboard drivers feature a "bootloader" that allows firmware updates to be performed in the field using a computer and an All Sport 5000 or an All Sport 5500 (ColorSmart) control console. The console acts as a signal converter between the computer and the scoreboard network.

Requirements

Software Versions

- The All Sport 5000 must have software version 4.1.5 or later.
- The All Sport 5500 must have software version 1.0.5 or later.
- The 16 column MultiCast driver (0P-1388-0100) must have software version 1.3 or later.
- The Gyrus driver (0A-1782-0100) must have software version 1.3 or later. Also note:
  - Gyrus driver address must be non-zero.
  - Gyrus driver will not bootload if running Power-On Diagnostics (FF).
  - Gyrus drivers must be running from Multi-Drop protocol and will not bootload while running in any of the other following protocols:
    – Multi-Line
    – Colorado Timing Systems
    – Omega

Equipment

- Computer with internet access and a 9-pin serial port [or USB-to-Serial adaptor (part # A-2221)]
- 9-pin to 9-pin serial cable (part # W-1267) or 9-pin to 25-pin serial cable (part # W-1249)

Instructions

1. Make sure that the All Sport console has a version of firmware that supports bootloading (see **Requirements** above). If it does not, contact customer service to request an All Sport PROM update.
2. Make sure the scoreboard driver has a version of firmware that supports bootloading by cycling the scoreboard power and observing the power up sequence. An "rx.x" message will be displayed, where "x.x" is the version number. If the version number is under 1.3, the drivers will have to be updated with a programming board or exchanged for newer versions.
3. Download the DakLoader program and the Field Update file:
   a. On a computer with internet access, open a web browser and go to: http://dakfiles.daktronics.com/downloads/Sports_Products/Bootloader/
   b. Click on the "DakLoader2.exe" file, and **Save** it to the Desktop.
   c. Click on the specific "Driver Update Files" directory, either "MultiCast" or "Gyrus".
   d. Click on the "16 col driver" directory.
   e. Click on the compressed ".zip" file, and **Save** it to the Desktop as well.
      – **MultiCast Drivers:** "ED-16327_Mcast16.zip"
      – **Gyrus Drivers:** "DD-2929930_Gyrus_vX_Y.zip" (X_Y = latest version number)
   f. Unzip the downloaded file to obtain the ".fud" (**F**ield **U**p**D**ate) file.

NOTE FOR GYRUS DRIVERS:
The proper Field Update File to unzip depends on the firmware of the All Sport 5000 console. Power on the console, and identify the firmware version during boot-up.

- Version 4.1.5: Unzip the FUD file in the "AllSport_v4_1_5_compatible" folder.
- Version 4.1.6+: Unzip the FUD file in the "AllSport_v4_1_6_plus_compatible" folder.

201 Daktronics Drive Brookings, SD 57006
www.daktronics.com/support
800.325.8766

DAKTRONICS

4. Enter code "0001" into the All Sport console. Remove any sport insert over the console's keypad, and press **<T>** or **<G>** to send rotating rows or rotating columns test command to the scoreboard.

5. Connect the computer to the All Sport 5000 or 5500:

   - If the All Sport console has the **J5 COMPUTER PORT** option loaded, connect this port to the computer using a standard 9-pin serial cable.
   - If the All Sport console has the **J6 I/O PORT** option loaded, connect this port to the computer using a 9-pin to 25-pin serial cable.

   > **Note:** If the computer does not have a 9-pin serial port, a USB-to-serial adaptor will be required.

6. Open the DakLoader2 program that was saved to the Desktop in **step 3b**.

7. Click on the **Communications** menu, and verify the appropriate **COM#** port is selected:

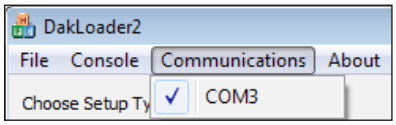

8. Select **Other AS5500**, and then click the **[…]** button to browse to the Field Update file that was extracted from the zip file in **step 3f**:

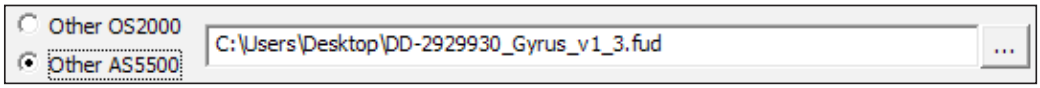

9. Click **Update**. The *Status* window will now show:
"Waiting for the update process to start on the AllSport."

10. Start the update process on the All Sport console:

    a. On the All Sport console, press **<MENU>** and then press **<ENTER>** to select a New Code. Enter a valid sport code other than 0001.

    b. Press **<MENU>** again. Use the arrow keys to navigate to "MENU- MAIN ENTER DISPLAY MENU?" and then press **<ENTER>**.

    c. Use the arrow keys to navigate to "MENU-DISPLAY RUN DOWNLOAD Y/N?" and then press **<ENTER>**.

    d. The All Sport LCD should immediately show "HEADER RECEIVED WAIT FOR ERASE", and the *Status* window in the DakLoader program should show "Sending field update…

    > **Note:** If the process does not start, check the serial cable connection and the COM port selection in the DakLoader program. The All Sport will time out after 20 seconds and allow the process to be tried again.

    e. There will be a delay of a few seconds while the All Sport sends a command to the scoreboard network instructing all drivers to erase their firmware. Both the All Sport and the DakLoader program will then show the progress of the update:

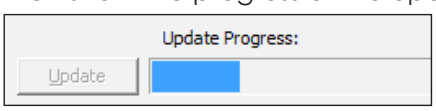

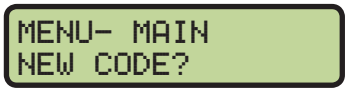

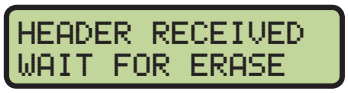

11. Monitor the status of the update on the scoreboard:

a. Supported drivers will display the status codes in the table below on their first 2 columns (typically the first 2 clock digits or Home/Guest score digits if there is no clock):

Status Code	Meaning
bA	Bootload mode entered, looking for an active communication channel
bb	Communication channel found, waiting for Download Firmware command
bC	Download Firmware command received, erasing memory
bd	Memory erased, receiving new firmware file
bE	Bootload successful, waiting for command to exit bootloader
b1	Command fail: version specified in header is older than current version
b2	Command fail: ED number specified in header doesn't match current ED
b3	Command fail: bad command checksum
b4	Command fail: timeout (*Unused*)
b5	Flash erase failed
b6	Bad hex record checksum
b7	Unrecognized hex record type
b8	Hex file receive timeout
b9	Hex programming error (*Gyrus Driver Only*)

b. When the entire update file has been transmitted, the All Sport will show "FILE TRANSFERRED RETRY Y/N?" and the DakLoader2 program *Status* window will show "Field update compete. Waiting for retry or stop..."

- If there are any supported drivers on the network that do not show the "bE" status code, press **<ENTER>** on the All Sport console to retry the update. Only those drivers that failed the first attempt will now receive the update.
- If all drivers updated successfully, press **<CLEAR>** on the All Sport console to return to normal operation. The console will indicate to the network that the update process is complete and all drivers will exit the bootload mode.

DO NOT UNPLUG OR POWER OFF THE ALL SPORT UNTIL IT HAS RETURNED TO NORMAL OPERATION!

201 Daktronics Drive Brookings, SD 57006
www.daktronics.com/support
800.325.8766

DAKTRONICS

This page intentionally left blank.

F Daktronics Warranty and Limitation of Liability

This section includes the Daktronics Warranty & Limitation of Liability statement (SL-02374).

This page intentionally left blank.

DAKTRONICS WARRANTY & LIMITATION OF LIABILITY

This Warranty and Limitation of Liability (the "Warranty") sets forth the warranty provided by Daktronics with respect to the Equipment. By accepting delivery of the Equipment, Purchaser and End User agree to be bound by and accept these terms and conditions. Unless otherwise defined herein, all terms within the Warranty shall have the same meaning and definition as provided elsewhere in the Agreement.

DAKTRONICS WILL ONLY BE OBLIGATED TO HONOR THE WARRANTY SET FORTH IN THESE TERMS AND CONDITIONS UPON RECEIPT OF FULL PAYMENT FOR THE EQUIPMENT.

1. **Warranty Coverage**

A. Daktronics warrants to the original end user (the "End User") that the Equipment will be free from Defects (as defined below) in materials and workmanship for a period of one (1) year (the "Warranty Period"). The Warranty Period shall commence on the earlier of: (i) four weeks from the date that the Equipment leaves Daktronics' facility; or (ii) Substantial Completion as defined herein. The Warranty Period shall expire on the first anniversary of the commencement date.

"Substantial Completion" means the operational availability of the Equipment to the End User in accordance with the Equipment's specifications, without regard to punch-list items, or other non-substantial items which do not affect the operation of the Equipment.

B. Daktronics' obligation under this Warranty is limited to, at Daktronics' option, replacing or repairing, any Equipment or part thereof that is found by Daktronics not to conform to the Equipment's specifications. Unless otherwise directed by Daktronics, any defective part or component shall be returned to Daktronics for repair or replacement. This Warranty does not include on-site labor charges to remove or install these components. Daktronics may, at its option, provide on-site warranty service. Daktronics shall have a reasonable period of time to make such replacements or repairs and all labor associated therewith shall be performed during regular working hours. Regular working hours are Monday through Friday between 8:00 a.m. and 5:00 p.m. at the location where labor is performed, excluding any holidays observed by Daktronics.

C. Daktronics shall pay ground transportation charges for the return of any defective component of the Equipment. All such items shall be shipped by End User DDP Daktronics designated facility. If returned Equipment is repaired or replaced under the terms of this Warranty, Daktronics will prepay ground transportation charges back to End USer and shall ship such items DDP End User's designated facility; otherwise, End User shall pay transportation charges to return the Equipment back to the End User and such Equipment shall be shipped Ex Works Daktronics designated facility. All returns must be pre-approved by Daktronics before shipment. Daktronics shall not be obligated to pay freight for any unapproved return. End User shall pay any upgraded or expedited transportation charges.

D. Any replacement parts or Equipment will be new or serviceably used, comparable in function and performance to the original part or Equipment, and warranted for the remainder of the Warranty Period. Purchasing additional parts or Equipment from the Seller does not extend the Warranty Period.

E. Defects shall be defined as follows. With regard to the Equipment (excepting LEDs), a "Defect" shall refer to a material variance from the design specifications that prohibit the Equipment from operating for its intended use. With respect to LEDs, "Defects" are defined as LED pixels that cease to emit light. Unless otherwise expressly provided, this Warranty does not impose any duty or liability upon Daktronics for partial LED pixel degradation. Notwithstanding the foregoing, in no event does this Warranty include LED pixel degradation caused by UV light. This Warranty does not provide for the replacement or installation of communication methods including but not limited to, wire, fiber optic cable, conduit, trenching, or for the purpose of overcoming local site interference radio equipment substitutions.

EXCEPT AS OTHERWISE EXPRESSLY SET FORTH IN THIS WARRANTY, TO THE MAXIMUM EXTENT PERMITTED BY APPLICABLE LAW, DAKTRONICS DISCLAIMS ANY AND ALL OTHER PROMISES, REPRESENTATIONS AND WARRANTIES APPLICABLE TO THE EQUIPMENT AND REPLACES ALL OTHER WARRANTIES OR CONDITIONS, EXPRESS OR IMPLIED, INCLUDING, BUT NOT LIMITED TO, ANY IMPLIED WARRANTIES OR CONDITIONS OF MERCHANTABILITY, FITNESS FOR A PARTICULAR PURPOSE, OR ACCURACY OR QUALITY OF DATA. OTHER ORAL OR WRITTEN INFORMATION OR ADVICE GIVEN BY DAKTRONICS, ITS AGENTS OR EMPLOYEES, SHALL NOT CREATE A WARRANTY OR IN ANY WAY INCREASE THE SCOPE OF THIS LIMITED WARRANTY.

THIS LIMITED WARRANTY IS NOT TRANSFERABLE.

2. Exclusion from Warranty Coverage

This Warranty does not impose any duty or liability upon Daktronics for any:

A. damage occurring at any time, during shipment of Equipment unless otherwise provided for in the Agreement. When returning Equipment to Daktronics for repair or replacement, End User assumes all risk of loss or damage, agrees to use any shipping containers that might be provided by Daktronics, and to ship the Equipment in the manner prescribed by Daktronics;

B. damage caused by: (i)the improper handling, installation, adjustment, use, repair, or service of the Equipment,or (ii) any physical damage which includes, but is not limited to, missing, broken, or cracked components resulting from non-electrical causes; altered, scratched, or fractured electronic traces; missing or gauged solder pads; cuts or clipped wires; crushed, cracked, punctured, or bent circuit boards; or tampering with any electronic connections, provided that such damage is not caused by personnel of Daktronics or its authorized repair agents;

C. damage caused by the failure to provide a continuously suitable environment, including, but not limited to: (i) neglect or misuse; (ii) improper power including, without limitation, a failure or sudden surge of electrical power; (iii) improper air conditioning, humidity control, or other environmental conditions outside of the Equipment's technical specifications such as extreme temperatures, corrosives and metallic pollutants; or (iv) any other cause other than ordinary use;

DAKTRONICS

D. damage caused by fire, flood, earthquake, water, wind, lightning or other natural disaster, strike, inability to obtain materials or utilities, war, terrorism, civil disturbance, or any other cause beyond Daktronics' reasonable control;

E. failure to adjust, repair or replace any item of Equipment if it would be impractical for Daktronics personnel to do so because of connection of the Equipment by mechanical or electrical means to another device not supplied by Daktronics, or the existence of general environmental conditions at the site that pose a danger to Daktronics personnel;

F. statements made about the product by any salesperson, dealer, distributor or agent, unless such statements are in a written document signed by an officer of Daktronics. Such statements as are not included in a signed writing do not constitute warranties, shall not be relied upon by End User and are not part of the contract of sale;

G. damage arising from the use of Daktronics products in any application other than the commercial and industrial applications for which they are intended, unless, upon request, such use is specifically approved in writing by Daktronics;

H. replenishment of spare parts. In the event the Equipment was purchased with a spare parts package, the parties acknowledge and agree that the spare parts package is designed to exhaust over the life of the Equipment, and as such, the replenishment of the spare parts package is not included in the scope of this Warranty;

I. security or functionality of the End User's network or systems, or anti-virus software updates;

J. performance of preventive maintenance;

K. third-party systems and other ancillary equipment, including without limitation front-end video control systems, audio systems, video processors and players, HVAC equipment, batteries and LCD screens;

L. incorporation of accessories, attachments, software or other devices not furnished by Daktronics; or

M. paint or refinishing the Equipment or furnishing material for this purpose.

3. Limitation of Liability

Daktronics shall be under no obligation to furnish continued service under this Warranty if alterations are made to the Equipment without the prior written approval of Daktronics.

It is specifically agreed that the price of the Equipment is based upon the following limitation of liability. In no event shall Daktronics (including its subsidiaries, affiliates, officers, directors, employees, or agents) be liable for any claims asserting or based on (a) loss of use of the facility or equipment; lost business, revenues, or profits; loss of goodwill; failure or increased cost of operations; loss, damage or corruption of data; loss resulting from system or service failure, malfunction, incompatibility, or breaches in system security; or (b) any special, consequential, incidental or exemplary damages arising out of or in any way connected with the Equipment or otherwise, including but not limited to damages for lost profits, cost of substitute or replacement equipment, down time, injury to property or any damages or sums paid to third parties, even if Daktronics has been advised of the possibility of such damages. The foregoing limitation of liability shall apply whether any claim is based upon principles of contract, tort or statutory duty, principles of indemnity or contribution, or otherwise.

In no event shall Daktronics be liable for loss, damage, or injury of any kind or nature arising out of or in connection with this Warranty in excess of the Purchase Price of the Equipment. The End User's remedy in any dispute under this Warranty shall be ultimately limited to the Purchase Price of the Equipment to the extent the Purchase Price has been paid.

4. Assignment of Rights

The Warranty contained herein extends only to the End User (which may be the Purchaser) of the Equipment and no attempt to extend the Warranty to any subsequent user-transferee of the Equipment shall be valid or enforceable without the express written consent of Daktronics.

5. Governing Law

The rights and obligations of the parties under this Warranty shall not be governed by the provisions of the United Nations Convention on Contracts for the International Sales of Goods of 1980. The parties consent to the application of the laws of the State of South Dakota to govern, interpret, and enforce each of the parties' rights, duties, and obligations arising from, or relating in any manner to, the subject matter of this Warranty, without regard to conflict of law principles.

6. Availability of Extended Service Agreement

For End User's protection, in addition to that afforded by the warranties set forth herein, End User may purchase extended warranty services to cover the Equipment. The Extended Service Agreement, available from Daktronics, provides for electronic parts repair and/or on-site labor for an extended period from the date of expiration of this warranty. Alternatively, an Extended Service Agreement may be purchased in conjunction with this Warranty for extended additional services. For further information, contact Daktronics Customer Service at 1-800-DAKTRONics (1-800-325-8766).

Copyright © Daktronics, Inc. SL-02374 Rev 12 19Nov15

DAKTRONICS