TEREX®
Roadbuilding

# Model CR452
# Hot Mix Asphalt Paver

Serial Number: 060580

TEREX®
*Roadbuilding*

# Table of Contents


| BOM | Description | Page |
|---|---|---|
| Serial Number 060580 | | |
| PaverMenuSheet | Operation Manual Menu Sheet | 1 |
| 05210XAM | Automation - Mounting Brackets | 3 |
| 05046XEL | Automation - Slope Sensor Mounting | 5 |
| 05234RBF | Basket Plumbing - Basic Hydraulic Components | 7 |
| 05210WJN | Electrical - Console Additions, Steer Assist | 15 |
| 05234JAK | Electrical - Console and Junction Box | 17 |
| 05032GSK | Engine & Pumps - Air Cleaner | 23 |
| 05032GWL | Engine & Pumps - Batteries | 25 |
| 05234PGE | Engine & Pumps - Fuel System | 27 |
| 05234QAG | Engine & Pumps - Hydraulic Reservior Package | 35 |
| 05234GBC | Engine & Pumps - Power Mounting | 43 |
| 05032DVC | Engine & Pumps - Pump Drives | 51 |
| 05032GJA | Engine & Pumps - Sound Insulation | 61 |
| 05032DTY | Feed System - Conveyor & Auger Drive | 63 |
| 05032EDK | Feed System - Conveyor Skirts & Chain | 67 |
| 05037FLL | Feed System - Screw Conveyor Mounting | 71 |
| 05234EAB | Feed System - Slat Conveyor Components | 73 |
| 05210FEQ | Feed System - Sonic Controls Mounting | 77 |
| 05210FER | Feed System - Sonic Feed Controls | 79 |
| 05234SAA | Fume System - Fan & Hydraulic Plumbing | 81 |
| 05032MAV | Fume System - Hoods & Ducting | 85 |
| 05234LAE | Main Frame - Accessories | 87 |
| 05037MZS | Main Frame - Console Cover | 91 |
| 05032MTD | Main Frame - Console Hydraulic | 93 |
| 05032MNM | Main Frame - Console Mechanical | 95 |
| 05210KFB | Main Frame - Emblems | 99 |
| 05210BJE | Main Frame - Fenders | 101 |
| 05210ESF | Main Frame - Flow Gates | 103 |
| 05234AAB | Main Frame - Frame, Hood, Hopper & Liners Kit | 105 |
| 05234HAA | Main Frame - Hood w/Charge Air Cooler | 109 |
| 05234AGB | Main Frame - Hopper Wings | 113 |
| 05032KAW | Main Frame - Miscellaneous Parts | 115 |
| 05032KGC | Main Frame - Operator's Seat | 117 |
| 05046YUB | Main Frame - Umbrella | 119 |
| 05234YCD | Push Rollers - 1" Spacer Blocks | 121 |
| 05234YAB | Push Rollers - Ocillating Push Roller Assembly | 123 |
| 05237RTC | Screed - Generator Hydraulic Components | 125 |

# Table of Contents


| BOM | Description | Page |
|---|---|---|
| Serial Number 060580 | | |
| 05032XSM | Screed - Pull Arms | 127 |
| 05210QLB | Suspension - Frame Raise Components | 129 |
| 05032BAT | Suspension - Front Suspension & Steering | 133 |
| 05032BBF | Suspension - Front Wheel Assembly | 137 |
| 05234BDD | Suspension - Rear Suspension, Drive & Plumbing | 139 |
| 05032BAR | Suspension - Steering Feedback Sensor | 143 |
| 05210QWQ | Suspension - Steering Hydraulic Circuit | 145 |

**Standard Paving Equipment Operation & Maintenance Instructions.**
**The following publications compose the Operation & Maintenance Manuals for this Equipment.**

## MANUALS - TRACTORS

| | PART NO. | FORM | DESCRIPTION |
|---|---|---|---|
| ☐ | 499992523101 | 21286 | CR300 O&M |
| ☐ | 499992523102 | 21284 | CR400 Slat O&M |
| ☐ | 499992523103 | 21521 | CR400 Remix O&M |
| ☐ | 499992523104 | 20850 | CR500 Slat O&M |
| ☐ | 499992523105 | 21522 | CR500 Remix O&M |
| ☐ | 499992523106 | 23028 | 300 Series - Tier II/Tier III |
| ☒ | 499992523107 | 23029 | 400 Series - Tier II/Tier III |
| ☐ | 499992523108 | 23030 | 500 Series - Tier II/Tier III |
| ☐ | 499992523109 | 23915 | 662RM RoadMix O&M |
| ☐ | _____ | _____ | _____ |

## MANUALS - SCREEDS

| | PART NO. | FORM | DESCRIPTION |
|---|---|---|---|
| ☐ | 499992523201 | 19373 | Fastach 8 Screed O&M |
| ☐ | 499992523202 | 18537 | Fastach 10 Screed O&M |
| ☐ | 499992523203 | 22415 | Fastach II O&M |
| ☐ | 499992523204 | 22416 | ST16-18 O&M |
| ☐ | 499992523205 | 18565 | Stretch 20 Screed O&M |
| ☐ | 499992523207 | 23596 | VersaScreed O&M |
| ☐ | _____ | _____ | _____ |

## MANUALS - CONTROLS

| | PART NO. | FORM | DESCRIPTION |
|---|---|---|---|
| ☒ | 49999176 | 20576 | Gen III Sonics O&M |
| ☐ | 499992526001 | 18121 | Sundstrand Auto Grade & Slope O&M |
| ☐ | 499992526003 | 22806 | AGL EZ-PAV O&M |
| ☐ | 49999188 | 21048 | Topcon System 4 O&M |
| ☐ | 499992526002 | 22506 | Topcon SAS O&M |
| ☐ | 499992526004 | 23021 | Topcon System 5 & Smoothtrac O&M |
| ☐ | 499992526007 | 23561 | Moba-Matic Operation |
| | (Includes 23562, Moba Big-Ski - Do not order separately) | | |
| ☐ | 499992526008 | 23562 | Moba Big-Ski Installation |
| ☐ | 499992526011 | 24580 | Moba Mechanical Grade & Slope Control System |
| ☐ | _____ | _____ | _____ |
| ☐ | _____ | _____ | _____ |

## PAVER SAFETY MANUAL

**Note:** A safety manual is supplied with each machine shipment within Manuals Package 04418-795-01. All Manuals supplied following original machine shipment must include a safety manual.

| | | | |
|---|---|---|---|
| ☒ | 499992526005 | AP-120-02 | AEM Paver Safety Manual |

## SCHEMATICS - TRACTOR HYDRAULIC

| | PART NO. | DESCRIPTION |
|---|---|---|
| ☒ | 4495-008 | 400/500 Series Slat Pavers |
| ☐ | 4495-012 | 300 Series Slat Pavers |
| ☐ | 4495-014 | 400/500 Series Remix Pavers |
| ☐ | 4495-019 | 662RM Road Mix Machine |
| ☐ | 4495-028 | 300L Series Pavers |
| ☐ | 4495-033 | 300L Series Pavers |
| ☐ | _____ | _____ |

## SCHEMATICS - TRACTOR ELECTRICAL

| | PART NO. | DESCRIPTION |
|---|---|---|
| ☐ | 4494-105-19 | 352 Slat Pavers - Tier II |
| ☐ | 4494-105-20 | 362 Slat Pavers - Tier II |
| ☐ | 4494-105-21 | 452/552 Slat Pavers - Tier II |
| ☐ | 4494-105-22 | 462/562 Slat Pavers - Tier II |
| ☐ | 4495-022 | 662RM Road Mix Machine |
| ☐ | 4495-023 | 452/552 Slat Pavers - Tier III |
| ☐ | 4495-024 | 462/562 Slat Pavers - Tier III |
| ☐ | 4495-025 | 452/552 Remix Pavers - Tier III |
| ☐ | 4495-026 | 462/562 Remix Pavers - Tier III |
| ☐ | 4495-030 | 352L Slat Paver - Tier III |
| ☐ | 4495-031 | 362L Slat Paver - Tier III |
| ☐ | 4495-032 | 662RM Road Mix Machine |
| ☐ | 4495-038 | 362L Slat Paver - Tier III |
| ☒ | 4495-040 | 452/552 Slat Pavers - Tier III |
| ☐ | 4495-041 | 462/562 Slat Pavers - Tier III |
| ☐ | _____ | _____ |

## SCHEMATICS - SCREEDS

| | PART NO. | DESCRIPTION |
|---|---|---|
| ☐ | 4495-004 | Hydraulic Schematic - All Stretch Screeds |
| ☐ | 4495-005 | Hydraulic Schematic - All Fixed Screeds |
| ☐ | 4495-007 | Electric Schematic & Generator Drive Hydraulic Schematic - Stretch Elec Screeds (**Note:** Requires Hyd Schematic 4495-004 also) |
| ☐ | 4495-011 | Electric & Hydraulic Schematic (20kW/1PH Generator) - Fastach II Screed |
| ☐ | 4495-013 | Electric & Hydraulic Schematic - VersaScreed |
| ☐ | 4495-029 | Electric & Hydraulic Schematic - Fastach Electric Screeds |
| ☐ | 4495-035 | Electric & Hydraulic Schematic - Fastach Electric Screeds |
| ☐ | _____ | _____ |
| ☐ | _____ | _____ |

TEREX
CEDARAPIDS

## Mounting Brackets - Topcon Moba Controls

Parts List No 05210XAM

| Ref. No. | Part Number | Description | Quantity |
|---|---|---|---|
| 1 | 09704-906-31 | Mount, Pull Arm Bracket | 2 |
| 2 | 07014-005 | Lockwasher, 1/2" | 8 |
| 3 | 07014-020 | Washer, 1/2" Flat | 8 |
| 4 | 07383-070 | Capscrew, 1/2" x 1-1/2" | 8 |

NOTE: There is no illustration associated with this parts listing.
Consult Product Support department for additional information.

Cedarapids
A Terex Company

## Slope Sensor Mounting Kit - Topcon System

Parts List No. 05046XEL

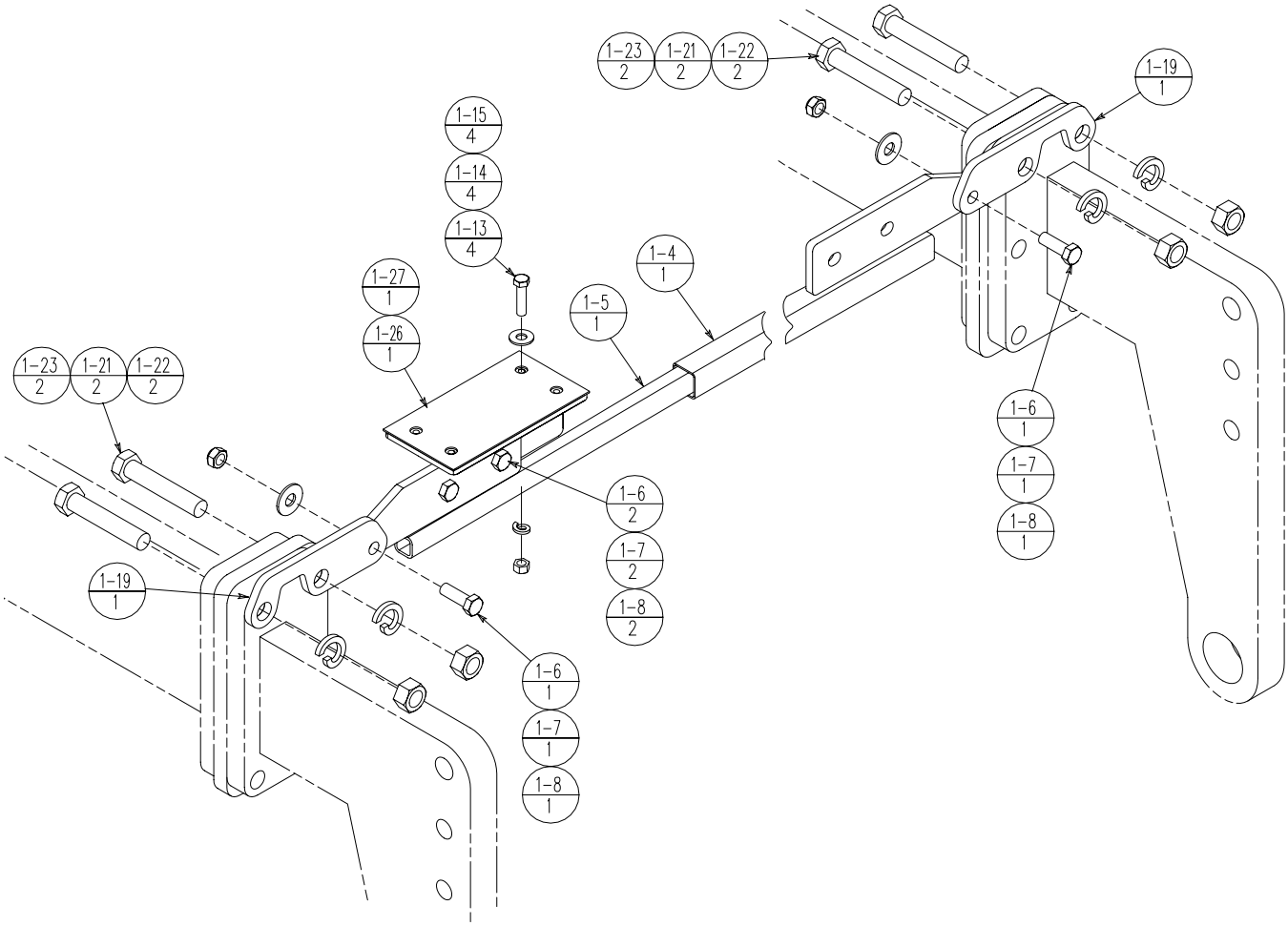


| Ref. No. | Part Number | Description | Quantity |
|---|---|---|---|
| 1-4 | 9704-905-76 | Beam, Slope | 1 |
| 1-5 | 9704-905-77 | Beam, Slope | 1 |
| 1-6 | 7383-070 | Capscrew, 1/2" x 1-1/2" | 4 |
| 1-7 | 7014-020 | Washer, 1/2" Flat | 4 |
| 1-8 | 45890-102-28 | Locknut, 1/2" | 4 |
| 1-13 | 7383-040 | Capscrew, 3/8" x 1-1/2" | 4 |
| 1-14 | 7014-003 | Lockwasher, 3/8" | 4 |
| 1-15 | 7012-025 | Hex Nut, 3/8" | 4 |
| 1-19 | 9704-905-84 | Flat, Mounting | 2 |
| 1-21 | 7014-009 | Lockwasher, 3/4" | 4 |
| 1-22 | 7383-126 | Capscrew, 3/4" x 4" | 4 |
| 1-23 | 7012-030 | Hex Nut, 3/4" | 4 |
| 1-26 | 9704-905-22 | Mount, Slope Sensor | 1 |
| 1-27 | 9704-906-73 | Rubber, Vibration Isolation | 1 |

Return to Table of Contents Page

TEREX
CEDARAPIDS

Table of Contents

## Basket Plumbing & Hydraulic Components - 05234RBF


| Ref No. | Description | Page No. |
|---|---|---|
| 1 | Basket Plumbing Illustration | 2 |
| 2 | Basket Plumbing Parts List | 3 |
| 3 | Basket Plumbing Sub-Assembly Illustration | 4 |
| 4 | Basket Plumbing Sub-Assembly Parts List | 5 |
| 5 | Valve Assembly - Screed Lift | 6 |
| 6 | Valve Assembly - L.H. Front Bulkhead | 7 |
| 7 | Valve Assembly - R.H. Front Bulkhead | 8 |

Return to Table of Contents Page

TEREX
CEDARAPIDS

## Basket Plumbing

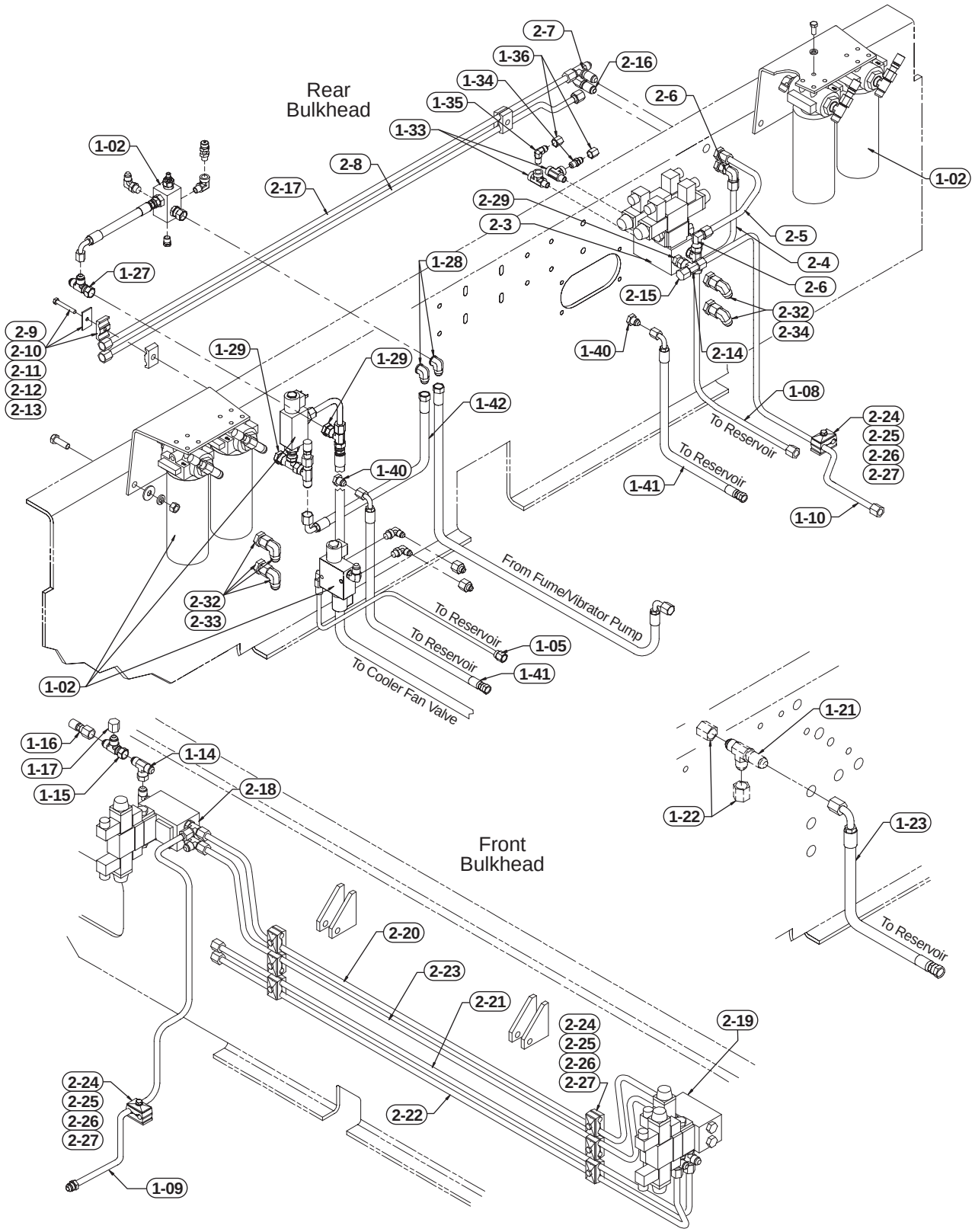

Return to Table of Contents Page

TEREX
CEDARAPIDS

## Basket Plumbing

Parts List No. 05234RBF

| Ref # | Part Number | Part Name | Description | Qty |
|---|---|---|---|---|
| 1-02 | 0970865014 | SUB-ASSEMBLY | BASKET PLBG *(See Form 24151-24152)* | 1 |
| 1-05 | 0970406427 | TUBE ASSY | BRAKE DRAIN | 1 |
| 1-08 | 0970466275 | TUBE ASSY | SCREED LIFT DRAIN | 1 |
| 1-09 | 0970466274 | TUBE ASSY | AUX-FRONT | 1 |
| 1-10 | 0970466001 | TUBE ASSY | AUX. CKT. REAR | 1 |
| 1-14 | 07430356 | TEE | 1/2"JIC SWIVEL NUT | 1 |
| 1-15 | 07430345 | TEE | 1/2"JIC SWIVEL NUT | 1 |
| 1-16 | 4508052716 | FITTING | TEST 1/2"JIC | 1 |
| 1-17 | 07430229 | CAP | 1/2" | 1 |
| 1-21 | 07430438 | TEE | #12 RUN BULKHD | 1 |
| 1-22 | 07430231 | CAP | 3/4" JIC | 2 |
| 1-23 | 0765302135 | HOSE ASSY | 3/4" ID X 21" | 1 |
| 1-27 | 07430345 | TEE | 1/2"JIC SWIVEL NUT | 1 |
| 1-28 | 07430392 | ELBOW | 1/2" BULKHD | 2 |
| 1-29 | 07430367 | UNION | 1/2"JIC BULKHD | 2 |
| 1-33 | 4572077538 | TEE | 1/4" PIPE STEEL RUN | 2 |
| 1-34 | 07430004 | CONNECTOR | 1/4"P X #6 JIC | 1 |
| 1-35 | 07430019 | ELBOW | 1/4"PIPE X #6 JIC | 1 |
| 1-36 | 07430228 | CAP | 3/8"JIC | 2 |
| 1-40 | 07430411 | ELBOW | 1/2" UNION | 2 |
| 1-41 | 0765201835 | HOSE ASSY | 1/2" ID X 18" | 2 |
| 1-42 | 0765202235 | HOSE ASSY | 1/2" ID X 22" | 1 |
| 2-3 | 0970466282 | VALVE ASSY | SCREED LIFT *(See Form 23368)* | 1 |
| 2-4 | 0970466177 | TUBE ASSY | | 1 |
| 2-5 | 0970465632 | TUBE ASSY | SCREED LOWER | 1 |
| 2-6 | 07430405 | ELBOW | 1/2" SWIVEL | 2 |
| 2-7 | 07430393 | TEE | 1/2" BULKHD | 1 |
| 2-8 | 0970465323 | TUBE ASSY | SCREED LIFT | 1 |
| 2-9 | 4508052923 | CLAMP HALF | FOR 1/2" TUBE | 4 |
| 2-10 | 4508052926 | PLATE | COVER FOR CLAMP | 2 |
| 2-11 | 07383027 | CAPSCREW | 5/16"NC X 2-1/4 | 2 |
| 2-12 | 07014002 | WASHER | 5/16" LOCK | 2 |
| 2-13 | 07012024 | HEX NUT | 5/16" NC | 2 |
| 2-14 | 07430356 | TEE | 1/2"JIC SWIVEL NUT | 1 |
| 2-15 | 07430229 | CAP | 1/2" | 1 |
| 2-16 | 07430392 | ELBOW | 1/2" BULKHD | 1 |
| 2-17 | 0970465743 | TUBE ASSY | SCREED LIFT | 1 |
| 2-18 | 0970466280 | VALVE ASSY | L.H. FRONT *(See Form 23369)* | 1 |
| 2-19 | 0970466379 | VALVE ASSY | R.H. FRONT *(See Form 24540)* | 1 |
| 2-20 | 0970465972 | TUBE ASSY | FR BASKET PRESS | 1 |
| 2-21 | 0970465633 | TUBE ASSY | UPPER HOPPER WI | 1 |
| 2-22 | 0970465634 | TUBE ASSY | LOWER HOPPER WI | 1 |
| 2-23 | 0970465973 | TUBE ASSY | FR BASKET RETUR | 1 |
| 2-24 | 4508052923 | CLAMP HALF | FOR 1/2" TUBE | 16 |
| 2-25 | 4508052926 | PLATE | COVER FOR CLAMP | 8 |
| 2-26 | 07383024 | CAPSCREW | 5/16"NC X 1-1/2 | 8 |
| 2-27 | 07007024 | WASHER | 5/16" SHKP LK | 8 |
| 2-29 | 07430255 | CONNECTOR | #8MSAE X #8MJIC | 1 |
| 2-32 | 07430430 | CONNECTOR | 3/4" BULKHD | 4 |
| 2-33 | 07430387 | ELBOW | 3/4" SWIVEL NUT | 2 |
| 2-34 | 07430427 | FITTING | 3/4"JIC SWIVEL | 2 |

Return to Table of Contents Page

TEREX
CEDARAPIDS

## Basket Plumbing Sub-Assembly

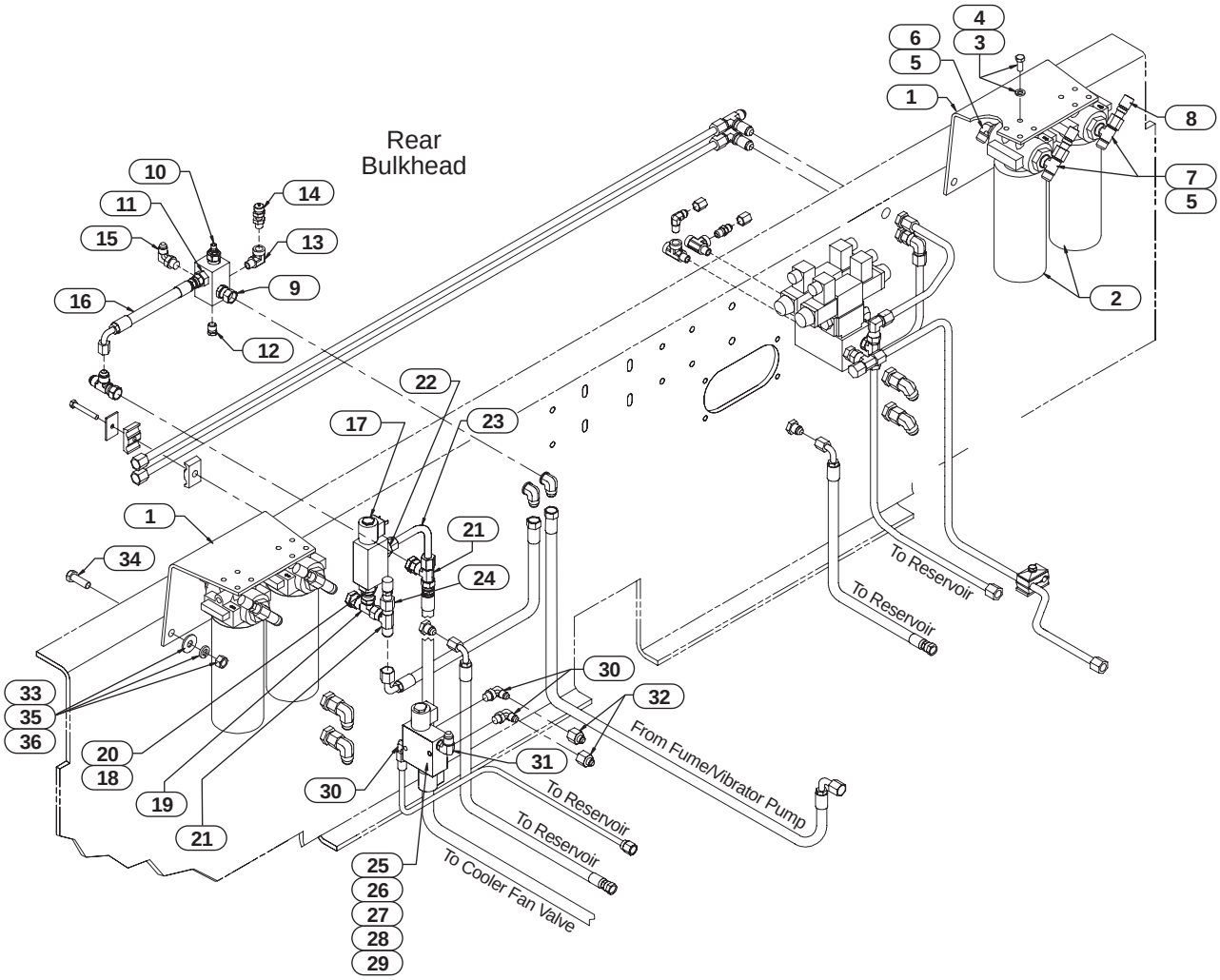

Return to Table of Contents Page

TEREX
CEDARAPIDS

## Basket Plumbing Sub-Assembly

Parts List No. 09708-650-14

| Ref # | Part Number | Part Name | Description | Qty |
|---|---|---|---|---|
| 1 | 0970466307 | BRACKET | CHARGE FILTER MTG | 2 |
| 2 | 4517500141 | FILTER | SPIN ON | 4 |
| - | 451750014101 | Element, Filter (for above filter) | | As Req |
| 3 | 07383038 | CAPSCREW | 3/8" NC X 1" | 16 |
| 4 | 07014003 | WASHER | 3/8" LOCK | 16 |
| 5 | 4572077528 | REDUCER | 1"SAE TO 1/2"SAE | 8 |
| 6 | 07430278 | ELBOW | #8SAE #8JIC | 4 |
| 7 | 07430303 | TEE | #8 BRANCH | 4 |
| 8 | 4508052716 | FITTING | TEST 1/2"JIC | 4 |
| 9 | 07430468 | CONNECTOR | ORING 1/2JIC | 1 |
| 10 | 4525200919 | VALVE | | 1 |
| 11 | 07430256 | CONNECTOR | #10SAE #8JIC | 1 |
| 12 | 4572077060 | PLUG | 1/4" PIPE | 1 |
| 13 | 4572077002 | ELBOW | 90DEG STR 1/4"XH | 1 |
| 14 | 4508052706 | FITTING | TEST 1/4"NPT | 1 |
| 15 | 07430279 | ELBOW | #10SAE #8JIC | 1 |
| 16 | 0765201335 | HOSE ASSY | | 1 |
| 17 | 4525201428 | VALVE | VENTABLE RELIEF | 1 |
| 18 | 07430401 | CONNECTOR | #8OR X1/2JIC FS | 1 |
| 19 | 07430345 | TEE | 1/2"JIC SWIVEL NUT | 1 |
| 20 | 4572077512 | REDUCER | #12MSAE X #8FSAE | 1 |
| 21 | 07430356 | TEE | 1/2"JIC SWIVEL NUT | 2 |
| 22 | 07430257 | CONNECTOR | 1-1/16"SAE 1/2" | 1 |
| 23 | 0970466378 | TUBE ASSY | VIBRATOR VALVE | 1 |
| 24 | 4508052716 | FITTING | TEST 1/2"JIC | 1 |
| 25 | 07014017 | WASHER | 5/16" | 4 |
| 26 | 0970465669 | VALVE | BRAKE/RANGE SHIFT | 1 |
| 27 | 07383029 | CAPSCREW | 5/16"NC X 2-3/4 | 2 |
| 28 | 07014002 | WASHER | 5/16" LOCK | 2 |
| 29 | 07012024 | HEX NUT | 5/16" NC | 2 |
| 30 | 07430275 | ELBOW | #6ORINGX3/8"JIC90DG | 3 |
| 31 | 07430277 | ELBOW | 9/16"SAE 1/2"JIC | 1 |
| 32 | 4525901203 | FITTING | ORIFICE 5/64" DIA | 2 |
| 33 | 07014020 | WASHER | 1/2" | 4 |
| 34 | 07383070 | CAPSCREW | 1/2"NC X 1-1/2 | 4 |
| 35 | 07014005 | WASHER | 1/2" LOCK | 4 |
| 36 | 07012027 | HEX NUT | 1/2" NC | 4 |

Return to Table of Contents Page

TEREX
CEDARAPIDS

## Valve Assembly - Screed Lift

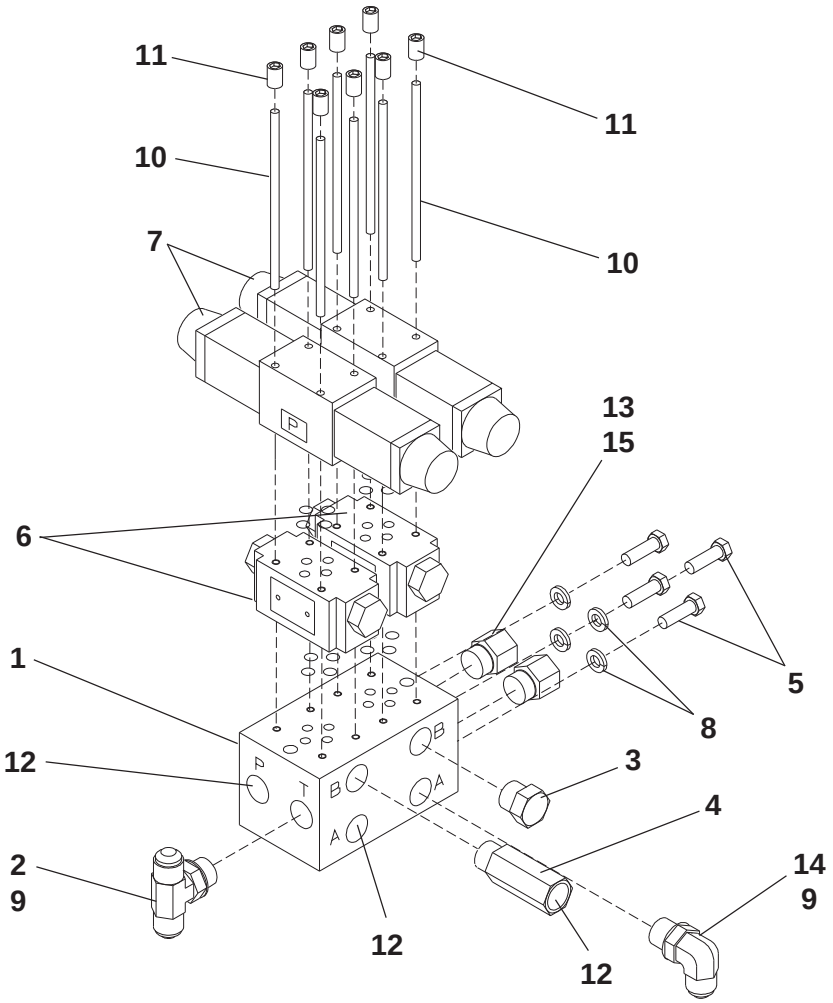


| Ref. No. | Part Number | Description | Quantity |
|---|---|---|---|
| | 9704-662-82 | Valve Assembly - Complete | - |
| 1 | 45252-501-03 | Block, Valve | 1 |
| 2 | 7430-303 | Tee, 3/4" x 1/2" Branch - with #16 O-Ring | 1 |
| 3 | 7430-382 | Plug, 3/4" - with #16 O-Ring | 1 |
| 4 | 45090-001-46 | Valve, Throttle | 1 |
| 5 | 7383-022 | Capscrew, 5/16" NC x 1" | 4 |
| 6 | 45252-014-16 | Valve, Holding - with O-Rings | 2 |
| 7 | 45252-005-53 | Valve, Solenoid - with O-Rings | 2 |
| 8 | 7014-002 | Lockwasher, 5/16" | 4 |
| 9 | 45191-509-10 | Caplugs, 3/4" (Not Shown) | 3 |
| 10 | 45890-501-23 | Stud, #10-24 x 2-7/8" | 8 |
| 11 | 45890-100-23 | Studnut | 8 |
| 12 | 45191-509-09 | Caplugs | 3 |
| 13 | 45720-775-29 | Fitting, 3/4" x 1/4"' - with #16 O-Ring | 2 |
| 14 | 7430-278 | Elbow, 90° 3/4" x 1/2" - with #16 O-Ring | 1 |
| 15 | 45191-509-05 | Caplugs | 2 |
| 16 | 45259-508-14 | O-Ring, 3/4" (For hydraulic fittings) | As Req |

Return to Table of Contents Page

TEREX
CEDARAPIDS

## Valve Assembly
### Left Hand Front Bulkhead

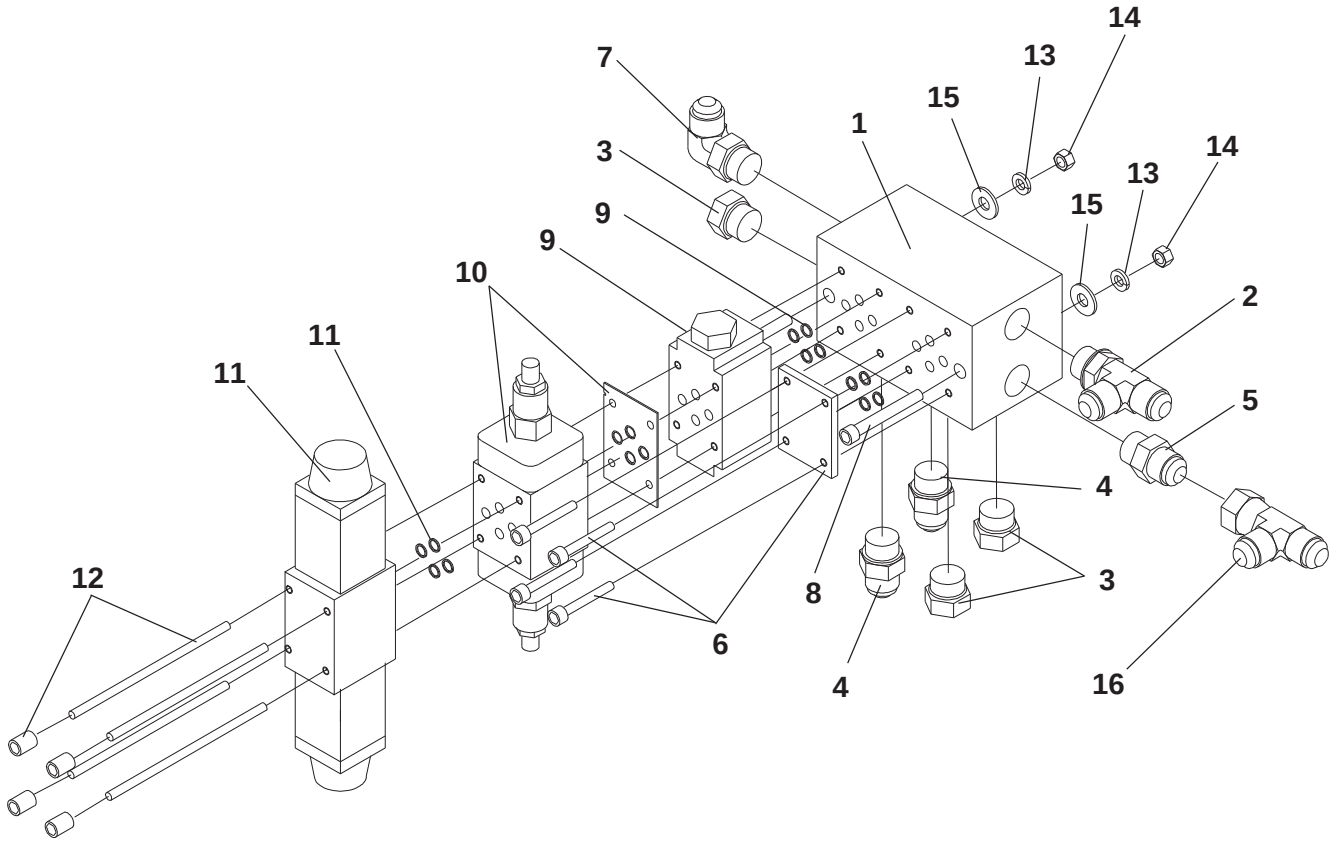


| Ref. No. | Part Number | Description | Quantity |
|---|---|---|---|
| | 9704-662-80 | Valve Assembly - Complete | - |
| 1 | 45252-501-03 | Block, Valve | 1 |
| 2 | 7430-292 | Tee, 1/2" Run - with #17 O-Ring | 1 |
| 3 | 7430-382 | Plug, 3/4" - with #18 O-Ring | 3 |
| | 45259-508-14 | O-Ring, 3/4" (For above fitting) | As Req |
| 4 | 7430-253 | Connector, 3/4" x 3/8" - with #18 O-Ring | 2 |
| 5 | 7430-255 | Connector, 3/4" x 1/2" - with #18 O-Ring | 1 |
| 6 | 45252-503-02 | Cover Plate (Includes Hardware & O-Rings) | 1 |
| 7 | 7430-278 | Elbow, 90° 3/4" x 1/2" - with #18 O-Ring | 1 |
| 8 | 7025-088 | Capscrew, 5/16" x 3" Sockethead | 2 |
| 9 | 45252-014-16 | Valve, Holding - with O-Rings | 1 |
| 10 | 45252-007-38 | Valve, Flow Control | 1 |
| 11 | 45252-005-53 | Valve, Solenoid - with O-Rings | 1 |
| 12 | 9704-663-01 | Bolt Kit | 1 |
| 13 | 7014-002 | Lockwasher, 5/16" | 2 |
| 14 | 7012-024 | Hex Nut, 5/16" | 2 |
| 15 | 7014-017 | Washer, 5/16" | 2 |
| 16 | 7430-345 | Tee, 1/2" Swivel Nut | 1 |
| 17 | 45259-508-46 | O-Ring, 1/2" (For hydraulic fittings) | As Req |
| 18 | 45259-508-14 | O-Ring, 3/4" (For hydraulic fittings) | As Req |

Return to Table of Contents Page

TEREX
CEDARAPIDS

## Valve Assembly
### Right Hand Front Bulkhead

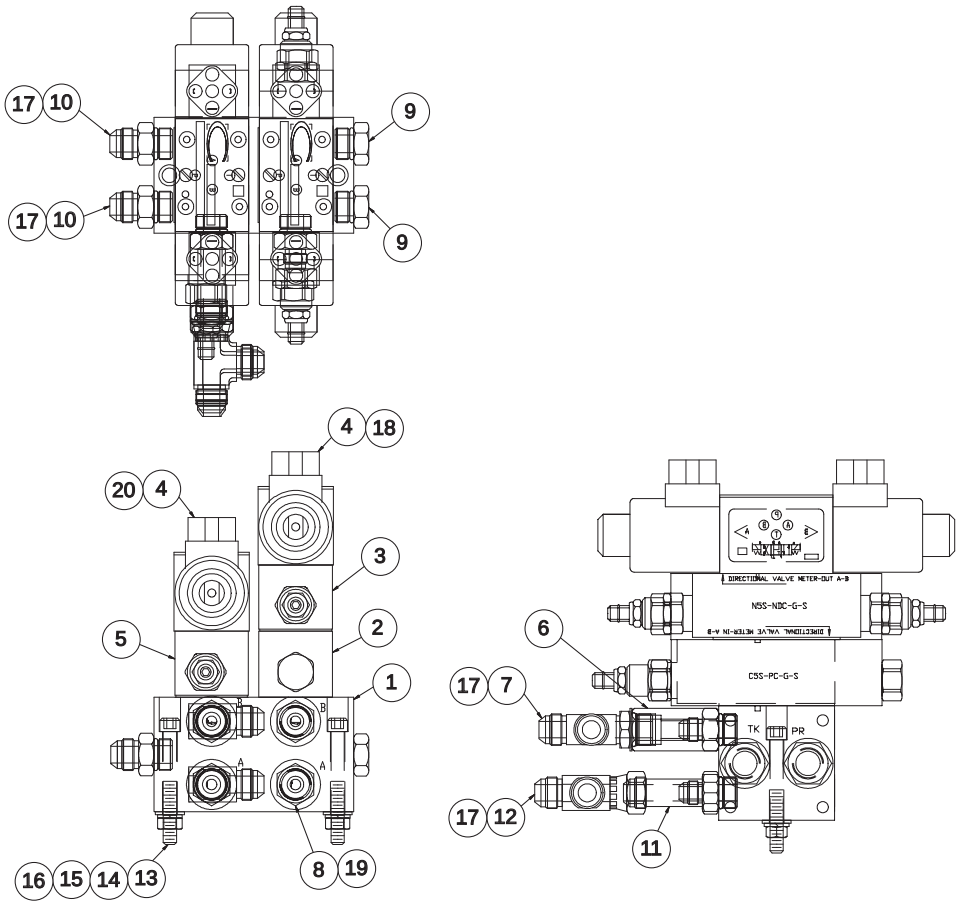


| Ref. No. | Part Number | Description | Quantity |
|---|---|---|---|
| | 0970466379 | Valve Assembly - Complete | - |
| 1 | 4525250103 | Block, Valve | 1 |
| 2 | 4525201410 | Valve, Holding | 1 |
| 3 | 4525200720 | Valve, Flow Control | 1 |
| 4 | 4525200553 | Valve, Solenoid - with O-Rings | 2 |
| 5 | 4525200739 | Valve, Needle - with O-Rings | 1 |
| 6 | 4509000146 | Valve, Throttle | 1 |
| 7 | 07430292 | Tee, 1/2" Run - with #18 O-Ring | 1 |
| 8 | 07430253 | Connector, 3/4" x 3/8" - with #19 O-Ring | 2 |
| 9 | 07430382 | Plug, 3/4" - with #19 O-Ring | 2 |
| 10 | 07430255 | Connector, 3/4" x 1/2" - with #19 O-Ring | 2 |
| 11 | 4572077582 | Fitting, 1/2" | 1 |
| 12 | 07430345 | Tee, 1/2" Swivel Nut - Male Branch | 1 |
| 13 | 07025088 | Capscrew, 5/16" x 3"Sockethead | 2 |
| 14 | 07014002 | Lockwasher, 5/16" | 2 |
| 15 | 07012024 | Hex Nut, 5/16" | 2 |
| 16 | 07014017 | Washer, Flat 5/16" | 2 |
| 17 | 4519150910 | Caplug, 3/4" | 6 |
| 18 | 0970466197 | Bolt Kit, 4.13" Studs w/Nuts | 1 |
| 19 | 4519150907 | Caplug, 1/2" | 2 |
| 20 | 0970466198 | Bolt Kit, 2.5" Studs w/Nuts | 1 |
| - | 4525950846 | O-Ring, 1/2" (For hydraulic fittings) | As Req |
| - | 4525950814 | O-Ring, 3/4" (For hydraulic fittings) | As Req |

Cedarapids
A Terex Company

## Electrical Modifications - Steering Assist

Parts List No. 05210WJN

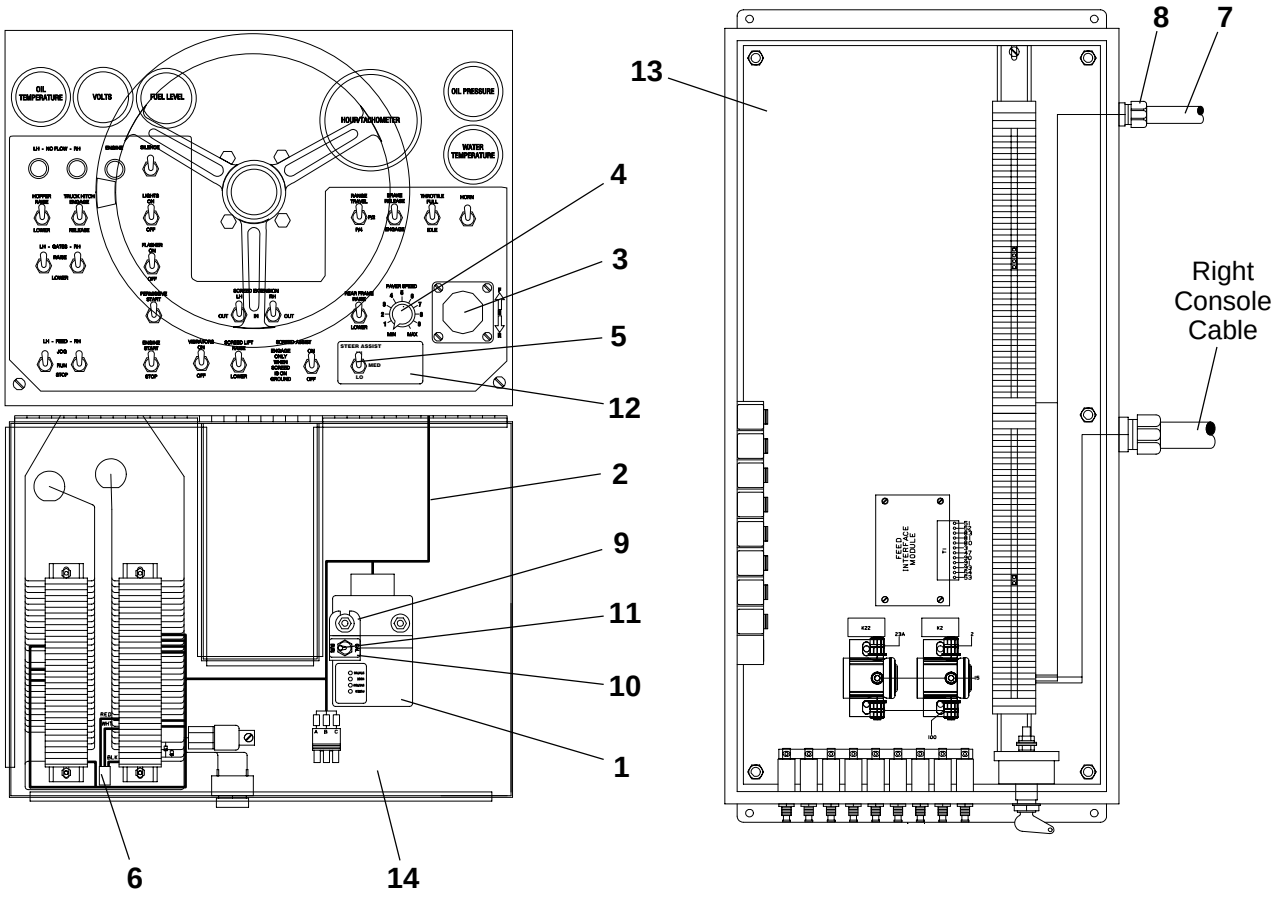


| Ref. No. | Part Number | Description | Quantity |
|---|---|---|---|
| 1 | 46061-525-30 | Controller, Dual Path | 1 |
| 2 | 46061-525-26-01 | Harness, Proportional Steer Assist | 1 |
| 3 | 46065-500-41 | Controller, Handle | 1 |
| 4 | 9704-416-50 | Potentiometer, Speed | 1 |
| 5 | 46200-009-41 | Switch, Toggle DP | 1 |
| 6 | 46061-525-26-02 | Harness, Divider | 1 |
| 7 | 9704-411-21 | Cable, Steering Sensor | 1 |
| 8 | 46026-016-02 | Locknut, 3/4" | 1 |
| 9 | 9704-416-48 | Bracket, Switch Mounting | 1 |
| 10 | 4418-857 | Emblem, Car-Run | 1 |
| 11 | 46200-009-11 | Switch, Toggle DPST | 1 |
| 12 | 4494-105-02 | Emblem, Steer Assist | 1 |
| 13 | Reference Only | See Main Junction Box & Cables - This Section | - |
| 14 | Reference Only | See Control Console - This Section | - |

Note: Items listed are replacements for standard components identified on Control Console and Main Junction Box parts pages. Consult factory for installation drawings and wiring details.

Return to Table of Contents Page

TEREX
CEDARAPIDS

Table of Contents

# Tractor Electrical Components - 05234JAK


| Ref No. | Description | Page No. |
|---|---|---|
| 1 | Tractor Electrical Components - Parts Listing | 2 |
| 2 | Control Console - Illustration | 3 |
| 3 | Control Console - Parts Listing | 4 |
| 4 | Main Junction Box - Illustration | 5 |
| 5 | Main Junction Box - Parts Listing | 6 |

Return to Table of Contents Page

TEREX
CEDARAPIDS

## Tractor Electrical Components

Parts List No. 05234JAK

| Ref # | Part Number | Description | Qty |
|---|---|---|---|
| 1 | 0970940030 | KIT, Tractor Electrical Components | 1 |
| 2 | 0970441792 | CONSOLE, *(See Form 24370-24371)* | 1 |
| 3 | 0970441785 | BOX, MAIN *(See Form 24284-24285)* | 1 |
| 4 | 0970437658 | HARNESS, Front | 1 |
| 5 | 0970437656 | HARNESS, Rear | 1 |
| 6 | 0970441133 | CABLE, MAIN BOX TO SCREED | 1 |
| 7 | 4619500102 | LOCKNUT, 3/4" | 2 |
| 8 | 0970940012 | KIT, Electrical Receptacle Plate | 1 |
| 9 | 0970441622 | PLATE, RH | 1 |
| 10 | 0970441623 | PLATE, LH | 1 |
| 11 | 4631300227 | COVER, CAP & CHAIN | 2 |
| 12 | 4631300250 | COVER, #14 CAP & CHAIN | 1 |
| 13 | 07383023 | CAPSCREW, 5/16"NC X 1-1/4 | 8 |
| 14 | 07014002 | WASHER, 5/16" LOCK | 12 |
| 15 | 07012024 | HEX NUT, 5/16" NC | 8 |
| 16 | 07504052 | MACH SCREW, #8-32 X 1/2" | 4 |
| 17 | 07438022 | WASHER, #8 SHKP LK SINT | 4 |
| 18 | 07440008 | HEX NUT, #8 NC | 4 |
| 19 | 07504007 | MACH SCREW, #4-40 1/2" | 12 |
| 20 | 07438019 | WASHER, #4 SHKP LK | 12 |
| 21 | 07440005 | HEX NUT, #4 NC | 12 |
| 22 | 4508052935 | CLAMP HALF, 1" | 12 |
| 23 | 4508052927 | PLATE, COVER FOR CLAMP | 6 |
| 24 | 07014002 | WASHER, 5/16" LOCK | 6 |
| 25 | 07383025 | CAPSCREW, 5/16"NC X 1-3/4 | 6 |
| 26 | 07509006 | CLAMP, 3/4" | 8 |
| 27 | 07509008 | HOSE CLAMP, 15/16" | 3 |
| 28 | 07383039 | CAPSCREW, 3/8"NC X 1-1/4 | 11 |
| 29 | 07014003 | WASHER, 3/8" LOCK | 11 |
| 30 | 07012025 | HEX NUT, 3/8" NC | 11 |
| 31 | 4508052929 | CLAMP, 1-1/4" HALF | 2 |
| 32 | 4508052930 | COVER, 1-1/4" CLAMP | 1 |
| 33 | 07014002 | WASHER, 5/16" LOCK | 1 |
| 34 | 07383028 | CAPSCREW, 5/16"NC X 2-1/2 | 1 |
| 35 | 0970401232 | SWITCH, TILT | 2 |
| 36 | 07198008 | YOKE PIN, 1/2" DIA | 2 |
| 37 | 07011017 | COTTER PIN, 1/8" X 1" | 2 |
| 38 | 04495031 | DIAGRAM, Electrical | 1 |

**NOTE: No Illustration Available**

Return to Table of Contents Page

TEREX
CEDARAPIDS

## Control Console

09704-417-92

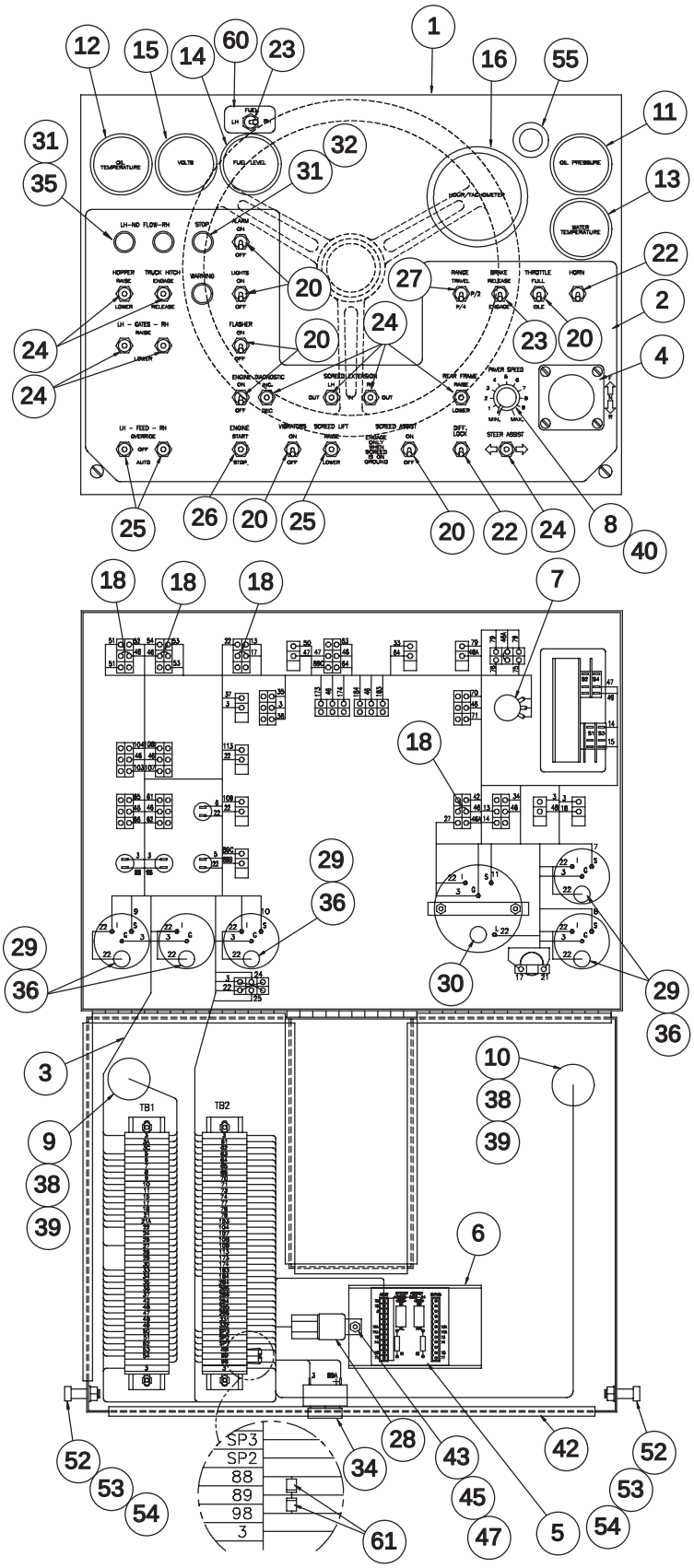

Return to Table of Contents Page

TEREX
CEDARAPIDS

## Control Console
09704-417-92

| Ref # | Part Number | Description | Qty |
|---|---|---|---|
| 1 | 0970450596 | Console, Rubber Tire | 1 |
| 2 | 0449410543 | Emblem, Rubber Tire | 1 |
| 3 | 0970437691 | Harness, Rubber Tire Console | 1 |
| 4 | 4606550040 | Controller Handle | 1 |
| 5 | 4606550034 | Module, Steer Assist | 1 |
| 6 | 4601500124 | Snaptrack, PVC | 1 |
| 7 | 0970441636 | Potentiometer, Speed | 1 |
| 8 | 4607550005 | Knob, 1" | 1 |
| 9 | 0970441134 | Cable, LH | 1 |
| 10 | 0970441135 | Cable, RH | 1 |
| 11 | 4586500241 | Gauge, Oil Pressure | 1 |
| 12 | 4586500316 | Gauge, Oil Temp. | 1 |
| 13 | 4586500317 | Gauge, Water Temp. | 1 |
| 14 | 4591501208 | Gauge, Fuel Level | 1 |
| 15 | 4622500124 | Meter, Voltmeter - 12VDC | 1 |
| 16 | 4622501017 | Meter, Tach/Hour | 1 |
| 18 | 4626050103 | Jumper, Switch Block | 7 |
| 20 | 4620000906 | Switch, Toggle | 7 |
| 22 | 4620000911 | Switch, Toggle | 2 |
| 23 | 4620000918 | Switch, Toggle | 2 |
| 24 | 4620000921 | Switch, Toggle | 9 |
| 25 | 4620000940 | Switch, Toggle | 3 |
| 26 | 4620000941 | Switch, Toggle | 1 |
| 27 | 4620000944 | Switch, Toggle | 1 |
| 28 | 4632500243 | Switch, Toggle | 1 |
| 29 | 4627000509 | Light Kit, Meter | 5 |
| 30 | 4627000510 | Light Kit, 12VDC | 1 |
| 31 | 4627000244 | Lamp, 14VDC | 4 |
| 32 | 4627050036 | Lens, Red | 1 |
| 33 | 4606150062 | Socket | 4 |
| 34 | 4601000129 | Alarm, Signal | 1 |
| 35 | 4627050037 | Lens, Amber | 3 |
| 36 | 4627500102 | Wire Lug | 5 |
| 37 | 07437135 | Machine Screw, 1/4" NC x 3/4" | 2 |
| 38 | 4602601514 | Connector, 1-1/4" 90 Degree | 2 |
| 39 | 4619500104 | Locknut | 2 |
| 40 | 4589010006 | Seal Nut | 1 |
| 41 | 4589010029 | Nut, 1/4" Self Retaining | 2 |
| 42 | 4589080031 | Edging | 4.7' |
| 43 | 07504066 | Machine Screw, #10-32 x 1/2" | 2 |
| 44 | 07504052 | Machine Screw, #8-32 x 1/2" | 4 |
| 45 | 07438023 | Washer, #10 SHKP Lock | 2 |
| 46 | 07438022 | Washer, #8 SHKP Lock | 4 |
| 47 | 07440023 | Hex Nut, #10 NF | 2 |
| 48 | 07440008 | Hex Nut, #8 NC | 4 |
| 52 | 07455012 | Shoulder Screw, 3/8" x 5/8" | 2 |
| 53 | 07012024 | Hex Nut, 5/16" NC | 2 |
| 54 | 07014002 | Washer, 5/16" Lock | 2 |
| 55 | 4608540146 | E-Stop | 1 |
| 60 | 0449410511 | Emblem, Fuel Select | 1 |
| 61 | 4695500143 | Diode, 600V - 6A | 2 |

Return to Table of Contents Page

TEREX
CEDARAPIDS

## Main Junction Box

09704-417-85

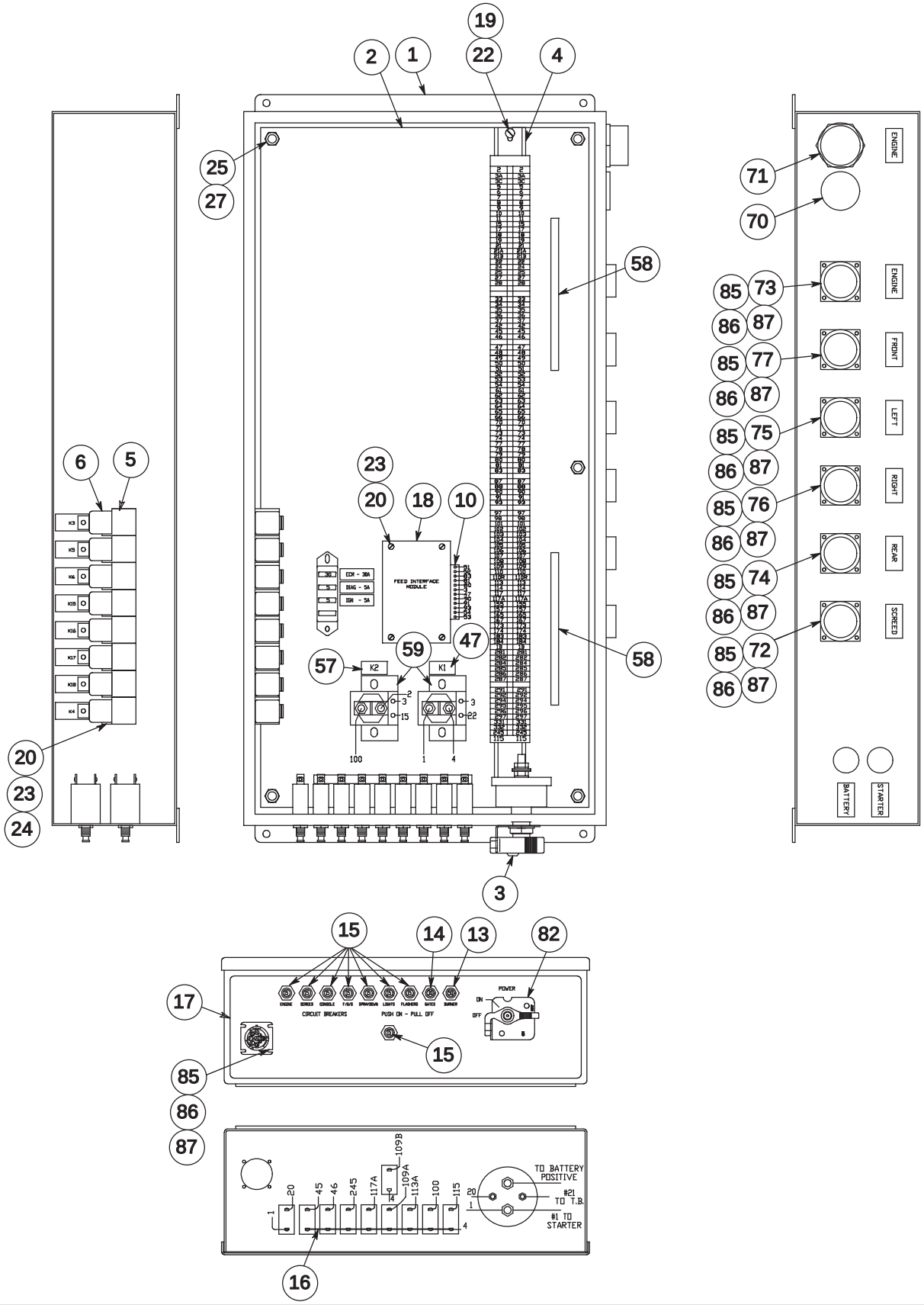

Return to Table of Contents Page

TEREX
CEDARAPIDS

## Main Junction Box

09704-417-85

| Ref # | Part Number | Description | Qty |
|---|---|---|---|
| 1 | 0970441753 | Box, Main | 1 |
| 2 | 0970441751 | Plate, Mounting | 1 |
| 3 | 4620001161 | Switch, Key | 1 |
| 5 | 4601500149 | Socket, Relay | 8 |
| 6 | 4632500243 | Relay, Power | 8 |
| 10 | 4695601302 | Plug, 12 Position | 1 |
| 13 | 4616500501 | Breaker, 50A | 1 |
| 14 | 4616500484 | Breaker, 30A | 1 |
| 15 | 4616500483 | Breaker, 15A | 8 |
| 16 | 4616550803 | Bus Bar | 1 |
| 17 | 04418888 | Emblem, Main Box | 1 |
| 18 | 4606550039 | Feed Interface Module | 1 |
| 19 | 07504064 | Screw, #10-32 x 3/8" | 3 |
| 20 | 07504055 | Screw, #8-32 x 3/4" | 8 |
| 21 | 07504050 | Screw, #8-32 x 3/8" | 9 |
| 22 | 07438023 | Washer, #10 SHKP Lock | 7 |
| 23 | 07438022 | Washer, #8 SHKP Lock | 13 |
| 24 | 07440008 | Hex Nut, #8 NC | 9 |
| 25 | 07014003 | Washer, 3/8" Lock | 6 |
| 26 | 07439018 | Washer, 5/16" Flat *(Not Shown)* | 2 |
| 27 | 07012003 | Hex Nut, 3/8" NC | 6 |
| 58 | 4626000207 | Ground Bar | 2 |
| 59 | 4601500163 | Contactor | 2 |
| 60 | 07435130 | Machine Screw, 1/4" NF x 3/8" | 4 |
| 61 | 07435025 | Washer | 4 |
| 70 | 4608500401 | Cover | 1 |
| 71 | 0970437675 | Harness, QSB Engine | 1 |
| 72 | 0970437664 | Receptacle, Screed | 1 |
| 73 | 0970437693 | Receptacle, Engine | 1 |
| 74 | 0970437683 | Receptacle, Rear Harness | 1 |
| 75 | 0970437659 | Receptacle, Console 1 | 1 |
| 76 | 0970437660 | Receptacle, Console 2 | 1 |
| 77 | 0970437662 | Receptacle, Front Harness | 1 |
| 82 | 4620001162 | Switch, Disconnect Lock | 1 |
| 85 | 07504007 | Screw, #4-40 x 1/2" | 28 |
| 86 | 07438019 | Washer, #4 SHKP Lock | 28 |
| 87 | 07440005 | Hex Nut, #4 NC | 28 |

Cedarapids
A Terex Company

## Air Cleaner Assembly

Parts List No 05032GSK

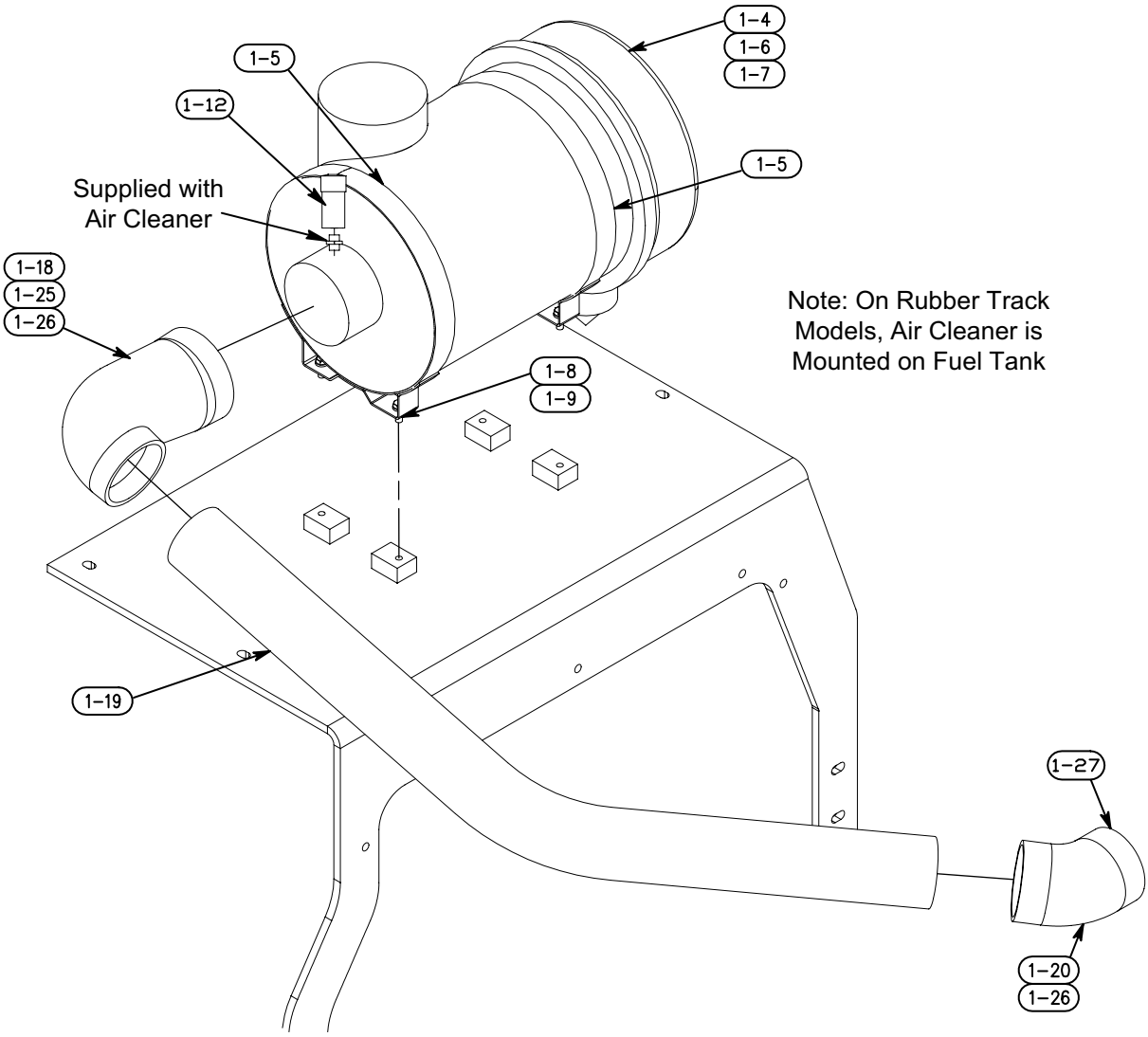


| Ref. No. | Part Number | Description | Quantity |
|---|---|---|---|
| 1-4 | 45690-001-33 | Cleaner, Air QSB5.9 | 1 |
| 1-5 | 45690-001-33-03 | Mtg. Band, Air Cleaner | 2 |
| 1-8 | 07383-038 | Capscrew, 3/8" NC x 1" | 4 |
| 1-9 | 07014-003 | Washer, 3/8" Lock | 4 |
| 1-12 | 45690-001-26-03 | Indicator, Restriction | 1 |
| 1-18 | 45340-001-22 | Adapter, 4" x 5" Red. Elbow | 1 |
| 1-19 | 09704-323-29 | Tube, Air Inlet | 1 |
| 1-20 | 45340-001-26 | Elbow, 45° x 4" I.D. | 1 |
| 1-25 | 45191-007-22 | Clamp, 5.625" T-Bolt | 1 |
| 1-26 | 45191-007-20 | Clamp, 4.5" T-Bolt | 2 |
| 1-27 | 45191-007-81 | Clamp, T-Bolt | 1 |

TEREX
CEDARAPIDS

## Battery Mounting & Cables

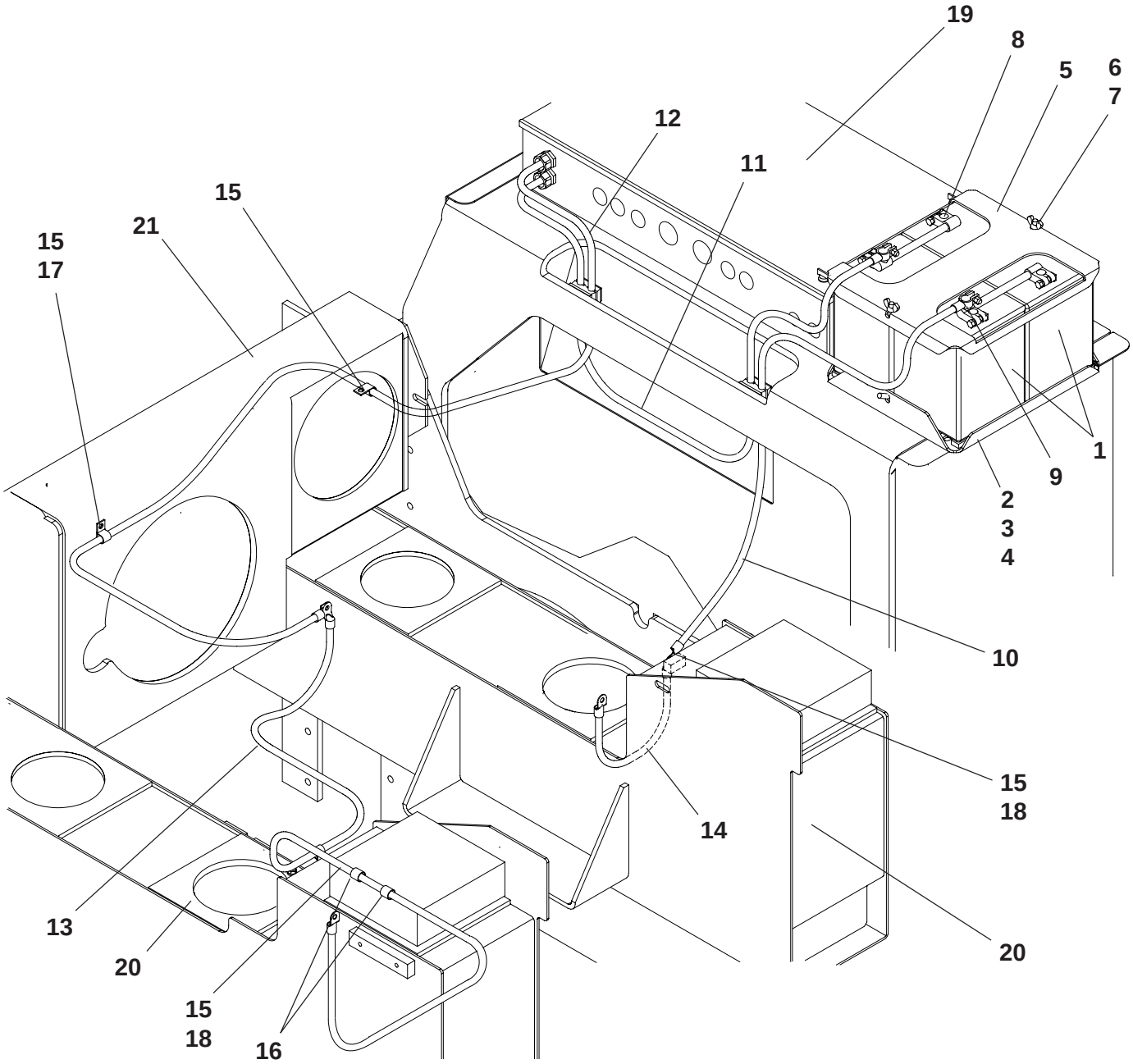


Note: Typical illustration shown. Appearance and quantity of specific components may vary depending on configuration.

TEREX
CEDARAPIDS

## Battery Mounting & Cables

Parts List No. 5032GWL

| Ref. No. | Part Number | Description | Quantity |
|---|---|---|---|
| 1 | 45040-250-08 | Battery, 12V | 2 |
| 2 | 9704-318-62 | Pad, Battery | 1 |
| 3 | 9704-318-60 | Mount, Battery Base | 1 |
| 4 | 7072-194 | Carriage Bolt, 1/2" NC x 1-3/4" | 2 |
| | 7072-101 | Carriage Bolt, 1/2" NC x 1-1/4" | 2 |
| | 7014-020 | Washer, 1/2" | 4 |
| | 7014-005 | Lockwasher, 1/2" | 4 |
| | 7012-027 | Hex Nut, 1/2" NC | 4 |
| 5 | 9704-318-61 | Clamp, Battery Hold Down | 1 |
| 6 | 4445-406-08-02 | Bolt, Hook | 2 |
| 7 | 7056-011 | Wing Nut, 3/8" NC | 2 |
| 8 | Not Required | Jumper, Battery Negative | 1 |
| 9 | Not Required | Jumper, Battery Positive | 1 |
| 10 | 9704-411-23 | Cable, Negative to Engine - With Battery Jumper | 1 |
| 11 | 9704-411-24 | Cable, Positive to Junction Box - With Battery Jumper | 1 |
| 12 | 9704-411-25 | Cable, Starter | 1 |
| 13 | 9704-411-26 | Cable, Starter to Hood Raise | 1 |
| 14 | 9704-411-22 | Cable, Jumper | 1 |
| 15 | 7509-004 | Hose Clamp, 3/8" | 3 |
| 16 | Consult Factory | Miscellaneous Clamp Hardware | - |
| 17 | Consult Factory | Miscellaneous Clamp Hardware | - |
| 18 | 7383-038 | Capscrew, 3/8" NC x 1" | 2 |
| | 7014-003 | Lockwasher, 3/8" | 2 |
| 19 | Reference Only | See Main Junction Box & Cables - Elsewhere in this manual | - |
| 20 | Reference Only | See Hydraulic Reservoir - Elsewhere in this manual | - |
| 21 | Reference Only | See Pump Drives - Elsewhere in this manual | - |

TEREX
CEDARAPIDS

## Fuel System

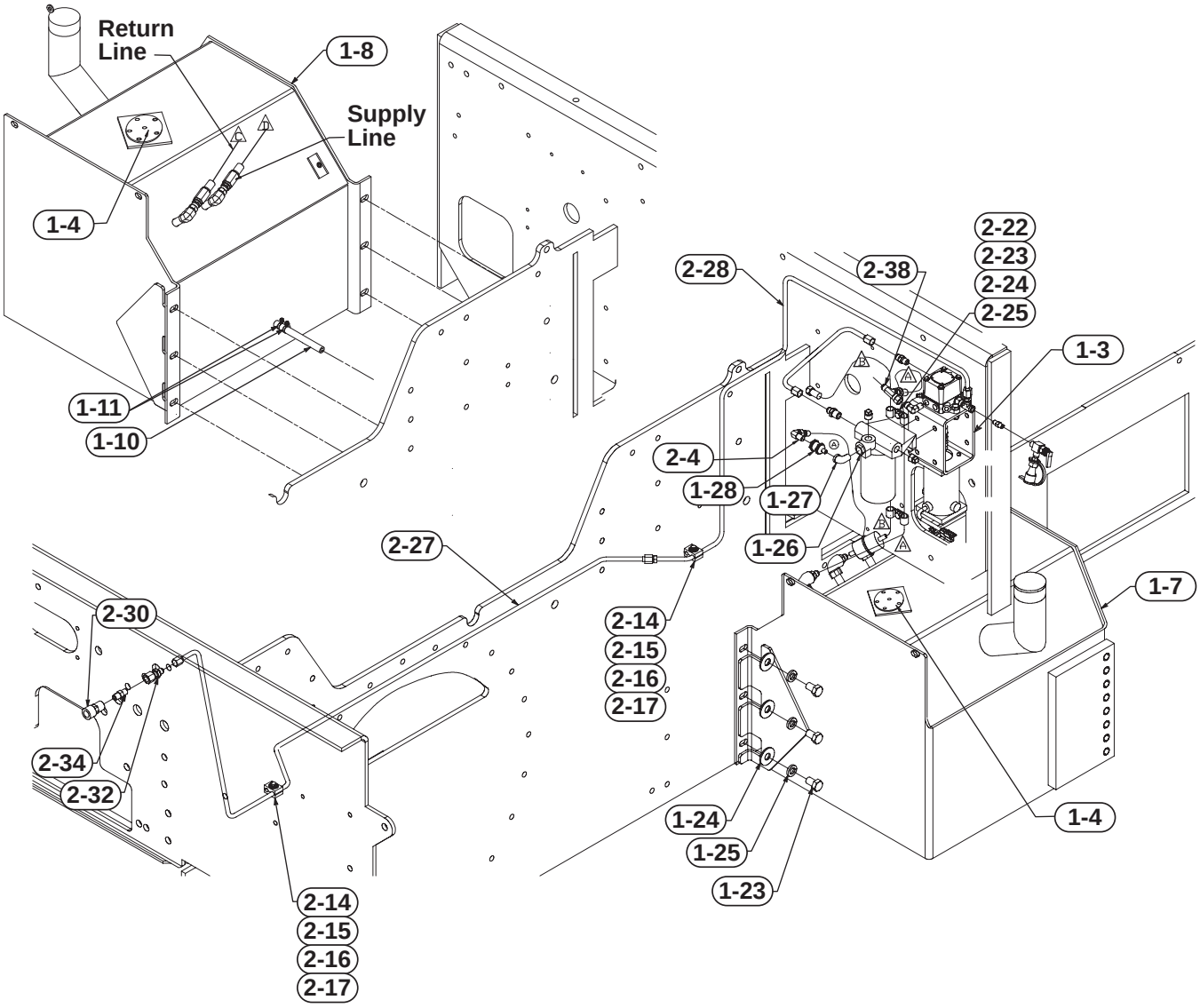

TEREX
CEDARAPIDS

# Fuel System

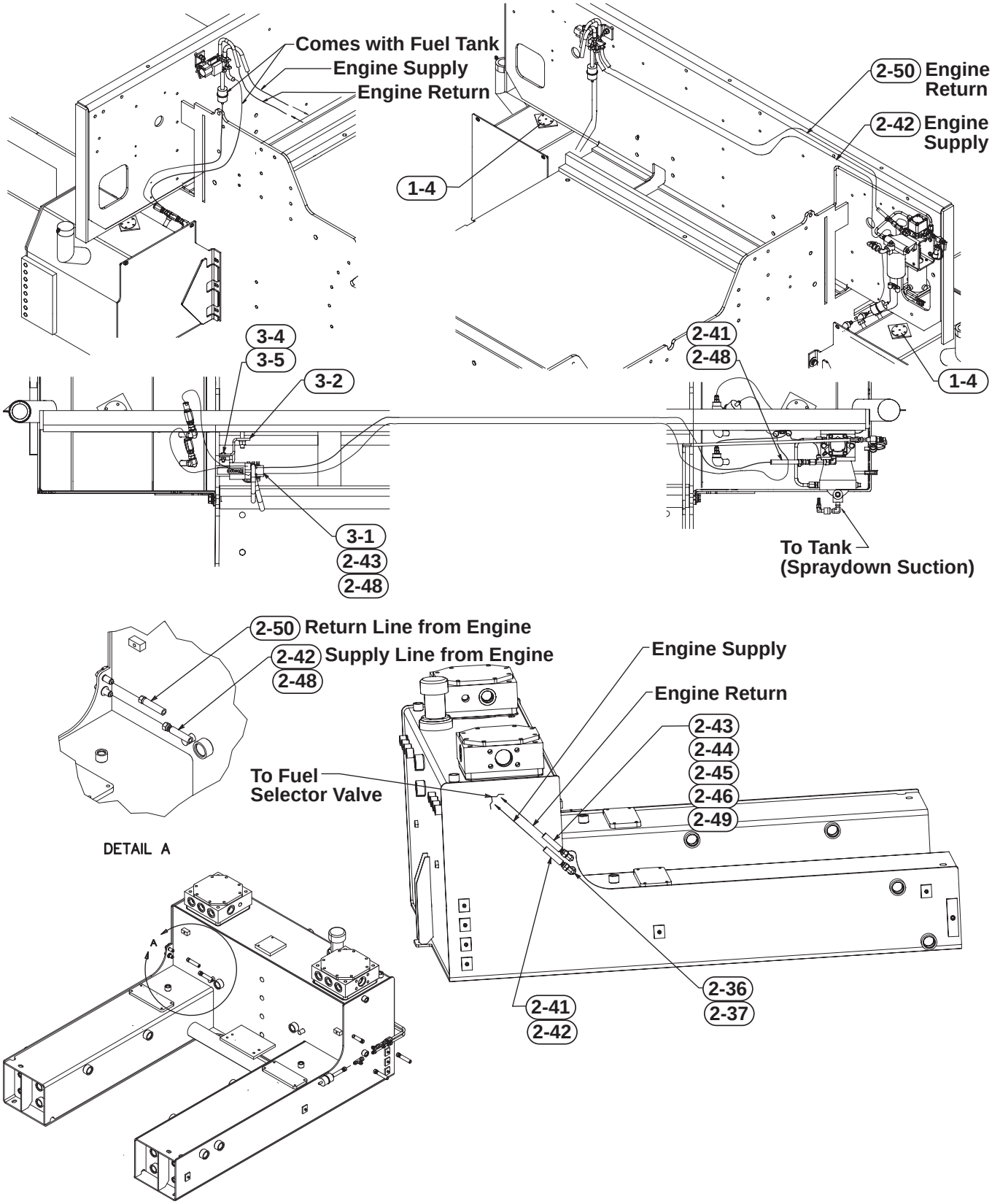

TEREX
CEDARAPIDS

## Fuel System

Parts List No. 05234PGE

| Ref # | Part Number | REV | Part Name | Description | Qty |
|---|---|---|---|---|---|
| 1-1 | 0970432495 | | ASSEMBLY | FUEL SYSTEM | REF |
| 1-3 | 0970830037 | A | SUB ASSY | FUEL PUMP *(See Form 24251)* | 1 |
| 1-4 | 4251551201 | M | SENDER | | 2 |
| 1-6 | 0970930029 | - | KIT | FUEL TANK | 1 |
| 1-7 | 0970432492 | | FUEL TANK | RH *(See Form 24378)* | 1 |
| 1-8 | 0970432491 | | FUEL TANK | LH *(See Form 24377)* | 1 |
| 1-10 | 0970431622 | | HOSE | FUEL | 1 |
| 1-11 | 4519100794 | | CLAMP | T-BOLT | 4 |
| 1-22 | 07383230 | | CAPSCREW | 5/8"NC X 1-1/4 | 10 |
| 1-23 | 07383257 | | CAPSCREW | 5/8" NC X 1" | 2 |
| 1-24 | 07097013 | | WASHER | 5/8" SAE | 12 |
| 1-25 | 07014007 | | WASHER | 5/8" LOCK | 12 |
| 1-29 | 07430020 | | ELBOW | 3/8"NPT - 3/8"JIC | 1 |
| 2-14 | 4508052922 | - | CLAMP HALF | FOR 3/8" TUBE | 4 |
| 2-15 | 07014016 | | WASHER | 1/4" | 2 |
| 2-16 | 07014001 | | WASHER | 1/4" LOCK | 2 |
| 2-17 | 07383006 | | CAPSCREW | 1/4"NC X 1" | 2 |
| 2-22 | 07509004 | | HOSE CLAMP | 5/8" | 4 |
| 2-23 | 07383039 | | CAPSCREW | 3/8"NC X 1-1/4 | 2 |
| 2-24 | 07014003 | | WASHER | 3/8" LOCK | 2 |
| 2-25 | 07012025 | | HEX NUT | 3/8" NC | 2 |
| 2-27 | 0970466002 | A | TUBE ASSY | SCREED FUEL REAR | 1 |
| 2-28 | 0970466003 | - | TUBE ASSY | SCREED FUEL FRONT | 1 |
| 2-30 | 451915041401 | A | COUPLER | 1/4"QD | 1 |
| 2-32 | 07430335 | | CONNECTOR | UNION | 1 |
| 2-34 | 4572077021 | - | NIPPLE | 1/4" X 1/4" | 1 |
| 2-36 | 07430279 | | ELBOW | #10SAE #8JIC | 2 |
| 2-37 | 07014019 | | WASHER | 7/16" | 2 |
| 2-38 | 07430344 | | TEE | 3/8"JIC SWIVEL NUT | 1 |
| 2-41 | 07431008 | | HOSE END | 3/8"HOSE SWIVEL | 3 |
| 2-42 | 5003000202 | D | HOSE | 3/8" ID | 15' |
| 2-43 | 4519100475 | A | CLAMP | 5/8" MAX HOSE | 4 |
| 2-44 | 07430323 | | REDUCER | 3/8" TO 1/4" | 1 |
| 2-45 | 07430206 | | NUT | 3/8"JIC | 1 |
| 2-46 | 5003000131 | - | HOSE | FUEL LINE SAE30R7 | 15' |
| 2-47 | 459300011802 | | STRAINER | FUEL | 2 |
| 2-48 | 4519100428 | - | CLAMP | 25/32"HOSE | 7 |
| 2-49 | 07431006 | | HOSE END | 1/4" HOSE SWIVEL | 1 |
| 2-50 | 0970432388 | - | HOSE ASSY | 5/16" ID X 90" | 2 |
| 3-1 | 4525201414 | A | VALVE | FUEL SELECTOR | 1 |
| 3-2 | 0970432285 | - | BRACKET | VALVE | 1 |
| 3-4 | 07383022 | | CAPSCREW | 5/16" NC X 1" | 2 |
| 3-5 | 07014002 | | WASHER | 5/16" LOCK | 2 |

TEREX
CEDARAPIDS

## Fuel Tank - RH

Parts List No. 0970432492

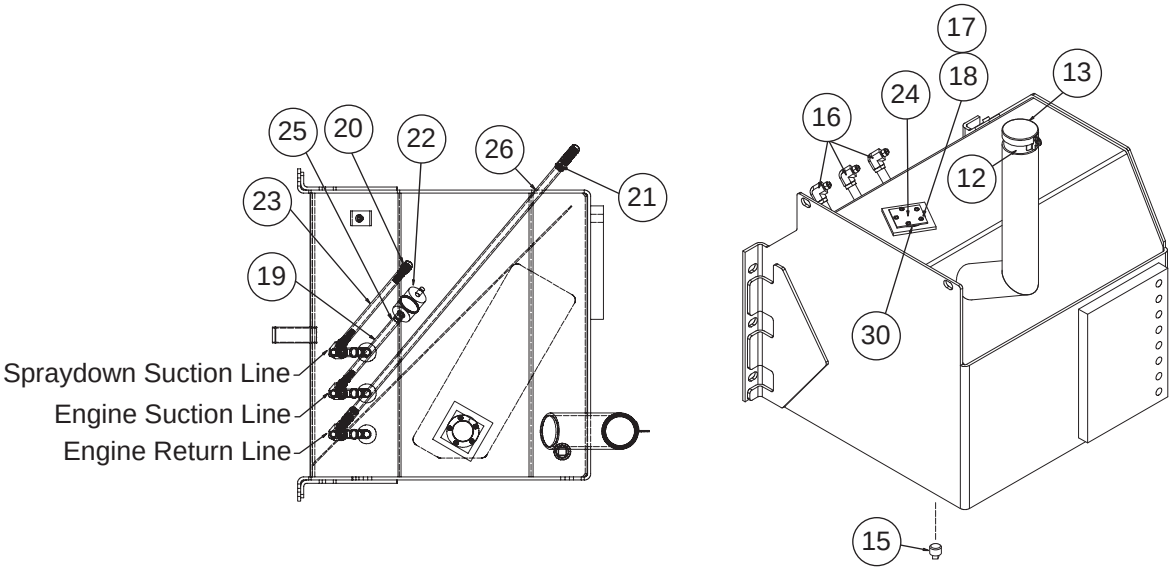


| Ref. No. | Part Number | Description | Quantity |
|---|---|---|---|
| 12 | 4521550402 | Filler Flange | 1 |
| 13 | 4521550105 | Filler Cap | 1 |
| 15 | 07027003 | Drain Plug, 3/4" | 1 |
| 16 | 07430090 | Elbow | 3 |
| 17 | 07007020 | Washer | 5 |
| 18 | 07504050 | Machine Screw, #8-32 x 3/8" | 5 |
| 19 | | Hose, 3/8" ID x 21" | 1 |
| 20 | 07431008 | Hose End, 3/8" F.S. | 3 |
| 21 | 07430239 | Plug, #6 JIC | 2 |
| 22 | 459300011802 | Strainer | 1 |
| 23 | | Hose, 3/8" ID x 42" | 1 |
| 24 | 0520480023 | Cover | 1 |
| 25 | 4519100428 | Hose Clamp | 1 |
| 26 | 0970432447 | Hose Assembly, 5/16" ID x 32" | 1 |
| 30 | 4591500902 | Gasket | 1 |

TEREX
CEDARAPIDS

## Fuel Tank - LH

Parts List No. 0970432491

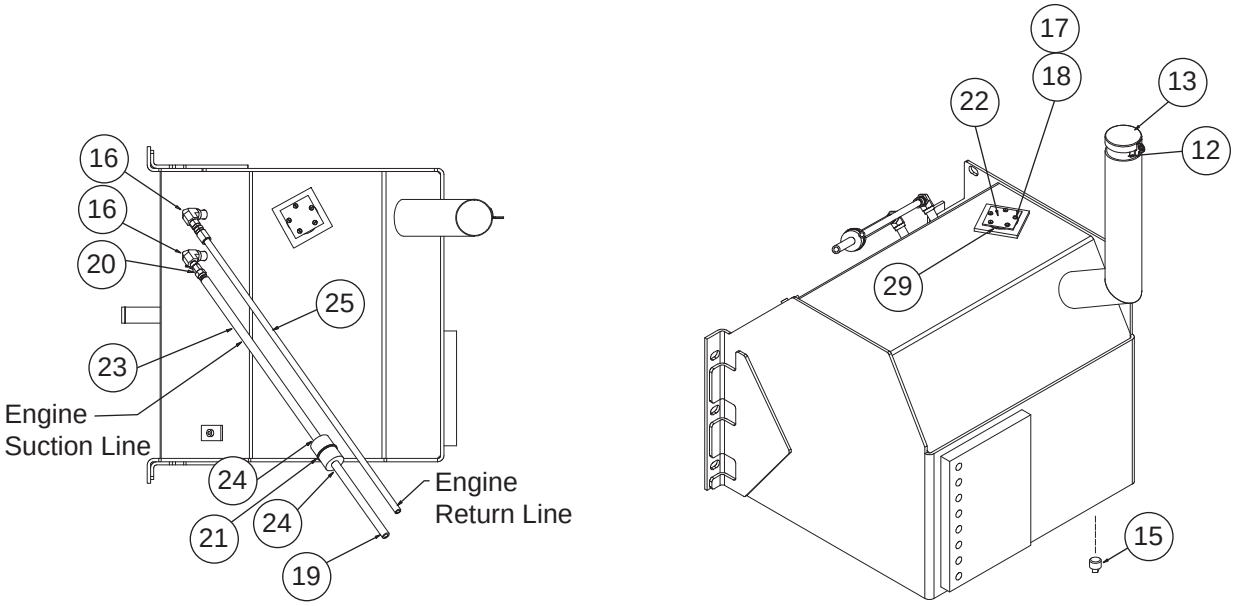


| Ref. No. | Part Number | Description | Quantity |
|---|---|---|---|
| 12 | 4521550402 | Filler Flange | 1 |
| 13 | 4521550105 | Filler Cap | 1 |
| 15 | 07027003 | Drain Plug, 3/4" | 1 |
| 16 | 07430090 | Elbow | 2 |
| 17 | 07007020 | Washer | 5 |
| 18 | 07504050 | Machine Screw, #8-32 x 3/8" | 5 |
| 19 | | Hose, 3/8" ID x 22" | 1 |
| 20 | 07431008 | Hose End, 3/8" F.S. | 2 |
| 21 | 459300011802 | Strainer | 1 |
| 22 | 0520480023 | Cover | 1 |
| 23 | | Hose, 3/8" ID x 18" | 1 |
| 24 | 4519100428 | Hose Clamp | 2 |
| 25 | 0970432357 | Hose Assembly, 5/16" ID x 40" | 1 |
| 29 | 4591500902 | Gasket | 1 |

TEREX
CEDARAPIDS

## Fuel Pump Sub-Assembly

Parts List No. 0970830037

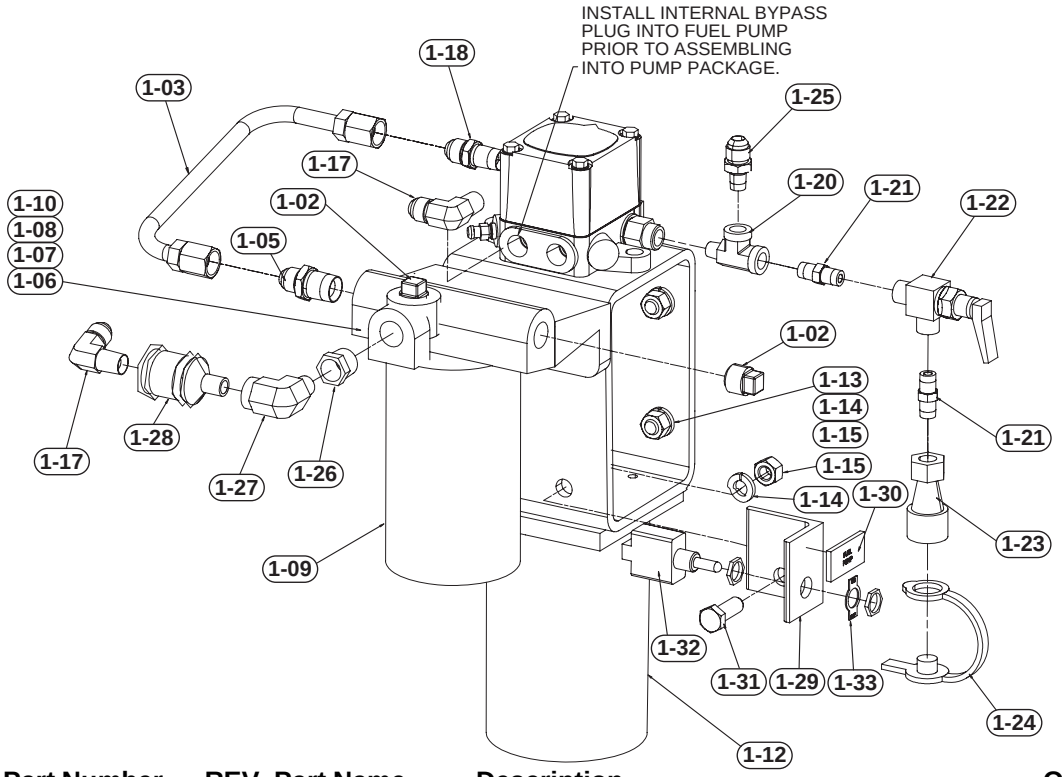


| Ref # | Part Number | REV | Part Name | Description | Qty |
|---|---|---|---|---|---|
| 1-02 | 07024003 | | PIPE PLUG | 3/8" | 2 |
| 1-03 | 0970466140 | A | TUBE ASSY | FUEL PUMP | 1 |
| 1-05 | 07430005 | | CONNECTOR | 3/8"NPT-3/8"JIC | 1 |
| 1-06 | 07014003 | | WASHER | 3/8" LOCK | 2 |
| 1-07 | 07012025 | | HEX NUT | 3/8" NC | 2 |
| 1-08 | 07383039 | | CAPSCREW | 3/8"NC X 1-1/4 | 2 |
| 1-09 | 451750014301 | A | ELEMENT | FUEL FILTER | 1 |
| 1-10 | 451750014302 | - | FILTER | HEAD | 1 |
| 1-12 | 4565252811 | E | FUEL PUMP | | 1 |
| 1-13 | 07383039 | | CAPSCREW | 3/8"NC X 1-1/4 | 4 |
| 1-14 | 07014003 | | WASHER | 3/8" LOCK | 5 |
| 1-15 | 07012025 | | HEX NUT | 3/8" NC | 5 |
| 1-17 | 07430019 | | ELBOW | 1/4"PIPE X #6 JIC | 2 |
| 1-18 | 07430004 | | CONNECTOR | 1/4"P X #6 JIC | 1 |
| 1-20 | 4572077614 | - | TEE | 1/8" MALE BRANCH | 1 |
| 1-21 | 4572077054 | - | NIPPLE | 1/8" PARKER | 2 |
| 1-22 | 4525200464 | A | VALVE | SHUTOFF | 1 |
| 1-23 | 451915042903 | - | COUPLER | 1/8"NPT BRASS | 1 |
| 1-24 | 451915042901 | - | PLUG | DUST | 1 |
| 1-25 | 07430043 | | CONNECTOR | 3/8"JIC X1/8"MP | 1 |
| 1-26 | 07107002 | | BUSHING | 3/8 X 1/4 | 1 |
| 1-27 | 4572077002 | A | ELBOW | 90DEG STR 1/4"XH | 1 |
| 1-28 | 4525900691 | - | VALVE | 1/4" FUEL LINE CHECK | 1 |
| 1-29 | 0970441643 | A | BRACKET | SWITCH | 1 |
| 1-30 | 07515047 | | NAMEPLATE | FUEL PUMP | 1 |
| 1-31 | 07383038 | | CAPSCREW | 3/8" NC X 1" | 1 |
| 1-32 | 4620000906 | A | SWITCH | SPST TOGGLE | 1 |
| 1-33 | 4620050802 | - | TAG | TOGGLE SWITCH | 1 |
| 1-34 | 0970441082 | | HARNESS | SWITCH (Not Shown) | 1 |

TEREX
CEDARAPIDS

## Fuel Pump Assembly

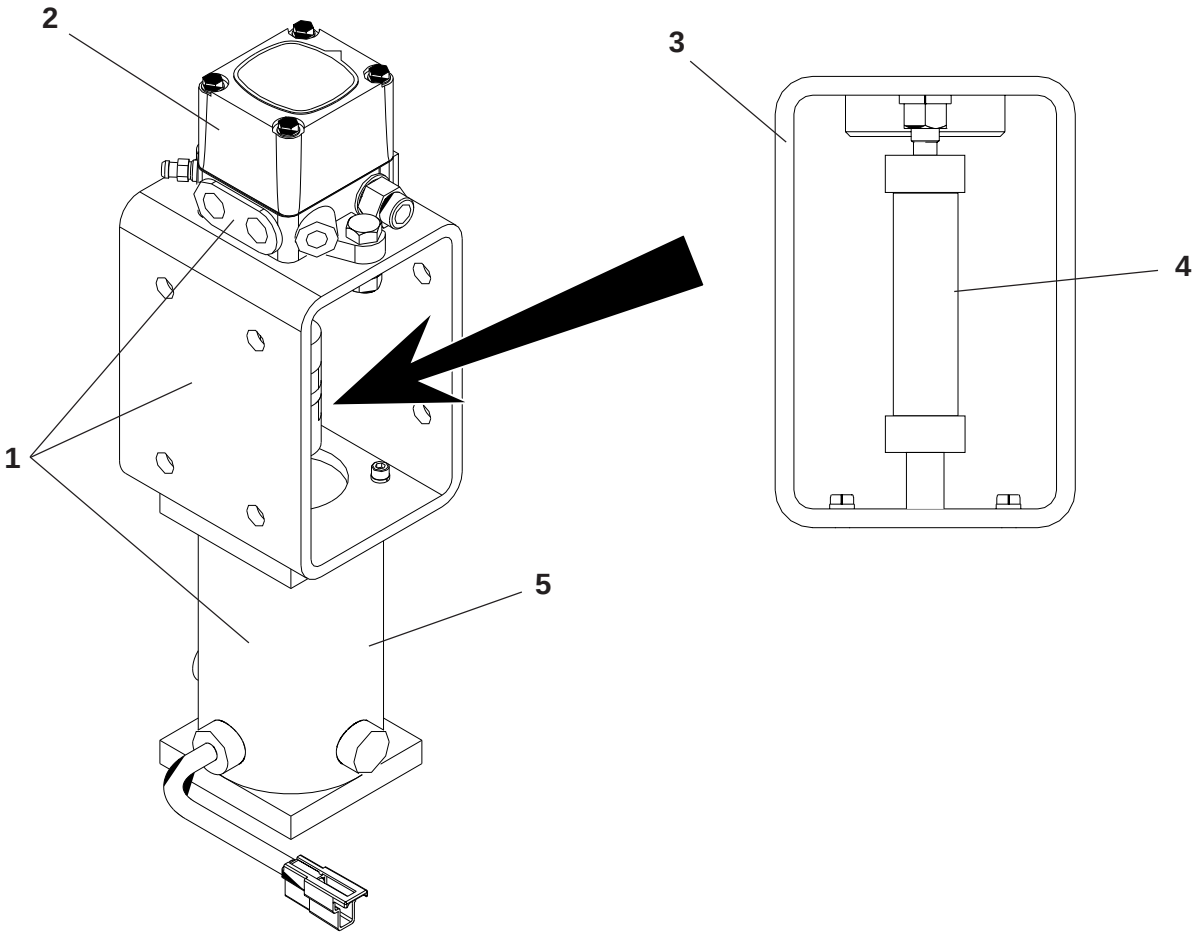


| Ref. No. | Part Number | Description | Quantity |
|---|---|---|---|
| 1 | 45652-528-11 | Pump, Fuel - Complete | 1 |
| 2 | 45652-528-11-01 | Pump, Fuel | 1 |
| 3 | 9704-555-80 | Mount, Fuel Pump | 1 |
| 4 | 45652-528-11-03 | Coupling, 7/16" x 1/2" | 1 |
| 5 | 9704-316-07 | Motor, Fuel Pump w/Seal | 1 |
| | 46098-400-14 | Motor, Electric | 1 |
| | 9704-316-08 | Washer, Motor Seal | 1 |
| | 45210-001-14 | V-Seal - V-12S | 1 |

TEREX
CEDARAPIDS

## Hydraulic Reservoir Package

Parts List No. 05234QAG

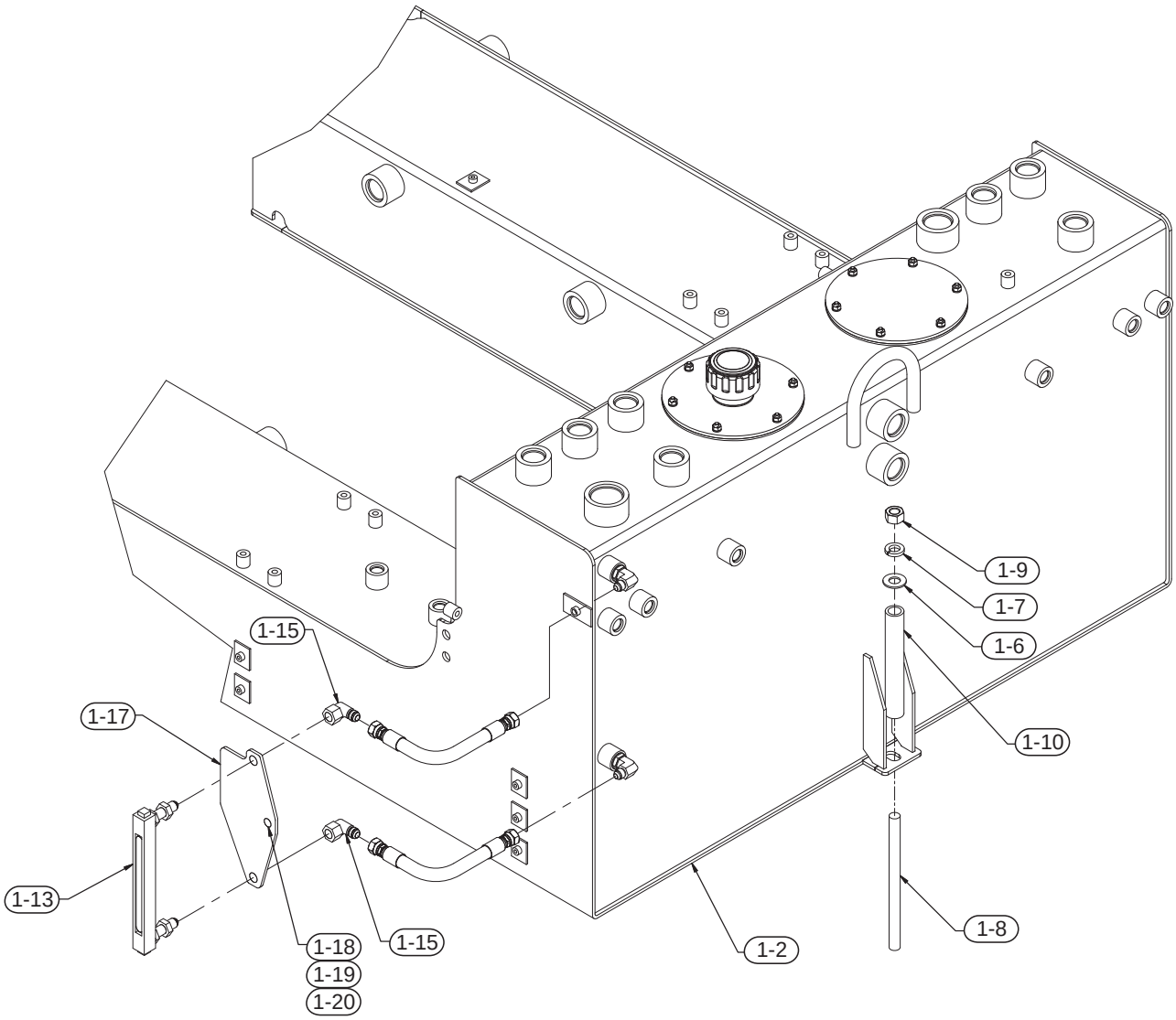


| Ref. No. | Part Number | Description | Quantity |
|---|---|---|---|
| 1-2 | 0970865029 | Hydraulic Reservoir Sub-Assembly - Following Pages | 1 |
| 1-6 | 07097013 | Washer, 5/8" SAE | 3 |
| 1-7 | 07014007 | Lockwasher, 5/8" | 3 |
| 1-8 | 07187029 | Adjusting Bolt | 1 |
| 1-9 | 07012029 | Hex Nut, 5/8" NC | 1 |
| 1-10 | 0970432321 | Spacer, Bolt | 1 |
| 1-13 | 4586500150 | Gauge, Liquid Level | 1 |
| 1-15 | 07430383 | Elbow, 3/8" Swivel Nut | 2 |
| 1-17 | 0970466330 | Plate, Sight Gauge Mounting | 1 |
| 1-18 | 07383070 | Capscrew, 1/2" x 1-1/2" | 1 |
| 1-19 | 07014005 | Lockwasher, 1/2" | 1 |
| 1-20 | 07012027 | Hex Nut, 1/2" | 1 |

TEREX
CEDARAPIDS

## Hydraulic Reservoir Sub-Assembly

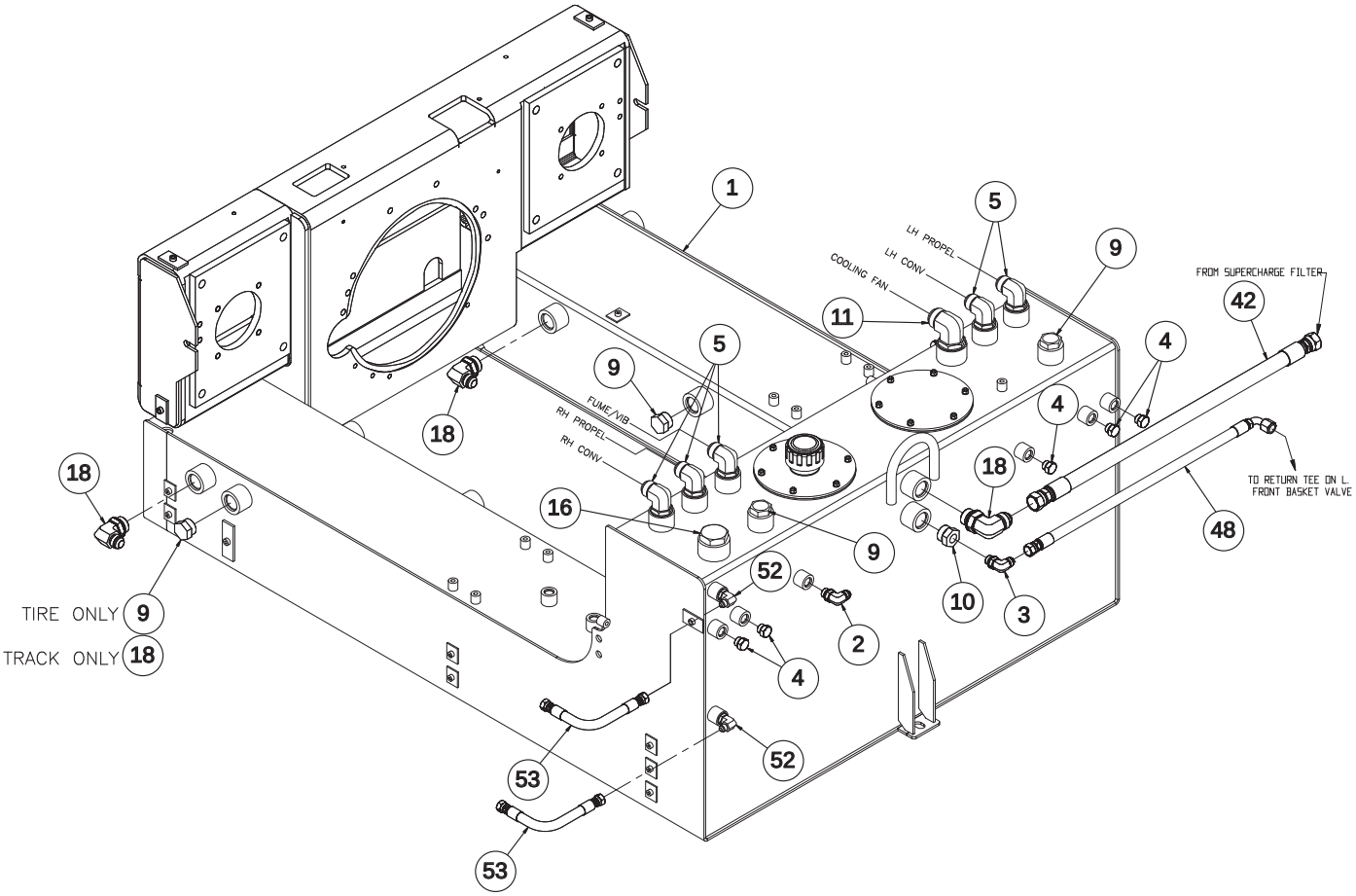

TEREX
CEDARAPIDS

## Hydraulic Reservoir Sub-Assembly

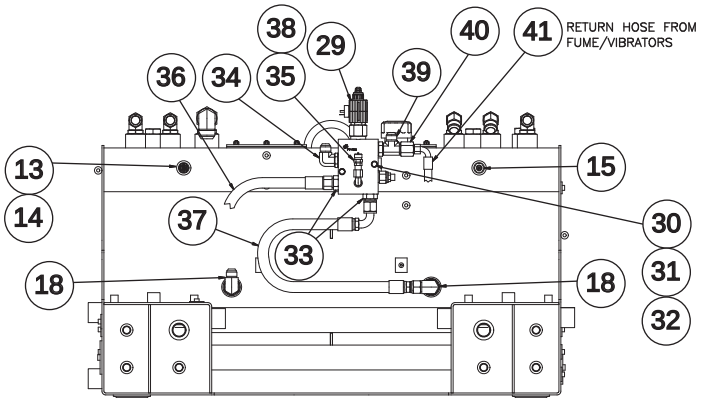


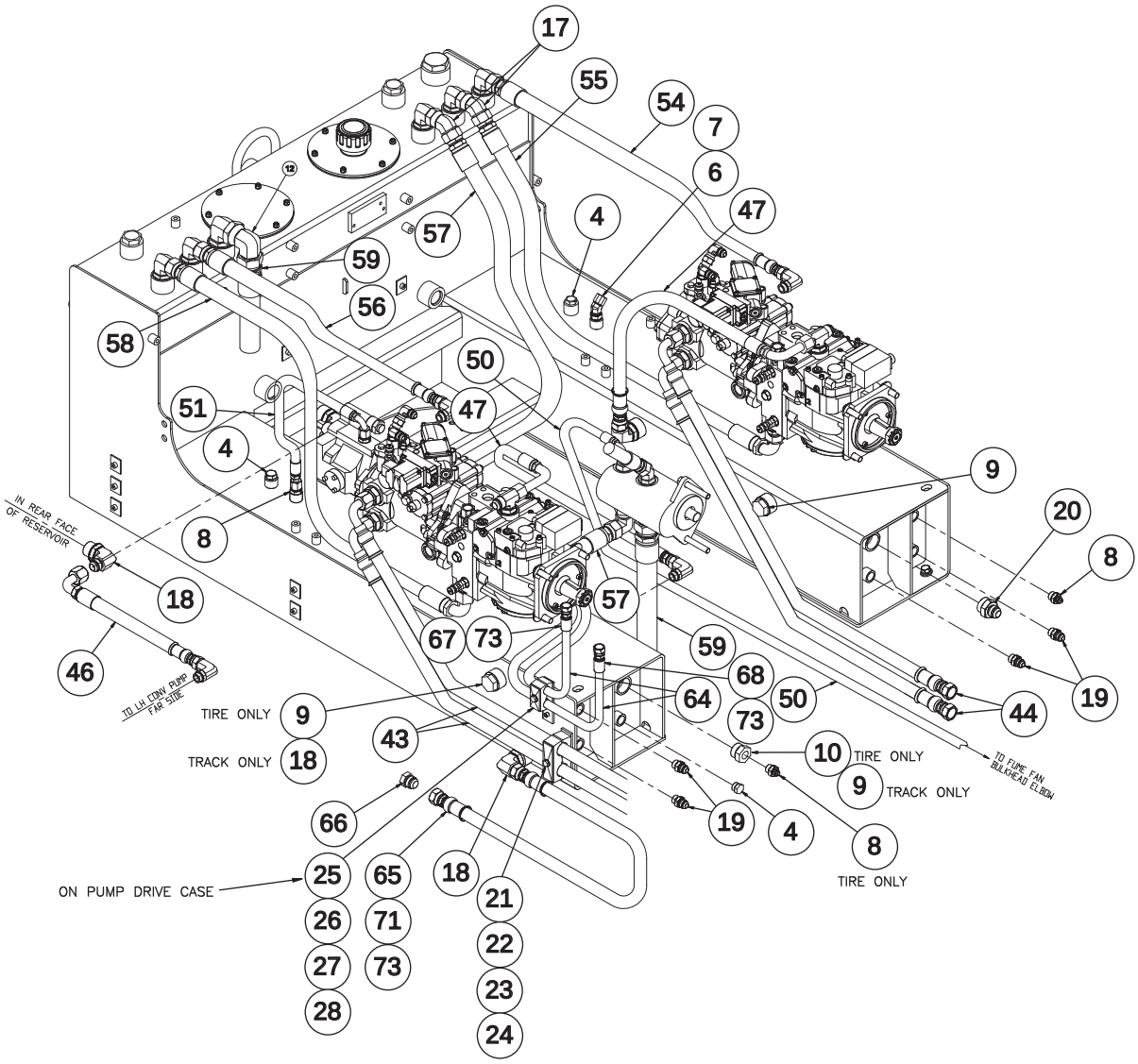

TEREX
CEDARAPIDS

## Hydraulic Reservoir Sub-Assembly

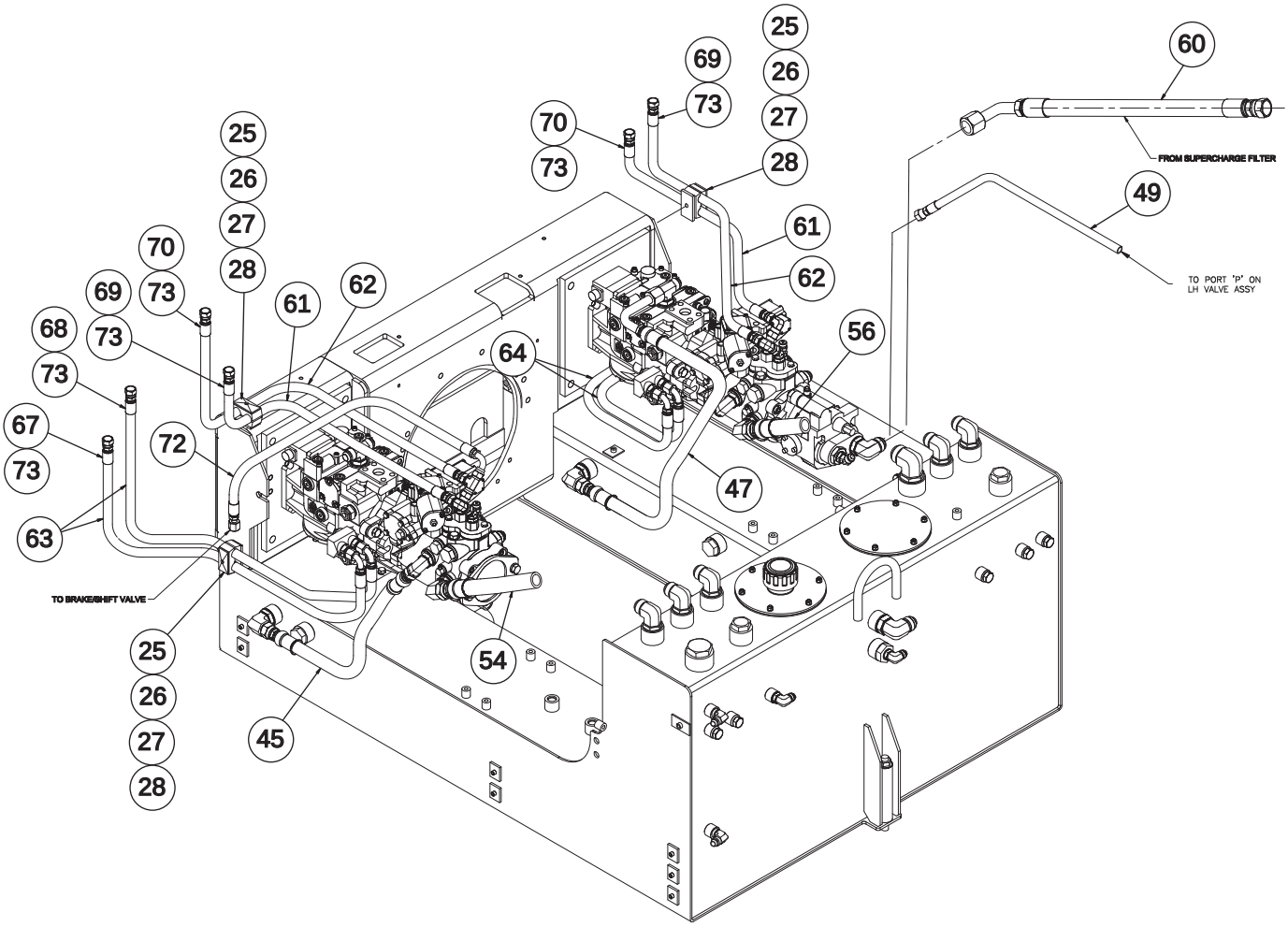

TEREX
CEDARAPIDS

## Hydraulic Reservoir Sub-Assembly

Part No. 0970865029

| Ref # | Part Number | REV | Part Name | Description | Qty |
|---|---|---|---|---|---|
| 1 | 0970466391 | B | RESERVOIR | HYDRAULIC | 1 |
| 2 | 07430276 | | ELBOW | #8MSAE X #6MJIC 90 | 1 |
| 3 | 07430278 | | ELBOW | #8SAEM X #8JICM 90D | 1 |
| 4 | 07430382 | | PLUG | #8SAE | 8 |
| 5 | 07430285 | | ELBOW | #16SAE #16JIC | 5 |
| 6 | 07430314 | | ELBOW | 3/4"SAE 1/2"JIC | 1 |
| 7 | 07430229 | | CAP | 1/2" | 1 |
| 8 | 07430253 | | CONNECTOR | 3/4"SAE 3/8"JIC | 3 |
| 9 | 07430434 | | PLUG | #16 | 7 |
| 10 | 4572077528 | - | REDUCER | 1"SAE TO 1/2"SAE | 2 |
| 11 | 07430286 | | ELBOW | 1-5/8"SAE 1-1/4"JIC | 1 |
| 12 | 07430465 | | ELBOW | 1-1/4" SWIVEL | 1 |
| 13 | 4525100709 | - | ADAPTER | 1/2" MNPT X 14MM | 1 |
| 14 | 4586500322 | - | SENSOR | TEMP W/O-RING | 1 |
| 15 | 4586500318 | - | SENDER | TEMPERATURE | 1 |
| 16 | 07430464 | - | PLUG | #24 | 1 |
| 17 | 07430429 | | ELBOW | 1" SWIVEL | 2 |
| 18 | 07430378 | | ELBOW | 1-5/16" SAE 3/4"JIC | 9 |
| 19 | 07430255 | | CONNECTOR | #8MSAE X #8MJIC | 4 |
| 20 | 07430264 | | CONNECTOR | 1-5/16"SAE 3/4" | 1 |
| 21 | 4508052938 | - | CLAMP | HALF 1.05"ID TWIN | 2 |
| 22 | 4508052932 | - | PLATE | COVER | 1 |
| 23 | 07383027 | | CAPSCREW | 5/16"NC X 2-1/4 | 1 |
| 24 | 07014002 | | WASHER | 5/16" LOCK | 1 |
| 25 | 4508052925 | - | CLAMP HALF | FOR 3/4" TUBE | 8 |
| 26 | 4508052927 | - | PLATE | COVER FOR CLAMP | 4 |
| 27 | 07383026 | | CAPSCREW | 5/16" NC X 2" | 4 |
| 28 | 07014002 | | WASHER | 5/16" LOCK | 4 |
| 29 | 4525200748 | B | VALVE | PROPORTIONAL FLOW | 1 |
| 30 | 07383028 | | CAPSCREW | 5/16"NC X 2-1/2 | 2 |
| 31 | 07014002 | | WASHER | 5/16" LOCK | 2 |
| 32 | 07014017 | | WASHER | 5/16" | 2 |
| 33 | 07430263 | | CONNECTOR | 1-1/16"SE 3/4"J | 2 |
| 34 | 07430282 | | ELBOW | #12SAEM-#12JICM 90D | 1 |
| 35 | 07430417 | | ELBOW | 7/16"SAE 3/8"JIC | 1 |
| 36 | 0766304533 | - | HOSE ASSY | | 1 |
| 37 | 0765302635 | A | HOSE ASSY | 3/4" ID X 26" | 1 |
| 38 | 4508052718 | - | FITTING | TEST 3/8"MALE JIC | 1 |
| 39 | 07430294 | | TEE | 3/4" | 1 |
| 40 | 07430330 | | REDUCER | 3/4" TO 1/2" | 1 |
| 41 | 0765208635 | A | HOSE ASSY | 1/2" ID X 86" | 1 |
| 42 | 076530453301 | A | HOSE ASSY | | 1 |
| 43 | 0767304435 | - | HOSE ASSY | 3/4" ID X 44" | 2 |
| 44 | 0767305635 | - | HOSE ASSY | 3/4" ID X 56" | 2 |
| 45 | 0765302033 | A | HOSE ASSY | CONVEYOR CASE | 1 |

CONTINUED

TEREX
CEDARAPIDS

## Hydraulic Reservoir Sub-Assembly

Part No. 0970865029

| Ref # | Part Number | REV | Part Name | Description | Qty |
|---|---|---|---|---|---|
| 46 | 0765302635 | A | HOSE ASSY | 3/4" ID X 26" | 1 |
| 47 | 0765303038 | A | HOSE ASSY | 3/4" ID X 30" | 2 |
| 48 | 0765203335 | A | HOSE ASSY | 1/2" X 33" | 1 |
| 49 | 0766204233 | - | HOSE ASSY | | 1 |
| 50 | 0765206235 | A | HOSE ASSY | 1/2" ID X 62" | 1 |
| 51 | 0765102135 | - | HOSE ASSY | 3/8" ID X 21" | 1 |
| 52 | 07430276 | | ELBOW | #8MSAE X #6MJIC 90 | 2 |
| 53 | 076500093301 | A | HOSE ASSY | | 2 |
| 54 | 0763403133 | - | HOSE ASSY | | 1 |
| 55 | 0763404335 | - | HOSE ASSY | 1" ID X 43" | 1 |
| 56 | 0763402833 | | HOSE ASSY | | 1 |
| 57 | 0763405433 | A | HOSE ASSY | 1" ID X 54" | 1 |
| 58 | 0763404335 | - | HOSE ASSY | 1" ID X 43" | 1 |
| 59 | 0763505035 | - | HOSE ASSY | 50" | 1 |
| 60 | 0763405035 | - | HOSE ASSY | 1" ID X 50 | 1 |
| 61 | 0765204135 | A | HOSE ASSY | RH TRACTION | 2 |
| 62 | 0765204733 | A | HOSE ASSY | 1/2" ID X 47" | 2 |
| 63 | 0765205235 | A | HOSE ASSY | 1/2" ID X 52" | 2 |
| 64 | 0765205935 | A | HOSE ASSY | | 2 |
| 65 | 0763305233 | - | HOSE ASSY | 3/4" ID X 52" | 1 |
| 66 | 07430242 | | PLUG | 3/4" | 1 |
| 67 | 07470154 | | NAMEPLATE | TRAC CHG TO | 2 |
| 68 | 07470155 | | NAMEPLATE | TRAC CHG FROM | 2 |
| 69 | 07470156 | | NAMEPLATE | CONV CHG TO | 2 |
| 70 | 07470157 | | NAMEPLATE | CONV CHG FROM | 2 |
| 71 | 07470158 | | NAMEPLATE | RESERVOIR DRAIN | 1 |
| 72 | 0765203635 | A | HOSE ASSY | 1/2" ID X 36" | 1 |
| 73 | 4632000120 | - | CABLE TIE | 3/8"-1-3/4" | 9 |

TEREX
CEDARAPIDS

## Hydraulic Reservoir Assembly

Part No. 0970466391

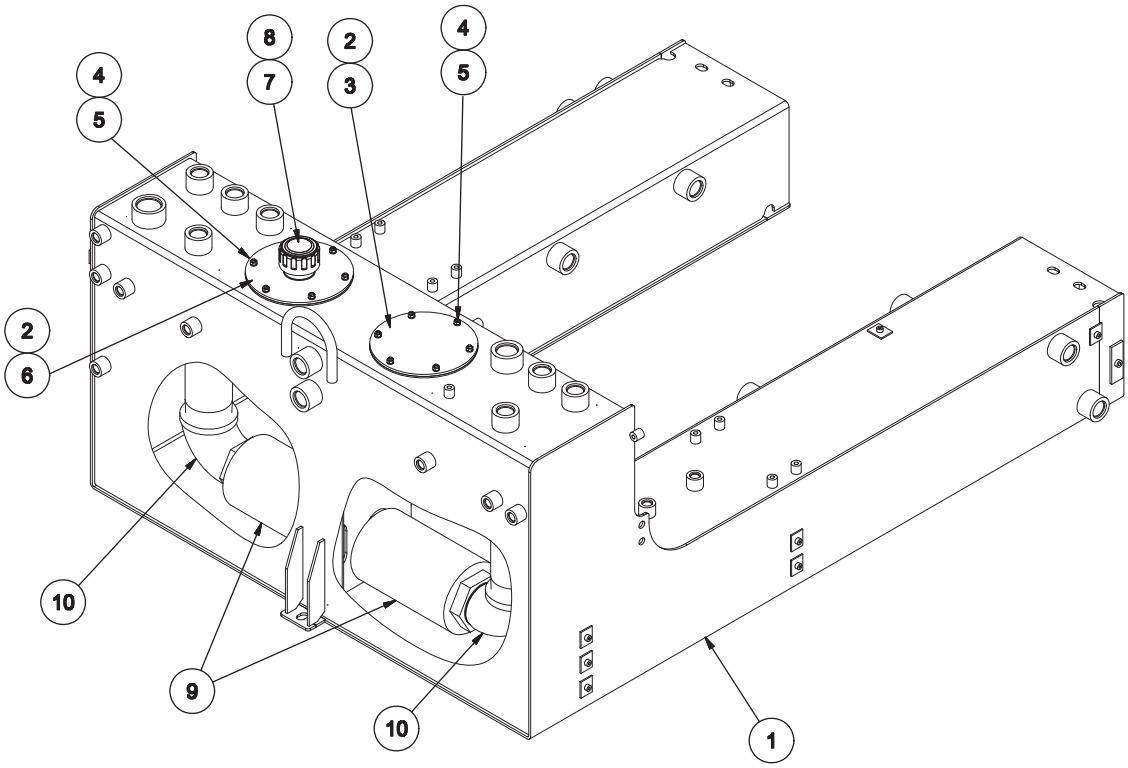


| Ref # | Part Number | REV | Part Name | Description | Qty |
|---|---|---|---|---|---|
| 1 | 0970466392 | | RESERVOIR | HYDRAULIC | 1 |
| 2 | 440037509 | | GASKET | NEOPRENE | 2 |
| 3 | 097046639101 | | COVER | 8" | 1 |
| 4 | 07014001 | | WASHER | 1/4" LOCK | 12 |
| 5 | 07012023 | | HEX NUT | 1/4" NC | 12 |
| 6 | 097046639102 | | COVER | WELDMENT | 1 |
| 7 | 097046639103 | | CAP | FILLER BREATHER W/CHAIN | 1 |
| 8 | 097046639104 | | STRAINER | FILL | 1 |
| 9 | 4508051069 | | STRAINER | | 2 |
| 10 | 07061011 | | ELBOW | 3" 90 DEGREE STREET | 2 |

Return to Table of Contents Page

TEREX
CEDARAPIDS

Table of Contents

# Power Mounting - 05234GBC


| Ref No. | Description | Page No. |
|---|---|---|
| 1 | Power Mounting Illustration - Part 1 | 2 |
| 2 | Power Mounting Illustration - Part 2 | 3 |
| 3 | Power Mounting Parts List | 4 |
| 4 | Engine Sub-Assembly Illustration - Part 1 | 5 |
| 5 | Engine Sub-Assembly Illustration - Part 2 | 6 |
| 6 | Engine Sub-Assembly Parts List | 7 |

Return to Table of Contents Page

TEREX
CEDARAPIDS

## Power Mounting Assembly

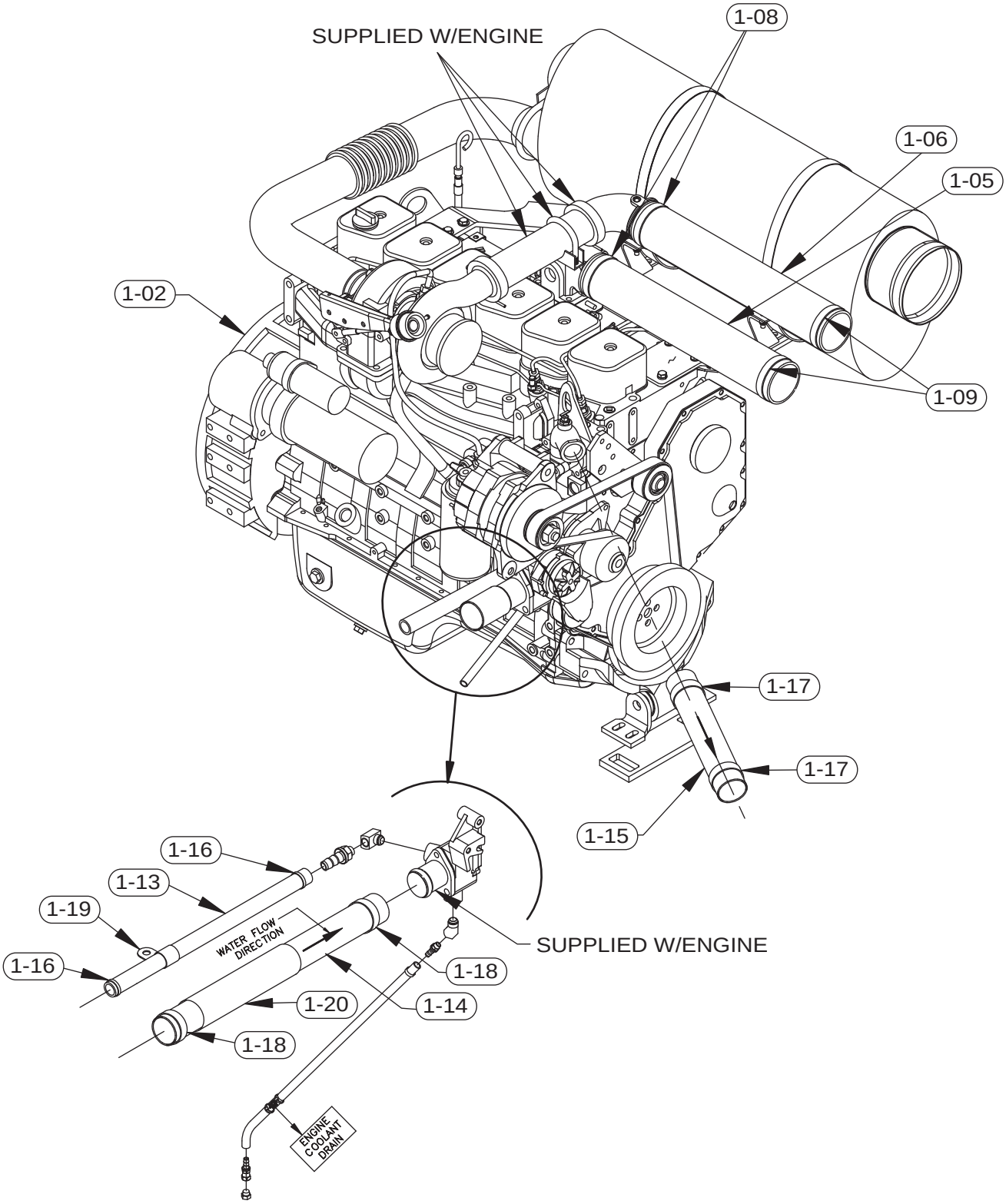

Return to Table of Contents Page

TEREX
CEDARAPIDS

## Power Mounting Assembly

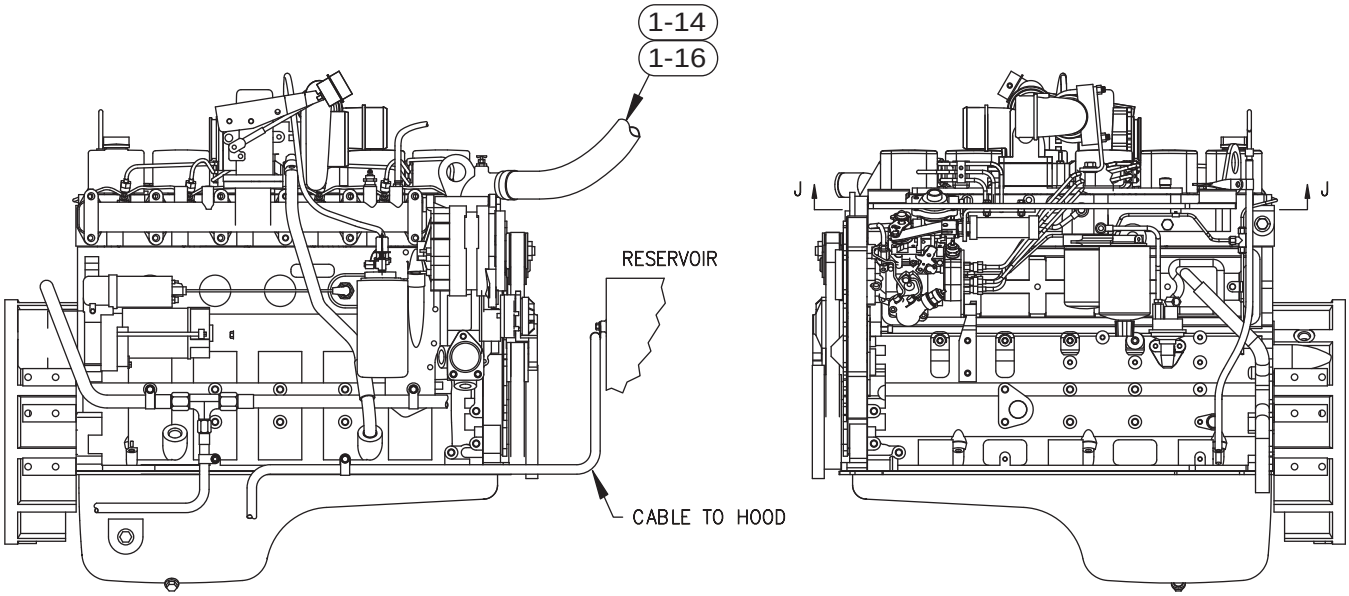


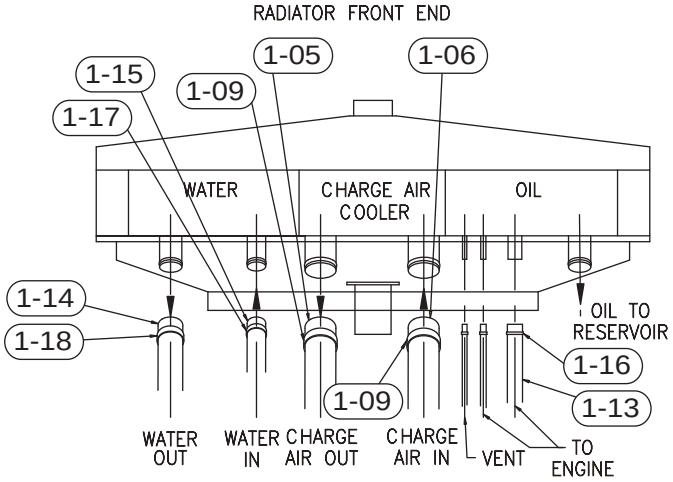


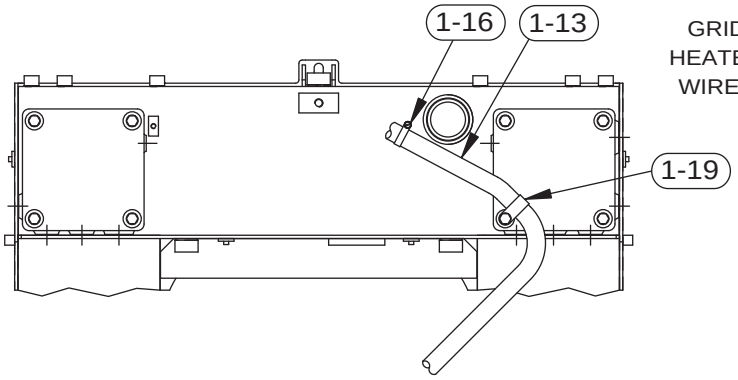


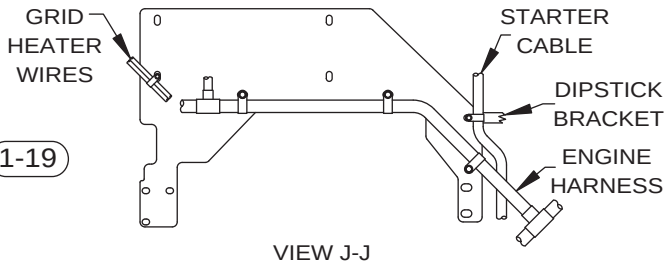


VIEW J-J
UNDERSIDE OF MUFFLER PLATE

Return to Table of Contents Page

TEREX
CEDARAPIDS

## Power Mounting Assembly

Parts List No. 05234GBC

| Ref # | Part Number | Part Name | Description | Qty |
|---|---|---|---|---|
| 1-01 | 0970432463 | ASSY | 400/500 TIER 3 POWER | REF |
| 1-02 | 0970830043 | SUB-ASY | 500 PWER MTG | 1 |
| 1-06 | 0970432386 | HOSE | 3" HOT AIR BLOWER 50 | 1 |
| 1-07 | 0970432385 | HOSE | 3" HOT AIR BLOWER 54 | 1 |
| 1-08 | 4519100716 | CLAMP | 3.5" T-BOLT | 2 |
| 1-09 | 4571000217 | CLAMP | MUFFLER CLAMP | 2 |
| 1-13 | 0970432310 | HOSE | COOLANT FILL | 1 |
| 1-14 | 0970432294 | HOSE | 2.13"ID | 1 |
| 1-15 | 0970432293 | HOSE | 1.75"ID | 1 |
| 1-16 | 4519100789 | CLAMP | 1.31" T-BOLT | 2 |
| 1-17 | 4519100775 | CLAMP | T-BOLT 2.25" | 2 |
| 1-18 | 4519100767 | CLAMP | T-BOLT 2.25" MIN DI | 2 |
| 1-19 | 07509011 | CLAMP | 1-3/8" | 1 |
| 1-20 | 4519150805 | SLEEVE | 3" HOSE PROTECTOR | 1 |

Return to Table of Contents Page

TEREX
CEDARAPIDS

## Engine Sub-Assembly

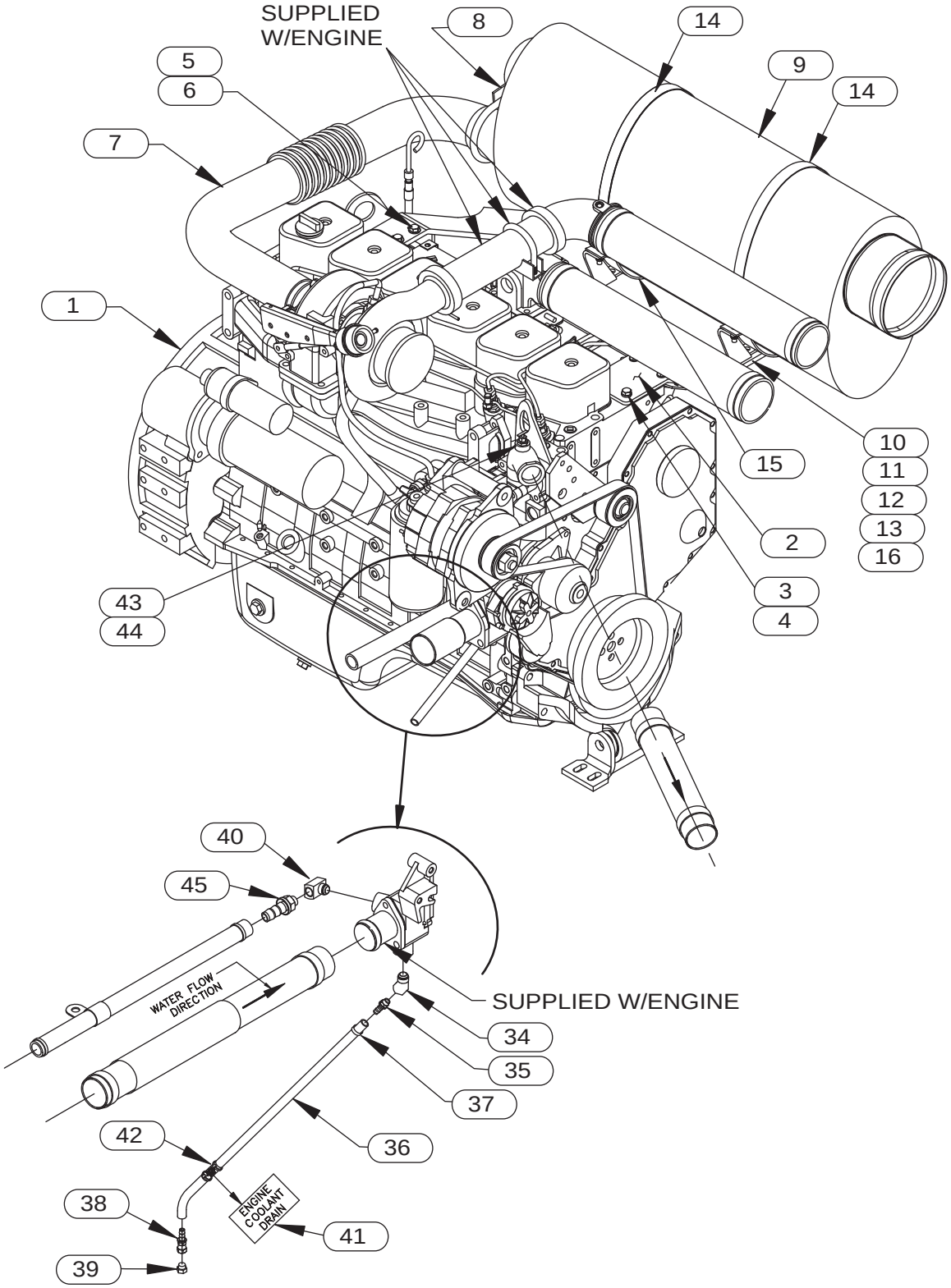

Return to Table of Contents Page

TEREX
CEDARAPIDS

## Engine Sub-Assembly

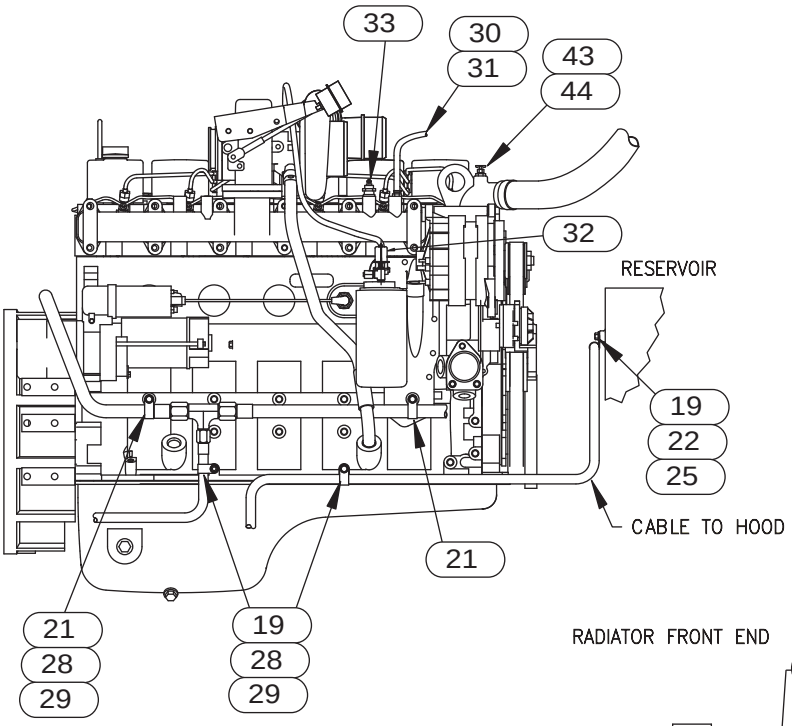


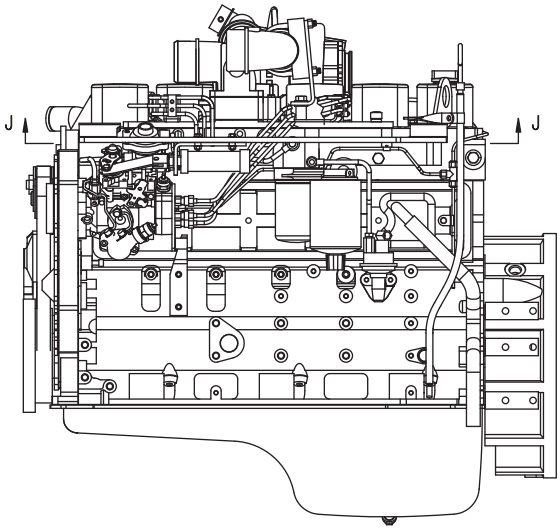


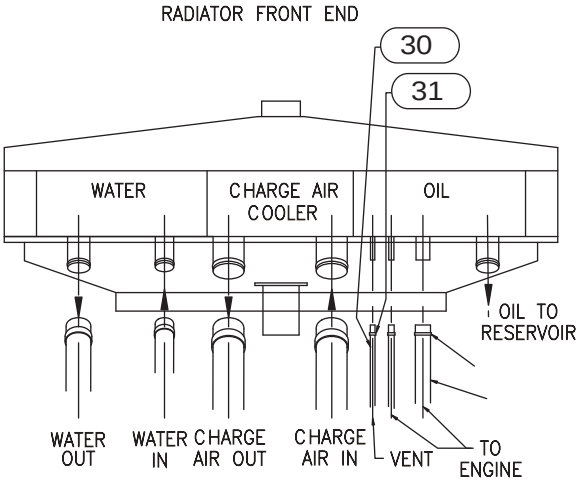


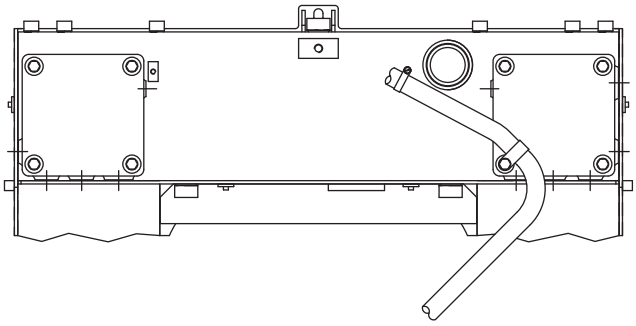

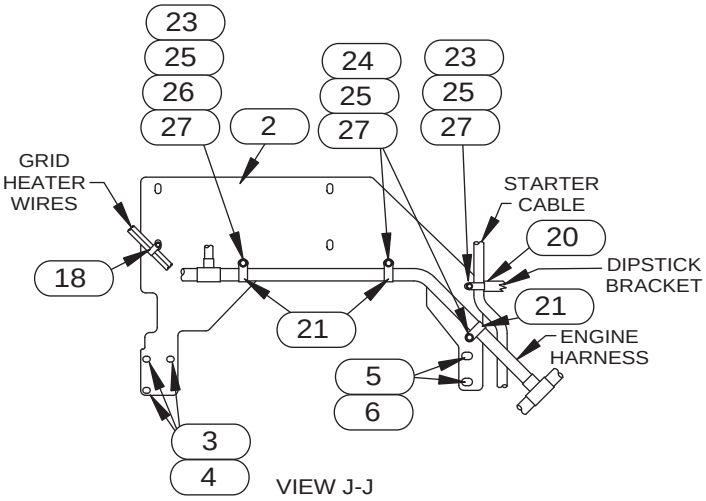


VIEW J-J
UNDERSIDE OF MUFFLER PLATE

Return to Table of Contents Page

TEREX
CEDARAPIDS

## Engine Sub-Assembly

Parts List No. 05234GBC

| Ref # | Part Number | Part Name | Description | Qty |
|---|---|---|---|---|
| 1 | 4593000171 | ENGINE | CUMMINS QSB6.7 | 1 |
| 2 | 0970432452 | PLATE | MUFFLER MOUNT | 1 |
| 3 | 4589030002 | CAPSCREW | M10 X 30 HEX HD | 3 |
| 4 | 4589030110 | LOCKWASHER | 10MM STYLE 79 | 3 |
| 5 | 4589030111 | WASHER | M12 X 18 X 2.5 | 2 |
| 6 | 4589030054 | CAPSCREW | SOC. HD. 12MM X | 2 |
| 7 | 0970432432 | TUBE | EXHAUST | 1 |
| 8 | 4571000203 | CLAMP | 3" SADDLE | 1 |
| 9 | 0970430631 | MUFFLER | FUME RECOVER | 1 |
| 10 | 0970432173 | BRACKET | MUFFLER MOUNT6BTA | 2 |
| 11 | 07014018 | WASHER | 3/8" | 7 |
| 12 | 07072053 | CARR BOLT | 3/8"NC X1-1/4" | 4 |
| 13 | 07012025 | HEX NUT | 3/8" NC | 4 |
| 14 | 4618500126 | CLAMP | STRAP | 2 |
| 15 | 4571000214 | CLAMP | MUFFLER MOUNTING | 2 |
| 16 | 07014003 | WASHER | 3/8" LOCK | 4 |
| 18 | 07509004 | HOSE CLAMP | 5/8" | 1 |
| 19 | 07509005 | CLAMP | 11/16" | 3 |
| 20 | 07509006 | CLAMP | 3/4" | 1 |
| 21 | 07509008 | HOSE CLAMP | 15/16" | 5 |
| 22 | 07383036 | CAPSCREW | 3/8" NC X 3/4" | 1 |
| 23 | 07383039 | CAPSCREW | 3/8"NC X 1-1/4" | 2 |
| 24 | 07072053 | CARR BOLT | 3/8"NC X1-1/4" | 2 |
| 25 | 07014003 | WASHER | 3/8" LOCK | 5 |
| 26 | 07014018 | WASHER | 3/8" | 1 |
| 27 | 07012025 | HEX NUT | 3/8" NC | 4 |
| 28 | 4589030042 | CAPSCREW | M8 X 20 X 1.25 | 3 |
| 29 | 4589030105 | WASHER | M8 STYLE 127B LOC | 3 |
| 30 | 5003000202 | HOSE | 3/8" ID | 4.3' |
| 31 | 4519100428 | CLAMP | 25/32" HOSE | 2 |
| 32 | 4586500217 | SENSOR | OIL PRESSURE | 1 |
| 33 | 4586500319 | SENDER | TEMPERATURE | 1 |
| 34 | 4519100779 | ELBOW | 45 DEG. STREET | 1 |
| 35 | 4519151063 | FITTING | 1/2"BARB X1/2"NPT | 1 |
| 36 | 5003000203 | HOSE | 1/2" ID | 7.5' |
| 37 | 4519100434 | CLAMP | 9/16"-1-1/16" | 1 |
| 38 | 07431009 | FITTING | 1/2" HOSE SWIVEL | 1 |
| 39 | 07430240 | PLUG | #8 | 1 |
| 40 | 4519100780 | ELBOW | 3/4" STREET | 1 |
| 41 | 07470169 | NAMEPLATE | COOLANT DRAIN | 1 |
| 42 | 4632000120 | CABLE TIE | 3/8"-1-3/4" | 1 |
| 43 | 4572076901 | REDUCER | 1/4"P TO 1/8"P | 1 |
| 44 | 4525000708 | VAVLE | 1/8" PET COCK | 1 |
| 45 | 4519151065 | FITTING | 1" HOSE BARB X3/4 | 1 |

Return to Table of Contents Page

TEREX
CEDARAPIDS

Table of Contents

## Pump Drive Components - 05032DVC


| Ref No. | Description | Page No. |
|---|---|---|
| 1 | Pump Drive Illustration - Part 1 | 2 |
| 2 | Pump Drive Illustration - Part 2 | 3 |
| 3 | Pump Drive Parts List - Part 1 | 4 |
| 4 | Pump Drive Parts List - Part 2 | 5 |
| 5 | Auxiliary Pump - Part No: 45080-002-10 | 6 |
| 6 | Traction Pump - Part No: 45080-002-42 | 7 |
| 7 | Conveyor Pump - Part No: 45080-002-62 | 8 |
| 8 | Conveyor Pump - Part No: 45080-002-43 | 9 |

Return to Table of Contents Page

TEREX
CEDARAPIDS

## Pump Drive

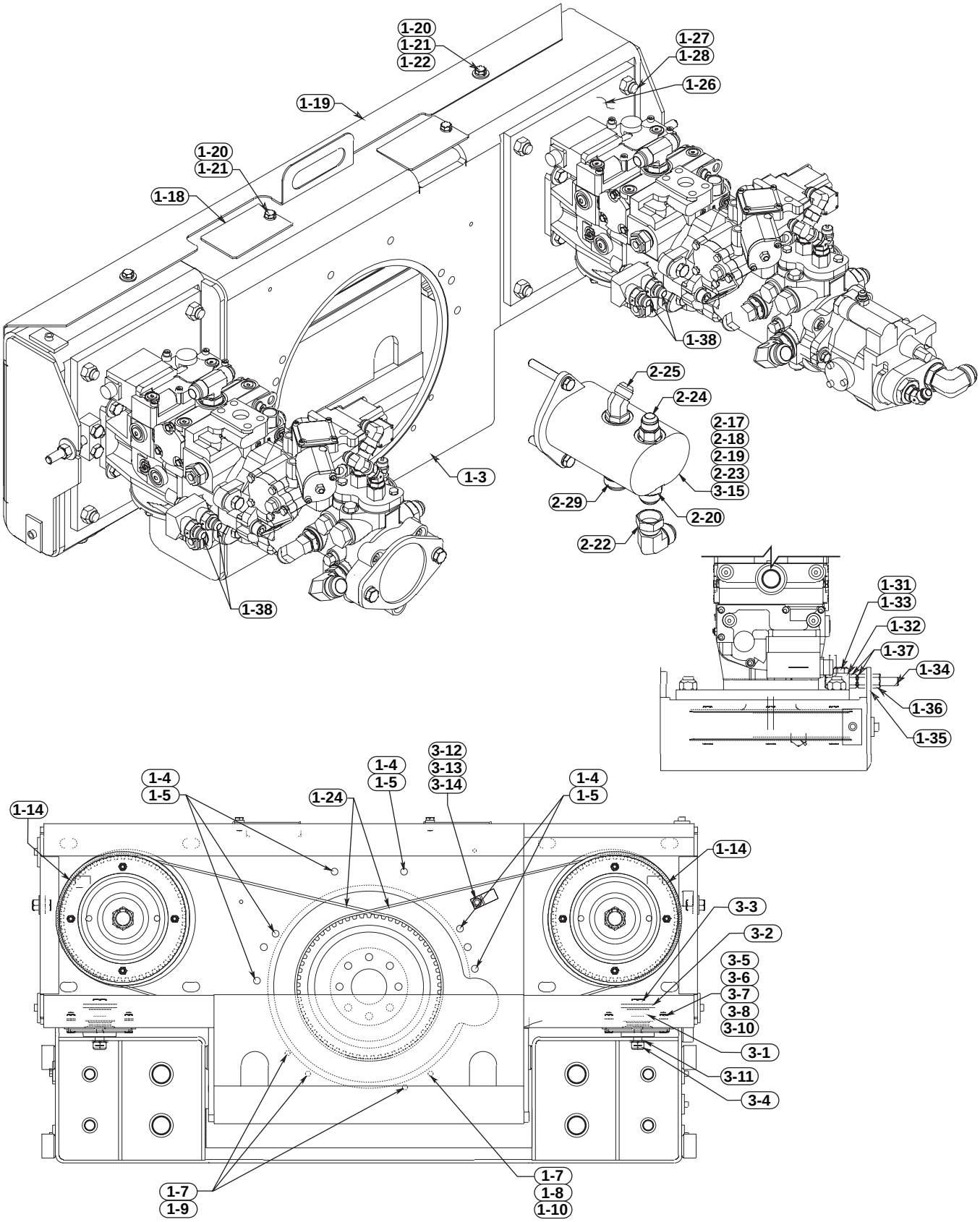

Return to Table of Contents Page

TEREX CEDARAPIDS

## Pump Drive

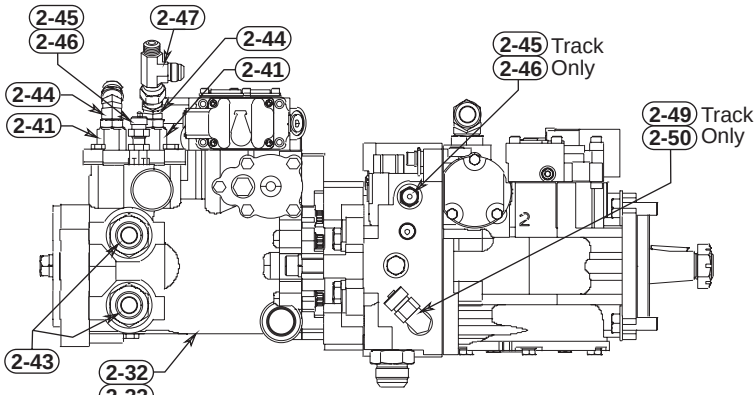


Right Bank - Left Side

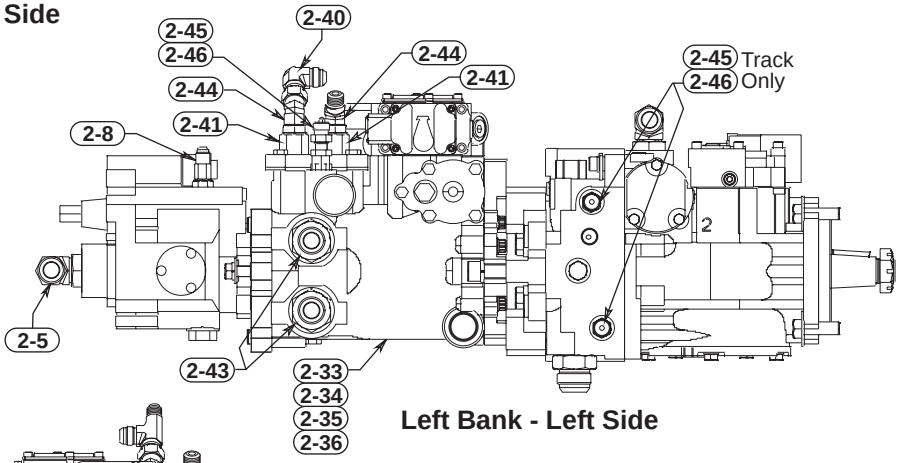


Left Bank - Left Side

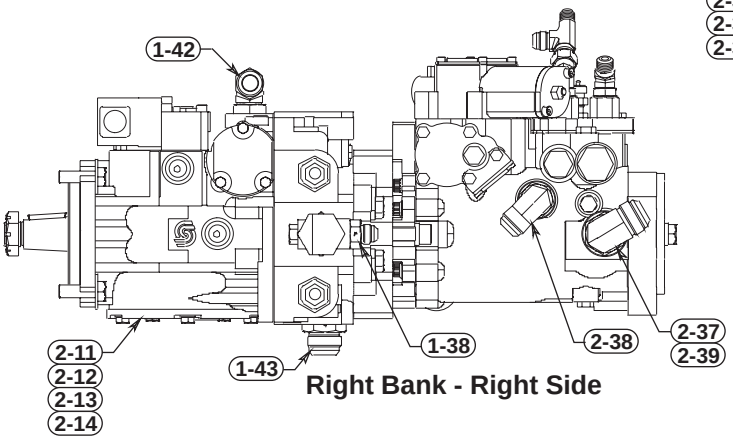


Right Bank - Right Side

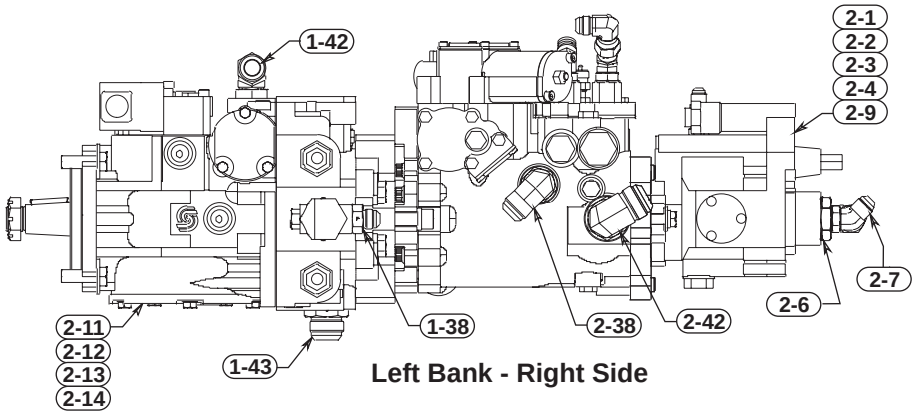


Left Bank - Right Side

Return to Table of Contents Page

TEREX
CEDARAPIDS

## Pump Drive

Parts List No. 5032DVC

| Ref. No. | Part Number | Description | Quantity |
|---|---|---|---|
| 1-3 | 09704-155-72 | Housing, Pump Drive | 1 |
| 1-4 | 07383-054 | Capscrew, 7/16" NC X 1-1/4" | 6 |
| 1-5 | 07014-004 | Washer, 7/16" Lock | 6 |
| 1-7 | 07014-002 | Washer, 5/16" Lock | 4 |
| 1-8 | 07012-024 | Hex Nut, 5/16' NC | 1 |
| 1-9 | 45890-303-05 | Capscrew, SH M8 x 35 | 3 |
| 1-10 | 07383-029 | Capscrew, 5/16" NC X 2-3/4" | 1 |
| 1-14 | 09704-315-06 | Sprocket, Pump | 2 |
| 1-18 | 09704-314-18 | Cover, Inspection | 2 |
| 1-19 | 09704-315-20 | Cover, Drive Case | 1 |
| 1-20 | 07383-036 | Capscrew, 3/8" NC x 3/4" | 4 |
| 1-21 | 07014-003 | Lockwasher, 3/8" | 4 |
| 1-22 | 07014-018 | Washer, 3/8" | 2 |
| 1-24 | 45825-004-04 | Belt, Poly-Chain - 125 Teeth | 2 |
| 1-26 | 09704-315-58 | Plate, Pump Mount | 2 |
| 1-27 | 07072-197 | Carriage Bolt, 5/8" NC x 1-3/4" | 8 |
| 1-28 | 45890-102-33 | Hex Nut, 5/8" Lock | 8 |
| 1-31 | 07014-005 | Washer, 1/2" Lock | 4 |
| 1-32 | 09704-312-41 | Block, Adjusting Bolt | 2 |
| 1-33 | 07383-071 | Capscrew, 1/2" NC x 1-3/4" | 4 |
| 1-34 | 07285-009 | Adjusting Bolt, 1/2" NC x 4" | 2 |
| 1-35 | 07465-001 | Washer, 1/2" | 4 |
| 1-36 | 07012-027 | Hex Nut, 1/2" NC | 2 |
| 1-37 | 07017-027 | Hex Nut, 1/2" NC Jam | 4 |
| 1-38 | 07430-256 | Connector, 7/8" x 1/2" - with O-Ring | 4 |
| | 45259-508-71 | O-Ring, 7/8" (For above fitting) | As Req |
| 1-40 | 07509-012 | Clamp, Hose 1-1/2" | 1 |
| 1-42 | 07430-305 | Tee, #12 Branch | 2 |
| 1-43 | 07430-267 | Connector, 1-5/16" x 1" - with O-Ring | 2 |
| | 45259-508-17 | O-Ring, 1-5/16" (For above fitting) | As Req |
| 1-46 | 09704-376-82 | Harness, Pump 400/500 (Not Shown) | 1 |
| 1-48 | 09704-376-74 | Harness, QSB Engine (Not Shown) | 1 |
| 2-1 | 45240-125-62 | O-Ring, 3.443" O.D. | 1 |
| 2-2 | 45080-002-10 | Pump, Auxiliary - See Form #21328, Following Pages | 1 |
| 2-3 | 07383-039 | Capscrew, 3/8" NC x 1-1/4" | 2 |
| 2-4 | 07014-003 | Lockwasher, 3/8" | 2 |
| 2-5 | 07430-285 | Elbow, 90° 1-5/16" x 1" - with O-Ring | 1 |
| | 45259-508-17 | O-Ring, 1-5/16" (For above fitting) | As Req |
| 2-6 | 45720-775-28 | Reducer, 1" to 1/2" SAE | 1 |
| 2-7 | 07430-314 | Elbow, 3/4" SAE To 1/2" JIC | 1 |
| | 45259-508-14 | O-Ring, 3/4" (For above fitting) | As Req |
| 2-8 | 07430-252 | Connector, #6 O-Ring X 3/8"JIC | 1 |
| 2-9 | 07465-014 | Washer, 3/8" Flat Hardened | 2 |

_ Continued Next Page -

Return to Table of Contents Page

TEREX
CEDARAPIDS

**Pump Drive - Continued...**
Parts List No. 5032DVC

| Ref. No. | Part Number | Description | Quantity |
|---|---|---|---|
| 2-11 | 45080-002-42 | Pump, Traction - See Form #19441, Following Pages | 2 |
| 2-12 | 07383-070 | Capscrew, 1/2" NC x 1-1/2" | 8 |
| 2-13 | 07465-001 | Washer, 1/2" Flat Hardened | 8 |
| 2-14 | 07014-005 | Washer, 1/2" Lock | 8 |
| 2-17 | 45080-003-59 | Pump, Hydraulic - Fan/Vibrator | 1 |
| 2-18 | 45890-303-64 | Capscrew, M12 x 1.75 x 80 | 2 |
| 2-19 | 45890-301-11 | Lockwasher, M12 x 18 x 2.5 | 2 |
| 2-20 | 07430-267 | Connector, #16 SAE x #16 JIC | 1 |
| 2-22 | 07430-406 | Elbow, 1" Swivel | 1 |
| 2-23 | 45240-125-65 | Gasket, O-Ring | 1 |
| 2-24 | 07430-257 | Connector, 1-1/16" x 1/2" | 1 |
| 2-25 | 07430-318 | Elbow, #12 SAE X #12 JIC | 1 |
| 2-29 | 07430-269 | Connector, 1-5/16" x 1-1/4" | 1 |
| 2-32 | 45080-002-62 | Pump, Conveyor - See Form #22238, Following Pages | 1 |
| 2-33 | 45240-125-65 | O-Ring 3.739" ID X .070" WA | 2 |
| 2-34 | 45080-002-43 | Pump, Conveyor - See Form #19533, Following Pages | 1 |
| 2-35 | 07025-023 | Capscrew, Sch 1/2 NC X 1-3/4 | 4 |
| 2-36 | 07014-005 | Lockwasher, 1/2" | 4 |
| 2-37 | 07430-267 | Connector, #16 SAE #16 JIC | 1 |
| 2-38 | 07430-282 | Elbow, #12 SAE #12 JIC | 2 |
| 2-39 | 07430-406 | Elbow, 1" Swivel | 1 |
| 2-40 | 07430-405 | Elbow, 1/2" Swivel | 1 |
| 2-41 | 45720-775-34 | Reducer, 5/8" SAE To 1/2" | 4 |
| 2-42 | 07430-285 | Elbow, #16 SAE #16 JIC | 1 |
| 2-43 | 07430-264 | Connector, 1-5/16" SAE 3/4" | 4 |
| 2-44 | 07430-314 | Elbow, 3/4" SAE 1/2" JIC | 4 |
| 2-45 | 45080-527-04 | Fitting, SAE #4 Port | 2 |
| 2-46 | 45720-775-54 | Reducer, SAE #6 To SAE #4 | 2 |
| 2-47 | 07430-345 | Tee, 1/2" Swivel Nut | 1 |
| 3-1 | 45905-017-07 | Mount, Engine | 2 |
| 3-2 | 08049A06 | Washer, 1/4" Thick | 6 |
| 3-3 | 07383-108 | Capscrew, 5/8" NC X 3-1/2" | 2 |
| 3-4 | 45890-102-29 | Locknut, 5/8" NC | 2 |
| 3-5 | 07383-039 | Capscrew, 3/8" NC X 1-1/4" | 8 |
| 3-6 | 07014-003 | Lockwasher, 3/8" | 8 |
| 3-7 | 07012-025 | Hex Nut, 3/8" NC | 4 |
| 3-8 | 07014-018 | Washer, 3/8" | 8 |
| 3-10 | 07438-009 | Washer, 3/8" SHPK LK | 4 |
| 3-11 | 07014-022 | Washer, 5/8" | 2 |
| 3-12 | 07509-009 | Clamp, Hose 1-1/8" | 1 |
| 3-13 | 07383-020 | Capscrew, 5/16" x 3/4" | 1 |
| 3-14 | 07014-013 | Lockwasher, 1-1/4" | 1 |
| 3-15 | 09704-154-22 | Gasket, SAE "B" 2 Bolt | 1 |

Return to Table of Contents Page

TEREX
CEDARAPIDS

## Auxiliary Pump

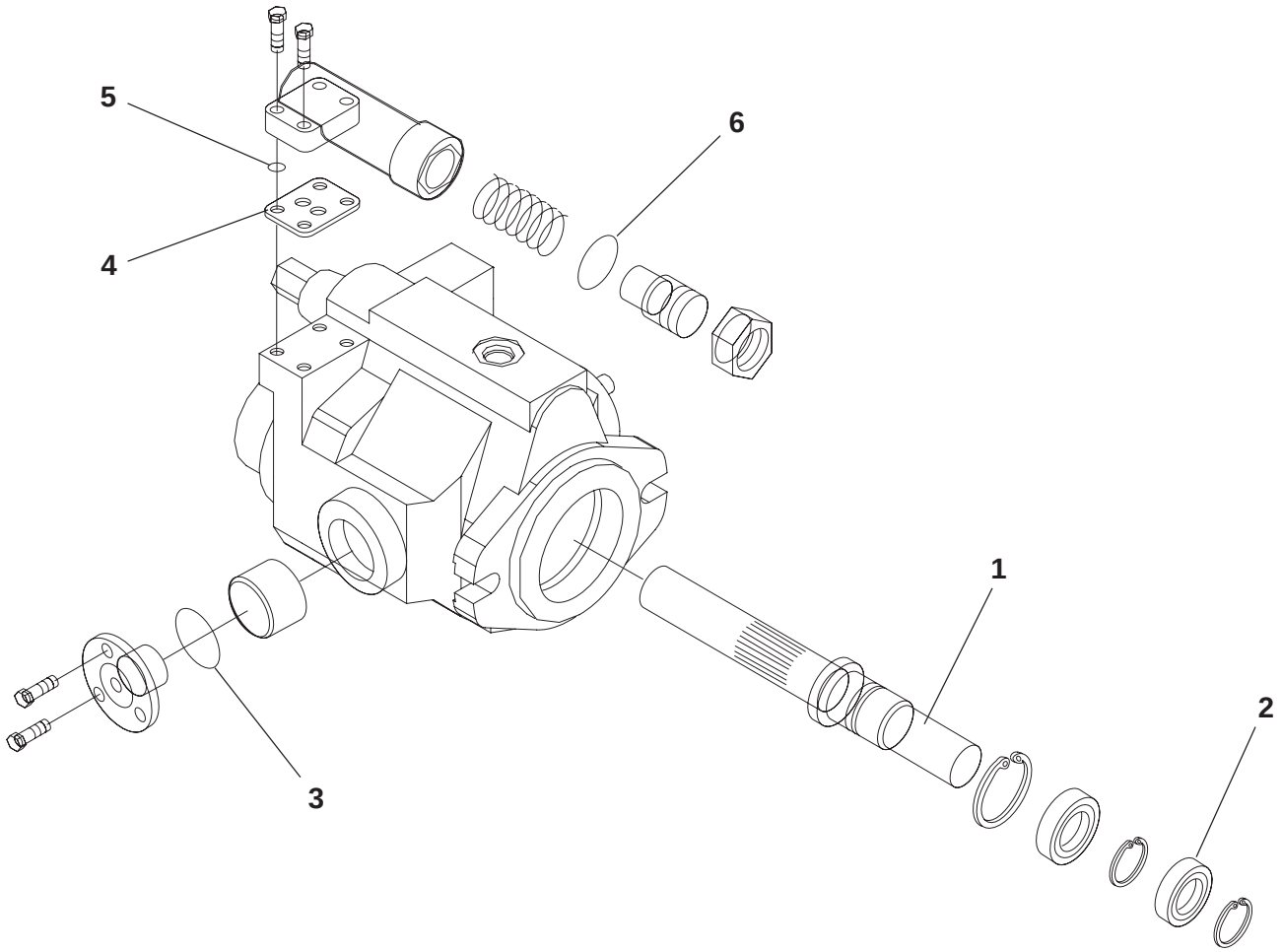


| Ref. No. | Part Number | Description | Quantity |
|---|---|---|---|
| | 45080-002-10 | Auxiliary Pump - Complete | |
| 1 | 45080-002-24-03 | Spline, 9-Tooth | 1 |
| 2 | 45080-002-10-03 | Seal, Shaft | 1 |
| 3 | Consult Factory | O-Ring | 2 |
| | Consult Factory | Control Kit - PC (3000 PSI) | |
| 4 | 45080-002-10-02 | Gasket | 1 |
| 5 | 45080-002-10-01 | O-Ring | 1 |
| 6 | Consult Factory | O-Ring | 1 |
| 7 | 45080-002-10-04 | Seal Kit - Complete | 1 |

Note: Only Replacement Parts Shown. For More Detailed Parts Replacement Information, Please Consult Factory.

Return to Table of Contents Page

TEREX
CEDARAPIDS

## Hydraulic Pump

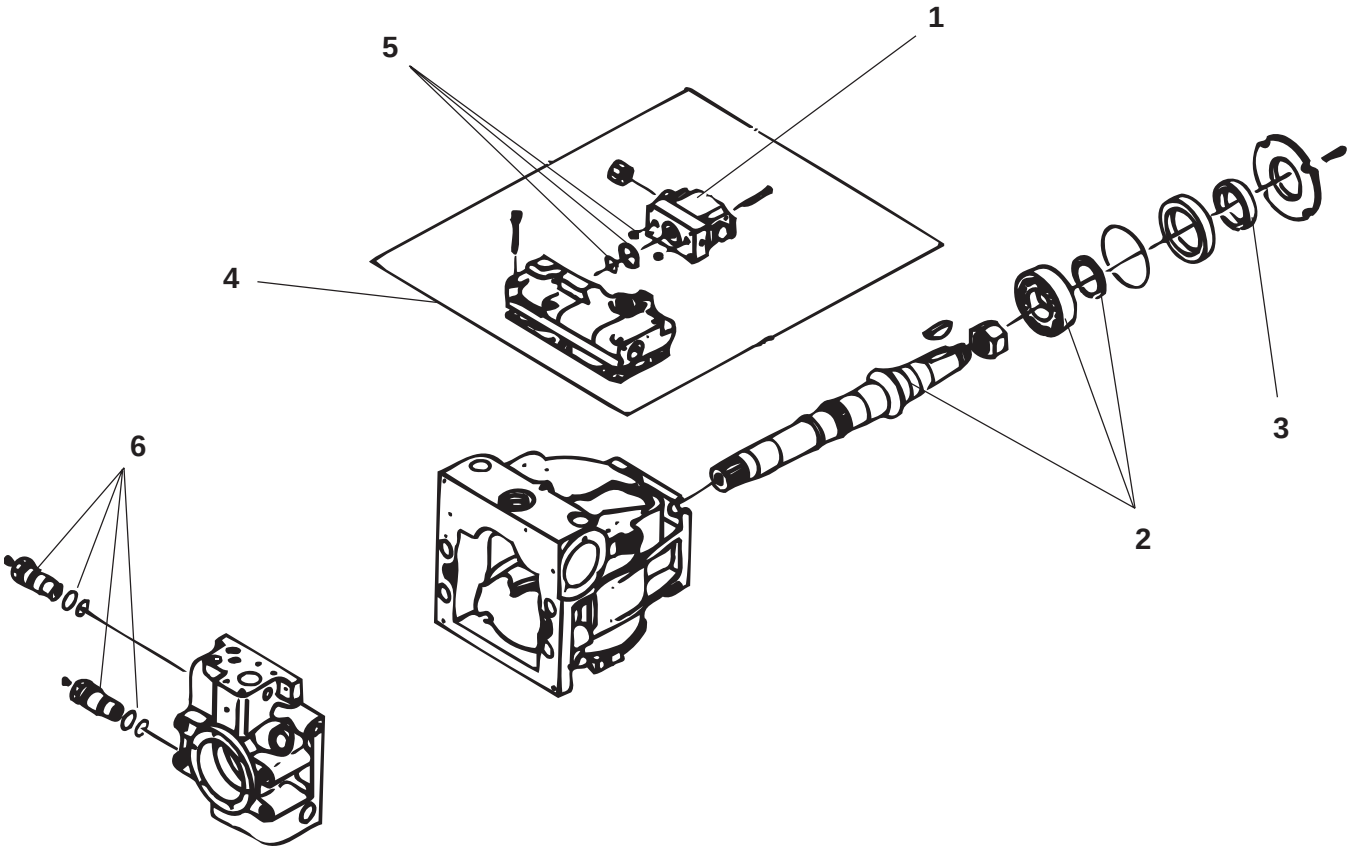


| Ref. No. | Part Number | Description | Quantity |
|---|---|---|---|
| | 45080-002-42 | Pump, Traction | 1 |
| 1 | 45080-002-34-02 | Pressure Control Pilot Valve ( EDC ) | 1 |
| 2 | 45080-002-34-03 | Shaft w/Bearing | 1 |
| 3 | 45080-002-34-04 | Shaft Seal | 1 |
| 4 | 45080-002-34-06 | EDC Control w/Gasket | 1 |
| 5 | 45080-002-34-07 | O-Ring Kit for Pilot Valve | 1 |
| 6 | 45080-002-34-08 | Multi Function Valve Cartridge | 1 |

Note: Only Replacement Parts Shown. For More Detailed Parts Replacement Information, Please Consult Factory.

Return to Table of Contents Page

TEREX
CEDARAPIDS

## Hydraulic Pump

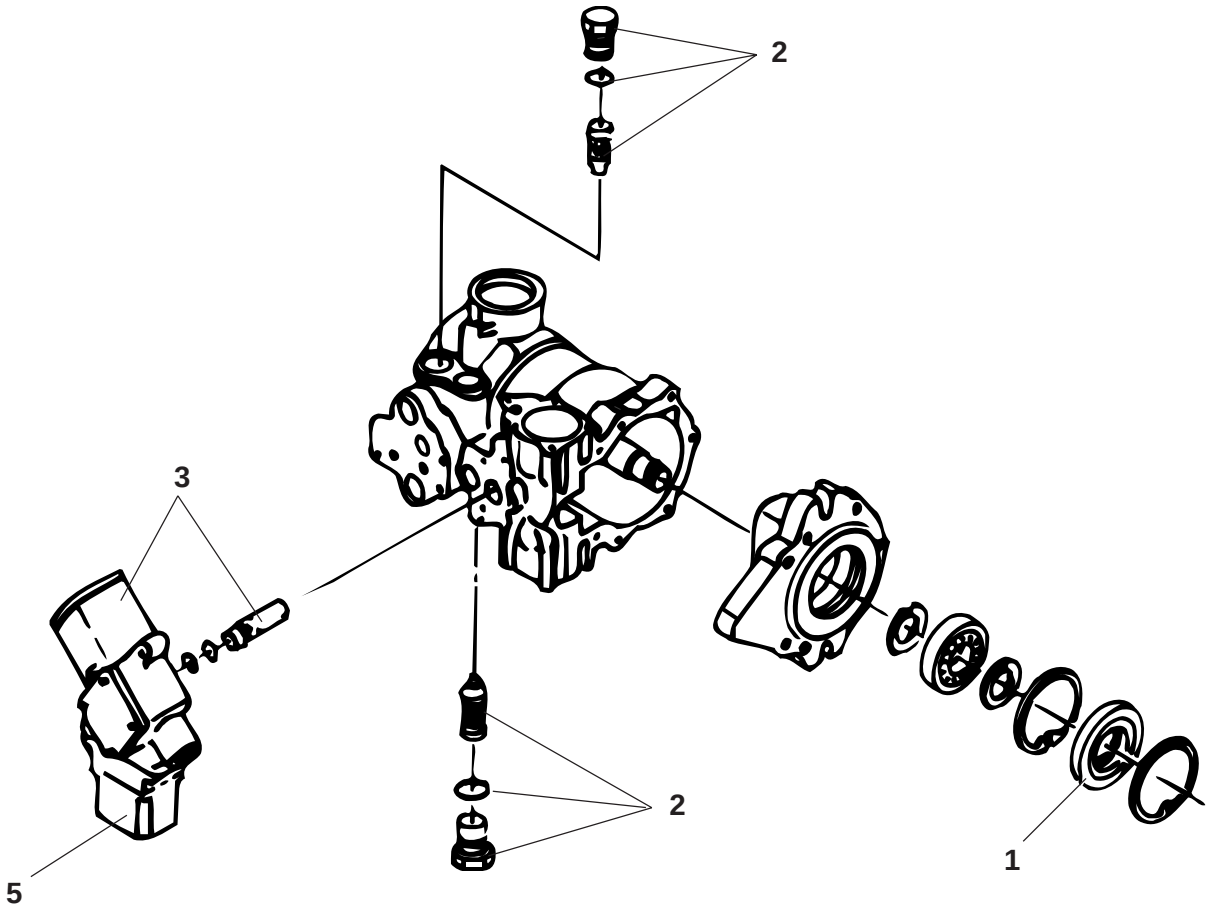


| Ref. No. | Part Number | Description | Quantity |
|---|---|---|---|
| | 45080-002-62 | Pump, Conveyor | 1 |
| 1 | 45080-002-26-02 | Shaft Seal | 1 |
| 2 | 45080-002-43-02 | Relief Valve Cartridge | 1 |
| 3 | 45080-002-43-03 | EDC Control | 1 |
| 4 | 45080-002-43-01 | Complete Seal Kit *(Not Shown)* | 1 |
| 5 | 45080-002-39-03 | Pressure Control Pilot Valve | 1 |
| 6 | Consult Factory | Seal Kit for Auxiliary Mount (Not Shown) | 1 |

Note: Only Replacement Parts Shown. For More Detailed Parts Replacement Information, Please Consult Factory.

Return to Table of Contents Page

TEREX
CEDARAPIDS

## Hydraulic Pump

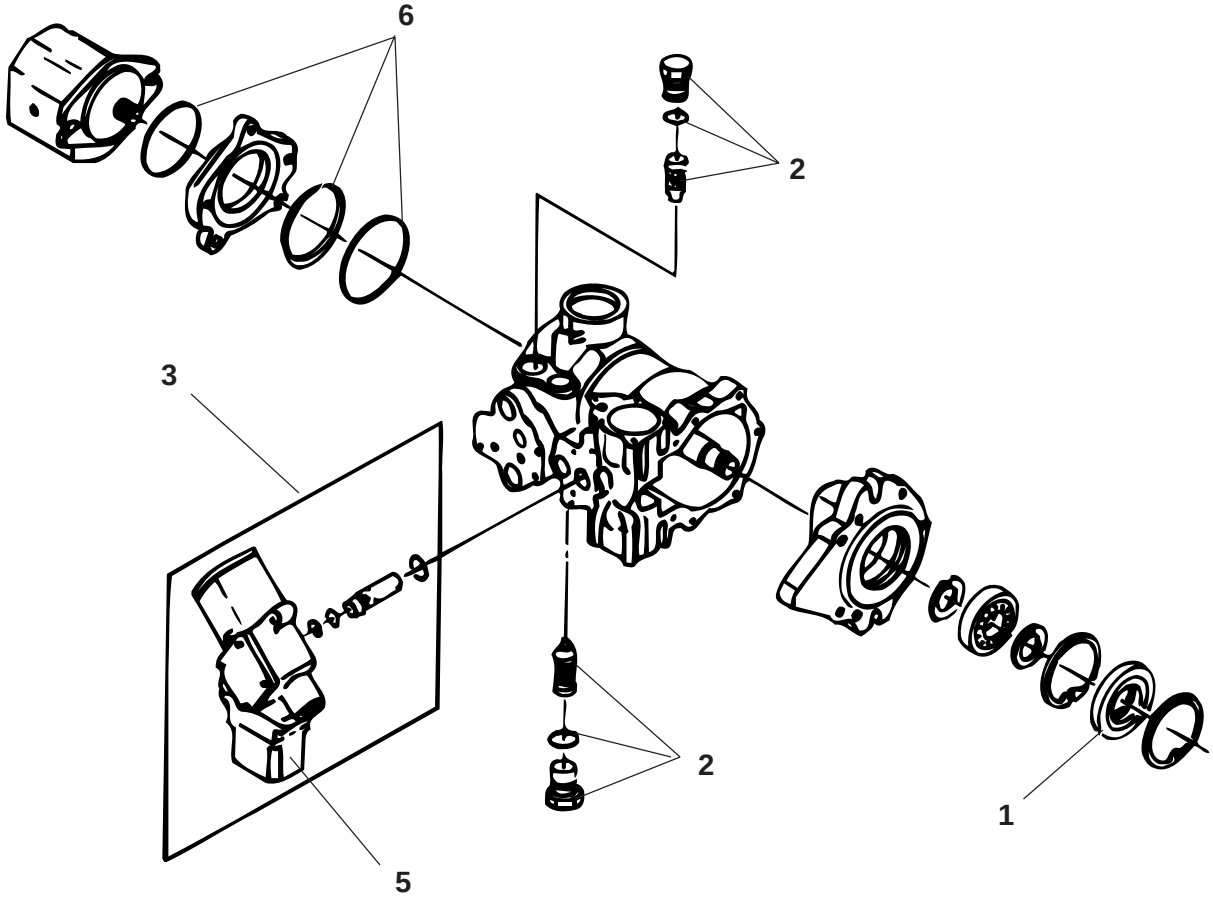


| Ref. No. | Part Number | Description | Quantity |
|---|---|---|---|
| | 45080-002-43 | Pump, Conveyor | 1 |
| 1 | 45080-002-26-02 | Shaft Seal | 1 |
| 2 | 45080-002-43-02 | Relief Valve Cartridge | 1 |
| 3 | 45080-002-43-03 | EDC Control | 1 |
| 4 | 45080-002-43-01 | Complete Seal Kit *(Not Shown)* | 1 |
| 5 | 45080-002-39-03 | Pressure Control Pilot Valve | 1 |
| 6 | 45080-002-26-07 | Seal Kit for Auxiliary Mount | 1 |

Note: Only Replacement Parts Shown. For More Detailed Parts Replacement Information, Please Consult Factory.

Cedarapids
A Terex Company

## Sound Insulation Kit - 452/552 Pavers

Parts List No 5032GJA

| Ref. No. | Part Number | Description | Quantity |
|---|---|---|---|
| 1 | 9704-506-07 | Kit, Acoustic Material - Complete | 1 |

NOTE: No illustration is associated with this parts list.

Consult Product Support department for additional information.

TEREX
CEDARAPIDS

## Conveyor & Auger Drive

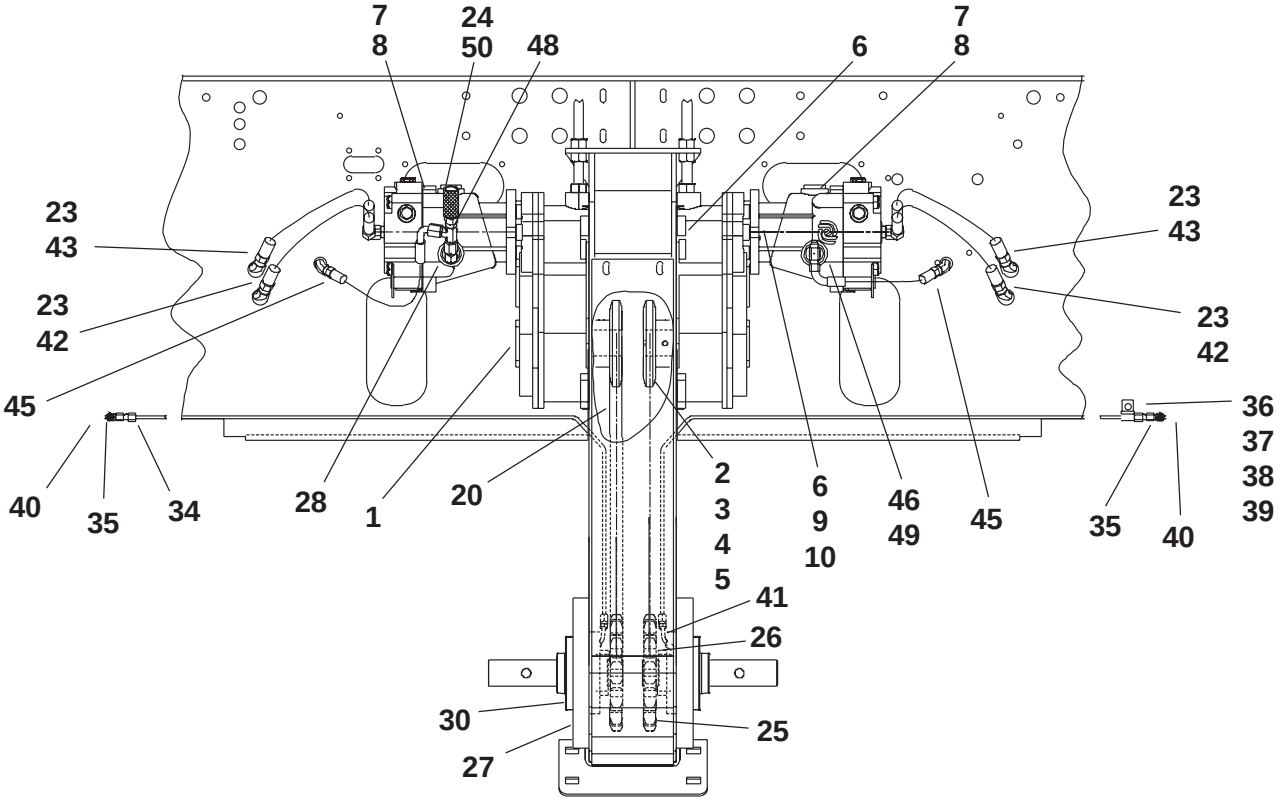


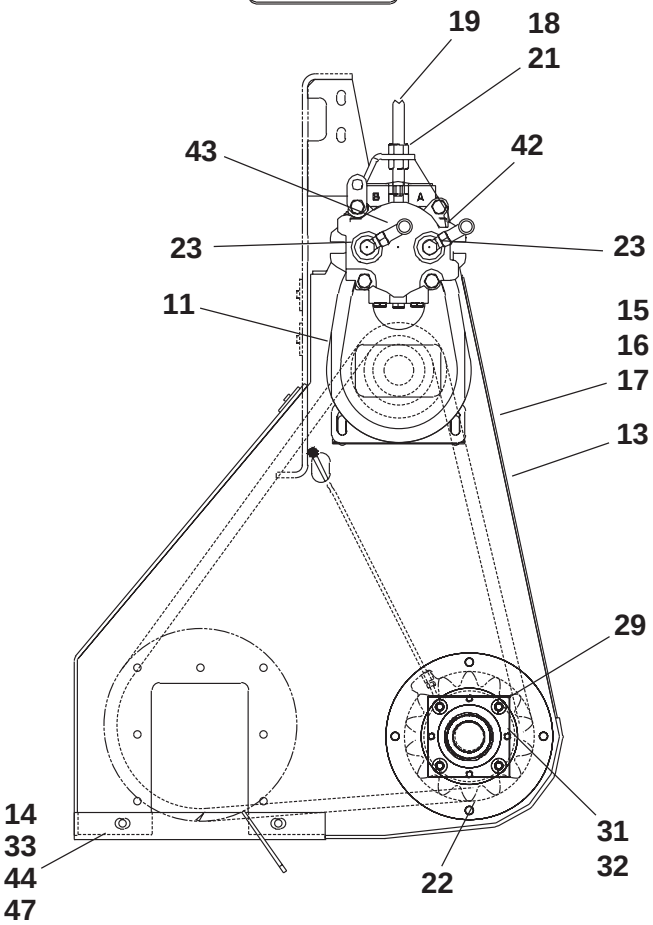

TEREX
CEDARAPIDS

## Conveyor & Auger Drive

Parts List No. 5032DTY

| Ref. No. | Part Number | Description | Quantity |
|---|---|---|---|
| 1 | 45635-500-19 | Reducer, Gear - *See Form #22792, This Section* | 2 |
| 2 | 1389A10A | Sprocket, 10T-140 1-15/16" | 2 |
| 3 | 40803-001-88 | Key, 1/2" Square x 1-7/8" | 2 |
| 4 | 7131-076 | Setscrew, 3/8" NC x 1/2" | 2 |
| 5 | 7131-078 | Setscrew, 3/8" NC x 3/4" | 2 |
| 6 | 45890-262-05 | Carriage Bolt, 3/16" | 8 |
| | 7465-001 | Washer, 1/2" Hardened Flat | 12 |
| | 45890-102-28 | Locknut, 1/2" NC | 8 |
| 7 | 45080-006-36 | Motor, Hydraulic - Includes Speed Sensor | 2 |
| | Consult Factory | Seal Kit (For above Motor) | As Req |
| 8 | 9704-154-22 | Gasket, SAE | 2 |
| 9 | 7383-073 | Capscrew, 1/2" NC x 2-1/4" | 4 |
| 10 | 45890-102-28 | Locknut, 1/2" NC | 4 |
| 11 | 9704-155-60 | Shield, Reducer | 2 |
| 12 | Not used | Item number not used | - |
| 13 | 9704-154-42 | Cover, Front | 1 |
| 14 | 9704-156-07 | Cover, Bottom | 1 |
| 15 | 7383-036 | Capscrew, 3/8" NC x 3/4" | 2 |
| 16 | 7014-018 | Washer, 3/8" | 2 |
| 17 | 7014-003 | Lockwasher, 3/8" | 2 |
| 18 | 7017-030 | Hex Nut, 3/4" NC Jam | 6 |
| 19 | 7190-023 | Adjusting Bolt, 3/4" NC x 7-1/2" | 2 |
| 20 | 9704-155-30 | Chain, # 140 | 2 |
| 21 | 7465-003 | Washer, 3/4" Hardened Flat | 4 |
| 22 | 7025-022 | Capscrew, 1/2" NC x 1-1/2" Sockethead | 8 |
| | 7014-005 | Lockwasher, 1/2" | 8 |
| 23 | 7430-282 | Elbow, #12 SAE x #12 JIC | 4 |
| 24 | 7430-413 | Connector, 1/2" MPT x 1/2" JIC | 1 |
| 25 | 9704-251-77 | Shaft, Auger Drive | 2 |
| 26 | 45134-010-41 | Flange Bearing, 1-15/16" - Complete | 2 |
| 27 | 9704-253-51 | Plate, Inner Bearing Adapter | 2 |
| 28 | 7430-315 | Elbow, 7/8" SAE x 1/2" JIC | 1 |
| 29 | 7389-045 | Capscrew, 1/2" NC x 1-1/4" - Sockethead | 8 |
| 30 | 9704-251-74 | Plate, Auger Seal | 2 |
| 31 | 7383-056 | Capscrew, 7/16" NC x 1-3/4" | 8 |
| 32 | 7014-004 | Lockwasher, 7/16" | 8 |
| 33 | 7383-068 | Capscrew, 1/2" NC x 1" | 4 |
| 34 | 9704-155-85 | Tube, Grease Long | 2 |
| 35 | 7430-008 | Connector, 1/8" x 1/4" | 2 |
| 36 | 46185-001-13 | Hose Clamp, 1/4" | 2 |
| 37 | 7383-038 | Capscrew, 3/8" NC x 1" | 2 |
| 38 | 7014-003 | Lockwasher, 3/8" | 2 |
| 39 | 7012-025 | Hex Nut, 3/8" NC | 2 |
| 40 | 7051-002 | Fitting, Grease 45° 1/8" | 2 |

- Continued -

TEREX
CEDARAPIDS

## Conveyor & Auger Drive

Parts List No. 5032DTY

| Ref. No. | Part Number | Description | Quantity |
|---|---|---|---|
| 41 | 9704-155-95 | Tube Assembly, Grease Line | 2 |
| 42 | 7673-021-35 | Hose Assembly, 3/4" ID x 21" | 2 |
| 43 | 7673-019-38 | Hose Assembly, 3/4" ID x 19" | 2 |
| 44 | 7014-020 | Washer, 1/2" | 4 |
| 45 | 7652-018-34 | Hose Assembly, Case Drain | 2 |
| 46 | 7430-256 | Connector, #10 SAE #8 JIC | 1 |
| 47 | 7014-005 | Washer, 1/2" Lock | 4 |
| 48 | 7430-345 | Tee, 1/2" JIC Swivel Nut | 1 |
| 49 | 7430-356 | Tee, 1/2" JIC Swivel Nut | 1 |
| 50 | 45191-504-01 | Coupler, 1/2" | 1 |

TEREX
CEDARAPIDS

## Speed Reducer

Parts List No. 5032DTY

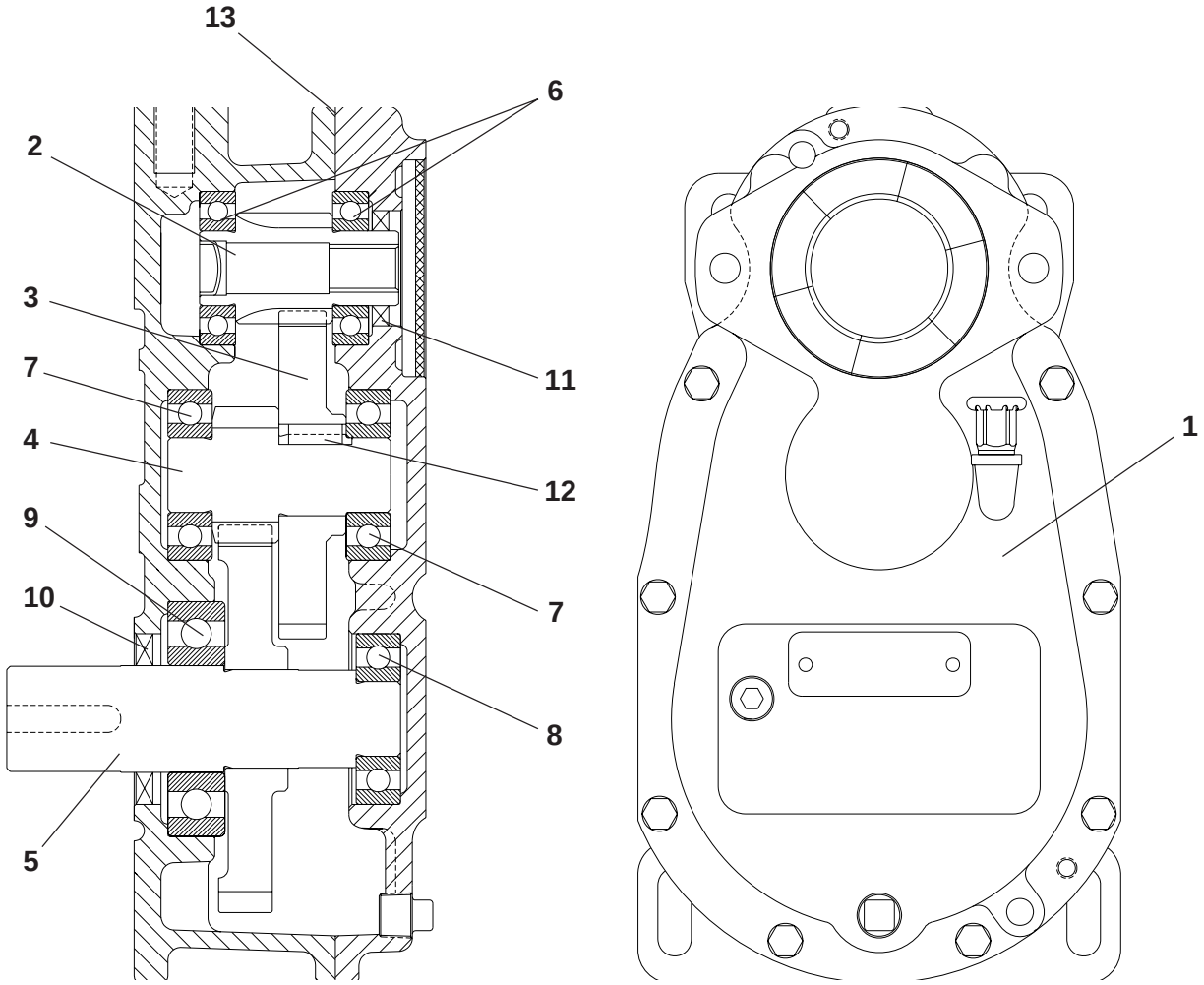


| Ref. No. | Part Number | Description | Quantity |
|---|---|---|---|
| 1 | 45635-500-19 | Speed Reducer - Complete | |
| 2 | 45635-500-07-01 | Input Pinion - 13T | 1 |
| 3 | 45635-500-07-02 | Intermediate Gear - 44T | 1 |
| 4 | 45635-500-07-03 | Intermediate Pinion - 12T | 1 |
| 5 | 45635-500-19-01 | Output Shaft w/ Gear - Integral Shaft & Gear | 1 |
| 6 | 45635-500-07-06 | Bearing - NTN 6207 | 2 |
| 7 | 45635-500-07-07 | Bearing - NTN 6307 | 2 |
| 8 | 45635-500-08-01 | Bearing - SKF 307M | 1 |
| 9 | 45635-500-08-02 | Bearing - SKF 21310E | 1 |
| 10 | 45635-500-07-09 | Seal, Oil | 1 |
| 11 | 45635-500-07-10 | Seal, Oil | 1 |
| 12 | 45635-500-07-11 | Key, 3/8" x 1" | 1 |
| 13 | 45635-500-07-15 | Gasket, Reducer | 1 |

Note: Housings and certain other items may be non-replaceable. Please consult factory.

TEREX
CEDARAPIDS

## Liners & Chains - Slat Conveyor

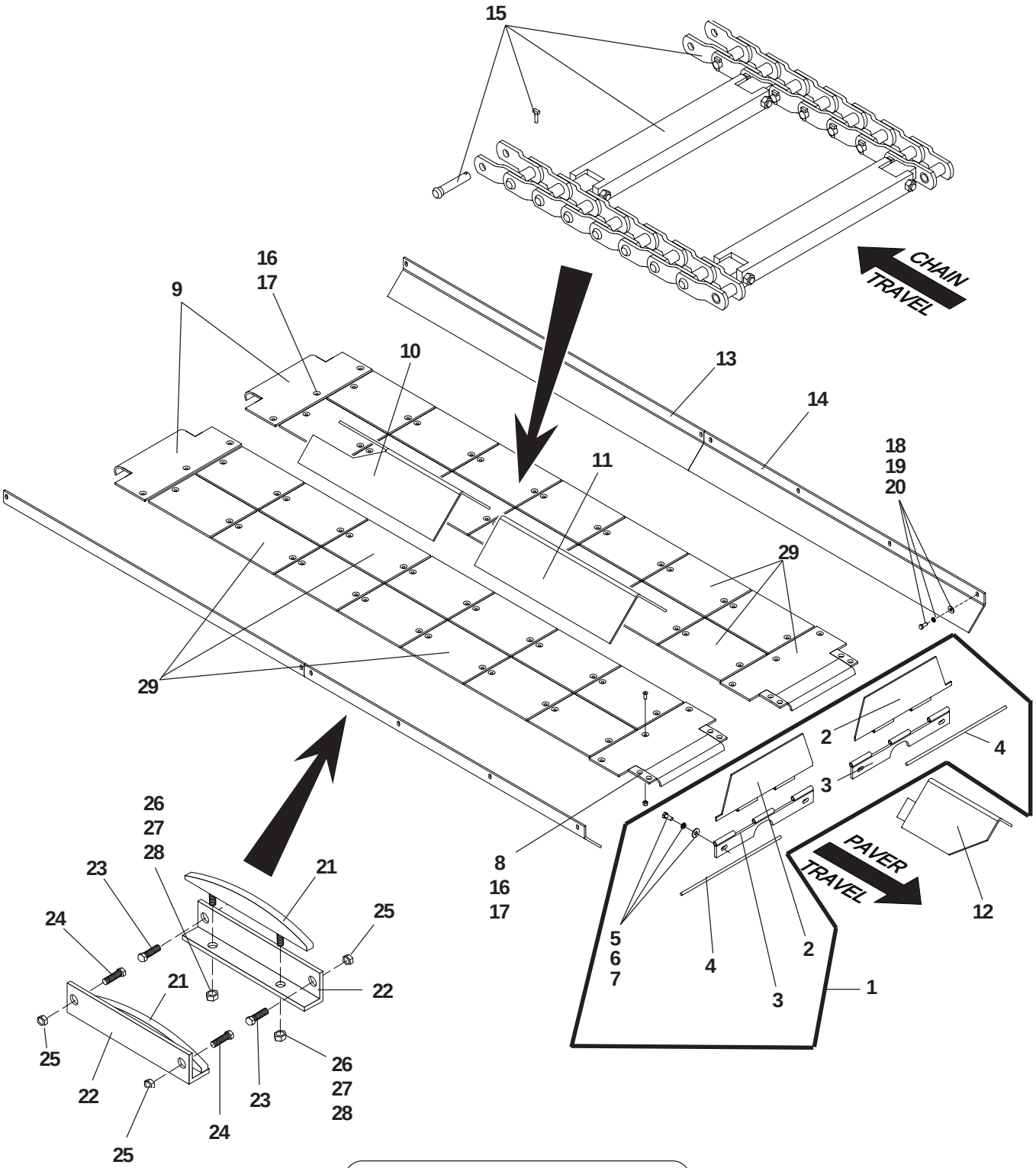


NOTE: Detail shows slats and chains as they would appear on top side of liners.

TEREX
CEDARAPIDS

## Liners & Chains - Slat Conveyor

Parts List No. 05032EDK

| Ref # | Part Number | REV | Part Name | Description | Qty |
|---|---|---|---|---|---|
| | 0970420702 | A | ASSEMBLY | SLAT CHAIN & SKIRTS | REF |
| 1 | 0970820002 | | SUB-ASSEMBLY | FRONT SLAT CONVEYOR | 1 |
| 2 | 0970420626 | | COVER | FRT SLAT CONV SHAFT | 2 |
| 3 | 0970420436 | C | HINGE | STATIONARY BASE | 2 |
| 4 | 41003025 | | SHAFT | HINGE 1/2" RD. X 25 | 2 |
| 5 | 07383100 | | CAPSCREW | 5/8" NC X 1-1/2" | 4 |
| 6 | 07014007 | | WASHER | 5/8" LOCK | 4 |
| 7 | 07014022 | | WASHER | 5/8" | 4 |
| 8 | 0970420437 | A | FLAT | LINER ENDS | 4 |
| 9 | 0970420607 | B | PLATE | CURVED LINER | 2 |
| 10 | 0970420438 | A | SKIRT | CENTER REAR | 1 |
| 11 | 0970420488 | | SKIRT | CENTER CENTER | 1 |
| 12 | 0970420539 | E | SKIRT | CENTER FRONT | 1 |
| 13 | 0970420621 | A | PLATE | OUTER REAR SKIRT | 2 |
| 14 | 0970420489 | C | SKIRT | OUTER FRONT | 2 |
| 15 | 0970420659 | A | SLAT CHAIN | 400 PAVER *(See Form 23348)* | 2 |
| 16 | 07389046 | | CAPSCREW | SCH1/2NCX1-1/2 | 14 |
| 17 | 4589010228 | B | LOCKNUT | 1/2"NC | 14 |
| 18 | 07383099 | | CAPSCREW | 5/8"NC X 1-1/4 | 12 |
| 19 | 07014022 | | WASHER | 5/8" | 12 |
| 20 | 07014007 | | WASHER | 5/8" LOCK | 12 |
| 21 | 0970420624 | B | SKATE | RETURN RAIL | 4 |
| 22 | 0970420458 | E | ANGLE | RETURN RAIL | 4 |
| 23 | 07445001 | | PLOW BOLT | 1/2" X 1-3/4" | 4 |
| 24 | 07445025 | | PLOW BOLT | 1/2"NC X 1-1/2" | 4 |
| 25 | 4589010228 | B | LOCKNUT | 1/2"NC | 8 |
| 26 | 07014020 | | WASHER | 1/2" | 8 |
| 27 | 07014005 | | WASHER | 1/2" LOCK | 8 |
| 28 | 07012027 | | HEX NUT | 1/2" NC | 8 |
| 29 | Reference Only | | Slat Conveyor Liners - Included with Main Frame Kit | | - |

TEREX
CEDARAPIDS

## Slat Conveyor Chain - 400 & 500 Series

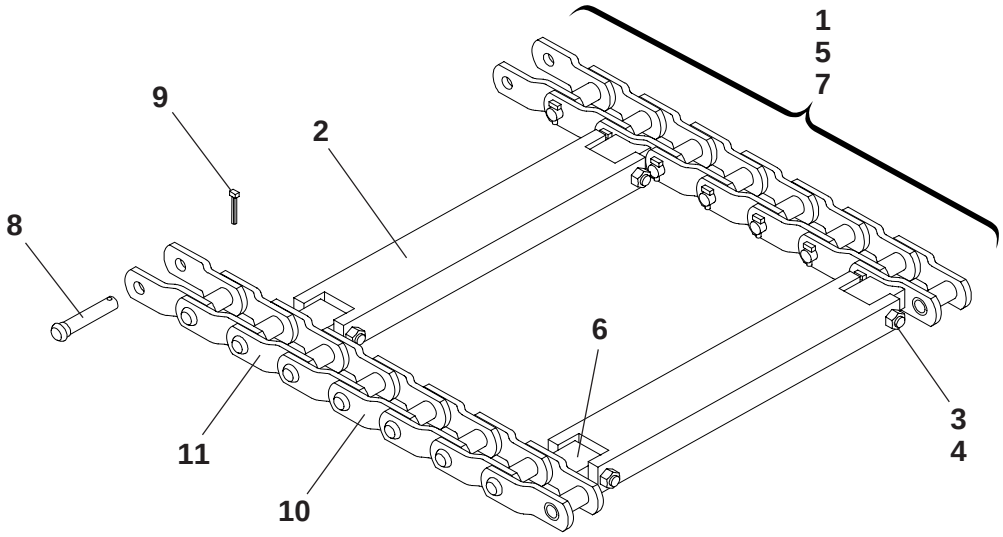


| Ref No | Part Number | Description | Quantity |
|---|---|---|---|
| | 5032EBX, 5032EDF, 5032EDJ & 5032EDK | Slat Conveyor Components - 400 Series Pavers | - |
| 1 | 9704-206-59 | Chain Assembly - Complete With Slats | 2 |
| 2 | 9704-206-59-02 | Slat Bar | 20 |
| 3 | 7383-078 | Capscrew, 1/2" x 3-1/2" | 40 |
| 4 | 45890-102-19 | Locknut, 1/2" | 40 |
| 5 | 9704-206-59-01 | Chain Assembly - Complete with Attachments | 1 |
| 6 | 4430-043-01 | Block, Slat Attachment (Welded) | 20 |
| 7 | 50005-510-01 | Slat Chain, 99 Pitch - Riveted Chain | 2 |
| 8 | 50005-510-03 | Pin (1 Per Chain Strand) | 1 |
| 9 | 50005-510-04 | Cotter Pin (1 Per Chain Strand) | 1 |
| | 5032EBY | Slat Conveyor Components - 500 Series Pavers | - |
| 1 | 9704-206-60 | Chain Assembly - Complete With Slats | 2 |
| 2 | 9704-206-59-02 | Slat Bar | 22 |
| 3 | 7383-078 | Capscrew, 1/2" x 3-1/2" | 44 |
| 4 | 45890-102-19 | Locknut, 1/2" | 44 |
| 5 | 9704-206-60-01 | Chain Assembly - Complete with Attachments | 1 |
| 6 | 4430-043-01 | Block, Slat Attachment (Welded) | 22 |
| 7 | 50005-510-02 | Slat Chain, 111 Pitch - Riveted Chain | 2 |
| 8 | 50005-510-03 | Pin (1 Per Chain Strand) | 1 |
| 9 | 50005-510-04 | Cotter Pin (1 Per Chain Strand) | 1 |
| | Reference Only | Repair Parts Only - All 400 and 500 Series Pavers | - |
| 10 | 50005-510-05 | Chain Link, Standard | As Req |
| | 50005-510-03 | Pin (Included with above Chain Link) | As Req |
| | 50005-510-04 | Cotter Pin (Included with above Chain Link) | As Req |
| 11 | 50005-510 | Chain Link, with Attachment Block | As Req |
| | 50005-510-03 | Pin (Included with above Chain Link) | As Req |
| | 50005-510-04 | Cotter Pin (Included with above Chain Link) | As Req |

TEREX
CEDARAPIDS

## Screw Conveyor Mounting

Parts List No. 05037FLL

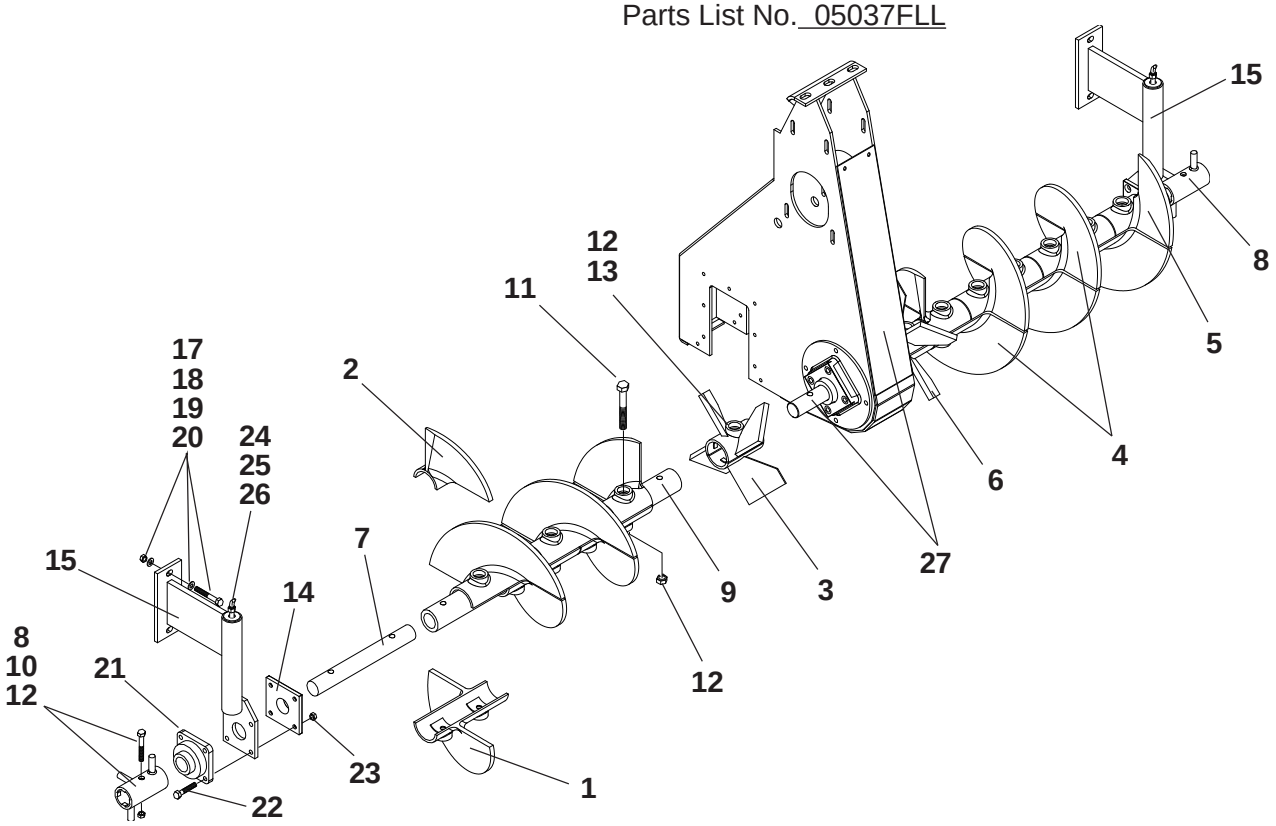


| Ref. No. | Part Number | Description | Quantity |
|---|---|---|---|
| | 9709-250-10 | Auger Kit - Complete | - |
| 1 | 9704-251-64 | Screw, 16" Left Half Section | 5 |
| 2 | 9704-251-66 | Screw, 16" Left Quarter Section | 2 |
| 3 | 9706-251-97 | Paddle, Left Reversing | 2 |
| 4 | 9706-550-03 | Screw, 16" Right Half Section | 5 |
| 5 | 9704-251-65 | Screw, 16" Right Quarter Section | 2 |
| 6 | 9706-550-04 | Paddle, Right Reversing | 2 |
| 7 | 9700-040 | Shaft, Screw Conveyor | 2 |
| 8 | 9704-251-62 | Agitator | 2 |
| 9 | 9704-251-73 | Tube, Auger Shaft | 2 |
| 10 | 7383-109 | Capscrew, 5/8" NC x 3-3/4" | 2 |
| 11 | 7383-112 | Capscrew, 5/8" NC x 4-1/2" | 12 |
| 12 | 45890-102-29 | Locknut, 5/8" NC | 16 |
| 13 | 45890-252-37 | Capscrew, 5/8" NC x 5" Grade 9 | 2 |
| 14 | 9704-251-74 | Plate, Seal - Auger Bearing | 2 |
| 15 | 9704-251-25 | Hanger, Bearing - Left Hand | 1 |
| 16 | 9704-251-26 | Hanger, Bearing - Right Hand | 1 |
| 17 | 7072-202 | Carriage Bolt, 5/8" NC x 2-1/4" | 4 |
| 18 | 7465-002 | Washer, 5/8" Hardened Flat | 4 |
| 19 | 7014-007 | Lockwasher, 5/8" | 4 |
| 20 | 7012-029 | Hex Nut, 5/8" NC | 4 |
| 21 | 45134-010-40 | Flange Bearing, 1-15/16" Bore | 2 |
| 22 | 7389-050 | Capscrew, 1/2" NC x 2-1/2" Sockethead | 8 |
| 23 | 45890-102-28 | Locknut, 1/2" NC | 8 |
| 24 | 40500-015-00-01 | Pipe, 1/8" x 15" | 2 |
| 25 | 7084-001 | Coupling, 1/8" | 2 |
| 26 | 7051-002 | Grease Fitting, 1/8" 45° | 2 |
| 27 | Reference | *See Conveyor & Auger Drive, Section 6* | - |

TEREX
CEDARAPIDS

## Slat Conveyor

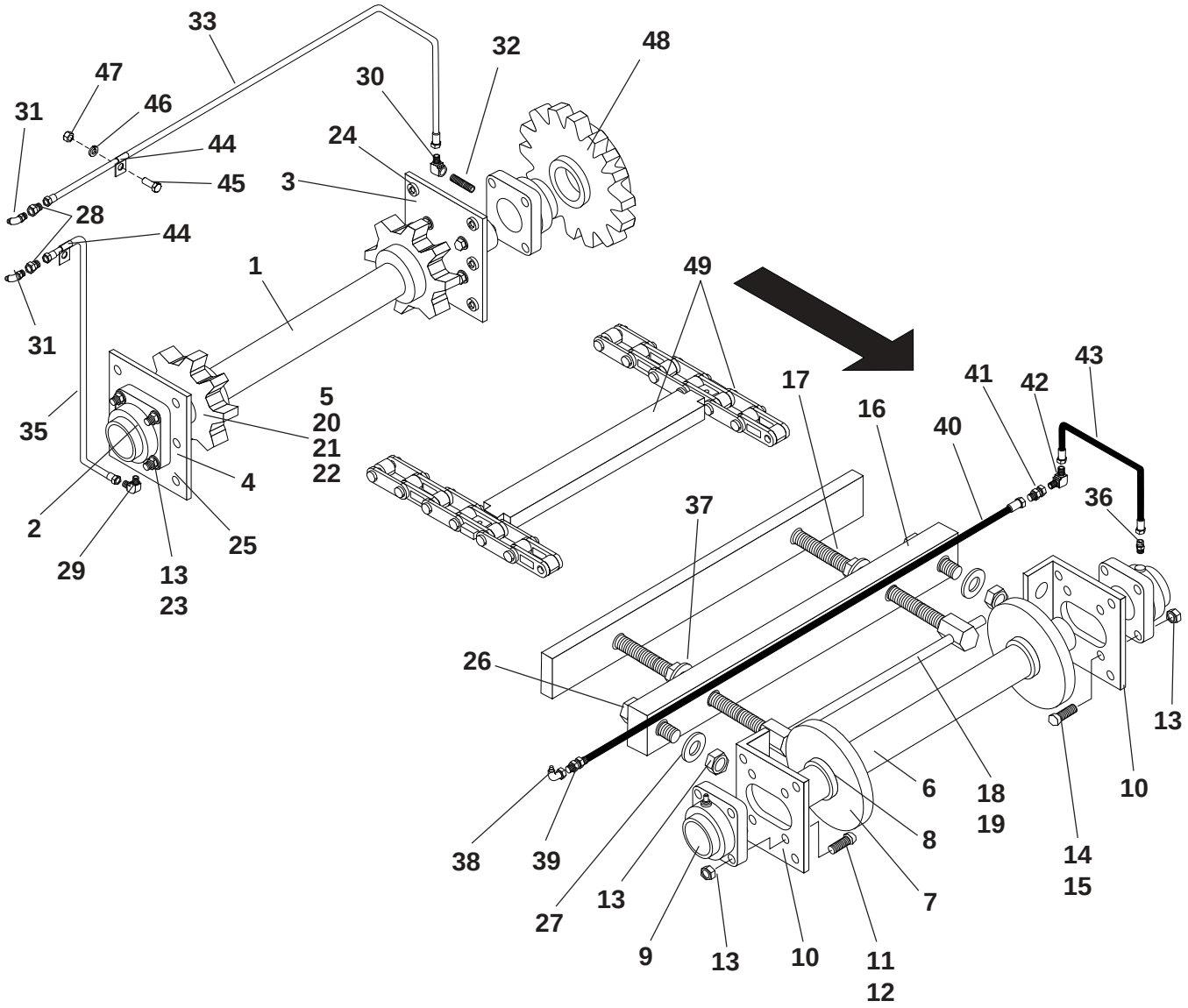


Note: Right hand assembly shown. Left hand typical.

TEREX
CEDARAPIDS

## Slat Conveyor

Parts List No. 05234EAB

| Ref. No. | Part Number | Description | Quantity |
|---|---|---|---|
| 1 | 9704-251-48 | Shaft, Conveyor Drive | 2 |
| 2 | F0203FGA | Flange Bearing, 2-3/16" - See Form #1001 | 4 |
| 3 | 9704-251-93 | Plate, Bearing Mounting - Inside | 2 |
| 4 | 9704-251-27 | Plate, Bearing Mounting - Outside | 2 |
| 5 | 9704-206-43 | Sprocket, Conveyor Drive | 4 |
| 6 | 9704-155-34 | Shaft, Takeup | 2 |
| 7 | 9704-204-46 | Idler, Takeup | 4 |
| 8 | 7396-016 | Bushing, "SD" 1-15/16" | 4 |
| 9 | F0115FGA | Flange Bearing, 1-15/16" - See Form #1001 | 4 |
| 10 | 9704-204-80 | Flat, Bearing Slide | 4 |
| 11 | 9704-155-39 | Spacer, 1/2" Pipe x 3/4" | 8 |
| 12 | 7445-013 | Plow Bolt, 1/2" NC x 2-1/2" | 8 |
| 13 | 45890-102-28 | Locknut, 1/2" NC | 36 |
| 14 | 9704-155-64 | Spacer, 1/2" Pipe x 1/2" | 8 |
| 15 | 7445-003 | Plow Bolt, 1/2" NC x 2-1/4" | 8 |
| 16 | 9704-204-81 | Base, Moving Slide | 2 |
| 17 | 9704-155-61 | Adjusting Bolt, Slide | 4 |
| 18 | 9704-155-40 | Handle, Tighten/Lock | 2 |
| 19 | 7011-017 | Cotter Pin, 1/8" x 1" | 4 |
| 20 | 40803-003 | Key, Drive Sprocket - 1/2" x 3" | 4 |
| 21 | 7131-098 | Setscrew, 1/2" x 3/8" | 4 |
| 22 | 7131-101 | Setscrew, 1/2" x 5/8" | 4 |
| 23 | 7389-047 | Capscrew, 1/2" NC x 1-3/4" - Sockethead | 16 |
| 24 | 7389-043 | Capscrew, 1/2" NC x 3/4" - Sockethead | 14 |
| 25 | 7389-086 | Capscrew, 5/8" NC x 1" - Sockethead | 14 |
| 26 | 7383-075 | Capscrew, 1/2" NC x 2-3/4" | 4 |
| 27 | 7014-020 | Washer, 1/2" | 4 |
| 28 | 7430-008 | Connector, 1/8" x 1/4" | 4 |
| 29 | 7430-016 | Elbow, 1/8" x 1/4" | 2 |
| 30 | 7430-084 | Elbow, 90° 1/8" x 1/4" | 2 |
| 31 | 7051-002 | Grease Fitting, 45° 1/8" | 4 |
| 32 | 40500-004-00-01 | Pipe, Grease | 2 |
| 33 | 9704-155-85 | Tube Assembly, Grease - Long | 2 |
| 34 | 9704-155-55 | Tube Assembly, Grease - Left Outer (Not Shown) | 1 |
| 35 | 9704-155-56 | Tube Assembly, Grease - Right Outer (Shown) | 1 |
| 36 | 7430-001 | Connector, 1/8" x 1/4" | 2 |
| 37 | 7097-018 | Washer, 1-1/8" Flat | 4 |
| 38 | 7051-004 | Grease Fitting, 90° 1/8" | 2 |
| 39 | 45720-001-11 | Coupling, 1/8" | 2 |
| 40 | 7650-026-11-01 | Hose Assembly | 2 |
| 41 | 45720-001-07 | Coupling, 1/4" x 1-1/2" | 2 |
| 42 | 7430-017 | Elbow, 90° 1/4" | 2 |
| 43 | 7650-014-33 | Hose Assembly | 2 |
| 44 | 46185-001-13 | Hose Clamp, 1/4" Hose | 4 |
| 45 | 7383-039 | Capscrew, 3/8" NC x 1-1/4" | 2 |
| 46 | 7014-003 | Washer, 3/8" Lock | 2 |
| 47 | 7012-025 | Hex Nut, 3/8" NC | 2 |
| 48 | Reference | See Conveyor & Auger Drive - Elsewhere in this manual | - |
| 49 | Reference | See Liners & Chains - Elsewhere in this manual | - |

TEREX
CEDARAPIDS

## Auger Chutes - Slat Conveyor

Parts List No. 05234EAB

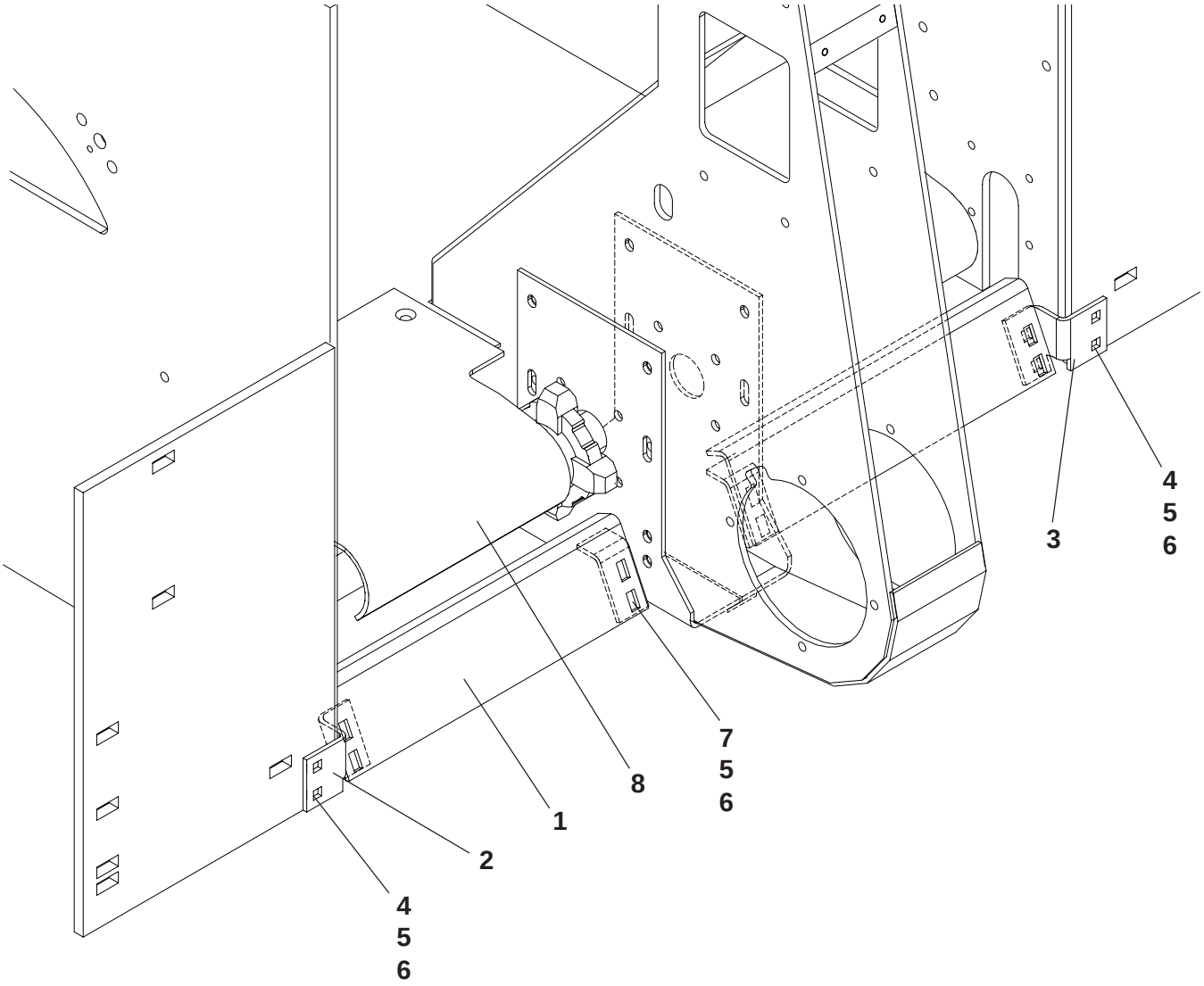


| Ref. No. | Part Number | Description | Quantity |
|---|---|---|---|
| 1 | 9704-205-96 | Plate, Deflector Slope | 2 |
| 2 | 9704-205-97 | Bracket, Left Hand | 1 |
| 3 | 9704-205-98 | Bracket, Right Hand | 1 |
| 4 | 7072-194 | Carriage Bolt, 1/2" NC x 1-3/4" | 4 |
| 5 | 7014-020 | Washer, 1/2" | 12 |
| 6 | 45890-102-28 | Locknut, 1/2" NC | 12 |
| 7 | 7072-101 | Carriage Bolt, 1/2" NC x 1-1/4" | 8 |
| 8 | Reference | See Liners & Chain - Elsewhere in this manual | - |

Note: Items 1, 2 & 3 may also be Supplied as a Kit using Part Number: 9709-200-01.

TEREX
CEDARAPIDS

## Feed Control Mounting - Less Sensors

Parts List No. 05210FEQ

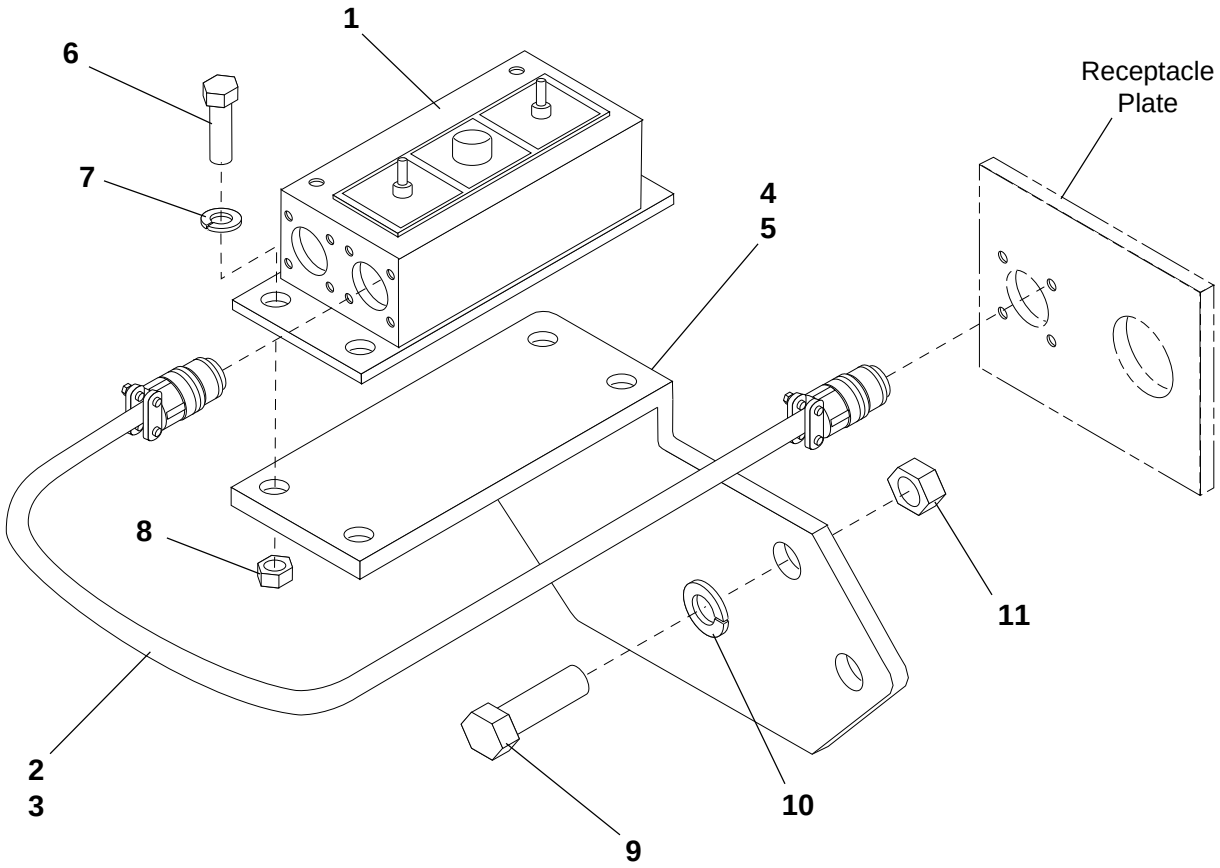


| Ref. No. | Part Number | Description | Quantity |
|---|---|---|---|
| 1 | 9709-600-11 | Kit, Feed Controller - Complete | 1 |
| | 46061-100-34 | Controller, SX Feeder - Left Hand | 1 |
| | 46061-100-35 | Controller, SX Feeder - Right Hand | 1 |
| | 9709-600-12 | Kit, Controller Cable (Includes item 2 & 3) | 1 |
| 2 | 9704-410-93 | Cable, Power - Left Hand | 1 |
| 3 | 9704-410-94 | Cable, Power - Right Hand | 1 |
| | 9709-450-07 | Kit, Sensor Mounting (Includes item 4 & 5) | 1 |
| 4 | 9704-452-76 | Mount, Sensor - Right Hand | 1 |
| 5 | 9704-452-77 | Mount, Sensor - Left Hand | 1 |
| 6 | 7383-006 | Capscrew, 1/4" NC x 1" | 8 |
| 7 | 7014-001 | Lockwasher, 1/4" | 8 |
| 8 | 7012-023 | Hex Nut, 1/4" NC | 8 |
| 9 | 7383-038 | Capscrew, 3/8" NC x 1" | 4 |
| 10 | 7014-003 | Lockwasher, 3/8" | 4 |
| 11 | 7012-025 | Hex Nut, 3/8" | 4 |

TEREX
CEDARAPIDS

## Sonic Feed Control Mounting

Parts List No. 05210FER

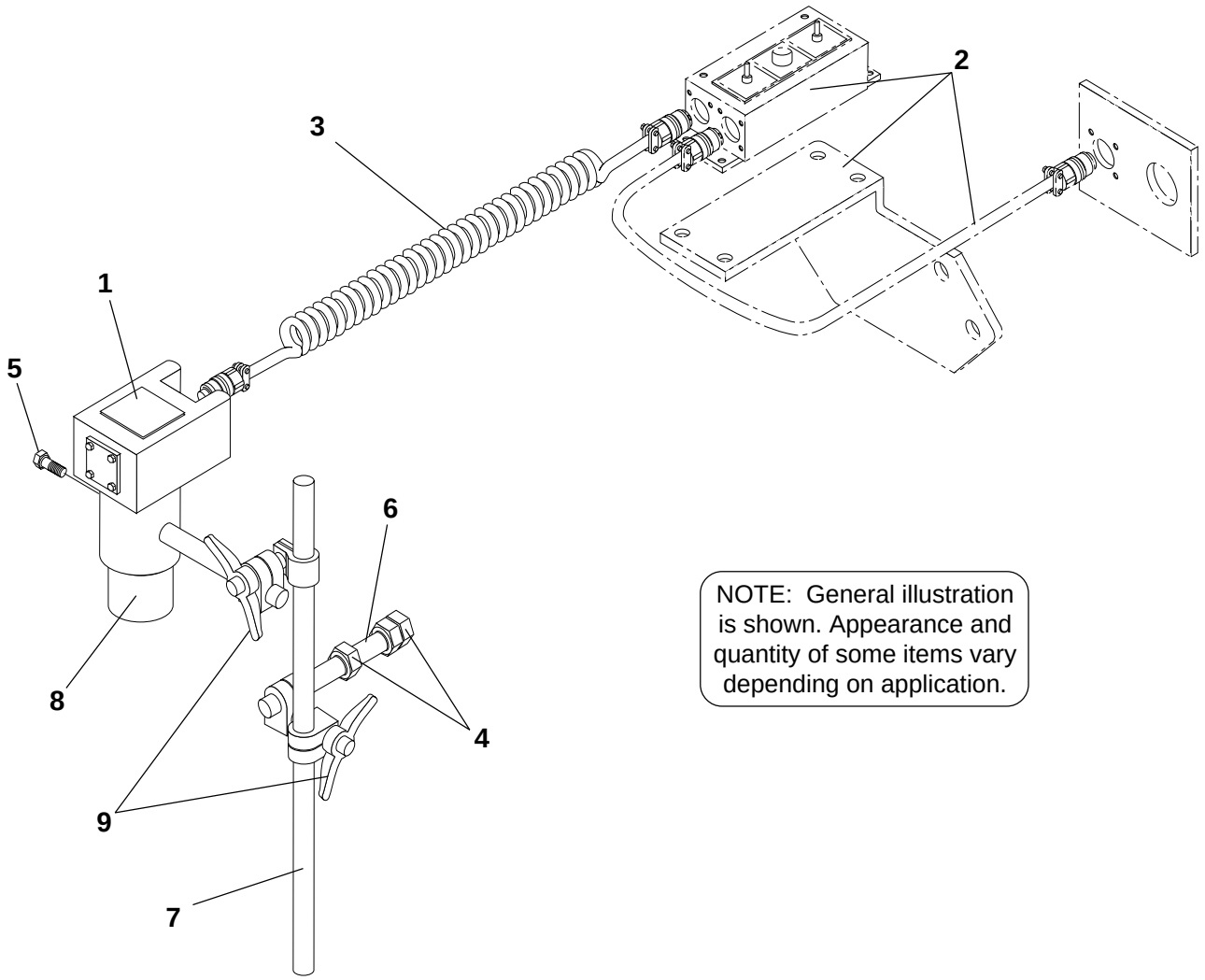


NOTE: General illustration is shown. Appearance and quantity of some items vary depending on application.

| Ref. No. | Part Number | Description | Quantity |
|---|---|---|---|
| 1 | 46061-100-36 | Sensor, Ultrasonic - 6 Pin | 2 |
| - | 46061-100-36-01 | Element, Replaceable Sensing | As Req |
| 2 | Reference Only | See Feed Controller Components - Supplied Separately | 2 |
| 3 | 46061-100-23 | Cable, Coiled | 2 |
| 4 | 7012-027 | Hex Nut, 1/2" NC | 4 |
| 5 | 7383-004 | Capscrew, 1/4" x 3/4" | 2 |
| 6 | 9704-452-62 | Stud, Gate Mounting | 2 |
| 7 | 9704-452-63 | Rod, Extension | 2 |
| 8 | 9704-452-64 | Mount, Sensor | 2 |
| 9 | 46185-001-20 | Clamp, Adjustable Swivel | 4 |

TEREX
CEDARAPIDS

## Fume Fan Parts

Parts List No. 05234SAA

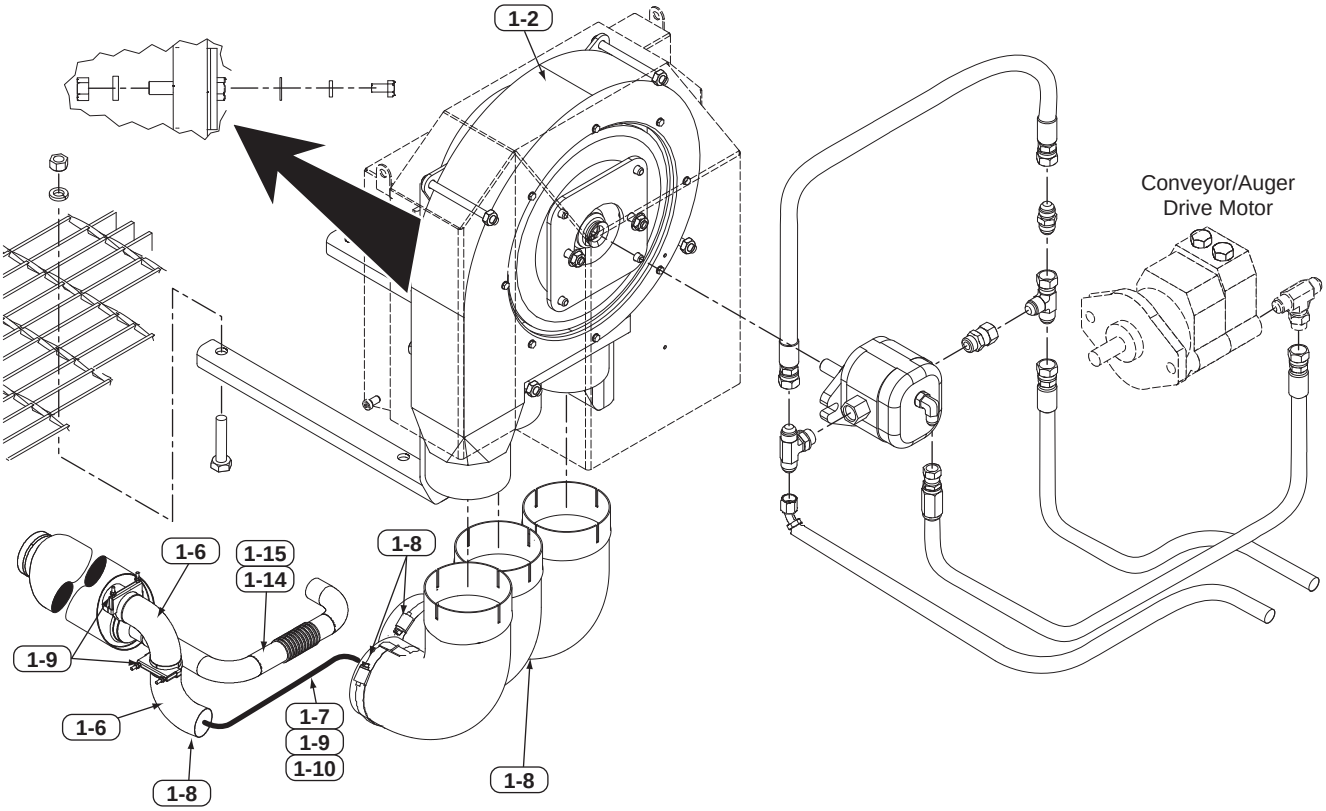


| Ref # | Part Number | REV | Part Name | Description | Qty |
|---|---|---|---|---|---|
| - | 0970432469 | | ASSEMBLY DRAWING | FUME FAN PARTS | REF |
| 1-2 | 0970830008 | | SUB-ASSEMBLY | FUME FAN | 1 |
| 1-6 | 4571000318 | B | ELBOW | 90DEG 4"IDX4"OD14GA | 2 |
| 1-7 | 4533500315 | A | DUCTING | 4" FLEXIBLE | 4' |
| 1-8 | 4519100731 | A | CLAMP | HOSE 4" BRIDGE | 4 |
| 1-9 | 4571000213 | A | U CLAMP | FLAT BAND 4" | 3 |
| 1-10 | 07012025 | | HEX NUT | 3/8" NC | 2 |
| 1-14 | 4526300103 | - | INSULATION | 3" WIDE WRAP | 12' |
| 1-15 | 4534500115 | A | TAPE | ALUMINUM 2" | 30' |

TEREX
CEDARAPIDS

## Fume Fan Sub-Assembly

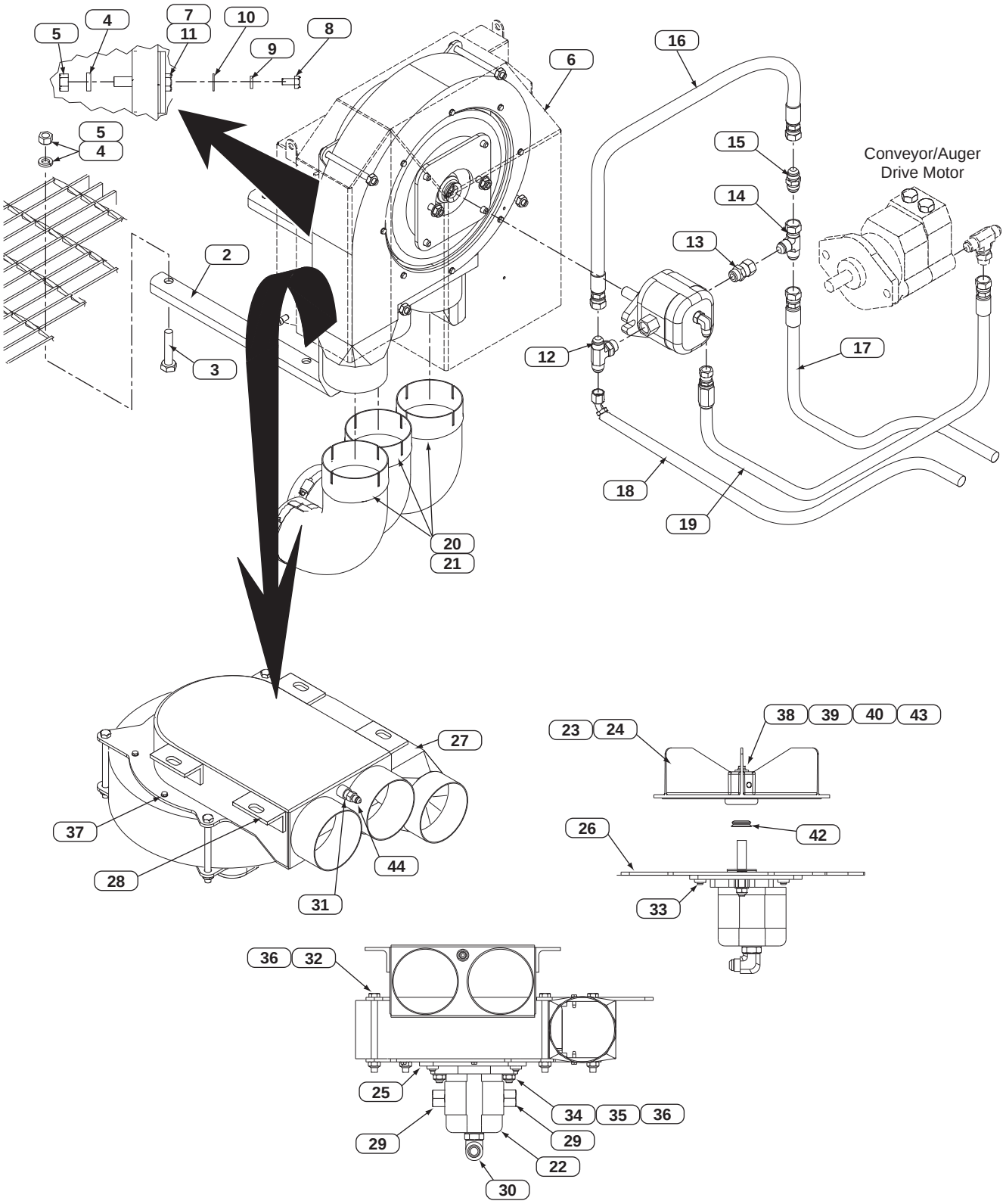

TEREX
CEDARAPIDS

## Fume Fan Sub-Assembly

Parts List No. 0970830008

| Ref # | Part Number | REV | Part Name | Description | Qty |
|---|---|---|---|---|---|
| 2 | 0970432136 | - | MOUNT | FUME FAN | 2 |
| 3 | 07383073 | | CAPSCREW | 1/2NC X 2-1/4" | 4 |
| 4 | 07014005 | | WASHER | 1/2" LOCK | 8 |
| 5 | 07012027 | | HEX NUT | 1/2" NC | 8 |
| 6 | 0970432155 | C | COVER | FUME FAN | 1 |
| 7 | 4589025234 | - | BOLT | | 4 |
| 8 | 07383019 | | CAPSCREW | 5/16"NC X 5/8" | 4 |
| 9 | 07014002 | | WASHER | 5/16" LOCK | 4 |
| 10 | 07014017 | | WASHER | 5/16" | 4 |
| 11 | 07465001 | | WASHER | 1/2" HRD FLT | 4 |
| 12 | 07430303 | | TEE | #8 BRANCH | 1 |
| 13 | 07430401 | | CONNECTOR | #8OR X1/2JIC FS | 1 |
| 14 | 07430345 | | TEE | 1/2"JIC SWIVEL NUT | 1 |
| 15 | 4525201011 | A | VALVE | 1/2" JIC CHECK | 1 |
| 16 | 0765201833 | A | HOSE ASSY | 1/2"ID X 18" | 1 |
| 17 | 0765204733 | A | HOSE ASSY | 1/2" ID X 47" | 1 |
| 18 | 0765204734 | A | HOSE ASSY | 1/2" ID X 47" | 1 |
| 19 | 076510483301 | A | HOSE ASSY | 3/8" ID X 48" | 1 |
| 20 | 4571000318 | B | ELBOW | 90DEG 4"IDX4"OD14GA | 3 |
| 21 | 4618500128 | - | CLAMP | 4.125 T-BOLT | 3 |
| 22 | 4508000646 | - | HYDRAULIC MOTOR | | 1 |
| 23 | 0970432092 | - | FAN WHEEL | PAVER FUME | 1 |
| 24 | 0970431949 | | KEY, FAN MOTOR | *(Supplied with motor)* | 1 |
| 25 | 0970431932 | A | PLATE | MOTOR MOUNT | 1 |
| 26 | 0970431927 | B | PLATE | FAN HOUSING | 1 |
| 27 | 0970431923 | B | HOUSING | FAN HOUSING | 1 |
| 28 | 0970432156 | - | INLET BOX | FAN | 1 |
| 29 | 4572077534 | - | REDUCER | 5/8" SAE TO 1/2" | 2 |
| 30 | 07430275 | | ELBOW | #6SAEM X #6JICM 90D | 1 |
| | 4525950813 | | O-RING | #6 *(For above fitting)* | 1 |
| 31 | 4572076901 | - | REDUCER | 1/4"P TO 1/8"P | 1 |
| 32 | 07383271 | | CAPSCREW | 3/8"NC X 4-1/2" | 4 |
| 33 | 07389023 | | CAPSCREW | SCH 3/8NC X3/4 | 4 |
| 34 | 07383039 | | CAPSCREW | 3/8"NC X 1-1/4 | 4 |
| 35 | 07465014 | | WASHER | 3/8"FLAT (HARD) | 4 |
| 36 | 4589010230 | A | LOCKNUT | 3/8" NC | 8 |
| 37 | 07472010 | | SCREW | 10-24 X 5/8" | 14 |
| 38 | 4589025546 | B | WASHER | FLAT .253ID X.812 | 1 |
| 39 | 07014001 | | WASHER | 1/4" LOCK | 1 |
| 40 | 4589030062 | - | CAPSCREW | M6 X 20 X 1 | 1 |
| 41 | *4599500130 | - | SEALANT | 10.8 OZ SILICONE *(Not Shown)* | 1 |
| 42 | 4521000118 | A | SEAL | | 1 |
| 43 | 4589025532 | - | WASHER | 5/8" HI STRENGTH | 1 |
| 44 | 4519151057 | - | HOSE BARB | | 1 |

*NOTE: Apply 1/4" bead of Sealant between Motor and Motor Mount Plate, Housing Plate and Fan Housing.

TEREX
CEDARAPIDS

## Fume Recovery System

Parts List No. 5032MAV

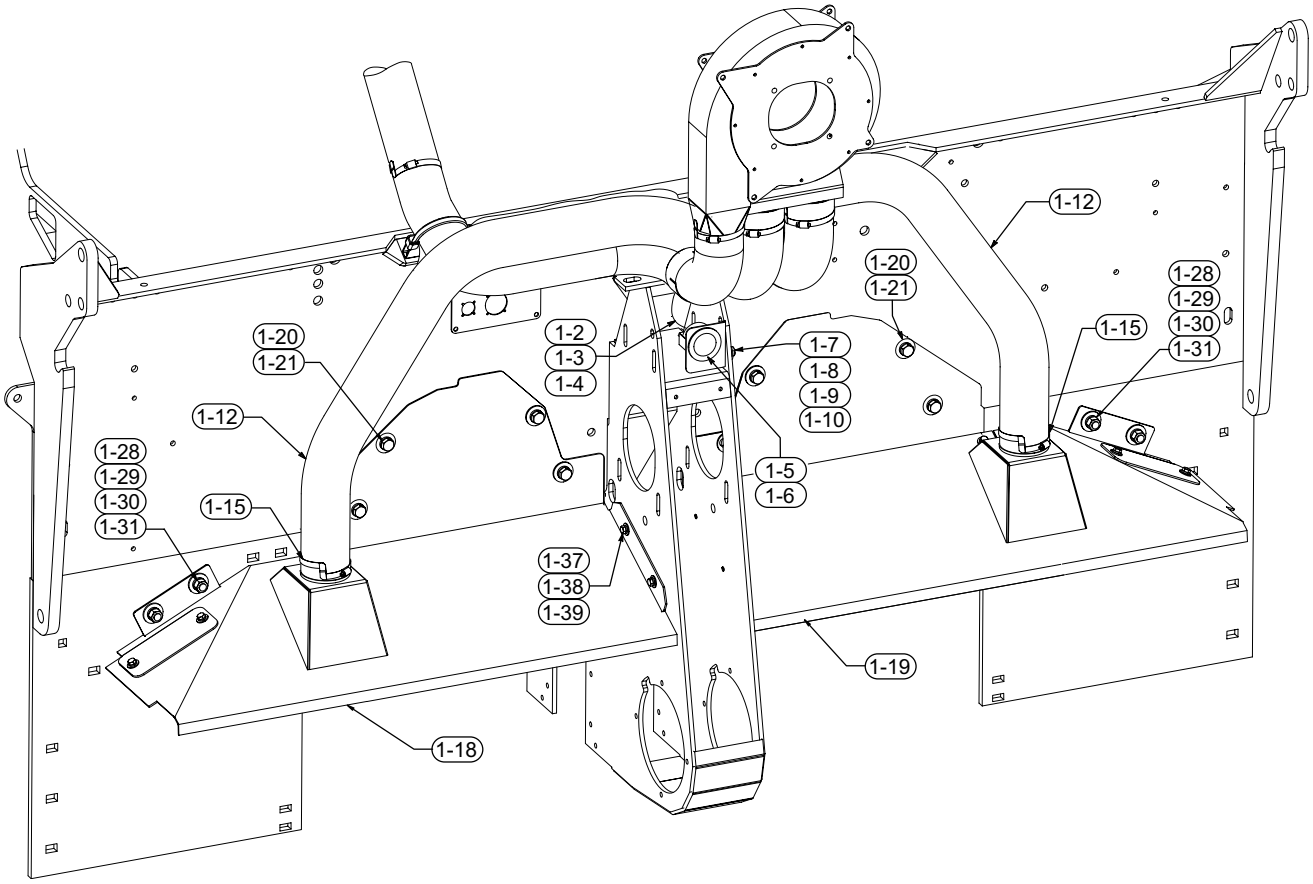


| Ref. No. | Part Number | Description | Quantity |
|---|---|---|---|
| 1-2 | 46320-001-06 | Strap | 3 |
| 1-3 | 46320-001-25 | Mount, Cable Tie | 3 |
| 1-4 | 50030-001-30 | Tubing, 3/16" I.D. | 2.0' |
| 1-5 | 9704-321-59 | Bracket, Vacuum Gauge Fume | 1 |
| 1-6 | 45865-002-44 | Gauge, Water Scale | 1 |
| 1-7 | 7383-069 | Capscrew, 1/2" x 1-1/4" | 1 |
| 1-8 | 7014-020 | Washer, 1/2" Flat | 1 |
| 1-9 | 7014-005 | Lockwasher, 1/2" | 1 |
| 1-10 | 7012-027 | Hex Nut, 1/2" | 1 |
| 1-12 | 45335-003-14 | Duct, 4" Flexible | As Req |
| 1-15 | 45191-007-31 | Clamp, 4" Hose Bridge | 2 |
| 1-17 | 9709-300-19 | Kit, Fume Hood - Includes below Hoods (Not Shown) | 1 |
| 1-18 | 9704-323-59 | Hood, Fume - Left Hand | 1 |
| 1-19 | 9704-323-60 | Hood, Fume - Right Hand | 1 |
| 1-20 | 7383-098 | Capscrew, 5/8" NC x 1" | 8 |
| 1-21 | 7014-022 | Washer, 5/8" | 8 |
| 1-28 | 7072-197 | Carriage Bolt, 5/8" NC x 1-3/4" | 4 |
| 1-29 | 7014-022 | Washer, 5/8" | 4 |
| 1-30 | 7014-007 | Lockwasher, 5/8" | 4 |
| 1-31 | 7012-029 | Hex Nut, 5/8" NC | 4 |
| 1-37 | 7383-036 | Capscrew, 3/8" NC x 3/4" | 4 |
| 1-38 | 7014-018 | Washer, 3/8" | 4 |
| 1-39 | 7014-003 | Lockwasher, 3/8" | 4 |

TEREX
CEDARAPIDS

## Tractor Accessories

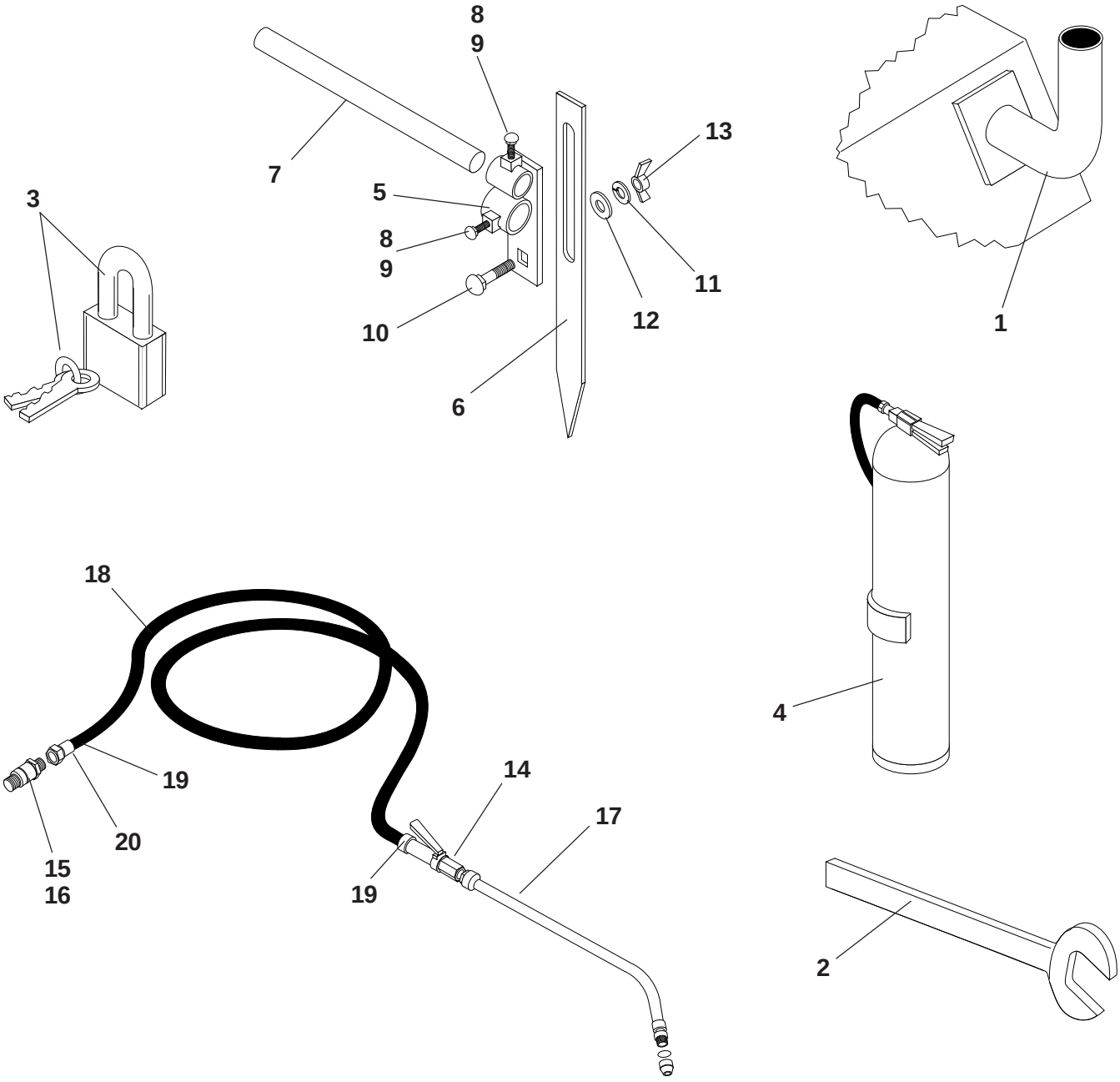

TEREX
CEDARAPIDS

## Tractor Accessories

| Ref. No. | Part Number | Description | Quantity |
|---|---|---|---|
| 1 | 9704-319-73 | Extension, Exhaust | 1 |
| 2 | 45500-750-10 | Wrench, Open End | 1 |
| 3 | 46000-004-04 | Padlock, with Keys | 7 |
| 4 | 45515-004-03 | Extinguisher, Fire | 1 |
| | 9704-450-63 | Guide Marker Assembly - Complete | 1 |
| 5 | 9704-902-11 | Bracket | 1 |
| 6 | 5036KD-14 | Marker, Guide | 1 |
| 7 | 40509-041 | Pipe, 1-1/2" x 41" | 1 |
| 8 | 7383-070 | Capscrew, 1/2" NC x 1-1/2" | 5 |
| 9 | 7012-005 | Square Nut, 1/2" NC | 5 |
| 10 | 7072-052 | Carriage Bolt, 3/8" NC x 1" | 1 |
| 11 | 7014-003 | Lockwasher, 3/8" | 1 |
| 12 | 7014-018 | Washer, 3/8" | 1 |
| 13 | 7056-011 | Wing Nut, 3/8" NC | 1 |
| | 9704-454-15 | Spraydown Hose - Complete | 1 |
| 14 | 45251-001-76 | Valve, Shut-Off | 1 |
| 15 | 45191-504-29-04 | Nipple, 1/8" Brass | 1 |
| 16 | 45191-504-29-02 | Cap, Dust | 1 |
| 17 | 45251-006-05 | Extension, 18" - with Nozzle | 1 |
| 18 | 50030-001-02 | Hose, 3/8" | 30' |
| 19 | 45191-004-05 | Clamp | 2 |
| 20 | 40500-002-50-02 | Nipple, 1/8" NPT x 2 - 1/2" | 1 |
| | Additional Parts (Not Shown) | | |
| 21 | 9704-800-43 | Kit, Belt Tensioning | 1 |
| 22 | 45080-527-07 | Test Hose | 1 |
| 23 | 45080-527-05 | Adapter | 1 |
| 24 | 7435-134 | Machine Screw, 1/4" x 5/8" | 5 |
| 25 | 7014-016 | Washer, 1/4" | 5 |
| 26 | 45890-102-36 | Locknut, 1/4" | 5 |
| 27 | 7383-038 | Capscrew, 3/8" NC x 1" | 4 |
| 28 | 7014-003 | Lockwasher, 3/8" | 4 |

TEREX
CEDARAPIDS

## Strobe Kit

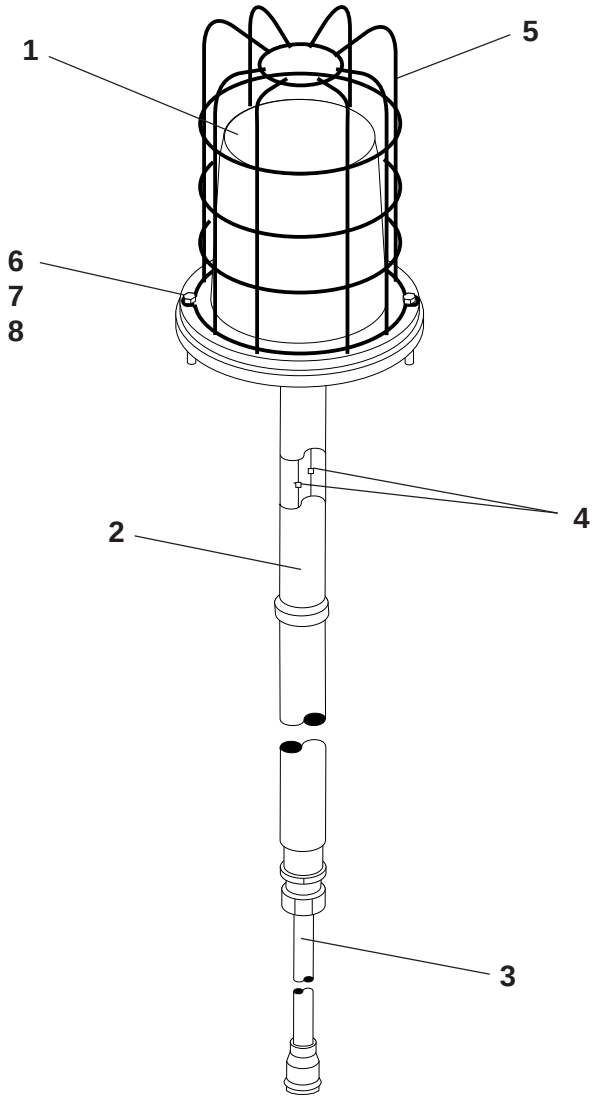


| Ref. No. | Part Number | Description | Quantity |
|---|---|---|---|
| | 9704-750-13 | Strobe Kit - Complete | 1 |
| 1 | 46270-003-12 | Lamp, Strobe | 1 |
| 2 | 9704-750-12 | Mount, Strobe | 1 |
| 3 | 9704-410-47 | Cable | 1 |
| 4 | 46275-001-28 | Lug | 2 |
| 5 | 46270-003-13 | Guard, Strobe | 1 |
| 6 | 7383-006 | Capscrew, 1/4" NC x 1" | 2 |
| 7 | 7014-001 | Washer, 1/4" Lock | 2 |
| 8 | 7012-023 | Nut, Hex 1/4" NC | 2 |
| 9 | 7012-003 | Nut, Square 3/8" NC - *(Not Shown)* | 1 |
| 10 | 5036PGB04 | Bolt, Right Angle 3/8" - *(Not Shown)* | 1 |

Cedarapids
A Terex Company

## Console Cover

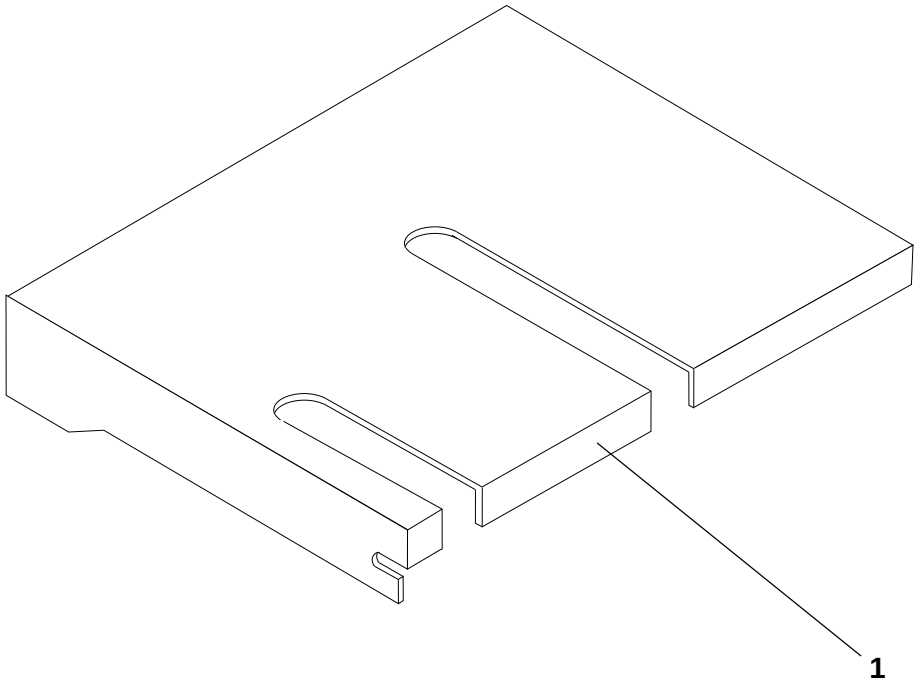


| Ref. No. | Part Number | Description | Quantity |
|---|---|---|---|
| 1 | 9704-505-47 | Console Cover, Rubber Tire Paver | 1 |
| *The following hardware is supplied with Console Cover, not shown on the illustration:* | | | |
| 2 | 7455-012 | Screw, Shoulder 3.8" x 5/8" | 2 |
| 3 | 7014-002 | Washer, 5/16" Lock | 2 |
| 4 | 7012-024 | Hex Nut, 5/16" NC | 2 |
| 5 | 7383-074 | Capscrew, 1/2" x 2-1/2" | 2 |
| 6 | 7014-005 | Washer, 1/2" Lock | 2 |
| 7 | 7012-027 | Hex Nut, 1/2" NC | 4 |

*NOTE: Refer to Control Console in Section 8 for additional information.*

Cedarapids
A Terex Company

## Console Hydraulics

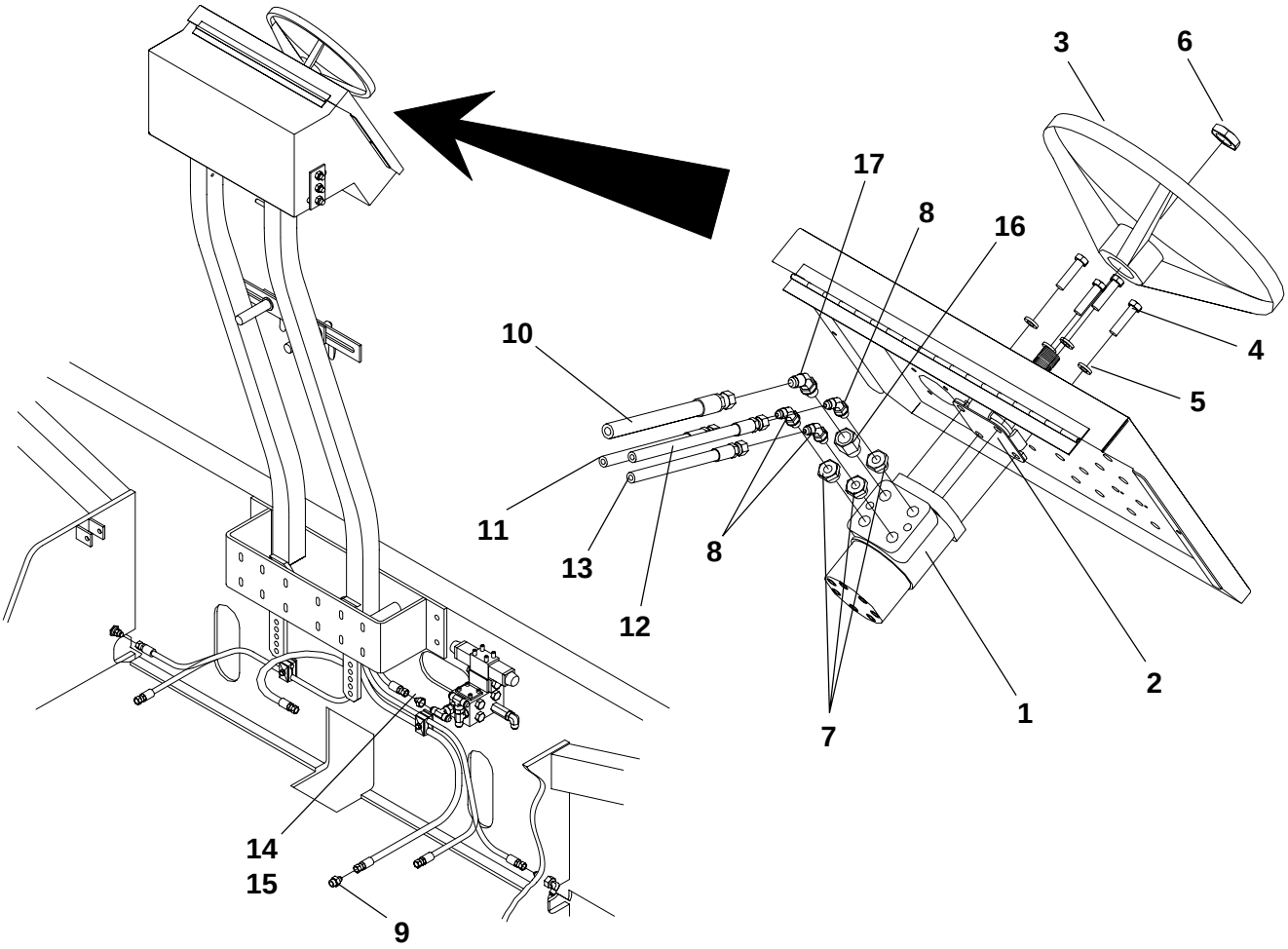


| Ref. No. | Part Number | Description | Quantity |
|---|---|---|---|
| 1 | 45259-005-20 | Valve, Steering | 1 |
| 2 | 45259-507-09 | Column, Steering | 1 |
| 3 | 9704-502-98 | Wheel, Steering | 1 |
| 4 | 7383-039 | Capscrew, 3/8" x 1-1/4" | 4 |
| 5 | 7014-003 | Lockwasher, 3/8" | 4 |
| 6 | 45259-517-07 | Nut | 1 |
| 7 | 45720-776-04 | Adapter, 1/2" x 1/4" | 3 |
| 8 | 7430-311 | Elbow, 45° 1/4" x 7/16" | 3 |
| | 45259-508-12 | O-Ring (for above fitting) | As Req |
| 9 | 7430-253 | Fitting, 1/2" x 3/8" | 1 |
| | 45259-508-14 | O-Ring (for above fitting) | As Req |
| 10 | 7651-120-33 | Hose Assembly, Return | 1 |
| 11 | 7650-103-33-02 | Hose Assembly, Pressure | 1 |
| 12 | 7650-130-33-01 | Hose Assembly, Steering | 1 |
| 13 | 7650-130-33-01 | Hose Assembly, Steering | 1 |
| 14 | 7430-325 | Reducer, 1/2" x 3/8" | 2 |
| 15 | 7430-207 | Nut, 1/2" | 1 |
| 16 | 45720-775-55-01 | Reducer, 1/2" x 3/8" | 1 |
| 17 | 7430-313 | Elbow, 45° 3/8" | 1 |

TEREX
CEDARAPIDS

## Console - Mechanical Parts

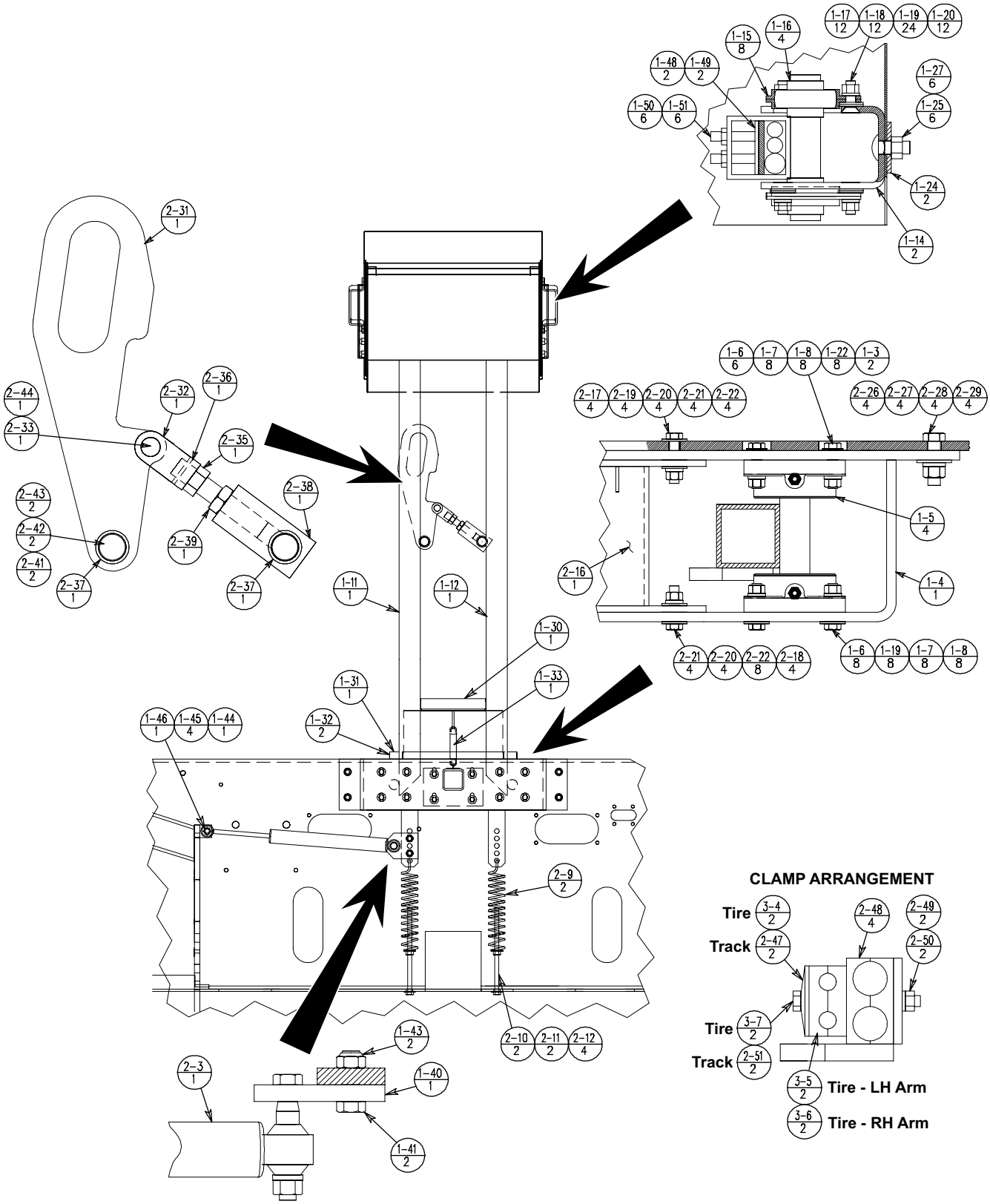

TEREX
CEDARAPIDS

## Console - Mechanical Parts

Parts List No. 5032MNM

| Ref. No. | Part Number | Description | Quantity |
|---|---|---|---|
| 1-3 | 7383-041 | Capscrew, 3/8" x 1-3/4" | 2 |
| 1-4 | 9704-504-94 | Base, Console Support | 1 |
| 1-5 | FO103FGA | Flange Bearing, 1-3/16" - See Form #1001, This Section | 4 |
| 1-6 | 7383-040 | Capscrew, 3/8" x 1-1/2" | 14 |
| 1-7 | 7014-003 | Lockwasher, 3/8" | 16 |
| 1-8 | 7012-025 | Hex Nut, 3/8" | 16 |
| 1-10 | 9709-500-02 | Kit, Console Arm Support (Not Identified on illustration | 1 |
| 1-11 | 9704-503-68 | Support, Console - Right Hand | 1 |
| 1-12 | 9704-503-73 | Support, Console - Left Hand | 1 |
| 1-14 | 9704-503-64 | Bracket, Upper Bearing | 2 |
| 1-15 | 45129-001-04 | Flangette, Bearing | 8 |
| 1-16 | 7041-007 | Ball Bearing, 1-3/16" Bore | 4 |
| 1-17 | 7389-025 | Capscrew, 3/8" x 1-1/4" Sockethead | 12 |
| 1-18 | 7014-003 | Lockwasher, 3/8" | 12 |
| 1-19 | 7014-018 | Washer, 3/8" Flat | 32 |
| 1-20 | 7012-025 | Hex Nut, 3/8" | 12 |
| 1-22 | 7097-009 | Washer, 3/8" SAE Flat | 8 |
| 1-24 | 9704-503-79 | Flat, Console Bracket Backing | 2 |
| 1-25 | 7072-101 | Carriage Bolt, 1/2" NC x 1-1/4" | 6 |
| 1-27 | 45890-102-28 | Locknut, 1/2" NC | 6 |
| 1-30 | 9704-505-86 | Lock, Console | 1 |
| 1-31 | 9704-504-90 | Rod, Hinge | 1 |
| 1-32 | 7011-019 | Cotter Pin, 5/32" x 1" | 2 |
| 1-33 | 5036XQ07 | Coil Spring | 1 |
| 1-40 | 9704-503-02 | Flat, Damper Support | 1 |
| 1-41 | 7383-070 | Capscrew, 1/2" x 1-1/2" | 2 |
| 1-43 | 45890-102-28 | Locknut, 1/2" | 2 |
| 1-44 | 7383-060 | Capscrew, 7/16" x 2-3/4" | 1 |
| 1-45 | 7014-019 | Washer, 7/16" | 4 |
| 1-46 | 45890-102-31 | CrownLock, 7/16" NC | 1 |
| 1-48 | 9704-503-94 | Flat | As Req |
| 1-49 | 9704-503-95 | Rubber | As Req |
| 1-50 | 7131-083 | Setscrew, 3/8" x 1-3/4" | As Req |
| 1-51 | 7017-025 | Hex Nut, 3/8" Jam | As Req |
| 2-3 | 45090-010-45 | Damper, Steering | 1 |
| 2-9 | 9704-503-05 | Spring, Console Arm | 2 |
| 2-10 | 7285-033 | Adjusting Bolt, 1/2" NC x 10" | 2 |
| 2-11 | 7014-020 | Washer, 1/2" | 2 |
| 2-12 | 7012-027 | Hex Nut, 1/2" NC | 4 |
| 2-16 | 9704-504-93 | Stop, Console Arm | 1 |
| 2-17 | 7383-041 | Capscrew, 3/8" x 1-3/4" | 4 |
| 2-18 | 7383-039 | Capscrew, 3/8" x 1-1/4" | 4 |
| 2-19 | 7097-009 | Washer, 3/8" Flat | 4 |
| 2-20 | 7014-003 | Lockwasher, 3/8" | 8 |

- Continued Next Page -

TEREX
CEDARAPIDS

## Console - Mechanical Parts

Parts List No. 5032MNM

| Ref. No. | Part Number | Description | Quantity |
|---|---|---|---|
| 2-21 | 7012-025 | Hex Nut, 3/8" | 8 |
| 2-22 | 7014-018 | Washer, 3/8" Flat | 12 |
| 2-26 | 7383-071 | Capscrew, 1/2" x 1-3/4" | 4 |
| 2-27 | 7014-005 | Lockwasher, 1/2" | 4 |
| 2-28 | 7012-027 | Hex Nut, 1/2" | 4 |
| 2-29 | 7014-020 | Washer, 1/2" Flat | 4 |
| 2-31 | 9704-505-07 | Handle, Console Lock | 1 |
| 2-32 | 9704-505-08 | Yoke, Console Clamp | 1 |
| 2-33 | 7198-010 | Yoke Pin, 3/4" | 1 |
| 2-35 | 9704-505-01 | Bolt, Console Lock | 1 |
| 2-36 | 7253-026 | Retaining Ring | 1 |
| 2-37 | 40505-000-75 | Pipe, 1" Standard x 3/4" | 2 |
| 2-38 | 9704-505-09 | Block, Console Lock | 1 |
| 2-39 | 7017-052 | Hex Nut, 3/4" Jam | 1 |
| 2-41 | 7014-020 | Washer, 1/2" | 2 |
| 2-42 | 7383-068 | Capscrew, 1/2" NC x 1" | 2 |
| 2-43 | 7014-005 | Lockwasher, 1/2" | 2 |
| 2-44 | 7011-019 | Cotter Pin, 5/32" x 1" | 1 |
| 2-47 | 45080-529-27 | Cover Plate, Clamp | 2 |
| 2-48 | 45080-529-35 | Clamp Half, 1" | 4 |
| 2-49 | 7014-002 | Lockwasher, 5/16" | 2 |
| 2-50 | 7012-024 | Hex Nut, 5/16" | 2 |
| 2-51 | 7383-027 | Capscrew, 5/16" x 2-1/4" | 2 |
| 3-4 | 45080-529-26 | Cover Plate, Clamp | 2 |
| 3-5 | 45080-529-23 | Clamp Half, 1/2" | 2 |
| 3-6 | 45080-529-24 | Clamp Half, 5/8" | 2 |
| 3-7 | 7383-032 | Capscrew, 5/16" x 3-1/2" | 2 |

TEREX
CEDARAPIDS

## Emblems

Parts List No. 5210KFB

| Ref. No. | Part Number | Description | Quantity |
|---|---|---|---|
| 1-3 | 04495-008 | Diagram, Hydraulic Schematic (Ref. Drawing) | 1 |
| 1-5 | 46010-600-06 | Tape, White 1" | 4' |
| 1-7 | 04493-500-01 | Emblem, Lifting Points - ISO | 4 |
| 1-8 | 04493-500-03 | Emblem, Tie-Down Points - ISO | 4 |
| 1-14 | 04494-103-11 | Emblem, Coolant Filling | 1 |
| 1-15 | 04418-628 | Emblem, Moving Procedure (Console Area) | 1 |
| 1-16 | 04490-400-04 | Emblem, Danger Auger Entanglement | 1 |
| 1-17 | 04491-500-03 | Emblem, Warning Asphalt Burns | 1 |
| 1-18 | 04491-500-07 | Emblem, Warning Falling Hazard | 1 |
| 1-19 | 04490-400-02 | Emblem, Danger Electrical Hazard | 1 |
| 1-20 | 04491-500-05 | Emblem, Warning Hearing Hazard | 1 |
| 1-21 | 04491-500-04 | Emblem, Warning Hood Crushing | 2 |
| 1-22 | 04493-500-05 | Emblem, Do Not Step | 2 |
| 1-23 | 04418-955 | Emblem, USA Flag | 2 |
| 1-24 | 04494-104-91 | Emblem, Paver Hood Stripe - Left Hand | 1 |
| 1-25 | 04494-104-92 | Emblem, Paver Hood Stripe - Right Hand | 1 |
| 1-26 | 04418-625 | Emblem, Lifting Points | 1 |
| 1-27 | 04418-607 | Emblem, Tie Downs | 1 |
| 1-28 | 04491-500-16 | Emblem, Warning Lockout / Entanglement | 1 |
| 1-31 | 04418-197 | Emblem, Slow Moving Vehicle | 1 |
| 1-32 | 07435-135 | Machine Screw | 2 |
| 1-33 | 07014-001 | Washer | 2 |
| 1-34 | 07012-023 | Hex Nut | 2 |
| 1-40 | 04490-400-01 | Emblem, Danger Battery Explosion | 1 |
| 1-41 | 04418-803 | Emblem, Oil Reservoir | 1 |
| 1-42 | 04491-500-10 | Emblem, Warning Fluid Injection | 1 |
| 1-43 | 04418-135-11 | Emblem, Diesel | 1 |
| 1-44 | 04418-836 | Emblem, Reservoir Level | 1 |
| 1-45 | 04494-103-01 | Emblem, Towing Instructions | 1 |
| 1-46 | 04491-500-11 | Emblem, Warning Emergency Brake | 1 |
| 2-2 | 04418-866 | Emblem, Patent | 1 |
| 2-3 | 04418-925 | Emblem, Paver Lube Plate | 1 |
| 2-4 | 04493-023 | Plate, Serial | 1 |
| 2-5 | 07073-013 | Screw, Drive | 4 |
| 2-6 | 04418-934 | Emblem, Paver Vacuum Indicator | 1 |
| 2-8 | 04418-950 | Emblem, Engine Coolant Drain | 1 |
| 2-9 | 04418-720 | Emblem, Engine Oil Drain | 1 |
| 2-15 | 09700-079 | Emblem, Gate Opening | 1 |
| 2-16 | 04418-617 | Emblem, Pull Point Indicator 12" | 2 |
| 2-17 | 04490-400-04 | Emblem, Danger Auger Entanglement | 2 |
| 2-18 | 04491-500-03 | Emblem, Warning Asphalt Burns | 2 |
| 2-24 | 04490-400-04 | Emblem, Danger Auger Entanglement | 2 |
| 2-25 | 04491-500-03 | Emblem, Warning Asphalt Burns | 2 |
| 2-26 | 04491-500-06 | Emblem, Warning Hopper Wing | 2 |
| 2-27 | 46010-600-08 | Reflector, Amber | 2 |
| 2-28 | 04494-104-85 | Emblem, Terex Cedarapids - Left hand | 1 |
| 2-29 | 04494-104-86 | Emblem, Terex Cedarapids - Right Hand | 1 |
| 2-35 | 04494-104-75 | Emblem, CR452 | 2 |
| 2-38 | 04493-017 | Emblem, Paver Tire Pressure | 2 |

TEREX
CEDARAPIDS

# Fenders

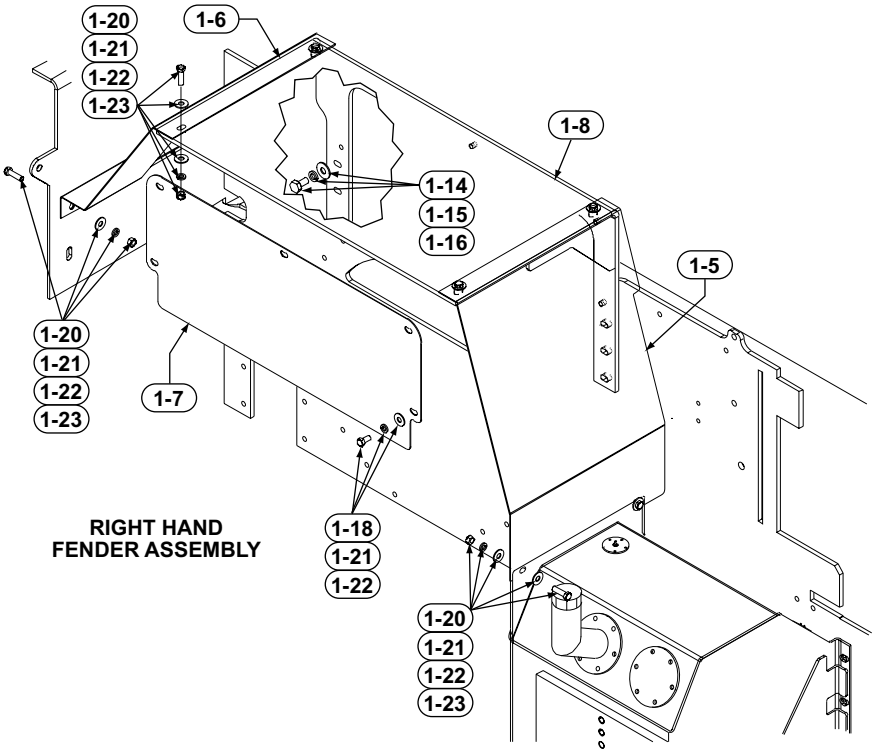


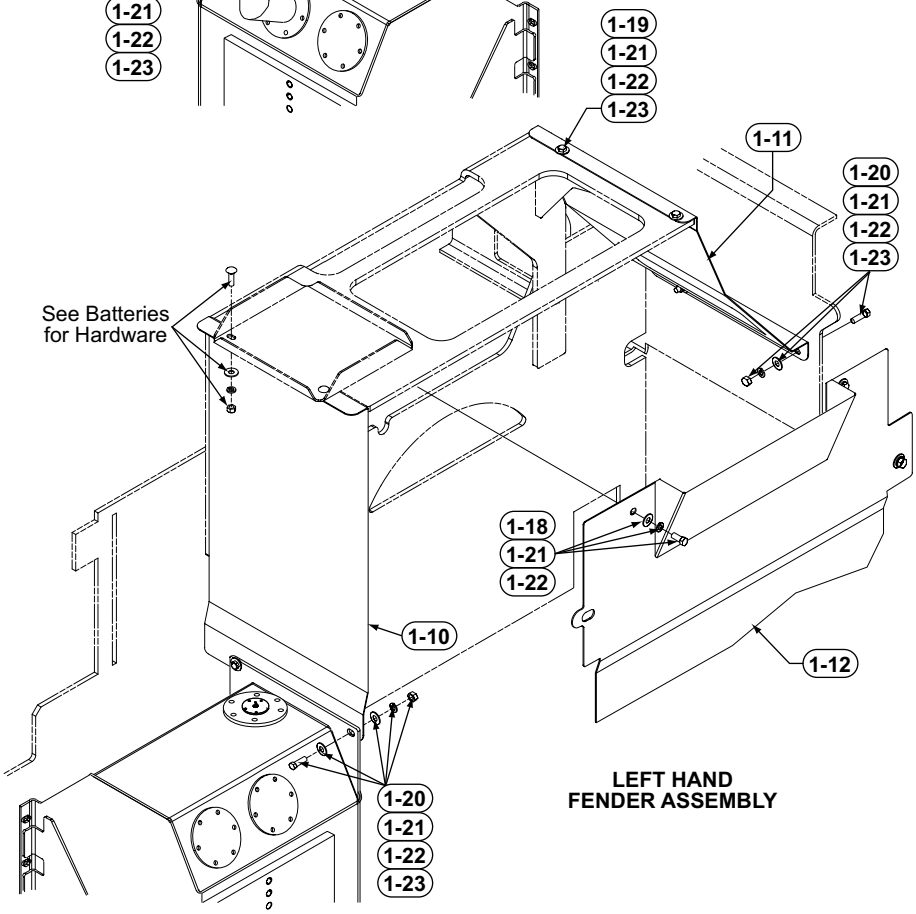

TEREX
CEDARAPIDS

## Fenders

Parts List No. 5210BJE

| Ref. No. | Part Number | Description | Quantity |
|---|---|---|---|
| 1-5 | 09704-014-82 | Fender, Right Hand Front | 1 |
| 1-6 | 09704-014-96 | Fender, Right Hand Rear | 1 |
| 1-7 | 09704-014-30 | Sheet, Right Hand Fender | 1 |
| 1-8 | 09704-014-27 | Support, Air Cleaner | 1 |
| 1-10 | 09704-014-31 | Fender, Left Hand Front | 1 |
| 1-11 | 09704-014-95 | Fender, Left Hand Rear | 1 |
| 1-12 | 09704-014-34 | Fender, Inside Panel | 1 |
| 1-13 | 09704-014-93 | Chute, Fender - Left Hand (Not shown on illustration) | 1 |
| 1-14 | 07383-100 | Capscrew, 5/8" NC x 1-1/2" | 6 |
| 1-15 | 07014-007 | Washer, 5/8" Lock | 6 |
| 1-16 | 07097-013 | Washer, 5/8" SAE | 6 |
| 1-18 | 07383-068 | Capscrew, 1/2" NC x 1" | 6 |
| 1-19 | 07383-070 | Capscrew, 1/2" NC x 1-1/2" | 3 |
| 1-20 | 07383-069 | Capscrew, 1/2" NC x 1-1/4" | 12 |
| 1-21 | 07014-020 | Washer, 1/2" | 36 |
| 1-22 | 07014-005 | Lockwasher, 1/2" | 20 |
| 1-23 | 07012-027 | Hex Nut, 1/2" NC | 14 |

Cedarapids
A Terex Company

## Flow Gates

Parts List No 05210ESF

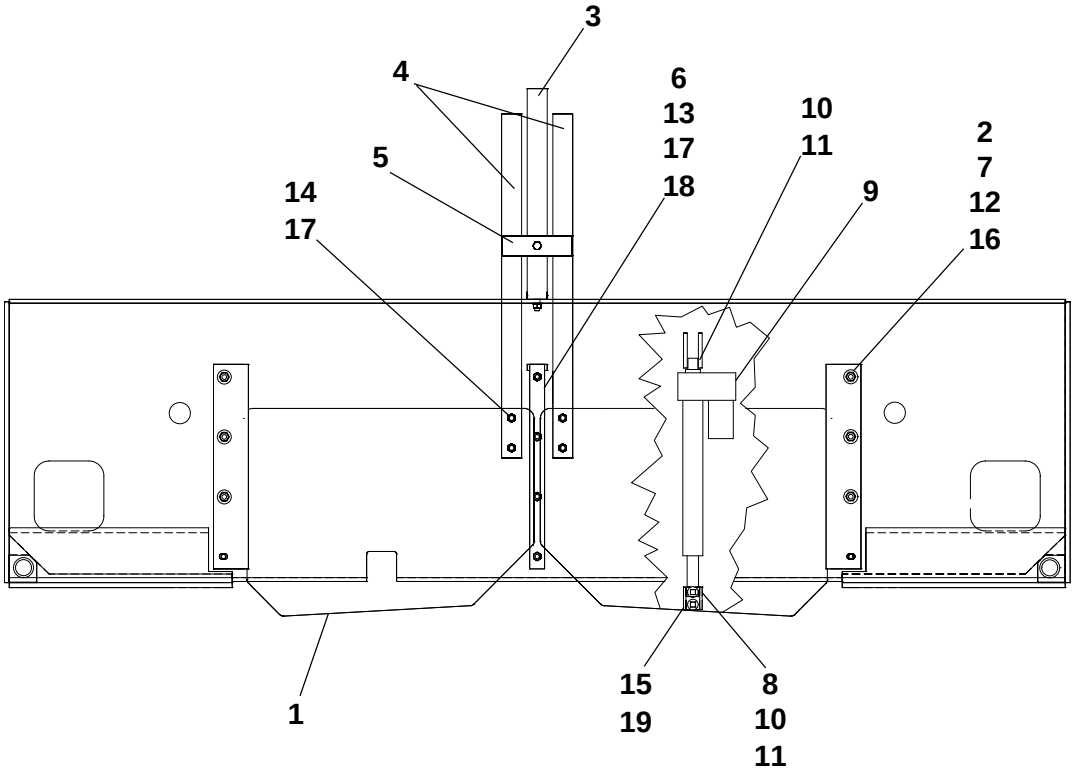


| Ref. No. | Part Number | Description | Quantity |
|---|---|---|---|
| 1 | 9704-007-61 | Gate, Hopper | 2 |
| 2 | 9704-007-85 | Clamp, Outer Gate | 2 |
| 3 | 9704-014-67 | Flat, Decal Mounting Bracket | 1 |
| 4 | 9704-014-66 | Flat, Hopper Gate Indicator | 2 |
| 5 | 9704-008-15 | Flat, Gate Indicator | 2 |
| 6 | 9704-001-19 | Clamp, Gate Center | 1 |
| 7 | 9701-574 | Shim, Clamp | 2 |
| 8 | 9704-006-55 | Clevis, Gate | 2 |
| 9 | 45500-758-24 | Jack, Actuator - Electric | 2 |
| 10 | 7198-008 | Pin, Yoke 1/2" | 4 |
| 11 | 7011-017 | Cotter Pin, 1/8" X 1" | 4 |
| 12 | 7383-070 | Capscrew, 1/2"NC x 1-1/2" | 8 |
| 13 | 7383-071 | Capscrew, 1/2"NC x 1-3/4" | 6 |
| 14 | 7383-068 | Capscrew, 1/2"NC x 1" | 4 |
| 15 | 7072-102 | Carriage Bolt, 1/2" NC x 1-1/2" | 4 |
| 16 | 7014-020 | Washer, 1/2" | 14 |
| 17 | 7014-005 | Washer, 1/2" Lock | 10 |
| 18 | 7012-027 | Hex Nut, 1/2" NC | 2 |
| 19 | 45890-102-28 | Locknut, 1/2" NC | 4 |

Note: Items 2, 6 & 7 may also be Supplied as a Kit using Part Number: 9709-000-01.

TEREX
CEDARAPIDS

## Main Frame Parts

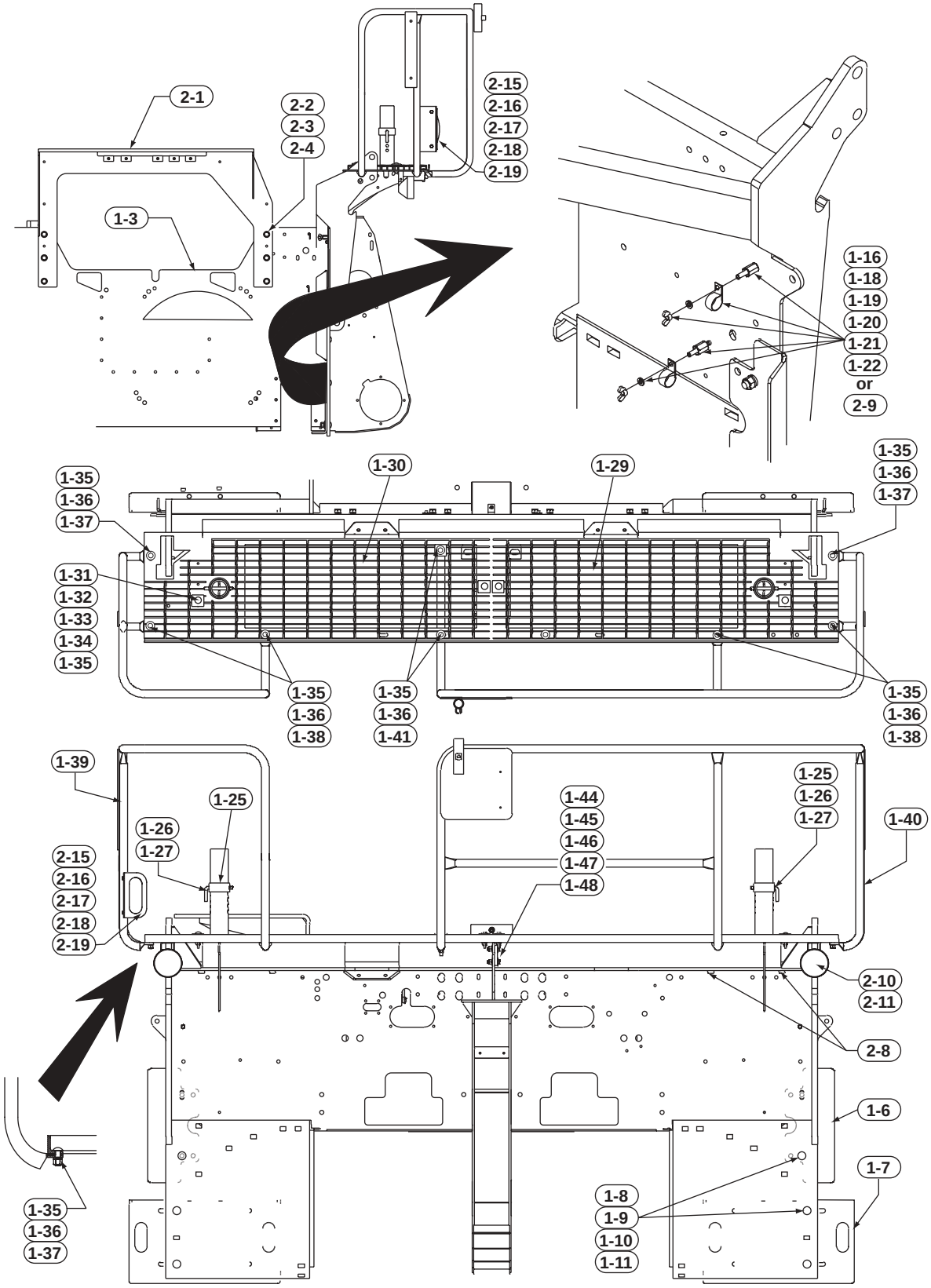

TEREX
CEDARAPIDS

## Main Frame Parts

Parts List No. 05234AAB

| Ref. No. | Part Number | Description | Quantity |
|---|---|---|---|
| 1-3 | Reference Only | See Frame Kit - Following Page | 1 |
| 1-6 | 9704-012-36 | Buffer Plate | 2 |
| 1-7 | 9704-012-94 | Plate, Retaining | 2 |
| 1-8 | 7072-149 | Carriage Bolt 5/8" NC x 2" | 8 |
| 1-9 | 7014-022 | Washer, 5/8" | 8 |
| 1-10 | 7014-007 | Washer, 5/8" Lock | 8 |
| 1-11 | 7012-029 | Hex Nut, 5/8" NC | 8 |
| 1-16 | 7014-003 | Lockwasher, 3/8" | 4 |
| 1-18 | 45890-252-29 | Capscrew, 3/8" NC x 2-1/2" | 4 |
| 1-19 | 7509-006 | Hose Clamp, 3/4" | 2 |
| 1-20 | 7056-011 | Wing Nut, 3/8" NC | 4 |
| 1-21 | 45890-100-50 | Nut, Coupling-3/8NC x 1/2N | 4 |
| 1-22 | 7509-007 | Hose Clamp, 13/16" | 2 |
| 1-25 | 9704-451-40 | Collar,Seat Height | 2 |
| 1-26 | 9704-451-41 | Pin, Seat | 2 |
| 1-27 | 45890-800-19 | Hair Pin, 1-7/8" | 2 |
| 1-29 | 9704-453-38 | Grating, R.H. | 1 |
| 1-30 | 9704-453-37 | Grating, L.H. | 1 |
| 1-31 | 9704-011-74 | Retainer, Grate | 4 |
| 1-32 | 7072-104 | Carriage Bolt, 1/2"x 2-1/2" | 4 |
| 1-33 | 7012-027 | Hex Nut, 1/2" | 4 |
| 1-34 | 7014-020 | Washer, 1/2" | 4 |
| 1-35 | 7014-005 | Lockwasher, 1/2" | 12 |
| 1-36 | 7012-027 | Hex Nut, 1/2" | 8 |
| 1-37 | 7072-101 | Carriage Bolt, 1/2" x 1-1/4" | 2 |
| 1-38 | 7383-069 | Capscrew, 1/2" x 1-1/4" | 4 |
| 1-39 | 9704-451-67 | Railing, Left Hand | 1 |
| 1-40 | 9704-453-58 | Railing, Right Hand | 1 |
| 1-41 | 7383-073 | Capscrew, 1/2" x 2-1/4" | 2 |
| 1-44 | 7383-071 | Capscrew, 1/2" x 1-3/4" | 4 |
| 1-45 | 7014-005 | Lockwasher, 1/2" | 4 |
| 1-46 | 7012-027 | Hex Nut, 1/2" | 4 |
| 1-47 | 9704-905-03 | Plate, Bearing | 1 |
| 1-48 | 7014-020 | Washer, 1/2" | 8 |
| 2-1 | 9704-013-80 | Support, Electrical Box | 1 |
| 2-2 | 7383-100 | Capscrew, 5/8" x 1-1/2" | 6 |
| 2-3 | 7014-007 | Lockwasher, 5/8" | 6 |
| 2-4 | 7014-022 | Washer, 5/8" Flat | 6 |
| 2-8 | 46320-001-21 | Clip, Harness | 4 |
| 2-9 | 7509-009 | Hose Clamp, 1-1/8" | 2 |
| 2-10 | 46320-001-06 | Strap | 6 |
| 2-11 | 46270-252-12 | Light, Tail | 2 |
| 2-15 | 46270-253-22 | Light, Tail W/Connector | 1 |
| 2-16 | 46270-250-06 | Bracket, Mounting - Tail Light | 1 |
| 2-17 | 7383-020 | Capscrew, 5/16" NC x 3/4" | 2 |
| 2-18 | 7014-002 | Washer, 5/16" Lock | 2 |
| 2-19 | 7012-024 | Hex Nut, 5/16" NC | 2 |

TEREX
CEDARAPIDS

## Frame, Hood & Hopper Kit

NOTE: The items shown are ordered by the factory as a kit for assembly purposes. They are identical to parts that may be listed on the individual component parts pages. Typical illustration is shown. Appearance and quantity of some items may vary depending on model.

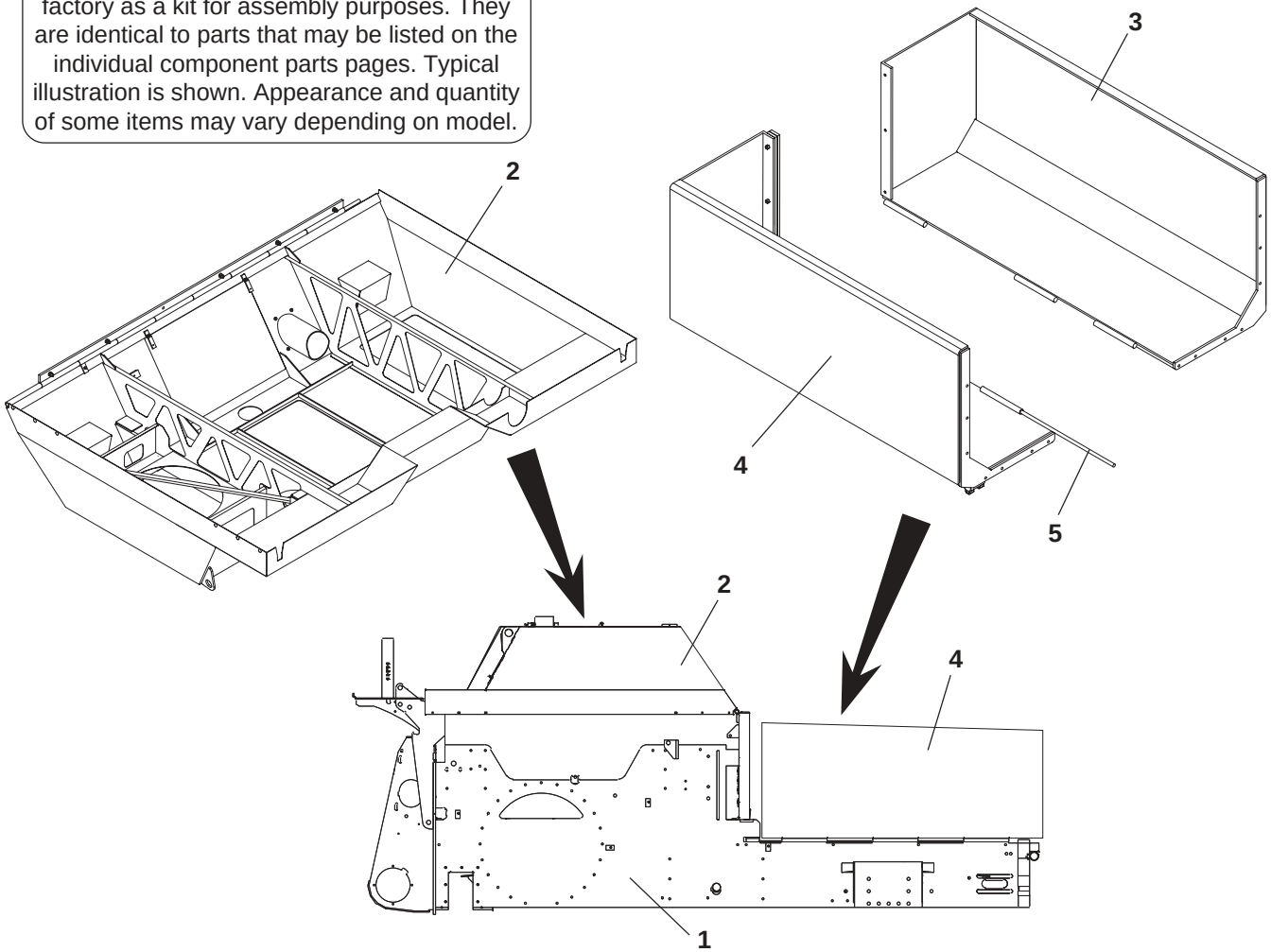


| Ref. No. | Part Number | Description | Quantity |
|---|---|---|---|
| - | 9704-016-44 | Main Frame Kit - 400 Series Pavers | - |
| 1 | 9704-016-42 | Frame, Main (Tab & Slot) - 400 Series Pavers | 1 |
| 2 | 9704-322-38 | Hood, 400/500 Series Pavers | 1 |
| 3 | 9704-013-57 | Hopper Wing, Left Hand - All 400 Series Pavers | 1 |
| 4 | 9704-013-56 | Hopper Wing, Right Hand - All 400 Series Pavers | 1 |
| 5 | 9704-013-63 | Hinge Rod, 3/4" Hopper Wing | 2 |
| | | **NOTE: PARTS LISTED BELOW ARE NOT ILLUSTRATED** | |
| 6 | 9704-007-86 | Door, Basket | 1 |
| 7 | 7383-068 | Capscrew, 1/2" NC x 1" | 6 |
| 8 | 7014-005 | Washer, 1/2" Lock | 6 |
| 9 | 7014-020 | Washer, 1/2" Flat | 6 |
| 10 | 9704-201-65-01 | Liner, Curved | 2 |
| 11 | 9704-201-65-03 | Liner, Flat | 28 |
| 12 | 7389-045 | Capscrew, 1/2" NC x 1-1/4" | 62 |
| 13 | 45890-102-28 | Nut, 1/2" NC Gripco | 62 |

TEREX
CEDARAPIDS

## Hood w/Charge Air Cooler

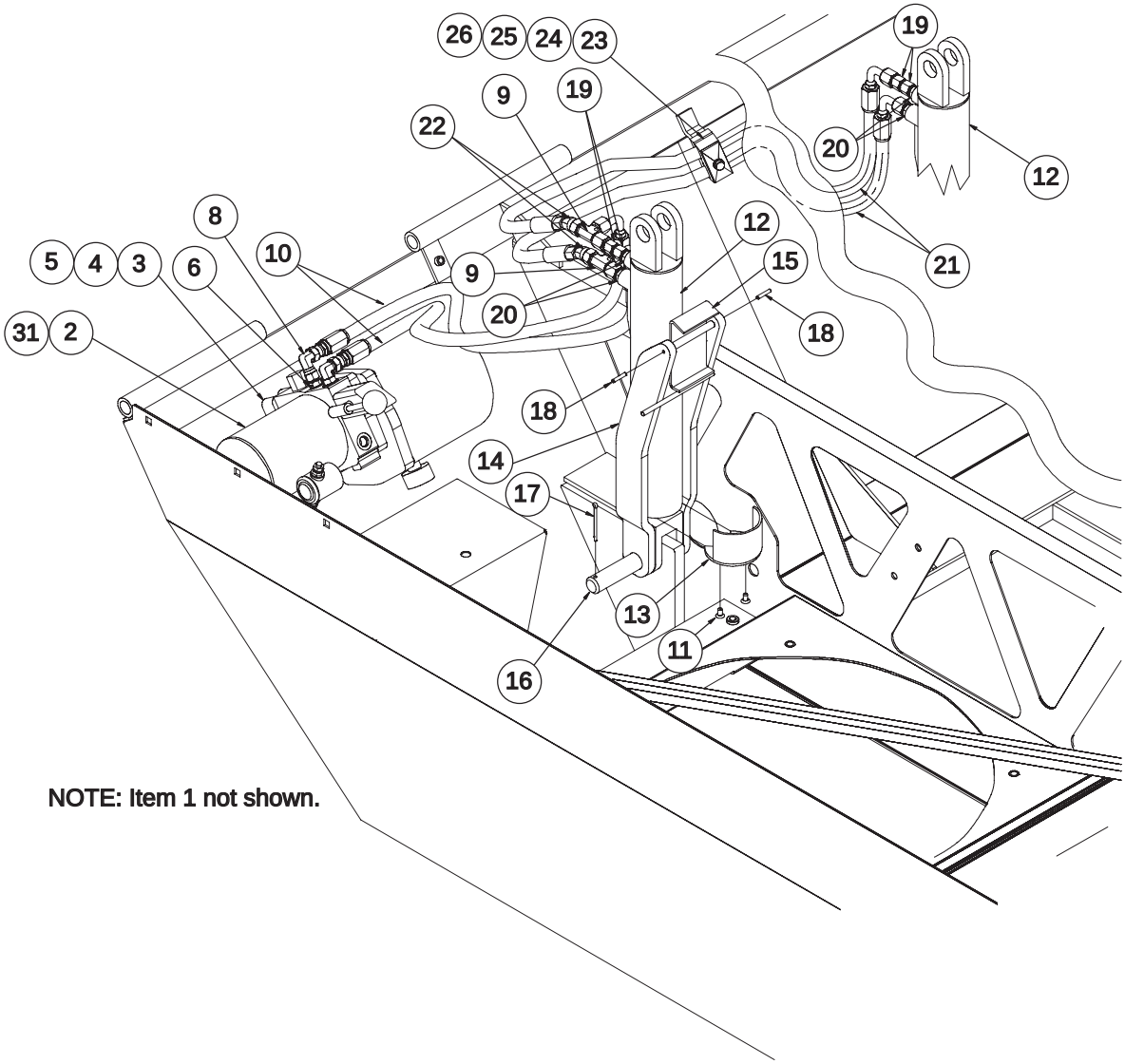


NOTE: Item 1 not shown.

TEREX
CEDARAPIDS

## Hood w/Charge Air Cooler

### SUPERCHARGE FILTER - HARDWARE MTG.

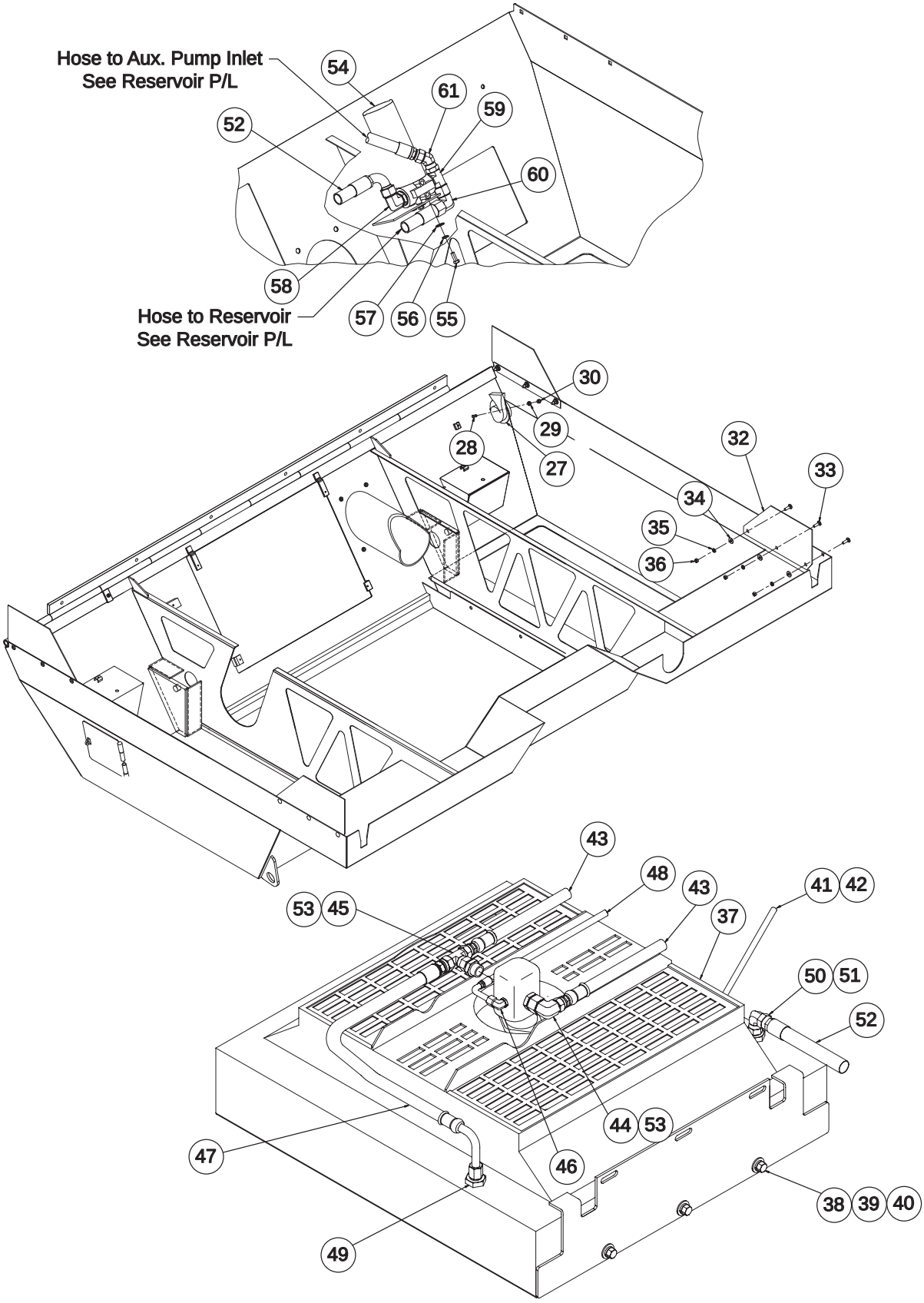

TEREX
CEDARAPIDS

## Hood w/Charge Air Cooler

Parts List No. 05234HAA

| Ref # | Part Number | REV | Part Name | Description | Qty |
|---|---|---|---|---|---|
| | 0970432238 | | HOOD | | 1 |
| | 0970830023 | | SUB-ASSEMBLY | HOOD | 1 |
| 1 | 0970450601 | B | KIT | ACOUSTIC MATERIAL | 1 |
| 2 | 4508000181 | A | HYD UNIT | POWER PAK. | 1 |
| 3 | 07383041 | | CAPSCREW | 3/8"NC X 1-3/4" | 2 |
| 4 | 07014003 | | WASHER | 3/8" LOCK | 2 |
| 5 | 0970431529 | A | BLOCK | SPACER | 1 |
| 6 | 07430416 | | CONNECTOR | 3/8"JIC X 1/4"S | 1 |
| 7 | 07430275 | | ELBOW | #6SAEM X #6JICM 90D | 1 |
| 8 | 07430383 | | ELBOW | 3/8" SWIVEL NUT | 1 |
| 9 | 07430344 | | TEE | 3/8"JIC SWIVEL NUT | 2 |
| 10 | 0765102735 | A | HOSE ASSY | 3/8" ID X 27" | 2 |
| 11 | 07389002 | | CAPSCREW | SCH 1/4NC X1/2 | 2 |
| 12 | 4509000785 | - | H CYLINDER | 2.5"BORE X 12" | 2 |
| 13 | 0970431643 | A | TRIP | CYLINDER HOOD LATCH | 1 |
| 14 | 0970431797 | B | FRAME | HOOD LATCH | 1 |
| 15 | 0970431237 | F | RELEASE | HOOD LATCH | 1 |
| 16 | 0970431249 | C | PIN | CYLINDER | 1 |
| 17 | 07011066 | | COTTER PIN | 5/32" X 2" | 2 |
| 18 | 07238087 | | ROLL PIN | 3/16" X 1" | 2 |
| 19 | 4525901203 | A | FITTING | ORIFICE 5/64" DIA | 4 |
| 20 | 07430252 | | CONNECTOR | #6SAEM X #6JICM | 4 |
| 21 | 076500823501 | A | HOSE ASSY | | 2 |
| 22 | 07430426 | | ELBOW | #6 X 45 SWIVEL | 2 |
| 23 | 4508052923 | - | CLAMP HALF | FOR 1/2" TUBE | 4 |
| 24 | 4508052926 | - | PLATE | COVER FOR CLAMP | 2 |
| 25 | 07383024 | | CAPSCREW | 5/16"NC X 1-1/2 | 2 |
| 26 | 07014002 | | WASHER | 5/16" LOCK | 2 |
| 27 | 4601000112 | B | HORN | 12VAC | 1 |
| 28 | 07383038 | | CAPSCREW | 3/8" NC X 1" | 1 |
| 29 | 07014003 | | WASHER | 3/8" LOCK | 1 |
| 30 | 07012025 | | HEX NUT | 3/8" NC | 1 |
| 31 | 0970441032 | C | WIRE | GROUND (HOOD RAISE) | 1 |
| 32 | 0970431288 | E | HOOD | EXTENSION LH | 4 |
| 33 | 07072051 | | CARR BOLT | 3/8"NC X 3/4" | 12 |
| 34 | 07014018 | | WASHER | 3/8" | 12 |
| 35 | 07014003 | | WASHER | 3/8" LOCK | 12 |
| 36 | 07012025 | | HEX NUT | 3/8" NC | 12 |
| 37 | 4590500916 | | COOLER | ENGINE | 1 |
| 38 | 07383069 | | CAPSCREW | 1/2"NC X 1-1/4" | 6 |
| 39 | 07014020 | | WASHER | 1/2" | 6 |
| 40 | 07014005 | | WASHER | 1/2" LOCK | 6 |

TEREX
CEDARAPIDS

## Hood w/Charge Air Cooler

Parts List No. 05234HAA

| Ref # | Part Number | REV | Part Name | Description | Qty |
|---|---|---|---|---|---|
| 41 | 5003000131 | - | HOSE | FUEL LINE SAE30R7 | 6' |
| 42 | 4519100475 | A | CLAMP | 5/8" MAX HOSE | 1 |
| 43 | 0766305335 | - | HOSE ASSY | 3/4" ID X 53" | 2 |
| 44 | 07430387 | | ELBOW | 3/4" SWIVEL NUT | 1 |
| 45 | 07430358 | | TEE | 3/4"JIC SWIVEL NUT | 1 |
| 46 | 07430275 | | ELBOW | #6SAEM X #6JICM 90D | 1 |
| 47 | 0765303438 | B | HOSE ASSY | 3/4" ID X 34" | 1 |
| 48 | 0765106738 | A | HOSE ASSY | 3/8" ID X 67" | 1 |
| 49 | 07430264 | | CONNECTOR | 1-5/16"SAE 3/4" | 1 |
| 50 | 07430267 | | CONNECTOR | #16SAE #16JIC | 1 |
| 51 | 07430406 | | ELBOW | 1" SWIVEL | 1 |
| 52 | 0763402635 | - | HOSE ASSY | 1" ID X 26" | 1 |
| 53 | 07430263 | | CONNECTOR | 1-1/16"SE 3/4"J | 2 |
| 54 | 4517500141 | A | FILTER | SPIN ON | 1 |
| 55 | 07383038 | | CAPSCREW | 3/8" NC X 1" | 4 |
| 56 | 07014003 | | WASHER | 3/8" LOCK | 4 |
| 57 | 07014018 | | WASHER | 3/8" | 4 |
| 58 | 07430285 | | ELBOW | #16SAE #16JIC | 1 |
| 59 | 07430307 | | TEE | 1" | 1 |
| 60 | 07430406 | | ELBOW | 1" SWIVEL | 1 |
| 61 | 07430429 | | ELBOW | 1" SWIVEL | 1 |

TEREX
CEDARAPIDS

## Hopper Wings

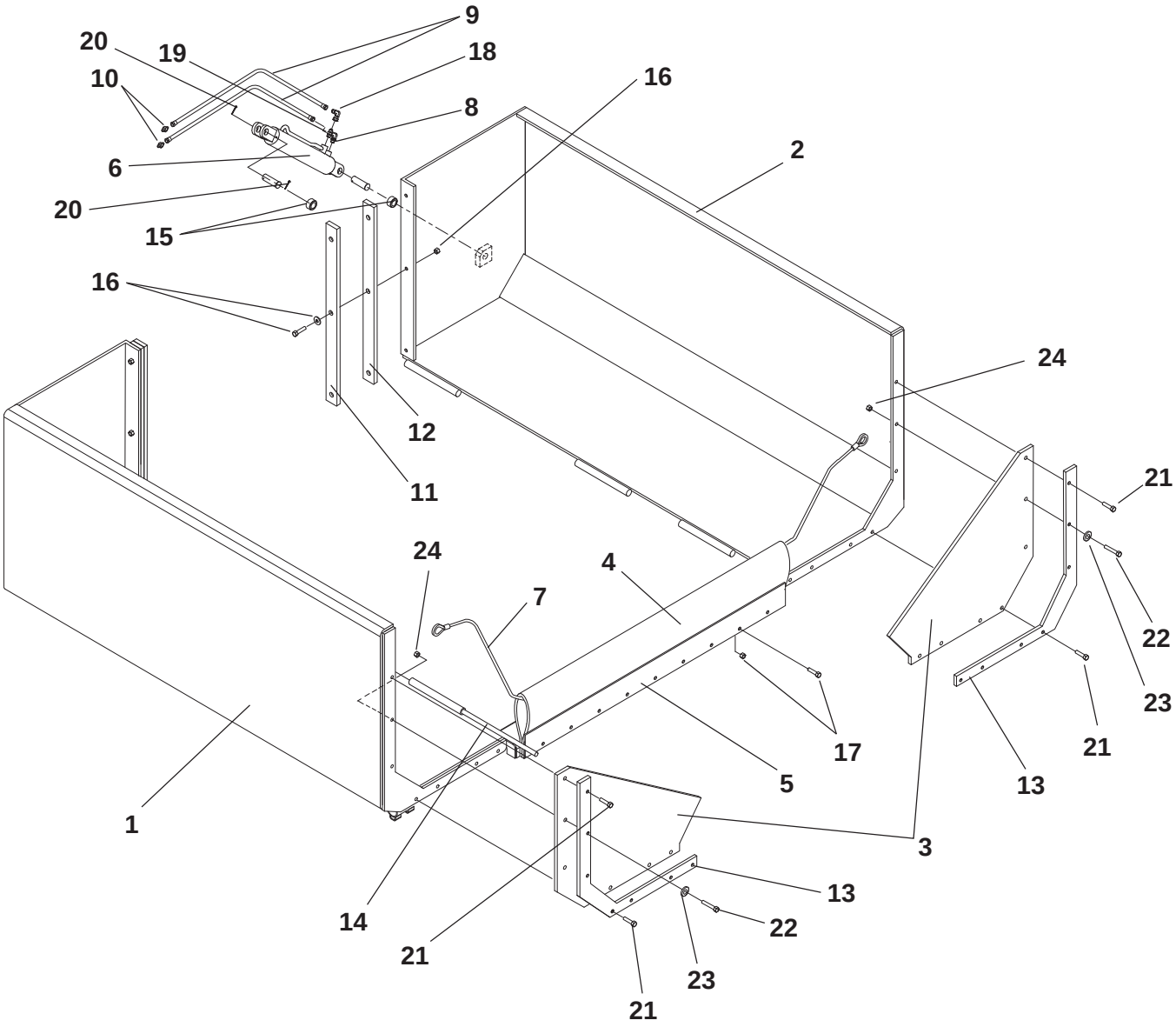

TEREX
CEDARAPIDS

## Hopper Wings

Parts List No. 05234AGB

| Ref. No. | Part Number | Description | Quantity |
|---|---|---|---|
| 1 | 9704-013-56 | Wing, Right Hand Hopper | 1 |
| 2 | 9704-013-57 | Wing, Left Hand Hopper | 1 |
| 3 | Reference | Guard, Corner - See Miscellaneous Paver Parts | - |
| 4 | 9704-010-85 | Flashing, Front Lip | 1 |
| 5 | 9704-009-15 | Flat, Flashing Clamp | 1 |
| 6 | 45090-010-50 | *Cylinder, Hydraulic | 2 |
| | 45090-010-50-01 | Seal Kit (For above cylinder) | As Req |
| 7 | Reference Only | Cable - See Miscellaneous Paver Parts | - |
| 8 | 7430-275 | Elbow, 90° 3/8" - with O-Ring | 4 |
| | 45259-508-13 | O-Ring (For above fitting) | As Req |
| 9 | 7651-021-33-01 | Hose Assembly, Hopper Cylinder | 4 |
| 10 | 7430-385 | Fitting, 1/2" Bulkhead | 2 |
| 11 | 9704-010-15 | Clamp, Seal | 2 |
| 12 | 9704-010-18 | Wiper, Seal | 2 |
| 13 | Reference Only | Clamp, Guard - See Miscellaneous Paver Parts | - |
| 14 | 9704-013-65 | Rod, Hinge | 2 |
| 15 | 45134-011-01 | Bushing, 1" | 4 |
| 16 | 7383-070 | Capscrew, 1/2" NC x 1-1/2" | 4 |
| | 7014-020 | Washer, 1/2" | 4 |
| 17 | 7383-072 | Capscrew, 1/2" NC x 2" | 9 |
| | 45890-102-28 | Locknut, 1/2" NC | 9 |
| 18 | 7430-252 | Connector | 2 |
| 19 | 7430-383 | Elbow, 90° 3/8" Swivel Nut | 2 |
| 20 | 7011-066 | Cotter Pin | 8 |
| 20 | Reference Only | Carriage Bolt - See Miscellaneous Paver Parts | - |
| 21 | Reference Only | Carriage Bolt - See Miscellaneous Paver Parts | - |
| 22 | Reference Only | Washer - See Miscellaneous Paver Parts | - |
| 23 | Reference Only | Locknut - See Miscellaneous Paver Parts | - |

*NOTE: Pins are furnished with cylinder.

Cedarapids
A Terex Company

## Miscellaneous Paver Parts

Parts List No. 5032KAW

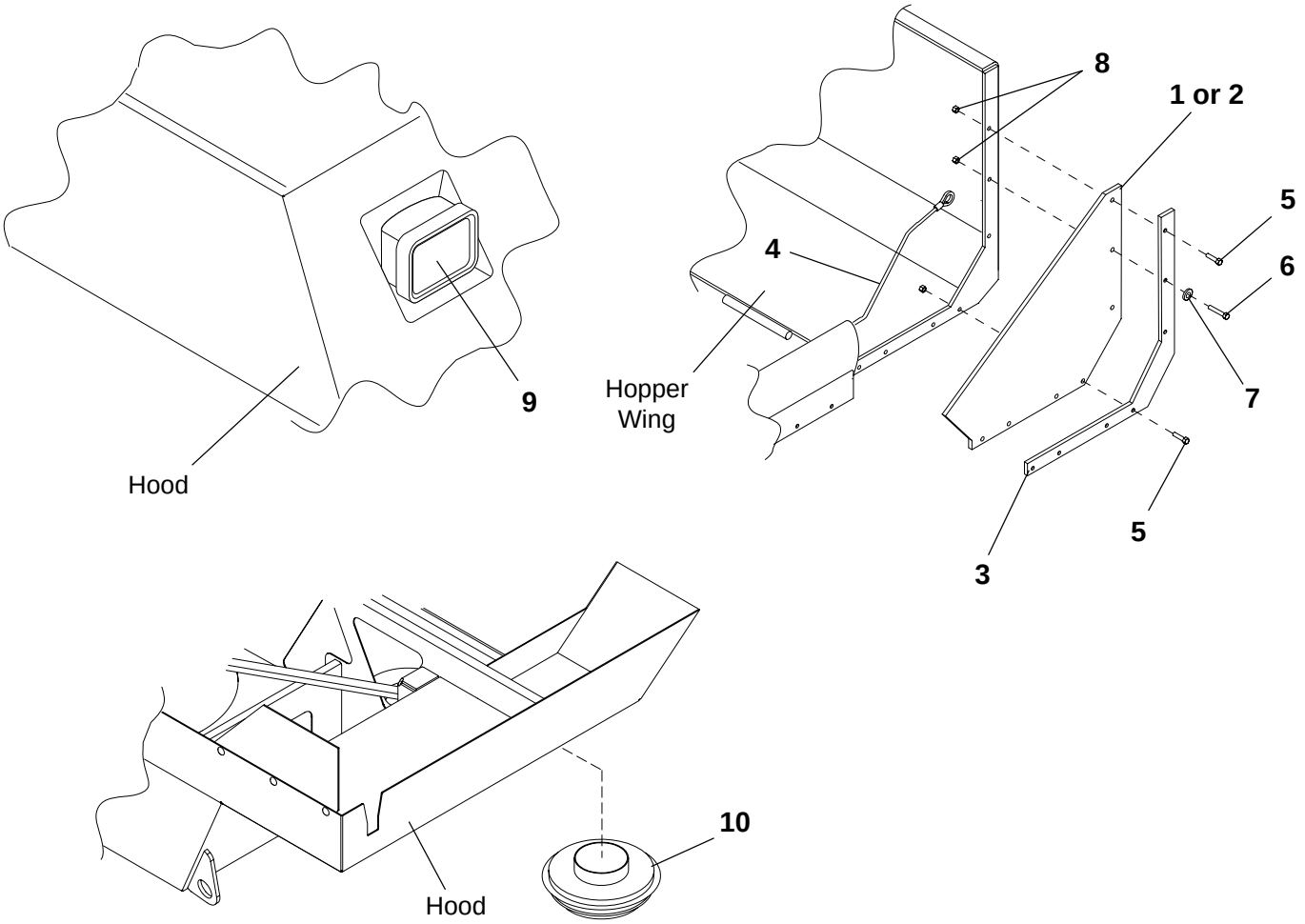


| Ref. No. | Part Number | Description | Quantity |
|---|---|---|---|
| 1 | 9704-009-92 | Guard, Corner (Only supplied on Slat Models) | 2 |
| 2 | 9704-013-39 | Guard, Corner (Only supplied on Remix Models) | 2 |
| 3 | 9704-010-27 | Clamp, Guard | 2 |
| 4 | 9704-007-26 | Cable, Hopper - 118" (Only supplied on Slat Models) | 1 |
| 5 | 7072-103 | Carriage Bolt, 1/2" NC x 2" | 12 |
| 6 | 7072-105 | Carriage Bolt, 1/2" NC x 3" | 2 |
| 7 | 9700-459 | Washer (Only supplied on Slat Models) | 2 |
| 8 | 45890-102-28 | Locknut, 1/2" NC | 14 |
| 9 | 46270-005-08 | Light, Utility - 12.8V | 2 |
| 10 | 45690-001-32-04 | Air Cleaner, Hood Inlet | 1 |
| 11 | 41733-003-01 | Gasket, 1" x 3/8" (Not Shown on Illustration) | 14' |
| 12 | 9704-318-37 | Grill, Radiator (Not Shown on Illustration) | 1 |
| | The following item is not supplied on all units - Not Shown on Illustration | | |
| 13 | 45710-003-09 | Stack, Exhaust 6" x 36" (5032KAW & 5032KAX Only) | 1 |

TEREX
CEDARAPIDS

## Operators Seat

Parts List No. 05032KGC or 5032KGD

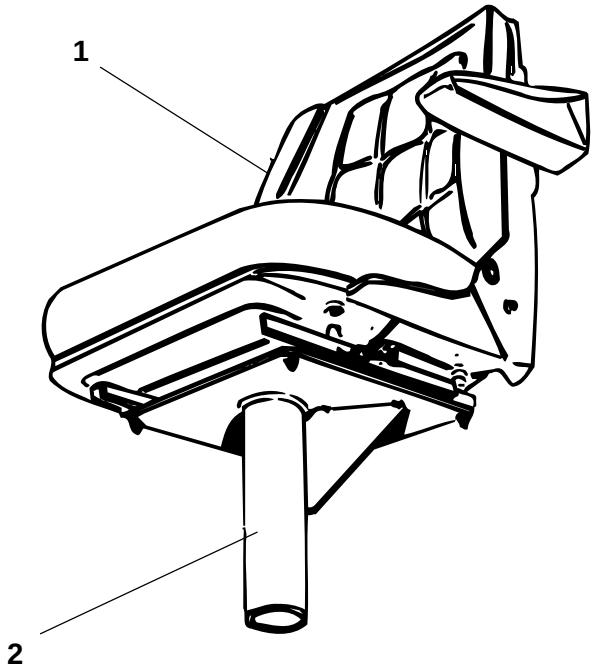


| Ref. No. | Part Number | Description | Quantity |
|---|---|---|---|
| 1 | 45037-001-12 | Seat, Operators (Complete) | As Req |
| 2 | 9704-451-38 | Pedestal, Seat | As Req |
| | Seat Mounting Hardware - Not Identified on Illustration | | |
| 3 | 7014-002 | Lockwasher, 5/16" | As Req |
| 4 | 7012-024 | Hex Nut, 5/16" | As Req |
| 5 | 7014-017 | Washer, 5/16" Flat | As Req |

Cedarapids
A Terex Company

## Umbrella

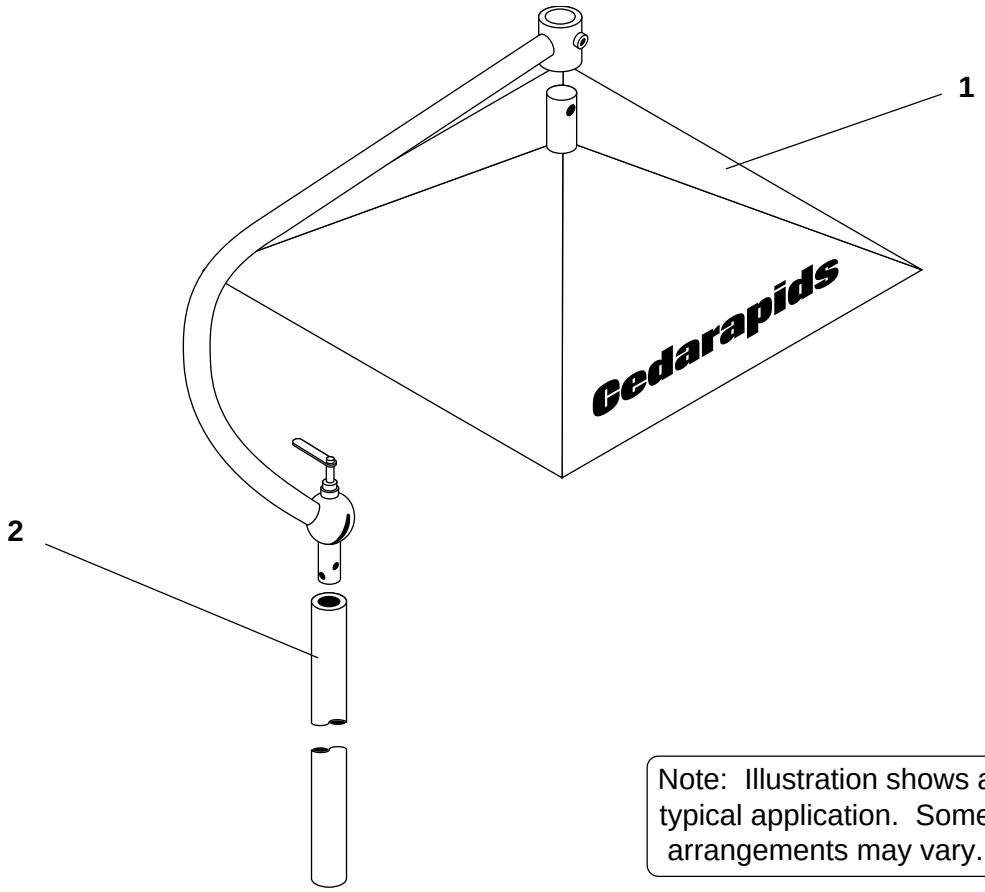


Note: Illustration shows a typical application. Some arrangements may vary.

| Ref. No. | Part Number | Description | Quantity |
|---|---|---|---|
| 1 | 9704-951-19 | Umbrella - Assembly | 1 |
| 2 | 7383-068 | Capscrew, 1/2" NC x 1" | 4 |
| | 7012-027 | Nut, Hex 1/2" NC | 4 |
| | 7014-005 | Lockwasher | 4 |
| 3 | * 5036VK03 | Bracket, Umbrella *(Not Shown)* | 1 |

* Item 3 is used on Eng Bom 05046YUB only. And applies to older Pavers.

TEREX
CEDARAPIDS

## Oscillating Push Beam Spacer Assembly

09704-952-88

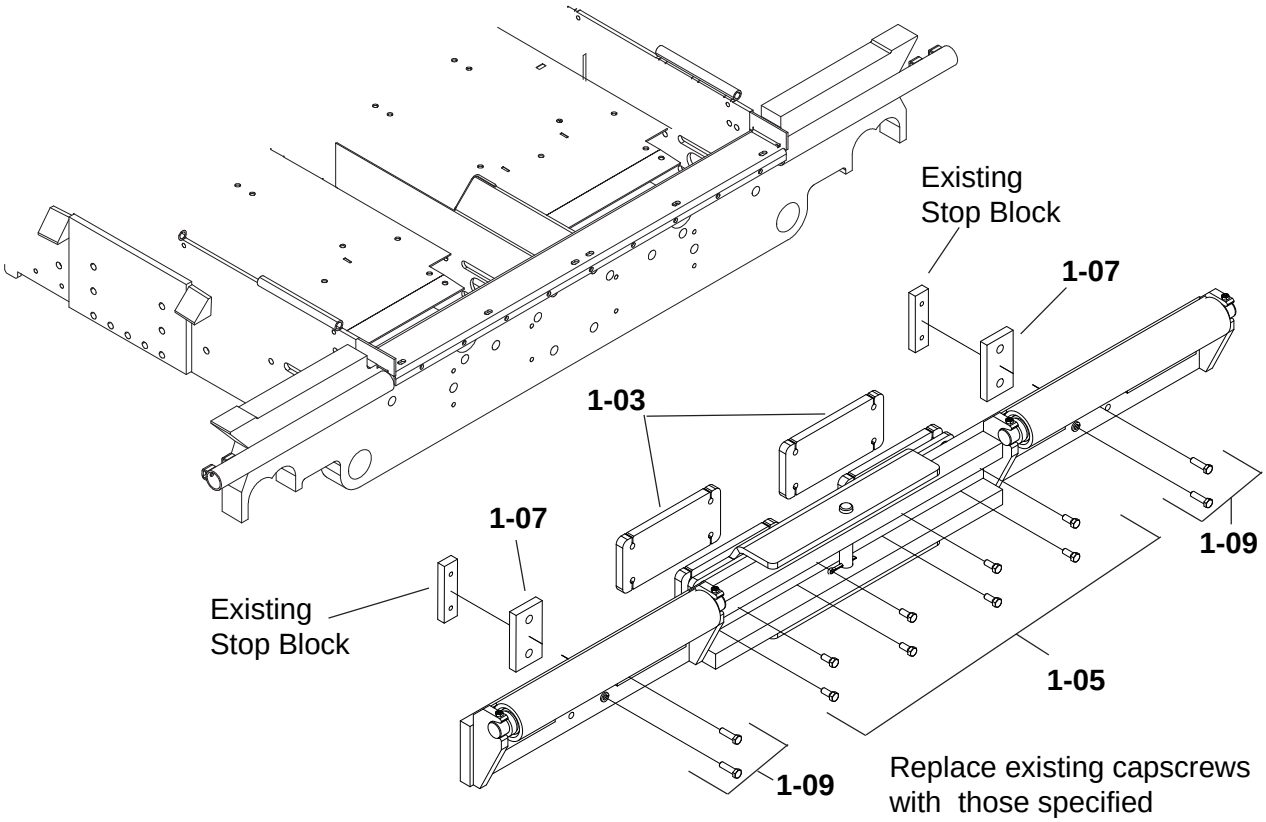


| Ref. No. | Part Number | Description | Quantity |
|---|---|---|---|
| 1-03 | 0970485130 | Plate, Spacer | 2 |
| 1-05 | 07383104 | Capscrew, 5/8" NC x 2-1/2" | 8 |
| 1-07 | 0970495281 | Block, Spacer | 2 |
| 1-09 | 07383103 | Capscrew, 5/8" NC x 2-1/4" | 4 |

TEREX
CEDARAPIDS

## Oscillating Push Roller Assembly

09704-952-80

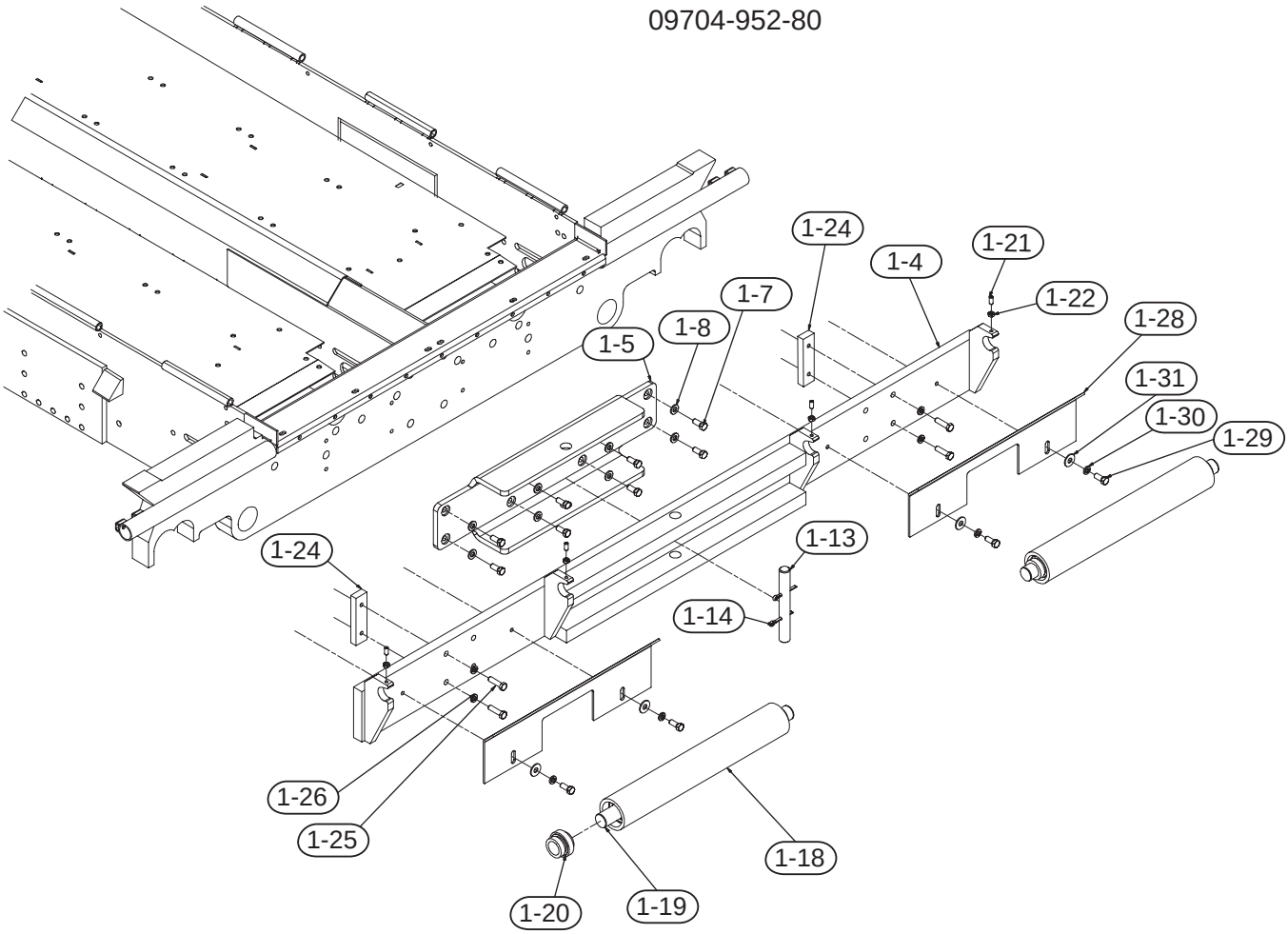


| Ref # | Part Number | REV | Part Name | Description | Qty |
|---|---|---|---|---|---|
| 1-1 | 0970495280 | | ASSEMBLY | PUSH ROLLER | REF |
| 1-4 | 0970495277 | A | BEAM | OSCILLATING BEAM | 1 |
| 1-5 | 0970485157 | | MOUNT | OSCILLATING | 1 |
| 1-7 | 07383100 | | CAPSCREW | 5/8" NC X 1-1/2" | 8 |
| 1-8 | 07465002 | | WASHER | 5/8" HARDENED FLAT | 8 |
| 1-13 | 0970400374 | B | PIN | OSC BEAM | 1 |
| 1-14 | 07011113 | | COTTER PIN | 3/8" X 3" | 2 |
| 1-18 | 05036AD32 | E | TUBE | ROLLER | 2 |
| 1-19 | 0970495259 | A | SHAFT | PUSH-ROLLER | 2 |
| 1-20 | 07302013 | | BALL BRG | 1-15/16"BORE | 4 |
| 1-21 | 07130105 | | SET SCREW | 1/2"NC X 1-1/4" | 4 |
| 1-22 | 07017027 | | HEX NUT | 1/2" NC JAM | 4 |
| 1-24 | 0970495279 | | BLOCK | OSCILLATION STOP | 2 |
| 1-25 | 07383103 | | CAPSCREW | 5/8"NC X 2-1/4 | 4 |
| 1-26 | 07014007 | | WASHER | 5/8" LOCK | 4 |
| 1-28 | 0970495282 | | SCRAPER | PUSH ROLLER | 2 |
| 1-29 | 07383100 | | CAPSCREW | 5/8" NC X 1-1/2" | 4 |
| 1-30 | 07014007 | | WASHER | 5/8" LOCK | 4 |
| 1-31 | 07014022 | | WASHER | 5/8" | 4 |

TEREX
CEDARAPIDS

## Generator Hydraulic Components

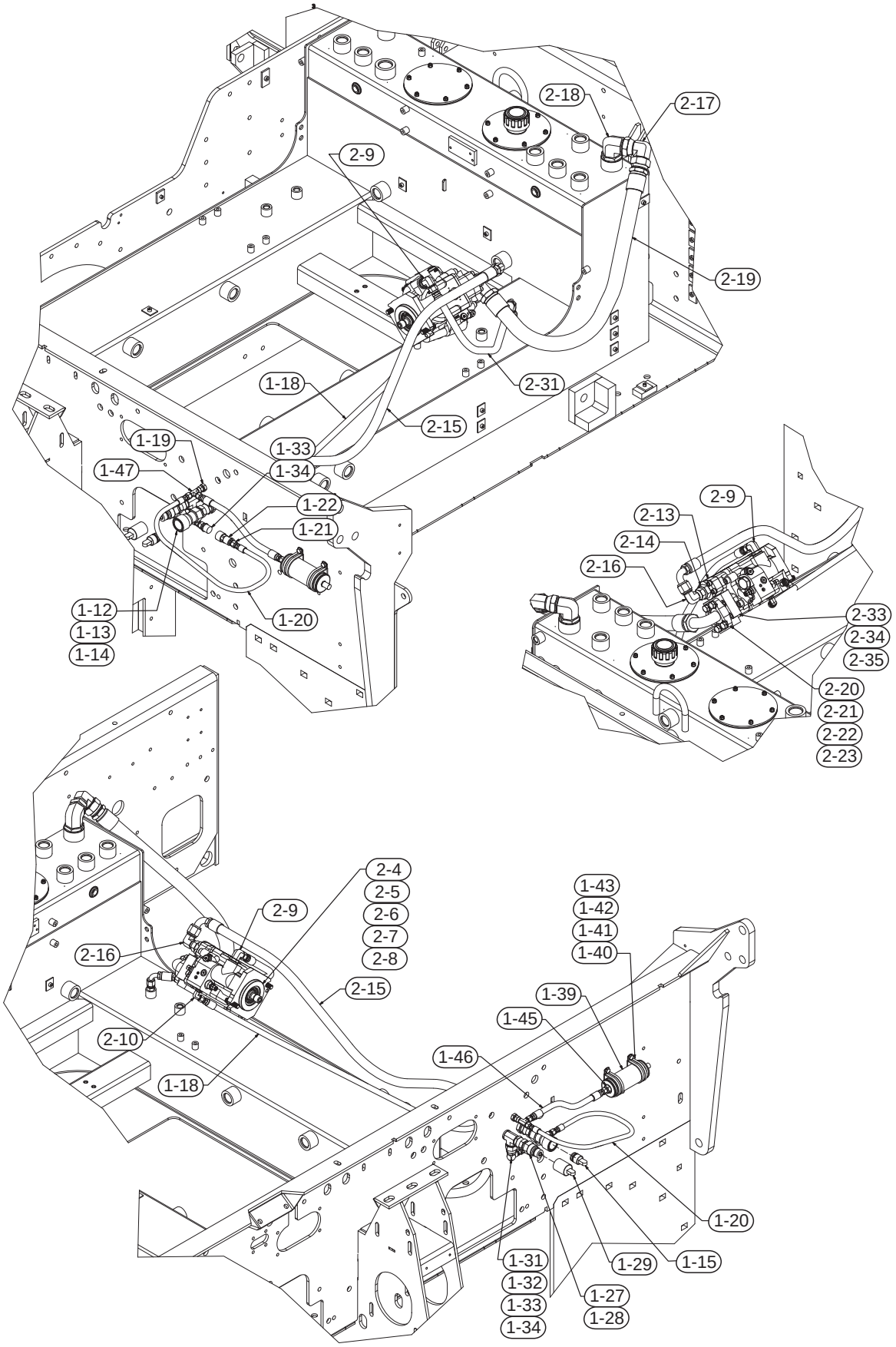

TEREX
CEDARAPIDS

## Generator Hydraulic Components

Parts List No 05237RTC

| Ref # | Part Number | REV | Part Name | Description | Qty |
|---|---|---|---|---|---|
| | 0970466407 | - | ASSEMBLY DRAWING | GENERATOR PUMP | REF |
| 1-12 | 07430369 | | UNION | 3/4"JIC BULKHEAD | 1 |
| 1-13 | 07430435 | | CONNECTOR | 3/4"MPT X 3/4"J | 1 |
| 1-14 | 4519150431 | A | COUPLER | FEMALE 3/4"FPT | 1 |
| 1-15 | 4519150603 | - | DUST PLUG | 3/4" QD | 1 |
| 1-18 | 076600543301 | - | HOSE ASSEMBLY | | 1 |
| 1-19 | 07430366 | | UNION | 3/8"JIC BULKHD | 1 |
| 1-20 | 076600543301 | - | HOSE | 100R2 X 54" | 1 |
| 1-21 | 07430004 | | CONNECTOR | 1/4"P X #6 JIC | 1 |
| 1-22 | 451915041401 | A | COUPLER | 1/4"QD | 1 |
| 1-27 | 07430435 | | CONNECTOR | 3/4"MPT X 3/4"J | 1 |
| 1-28 | 4519150430 | A | COUPLER | MALE 3/4"FPT | 1 |
| 1-29 | 4519150504 | - | DUST CAP | 3/4" QD | 1 |
| 1-31 | 4572077643 | - | ADAPTER | 90DEG. #12JIC | 1 |
| 1-32 | 4572077021 | - | NIPPLE | 1/4" X 1/4" | 1 |
| 1-33 | 451915041402 | A | NIPPLE | COUPLING | 1 |
| 1-34 | 451915041404 | - | CAP | 1/4" | 1 |
| 1-39 | 4508550218 | - | ACUMULATOR | PISTON | 1 |
| 1-40 | 4519100448 | A | CLAMP | TIE DOWN | 2 |
| 1-41 | 07383039 | | CAPSCREW | 3/8"NC X 1-1/4 | 2 |
| 1-42 | 07014003 | | WASHER | 3/8" LOCK | 2 |
| 1-43 | 07012025 | | HEX NUT | 3/8" NC | 2 |
| 1-45 | 07430253 | | CONNECTOR | 3/4"SAE 3/8"JIC | 1 |
| 1-46 | 0766101433 | - | HOSE ASSEMBLY | 3/8" JIC X 14" | 1 |
| 1-47 | 07430344 | | TEE | 3/8"JIC SWIVEL NUT | 1 |
| 2-4 | 4508000281 | - | HYDRAULIC PUMP | | 1 |
| 2-5 | 4524012565 | - | O RING | 3.739"ID X .070"WA | 1 |
| 2-6 | 4589026009 | - | FLANGE BOLT | 12PT 1/2NCX1-1/2 | 2 |
| 2-7 | 07014005 | | WASHER | 1/2" LOCK | 2 |
| 2-8 | 4589030117 | - | WASHER | 12MM HARDENED FLAT | 2 |
| 2-9 | 07430279 | | ELBOW | #10SAE #8JIC | 1 |
| 2-10 | 07430417 | | ELBOW | 7/16"SAE 3/8"JIC | 1 |
| 2-13 | 4519100496 | A | FLANGE KIT | | 1 |
| 2-14 | 07430264 | | CONNECTOR | 1-5/16"SAE 3/4" | 1 |
| 2-15 | 0767305635 | - | HOSE ASSEMBLY | 3/4" ID X 56" | 1 |
| 2-16 | 07430387 | - | ELBOW | | 1 |
| 2-17 | 07430465 | - | ELBOW | | 1 |
| 2-18 | 07430453 | | ELBOW | | 1 |
| 2-19 | 076350363701 | - | HOSE ASSEMBLY | | 1 |
| 2-20 | 4525950868 | - | O RING | 1.859"ID | 1 |
| 2-21 | 4519100493 | - | FLANGE | HALF 1-1/2" | 2 |
| 2-22 | 07383070 | | CAPSCREW | 1/2"NC X 1-1/2 | 4 |
| 2-23 | 07014005 | | WASHER | 1/2" LOCK | 4 |
| 2-31 | 0765202433 | A | HOSE ASSEMBLY | 1/2" ID X 24" | 1 |
| 2-33 | 0970432242 | C | ADAPTER | GENERATOR PUMP | 1 |
| 2-34 | 4525950865 | - | O RING | 2.234"ID | 1 |
| 2-35 | 07025021 | | CAPSCREW | SCH1/2NCX1-1/4 | 4 |

TEREX
CEDARAPIDS

## Screed Pull Arms

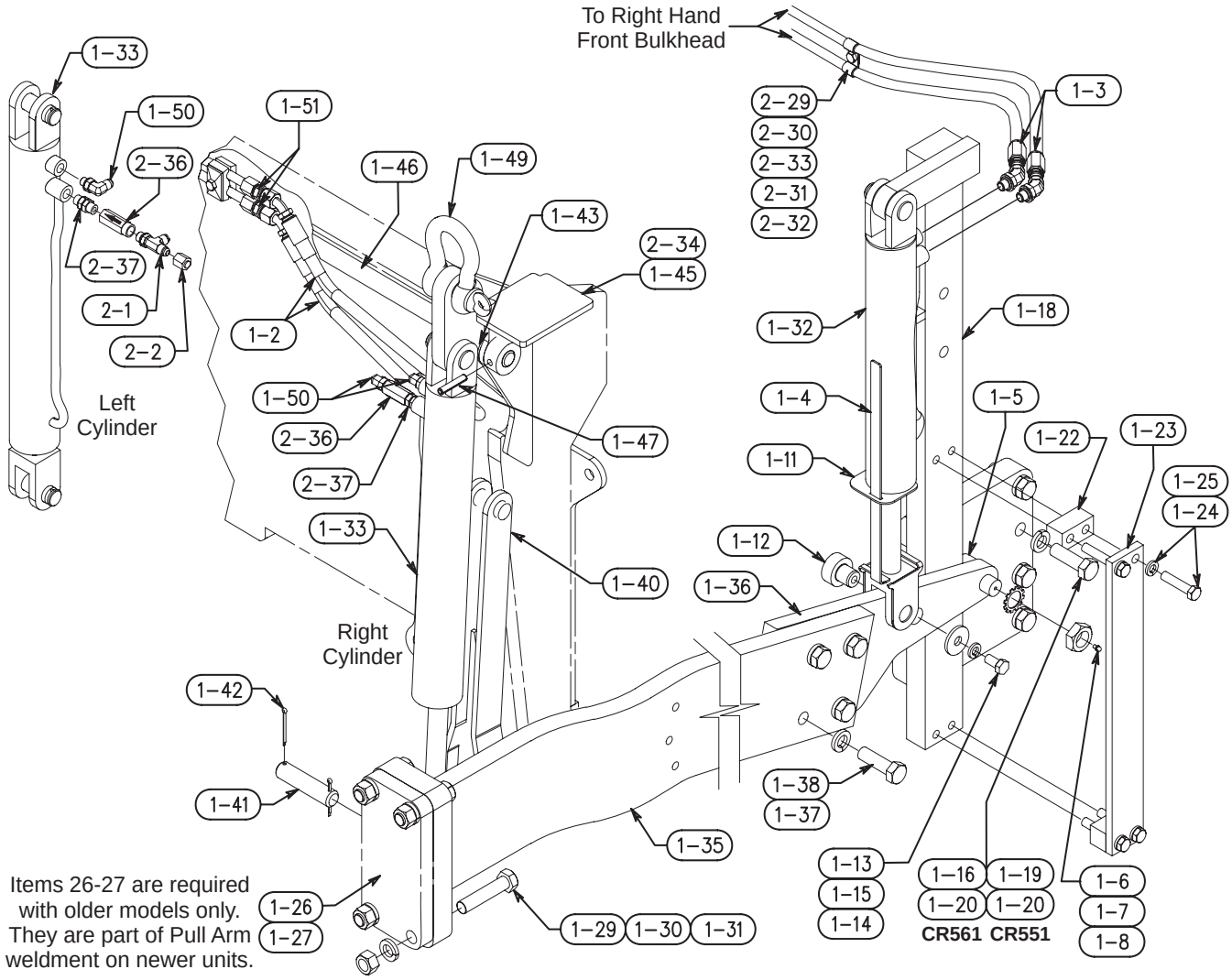


NOTE: Right Hand Side is shown. Left Hand Assembly is Equal and Opposite.

TEREX
CEDARAPIDS

## Screed Pull Arms

Parts List No_5032XSM

| Ref. No. | Part Number | Description | Quantity |
|---|---|---|---|
| 1-2 | 7651-029-34-01 | Hose Assembly | 5 |
| 1-3 | 7650-034-35-02 | Hose Assembly | 4 |
| 1-4 | 9704-903-47 | Indicator, Slope | 2 |
| 1-5 | 45134-002-83 | Cam Follower Bearing | 2 |
| 1-6 | 7007-015 | Washer, Shakeproof | 2 |
| 1-7 | 7017-054 | Hex Nut, 1" | 2 |
| 1-8 | 45245-014-01 | Fitting, Drive (Use tool 45245-015-01) | 2 |
| 1-11 | 9704-903-70 | Guide, Indicator | 2 |
| 1-12 | 9704-557-22 | Bushing, Pull Arm | 2 |
| 1-13 | 9700-459 | Washer | 2 |
| 1-14 | 7394-068 | Capscrew, 1/2" NC x 1" | 2 |
| 1-15 | 7014-005 | Lockwasher, 1/2" | 2 |
| 1-16 | 7383-121 | Capscrew, 3/4" NC x 2-3/4" | 8 |
| 1-17 | 9704-559-71 | Mount, Cylinder - Left Hand (Not Shown) | 1 |
| 1-18 | 9704-559-72 | Mount, Cylinder - Right Hand | 1 |
| 1-19 | Not Required | Capscrew, 3/4" NC x 3" | - |
| 1-20 | 7014-009 | Lockwasher, 3/4" | 8 |
| 1-22 | 9704-551-28 | Spacer | 4 |
| 1-23 | 9704-560-46 | Flat, Pull Arm Slide | 2 |
| 1-24 | 7383-076 | Capscrew, 1/2" NC x 3" | 8 |
| 1-25 | 7014-005 | Lockwasher, 1/2" | 8 |
| 1-26 | Not Supplied | Bracket, RH Screed (For Parts Lists 5032XPV, XPW & XPZ) | 1 |
| 1-27 | Not Supplied | Bracket, LH Screed (For Parts Lists 5032XPV, XPW & XPZ) | 1 |
| 1-29 | 7383-125 | Capscrew, 3/4" NC x 3-3/4" | 8 |
| 1-30 | 7014-009 | Lockwasher, 3/4" | 8 |
| 1-31 | 7012-030 | Hex Nut, 3/4" | 8 |
| 1-32 | 45090-007-85 | Hydraulic Cylinder - Uses Item #3-1 Seal Kit | 2 |
| 1-33 | 45090-007-86 | Hydraulic Cylinder - Uses Item #3-1 Seal Kit | 2 |
| 1-34 | 9704-582-69 | Arm, Pull - Left Hand (Not Shown) | 1 |
| 1-35 | 9704-582-70 | Arm, Pull - Right Hand | 1 |
| 1-36 | 9704-575-57 | Plate, Nose Piece | 2 |
| 1-37 | 7383-120 | Capscrew, 3/4" NC x 2-1/2" | 8 |
| 1-38 | 7014-009 | Lockwasher, 3/4" | 8 |
| 1-40 | 9704-905-42 | Lock, Screed | 2 |
| 1-41 | 9704-312-49 | Pin, Cylinder | 2 |
| 1-42 | 7011-066 | Cotter Pin, 5/32" x 2" | 4 |
| 1-43 | 7097-017 | Washer, 1" SAE | 2 |
| 1-44 | 9704-905-01 | Lock, Screed Release - Left Hand (Not Shown) | 1 |
| 1-45 | 9704-905-02 | Lock, Screed Release - Right Hand | 1 |
| 1-46 | 9704-904-98 | Rod, Screed Lock Release | 1 |
| 1-47 | 7238-141 | Roll Pin, 3/8" x 2" | 2 |
| 1-48 | 46005-503-04 | Washer, Reducing | 2 |
| 1-49 | 7262-020 | Shackle, 3-1/4" | 2 |
| 1-50 | 7430-275 | Elbow, 90° 3/8" with O-Ring (Part No. 45259-508-13) | 3 |
| 1-51 | 7430-385 | Fitting, Union 1/2" | 3 |
| 2-1 | 7430-291 | Tee, 3/8" - With O-Ring (Part No. 45259-508-12) | 1 |
| 2-2 | 7430-383 | Elbow, 3/8" Swivel Nut | 1 |
| 2-36 | 45090-001-47 | Valve, Throttle | 2 |
| 2-37 | 45720-776-22 | Union, 3/8" | 2 |
| 2-39 | 7430-313 | Elbow, 45° 3/8" | 4 |
| 3-1 | 45090-007-85-01 | Seal Kit (For hydraulic cylinders) | As Req |

TEREX
CEDARAPIDS

# Frame Raise Plumbing

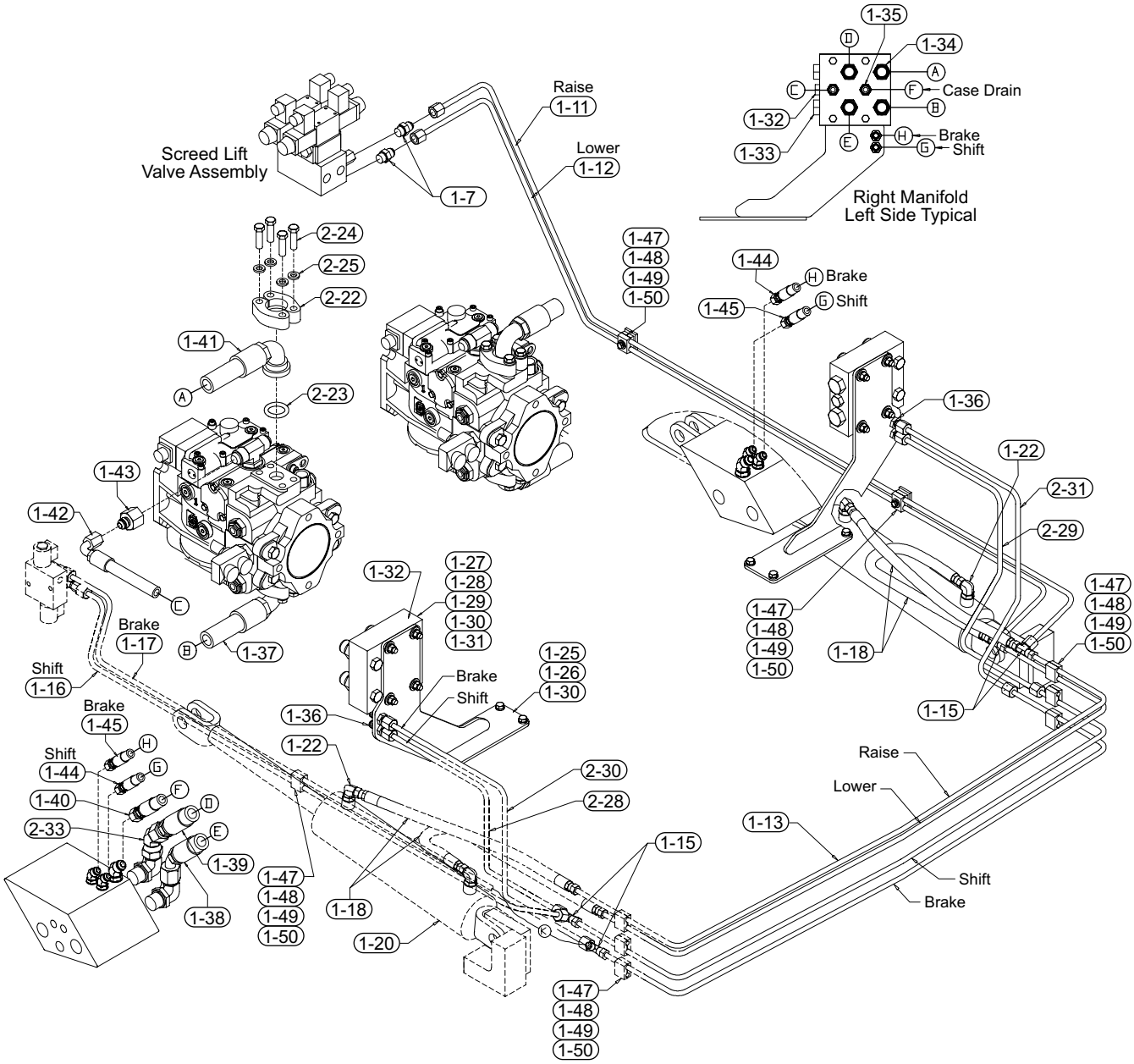

TEREX
CEDARAPIDS

## Frame Raise Plumbing

Parts List No. 5210QLB

| Ref. No. | Part Number | Description | Quantity |
|---|---|---|---|
| 1-7 | 7430-253 | Connector, 3/4" x 3/8" - with #3-1 O-Ring | 2 |
| 1-11 | 9704-659-93 | Tube Assembly, Raise | 1 |
| 1-12 | 9704-659-94 | Tube Assembly, Lower | 1 |
| 1-13 | 9704-663-16 | Tube Assembly, Front Reservoir | 4 |
| 1-15 | 7430-344 | Tee, 3/8" Swivel Nut - Male Branch | 4 |
| 1-16 | 9704-659-96 | Tube Assembly, Shift | 1 |
| 1-17 | 9704-659-97 | Tube Assembly, Brake | 1 |
| 1-18 | 7651-022-33 | Hose Assembly, to Cylinders | 4 |
| 1-20 | 45090-007-88 | Hydraulic Cylinder - See Form # 21715, This Section | 2 |
| 1-22 | 7430-276 | Elbow, 90° 3/4" x 3/8" - with #3-1 O-Ring | 4 |
| 1-25 | 9704-064-21 | Bracket, Right Hand Manifold | 1 |
| 1-26 | 7383-036 | Capscrew, 3/8" x 3/4" | 8 |
| 1-27 | 9704-660-10 | Block, Manifold | 2 |
| 1-28 | 7383-046 | Capscrew, 3/8" NC x 3" | 8 |
| 1-29 | 7014-018 | Washer, 3/8" | 8 |
| 1-30 | 7014-003 | Lockwasher, 3/8" | 16 |
| 1-31 | 7012-025 | Hex Nut, 3/8" NC | 8 |
| 1-32 | 7430-382 | Plug, 3/4" - with #3-1 O-Ring | 6 |
| 1-33 | 7430-442 | Plug, 1-1/16" - with #3-2 O-Ring | 4 |
| 1-34 | 7430-263 | Connector, 1-1/16" x 3/4" - with #3-2 O-Ring | 8 |
| 1-35 | 7430-255 | Connector, 3/4" x 1/2" - with #3-1 O-Ring | 4 |
| 1-36 | 7430-366 | Union, 3/8" Bulkhead | 4 |
| 1-37 | 7683-033-37-01 | Hose Assembly, Traction Pump to Manifold | 2 |
| 1-38 | 7683-031-34 | Hose Assembly, Traction Motor to Traction Pump | 2 |
| 1-39 | 7683-035-33 | Hose Assembly, Traction Motor to Traction Pump | 2 |
| 1-40 | 7652-032-33 | Hose Assembly, Case Drain | 2 |
| 1-41 | 7683-028-37-01 | Hose Assembly | 2 |
| 1-42 | 7652-024-35 | Hose Assembly | 2 |
| 1-43 | 7430-330 | Reducer, 3/4" x 1/2" | 2 |
| 1-44 | 7651-030-33 | Hose Assembly, Shift | 2 |
| 1-45 | 7651-032-33 | Hose Assembly, Brake | 2 |
| 1-47 | 45080-529-22 | Clamp Half, 3/8" | 18 |
| 1-48 | 7014-016 | Washer, 1/4" | 9 |
| 1-49 | 7014-001 | Lockwasher, 1/4" | 9 |
| 1-50 | 7383-007 | Capscrew, 1/4" NC x 1" | 9 |
| 2-22 | 45191-004-91 | Clamp Half, 1" | 8 |
| 2-23 | 45259-508-11 | O-Ring, 1.296" O.D. | 4 |
| 2-24 | 7383-056 | Capscrew, 7/16" NC x 1-3/4" | 16 |
| 2-25 | 7014-004 | Lockwasher, 7/16" | 16 |
| 2-28 | 9704-660-04 | Tube Assembly, Right Hand Shift | 1 |
| 2-29 | 9704-660-05 | Tube Assembly, Left Hand Shift | 1 |
| 2-30 | 9704-660-06 | Tube Assembly, Right Hand Brake | 1 |
| 2-31 | 9704-660-07 | Tube Assembly, Left Hand Brake | 1 |
| 2-33 | 7430-427 | Fitting, 3/4" Swivel | 2 |
| 3-1 | 45259-518-14 | O-Ring, 3/4" (For hydraulic fittings) | As Req |
| 3-2 | 45259-508-15 | O-Ring, 1-1/16" (For hydraulic fittings) | As Req |

TEREX
CEDARAPIDS

## Hydraulic Cylinder

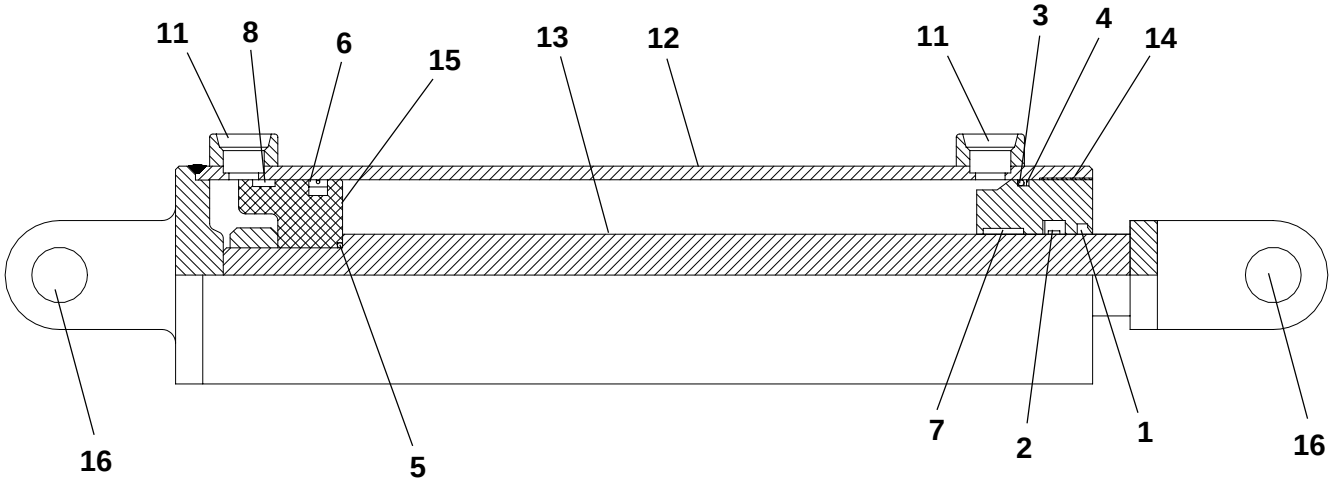


| Ref. No. | Part Number | Description | Quantity |
|---|---|---|---|
| | 45090-007-88 | Cylinder - Complete | 1 |
| 1 | 45090-007-88-01 | Wiper | 1 |
| 2 | 45090-007-88-02 | Seal | 1 |
| 3 | 45090-007-88-03 | O-Ring | 1 |
| 4 | 45090-007-88-04 | Back-Up | 1 |
| 5 | 45090-007-88-05 | O-Ring | 1 |
| 6 | 45090-007-88-06 | Seal | 1 |
| 7 | 45090-007-88-10 | Wear Ring | 1 |
| 8 | 45090-007-88-11 | Wear Ring | 1 |
| 9 | 45090-007-88-07 | Locknut | 1 |
| 10 | 45090-007-88-08 | Cotter Pin | 2 |
| 11 | 45090-007-88-09 | Port Plug | 2 |
| 12 | 45090-007-88-15 | Tube Assembly | 1 |
| 13 | 45090-007-88-16 | Rod Assembly | 1 |
| 14 | 45090-007-88-12 | Head | 1 |
| 15 | 45090-007-88-13 | Piston | 1 |
| 16 | 45090-007-88-14 | Clevis Pin | 2 |
| 17 | 45090-007-88-17 | Seal Kit, Cylinder (Not Shown) | 1 |

TEREX
CEDARAPIDS

## Grease Lines - Frame Raise Bearing

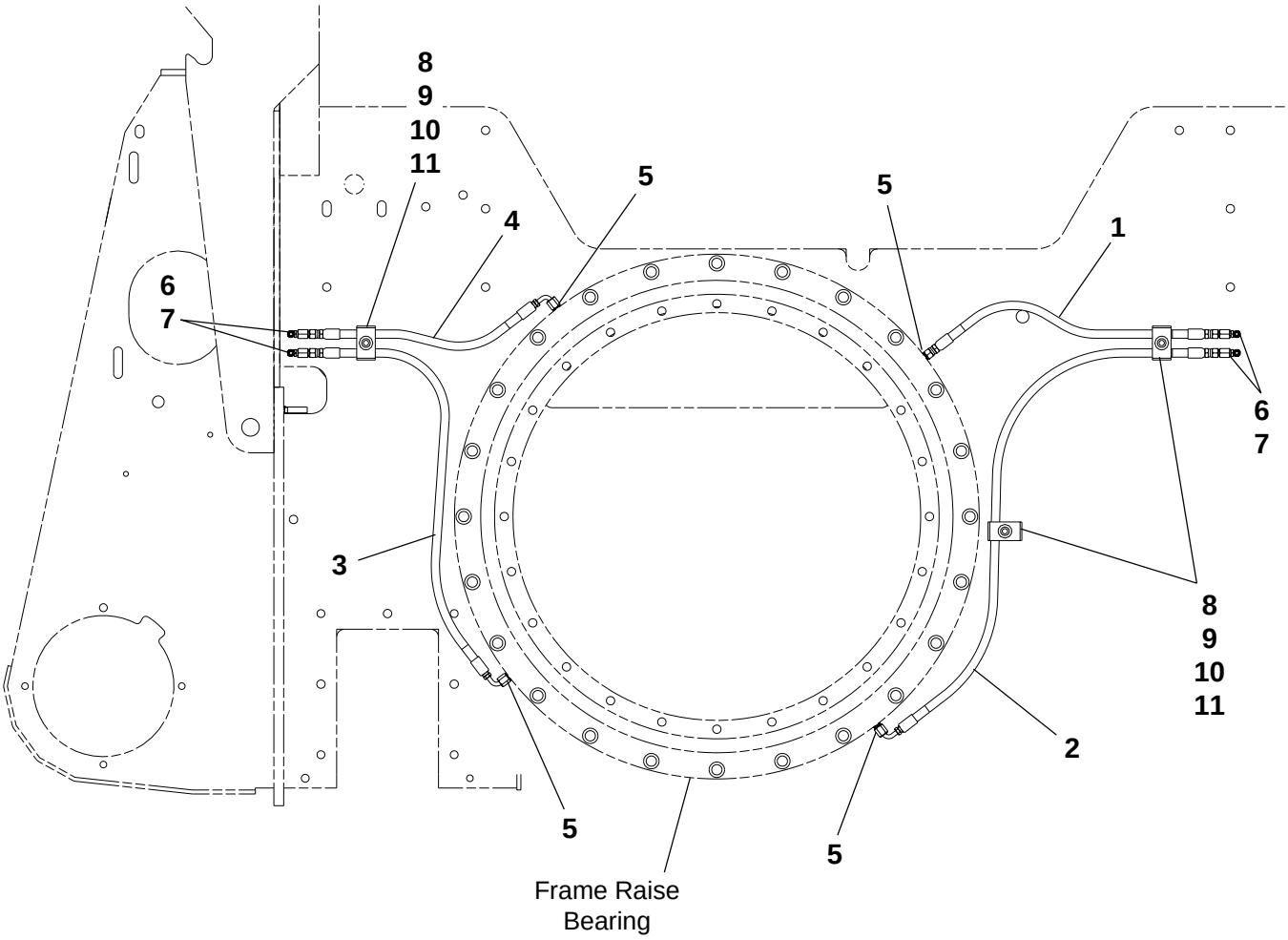


| Ref. No. | Part Number | Description | Quantity |
|---|---|---|---|
| 1 | 7650-020-33 | Hose Assembly, 1/4" x 20" | 2 |
| 2 | 7650-038-35 | Hose Assembly, 1/4" x 38" | 2 |
| 3 | 7650-030-35 | Hose Assembly, 1/4" x 30" | 2 |
| 4 | 7650-017-35 | Hose Assembly, 1/4" x 17" | 2 |
| 5 | 7430-001 | Connector, 1/8" x 1/4" | 8 |
| 6 | 7430-008 | Connector, 1/8" x 1/4" | 8 |
| 7 | 7051-004 | Grease Fitting, 1/8" 90° | 8 |
| 8 | 45080-529-23 | Clamp Half, 1/2" Tube | 12 |
| 9 | 45080-529-26 | Plate, Clamp Cover | 6 |
| 10 | 7014-002 | Lockwasher, 5/16" | As Req |
| 11 | 7383-024 | Capscrew, 5/16" NC x 2-1/2" | 6 |

TEREX
CEDARAPIDS

## Front Suspension & Steering

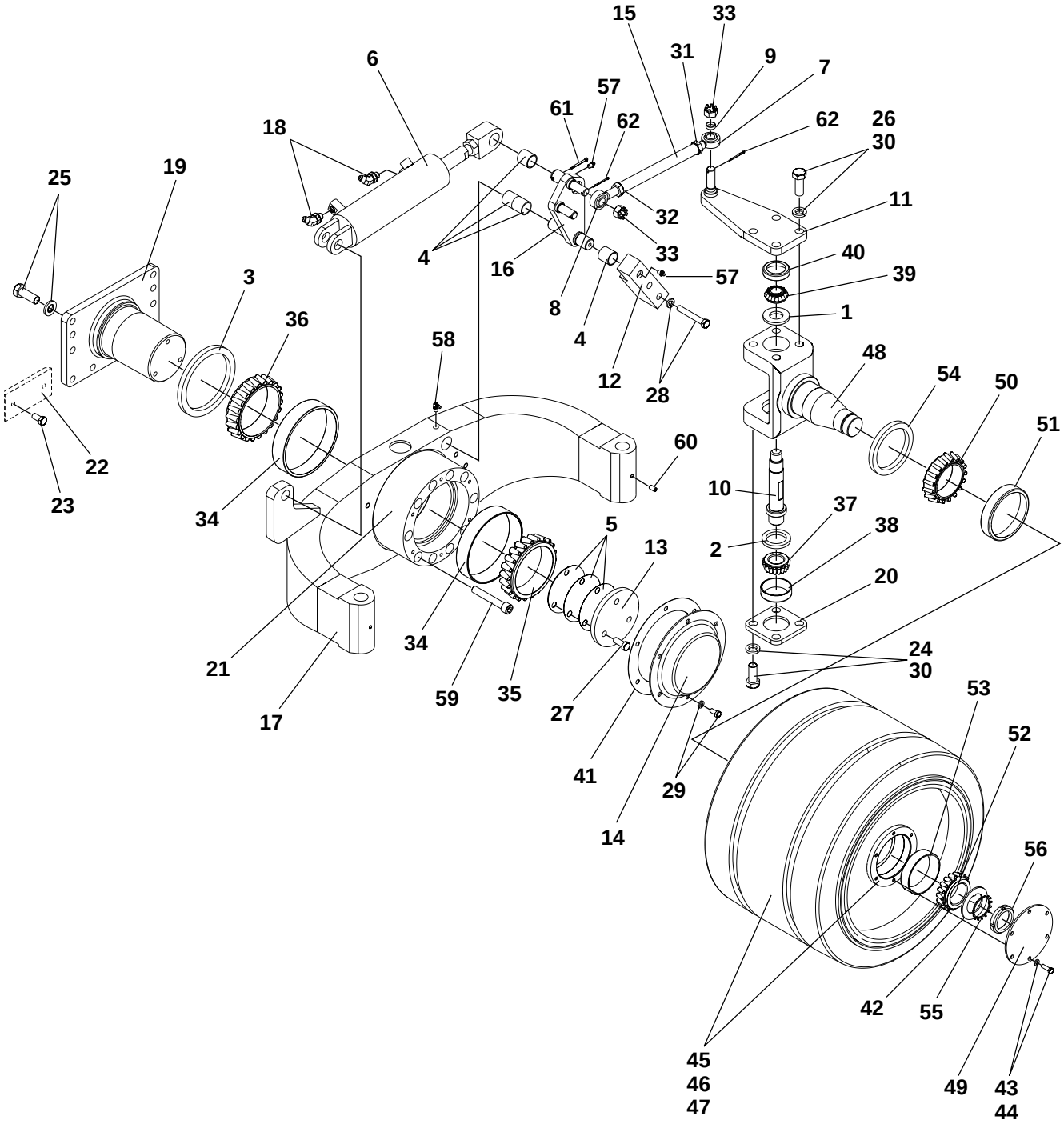

TEREX
CEDARAPIDS

## Front Suspension & Steering

Parts List No. 5032BAT

| Ref. No. | Part Number | Description | Quantity |
|---|---|---|---|
| 1 | 45200-265 | Oil Seal, Upper Kingpin | 2 |
| 2 | 45200-266 | Oil Seal, Lower Kingpin | 2 |
| 3 | 45200-224 | Oil Seal, Bogie | 2 |
| 4 | 7254-060 | Bearing, Oilite | 8 |
| 5 | 9704-051-81 | Shim, .003 | As Req |
| | 9704-051-80 | Shim, .005 | As Req |
| | 9704-051-79 | Shim, .020 | As Req |
| 6 | 45090-010-11 | Cylinder, Steering | 2 |
| | 45090-010-11-01 | Seal Kit (For above Cylinder) | As Req |
| 7 | 45134-011-13 | Rod End, 3/4" Left Hand Threads | 2 |
| 8 | 45134-011-16 | Rod End, 3/4" Right Hand Threads | 2 |
| 9 | 9704-053-02 | Spacer | 2 |
| 10 | 9704-051-91 | Kingpin | 2 |
| 11 | 9704-051-89 | Link, Steering | 2 |
| 12 | 9704-062-18 | Stop, Steering Linkage | 2 |
| 13 | 9704-051-78 | Retainer, Bogie Bearing | 2 |
| 14 | 9704-055-10 | Cover, Bogie Hub | 2 |
| 15 | 9704-055-47 | Rod, Steering (Front) | 2 |
| 16 | 9704-061-75 | Link, Left Hand Steering (Not Shown) | 1 |
| | 9704-061-76 | Link, Right Hand Steering (Shown) | 1 |
| 17 | 9704-055-39 | Bogie, Left Hand (Not Shown) | 1 |
| | 9704-055-40 | Bogie, Right Hand (Shown) | 1 |
| 18 | 7430-313 | Elbow, 45° 3/8" with O-Ring | 4 |
| | 45259-508-13 | O-Ring (for above fitting) | As Req |
| 19 | 4431-642-01 | Spindle, Bogie | 2 |
| 20 | 9704-051-90 | Cover, Lower Kingpin Bearing | 2 |
| 21 | 9704-055-13 | Hub | 2 |
| 22 | 9704-204-56 | Guide, Slat Chain | 2 |
| 23 | 7383-068 | Capscrew, 1/2" x 1" | 4 |
| 24 | 7383-117 | Capscrew, 3/4" x 1-3/4" | 8 |
| 25 | 7399-028 | Capscrew, 3/4" x 2" | 18 |
| | 7465-003 | Washer, 3/4' Hardened Flat | 18 |
| 26 | 7383-119 | Capscrew, 3/4" x 2-1/4" | 8 |
| 27 | 7383-069 | Capscrew, 1/2" x 1-1/4" | 6 |
| 28 | 7383-079 | Capscrew, 1/2" x 3-3/4" | 4 |
| | 7014-005 | Lockwasher, 1/2" | 4 |
| 29 | 7383-036 | Capscrew, 3/8" x 3/4" | 12 |
| | 7014-003 | Lockwasher, 3/8" | 12 |
| 30 | 7014-009 | Lockwasher, 3/4" | 16 |
| 31 | 45890-100-09 | Hex Nut, 3/4" Jam - Left Hand | 2 |
| 32 | 7017-052 | Hex Nut, 3/4" Jam | 2 |
| 33 | 7006-008 | Castle Nut, 3/4" | 4 |
| 34 | 45130-002-22 | Cup, Bogie Bearing | 4 |
| 35 | 45130-001-28 | Cone, Outer Bogie Bearing | 2 |

- Continued -

TEREX
CEDARAPIDS

## Front Suspension & Steering

Parts List No. 5032BAT

- Continued -

| Ref. No. | Part Number | Description | Quantity |
|---|---|---|---|
| 36 | 45130-001-29 | Cone, Inner Bogie Bearing | 2 |
| 37 | 45130-001-94 | Cone, Lower Kingpin Bearing | 2 |
| 38 | 45130-002-67 | Cup, Lower Kingpin Bearing | 2 |
| 39 | 45130-001-93 | Cone, Upper Kingpin Bearing | 2 |
| 40 | 45130-002-29 | Cup, Upper Kingpin Bearing | 2 |
| 41 | 9704-063-59 | Gasket, Bogie Hubcap | 2 |
| 42 | 45130-500-16 | Washer, Bearing | 2 |
| 43 | 7383-020 | Capscrew, 5/16" x 3/4" | 12 |
| 44 | 7014-002 | Lockwasher, 5/16" | 12 |
| 45 | 9704-062-22 | Wheel Assembly - Complete | 2 |
| 46 | Consult Factory | Hub, Wheel (Only) | 2 |
| 47 | Consult Factory | Tire, Wheel (Only) | 2 |
| 48 | 4431-610-04 | Spindle, Front | 2 |
| 49 | 9704-050-27 | Cover, Wheel Hub | 2 |
| 50 | 45130-001-85 | Cone, Inner Bearing | 2 |
| 51 | 45130-002-62 | Cup, Inner Bearing | 2 |
| 52 | 45130-001-42 | Cone, Outer Bearing | 2 |
| 53 | 45130-002-56 | Cup, Outer Bearing | 2 |
| 54 | 45200-209 | Oil Seal, Wheel | 2 |
| 55 | 45130-500-03 | Lockwasher, Bearing | 2 |
| 56 | 7030-011 | Locknut, Bearing (Included with item #48 Spindle) | 2 |
| 57 | 7051-001 | Grease Fitting, 1/8" Straight | 4 |
| 58 | 7051-004 | Grease Fitting, 1/8" 90° | 2 |
| 59 | 7025-144 | Capscrew, Sockethead 5/8" x 4" | 20 |
| 60 | 7131-101 | Setscrew, 1/2" x 5/8" | 2 |
| 61 | 7011-043 | Cotter Pin, 3/16" x 1-1/2" | 2 |
| 62 | 7011-039 | Cotter Pin, 1/8" x 1-1/2" | 4 |

*Note: Quantities shown are for both steering assemblies.*

Cedarapids
A Terex Company

## Front Wheel Assembly

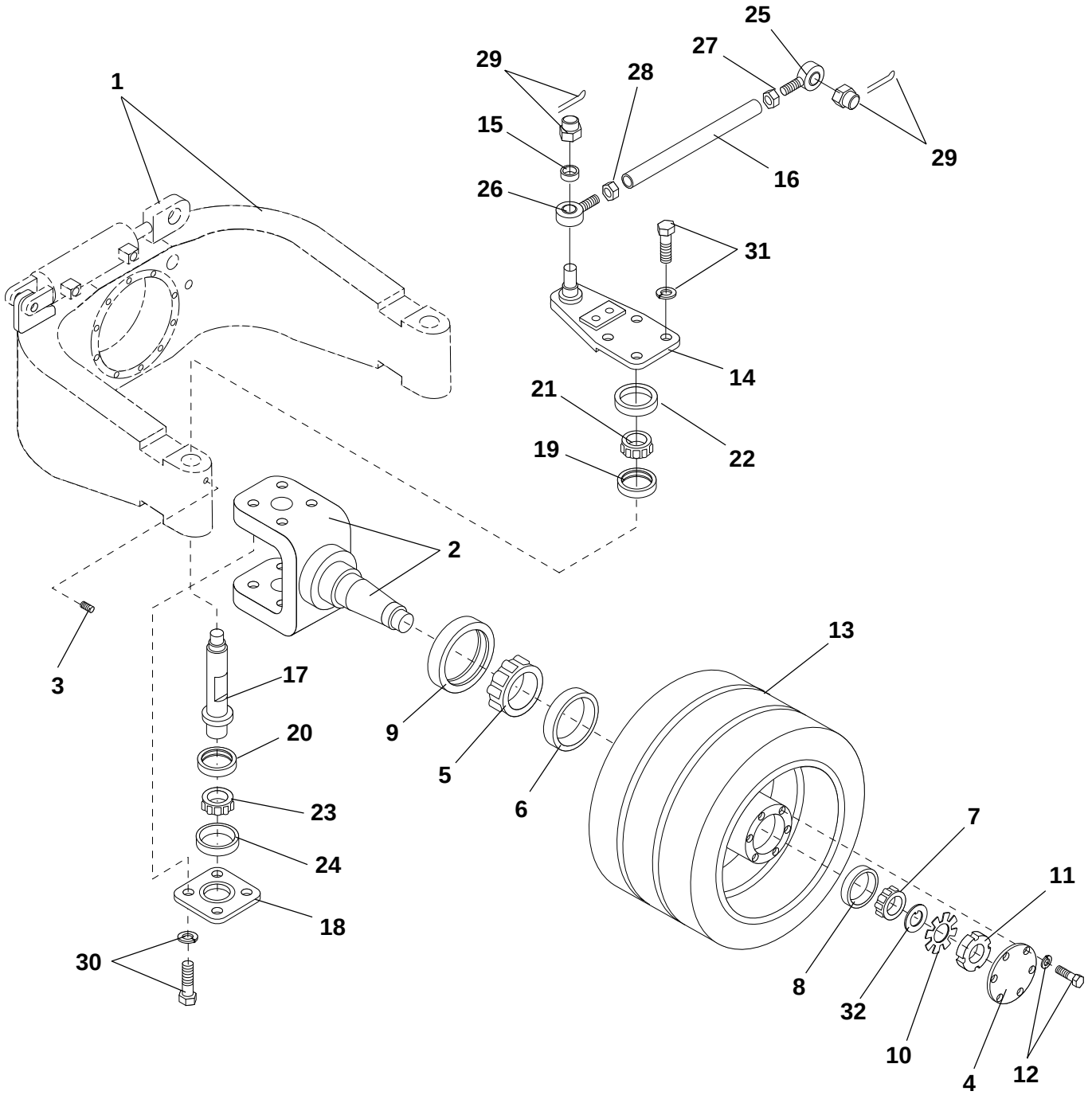


NOTE: Right Side Assembly shown.
Left Side Assembly equal & opposite.

Cedarapids
A Terex Company

## Front Wheel Assembly

Parts List No. 5032BBF

| Ref. No. | Part Number | Description | Quantity |
|---|---|---|---|
| 1 | Reference | *See Front Suspension & Steering, This Section* | - |
| 2 | 4431-610-04 | Spindle, Wheel | 2 |
| 3 | 7131-101 | Setscrew, 1/2" NC x 5/8" | 2 |
| 4 | 9704-050-27 | Cover, Wheel Hub | 2 |
| 5 | 45130-001-85 | Bearing Cone, Inner - 5.25" O.D. | 2 |
| 6 | 45130-002-62 | Bearing Cup, Inner - 3.25" Bore | 2 |
| 7 | 45130-001-42 | Bearing Cone, Outer | 2 |
| 8 | 45130-002-56 | Bearing Cup, Outer | 2 |
| 9 | 45200-209 | Oil Seal, Wheel | 2 |
| 10 | 45130-500-03 | Lockwasher, 1.967" | 2 |
| 11 | 7030-011 | Locknut, 1.9309" | 2 |
| 12 | 7383-020 | Capscrew, 5/16" NC x 3/4" | 12 |
| | 7014-002 | Lockwasher, 5/16" | 12 |
| 13 | 9704-062-22 | Wheel Assembly - Complete | 2 |
| | Consult Factory | Hub (Only) | 2 |
| | Consult Factory | Tire (Only) | 2 |
| 14 | 9704-051-89 | Link, Steering | 2 |
| 15 | 9704-053-02 | Spacer | 2 |
| 16 | 9704-055-48 | Tie, Long | 2 |
| 17 | 9704-051-91 | Kingpin | 2 |
| 18 | 9704-051-90 | Cover, Lower Kingpin Bearing | 2 |
| 19 | 45200-265 | Oil Seal, Upper Kingpin | 2 |
| 20 | 45200-266 | Oil Seal, Lower Kingpin | 2 |
| 21 | 45130-001-93 | Bearing Cone, Upper Kingpin - 1" Bore | 2 |
| 22 | 45130-002-29 | Bearing Cup, Upper Kingpin | 2 |
| 23 | 45130-001-94 | Bearing Cone, Lower Kingpin - 1.375" Bore | 2 |
| 24 | 45130-002-67 | Bearing Cup, Lower Kingpin - 2.8437" O.D. | 2 |
| 25 | 45134-011-13 | Rod End, 3/4" - Left Hand Threads | 2 |
| 26 | 45134-011-16 | Rod End, 3/4" - Right Hand Threads | 2 |
| 27 | 45890-100-09 | Hex Nut, 3/4" - Left Hand | 2 |
| 28 | 7017-052 | Hex Nut, 3/4" - Jam | 2 |
| 29 | 7006-008 | Castle Nut, 3/4" NF | 4 |
| | 7011-039 | Cotter Pin, 1/8" x 1-1/2" | 4 |
| 30 | 7383-117 | Capscrew, 3/4" NC x 1-3/4" | 8 |
| | 7014-009 | Lockwasher, 3/4" | 8 |
| 31 | 7383-119 | Capscrew, 3/4" NC x 2-1/4" | 8 |
| | 7014-009 | Lockwasher, 3/4" | 8 |
| 32 | 45130-500-16 | Washer, Bearing | 2 |

TEREX
CEDARAPIDS

## Rear Suspension with Frame Raise

Parts List No. 05234BDD

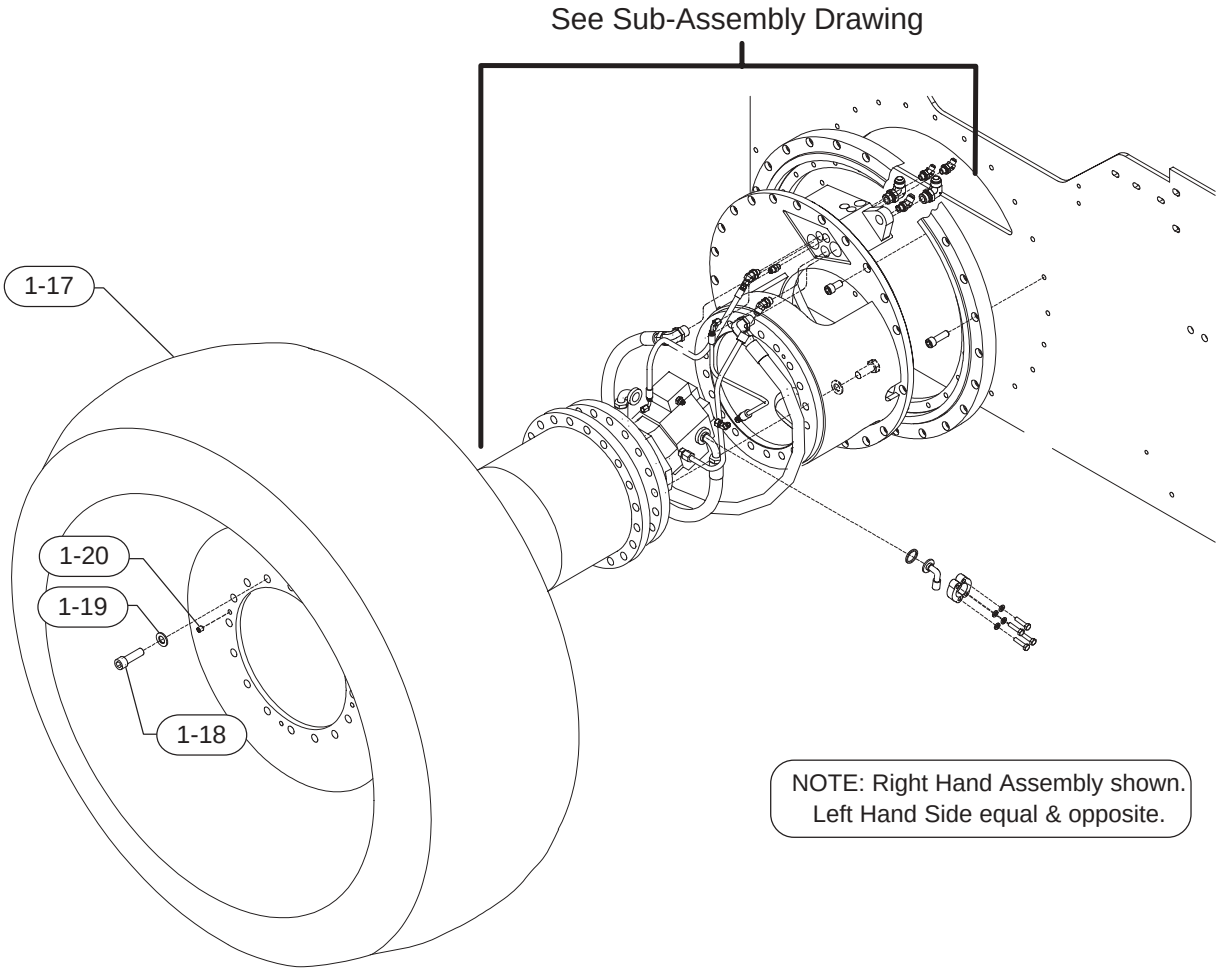


| Ref # | Part Number | REV | Part Name | Description | Qty |
|---|---|---|---|---|---|
| 1-02 | 0970406467 | | ASSEMBLY DRAWING | REAR SUSPENSION | REF |
| 1-11 | 0970805030 | A | SUB-ASSEMBLY | REAR SUSPENSION (See Following Pages) | 1 |
| 1-17 | 0970406397 | A | WHEEL | ASSEMBLY | 2 |
| | 0970406396 | A | RIM | REAR WHEEL 23.1 X 26 | AS REQ |
| | 4542500911 | - | TIRE | 23.1 X 26 TUBELESS | AS REQ |
| | 4542550034 | A | TIRE VALVE | | AS REQ |
| | 4542550040 | - | PLUG | RUBBER BOLT-IN | AS REQ |
| 1-18 | 4589030029 | - | CAPSCREW | SCH M20 X 50 | 30 |
| 1-19 | 07097015 | | WASHER | 3/4"SAE | 30 |
| 1-20 | 07131101 | | SET SCREW | 1/2" NC X 5/8" | 8 |

TEREX
CEDARAPIDS

## Rear Suspension Sub-Assembly

Part No. 0970805030

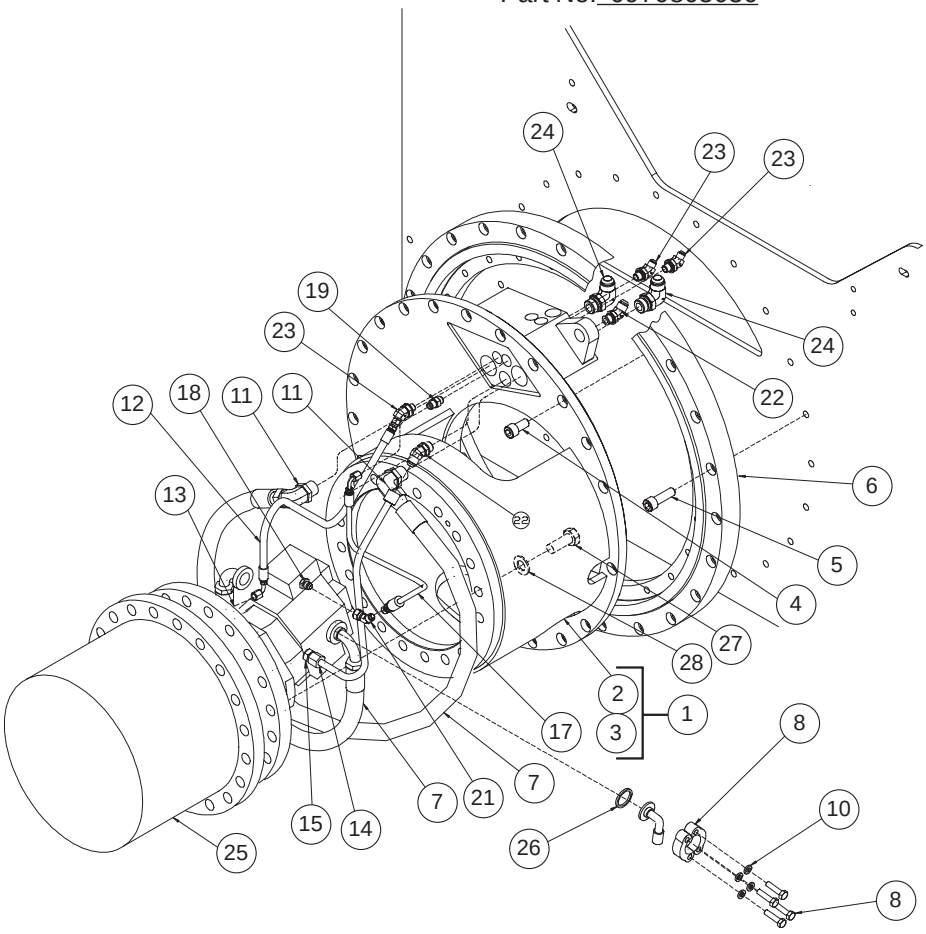


| Ref # | Part Number | REV | Part Name | Description | Qty |
|---|---|---|---|---|---|
| 1 | 0970905017 | - | KIT | ECCENTRIC | 1 |
| 2 | 0970406277 | D | SUPPORT | LH REAR SUSPENSION | 1 |
| 3 | 0970406278 | C | SUPPORT | RH REAR SUSPENSION | 1 |
| 4 | 07025031 | | CAPSCREW | 5/8" NCX 1-1/4" | 44 |
| 5 | 07025034 | | CAPSCREW | 5/8" NC X 2" | 46 |
| 6 | 4513400344 | - | BEARING | PAVER FRAME RAISE | 2 |
| 7 | 076830453701 | A | HOSE ASSY | 3/4" ID X 45" | 4 |
| 8 | 4519100491 | C | CLAMP | HALF 1" | 8 |
| 9 | 4589030066 | A | CAPSCREW | M12 X 40 X 1.75 | 16 |
| 10 | 4589030111 | A | WASHER | M12 X 18 X 2.5 | 16 |
| 11 | 07430282 | | ELBOW | #12SAE #12JIC | 4 |
| 12 | 076500273501 | - | HOSE ASSY | BRAKE VALVE TO | 2 |
| 13 | 07430416 | | CONNECTOR | 3/8"JIC X 1/4"S | 2 |
| 14 | 0765201633 | A | HOSE ASSY | 1/2" ID X 16" | 2 |
| 15 | 4572077612 | - | ELBOW | M18 X 1.5 X 1/2" | 2 |
| 17 | 076500213501 | - | HOSE ASSY | 1/4" ID X 21" | 2 |
| 18 | 4572077549 | - | FITTING | M14X1.5 TO 3/8JIC | 2 |
| 19 | 07430252 | | CONNECTOR | #6ORINGX3/8"JIC | 2 |
| 20 | 07430313 | | ELBOW | #6SAE X #6JIC 45DEG | 2 |
| 21 | 07430426 | | ELBOW | #6 X 45 SWIVEL | 2 |
| 22 | 07430314 | | ELBOW | 3/4"SAE 1/2"JIC | 4 |
| 23 | 07430313 | | ELBOW | #6SAE X #6JIC 45DEG | 4 |
| 24 | 07430282 | | ELBOW | #12SAE #12JIC | 4 |
| 25 | 4508000620 | - | HYDRAULIC MOTOR | GFT 40T29202 *(See Form 21493)* | 2 |
| 26 | 4525950811 | A | O RING | 1.296"ID 1-9/16"OD | 4 |
| 27 | 4589030029 | - | CAPSCREW | M20 X 50 | 40 |
| 28 | 07097015 | | WASHER | 3/4"SAE | 40 |

TEREX
CEDARAPIDS

## Grease Lines Assembly
**Frame Raise Bearing** Part No. 0970406301

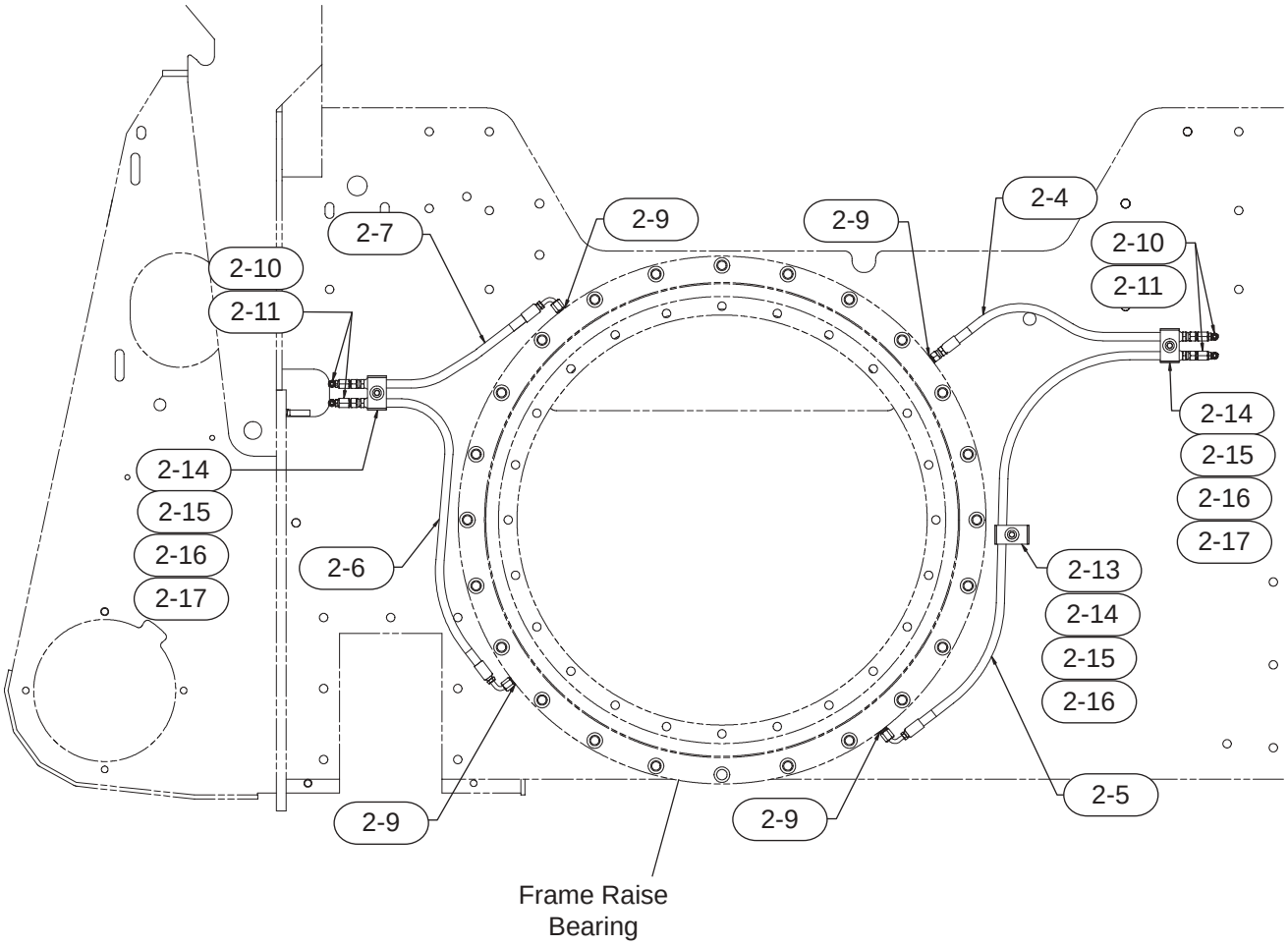


| Ref # | Part Number | REV | Part Name | Description | Qty |
|---|---|---|---|---|---|
| 2-02 | 0970406301 | B | ASSEMBLY DRAWING | BRG GREASE LINES | REF |
| 2-04 | 0765002033 | A | HOSE ASSY | 1/4" ID X 20" | 2 |
| 2-05 | 0765003835 | A | HOSE ASSY | 1/4" X 38" | 2 |
| 2-06 | 0765003035 | A | HOSE ASSY | 1/4" X 30" | 2 |
| 2-07 | 0765001735 | A | HOSE ASSY | 1/4" X 17" | 2 |
| 2-09 | 07430001 | | CONNECTOR | 1/8"NPT-1/4"JIC | 8 |
| 2-10 | 07430008 | | CONNECTOR | 1/8"NPT-1/4"JIC | 8 |
| 2-11 | 07051004 | | FITTING | GREASE 1/8" 90DEG | 8 |
| 2-13 | 4508052923 | - | CLAMP HALF | FOR 1/2" TUBE | 12 |
| 2-14 | 4508052926 | - | PLATE | COVER FOR CLAMP | 6 |
| 2-15 | 07014002 | | WASHER | 5/16" LOCK | 6 |
| 2-16 | 07383024 | | CAPSCREW | 5/16"NC X 1-1/2 | 6 |

TEREX
CEDARAPIDS

## Hydraulic Motor

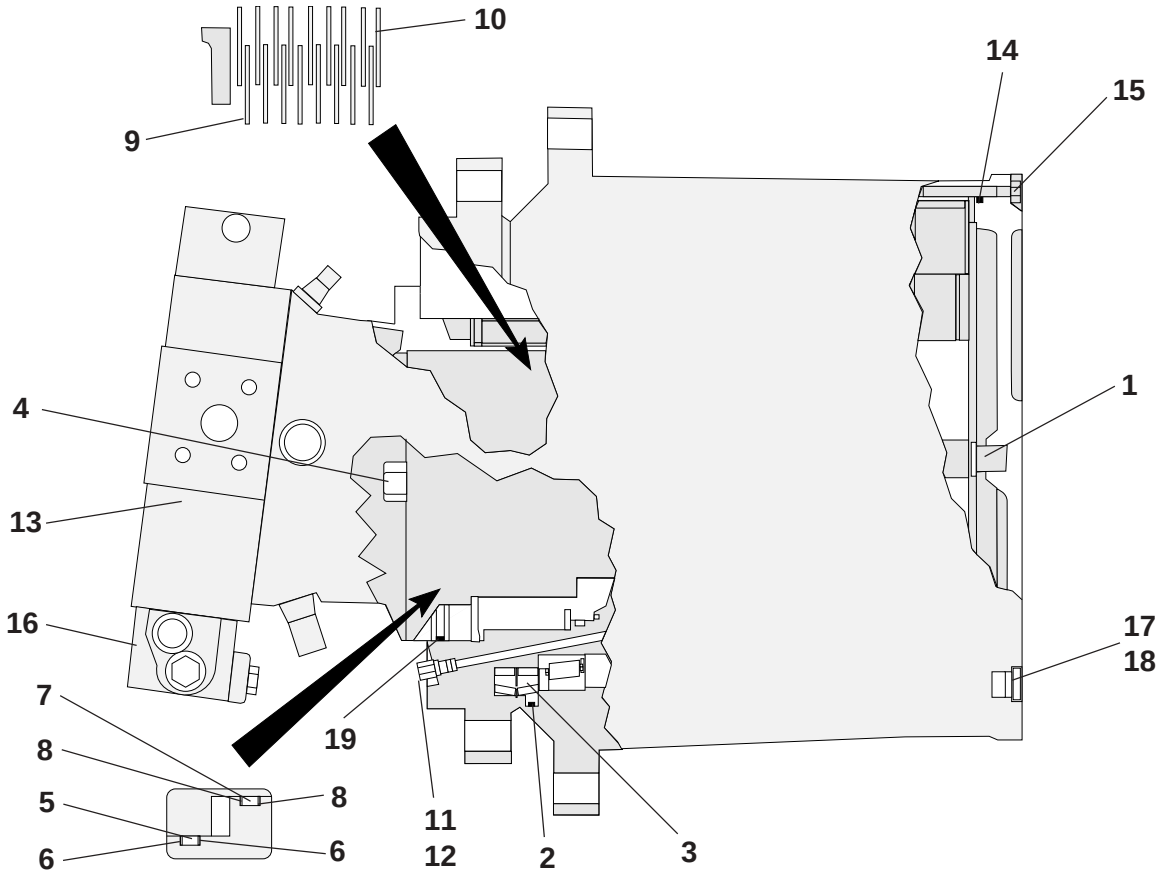


| Ref. No. | Part Number | Description | Quantity |
|---|---|---|---|
| | 45080-006-20 | Hydraulic Motor - Complete | 1 |
| 1 | 45080-006-20-08 | Button, Thrust | 1 |
| 2 | 45080-006-20-04 | O-Ring | 1 |
| 3 | 45080-006-20-01 | Seal, Face | 1 |
| 4 | 45080-006-20-03 | Bolt, Hex Head | 2 |
| | 45080-006-20-07 | Brake Seal Kit | 1 |
| 5 | | Seal, Piston | 1 |
| 6 | | Ring, Back Up | 2 |
| 7 | | Seal, Piston | 1 |
| 8 | | Ring, Back Up | 1 |
| | 45080-006-20-06 | Brake Disk Kit | 1 |
| 9 | | Disk, Inner | 8 |
| 10 | | Disk, Outer | 9 |
| 11 | 45720-776-08 | Adapter, Brake | 1 |
| 12 | 5220-750-45 | Ring, Seal | 1 |
| 13 | 45080-006-20-09 | Motor, Hydraulic | 1 |
| 14 | 45080-006-20-10 | O-Ring | 1 |
| 15 | 45080-006-20-11 | Bolt, Hex Head | 12 |
| 16 | 45080-006-20-02 | Valve, Flushing | 1 |
| 17 | 45080-004-79-06 | Plug, Screw | 2 |
| 18 | 45080-004-79-05 | Ring, Seal | 2 |
| 19 | 45080-006-20-05 | O-Ring | 1 |

*Note: Quantities shown are for (1) one motor assembly.*

TEREX
CEDARAPIDS

## Steering Feedback Sensor

Parts List No. 09704-064-48

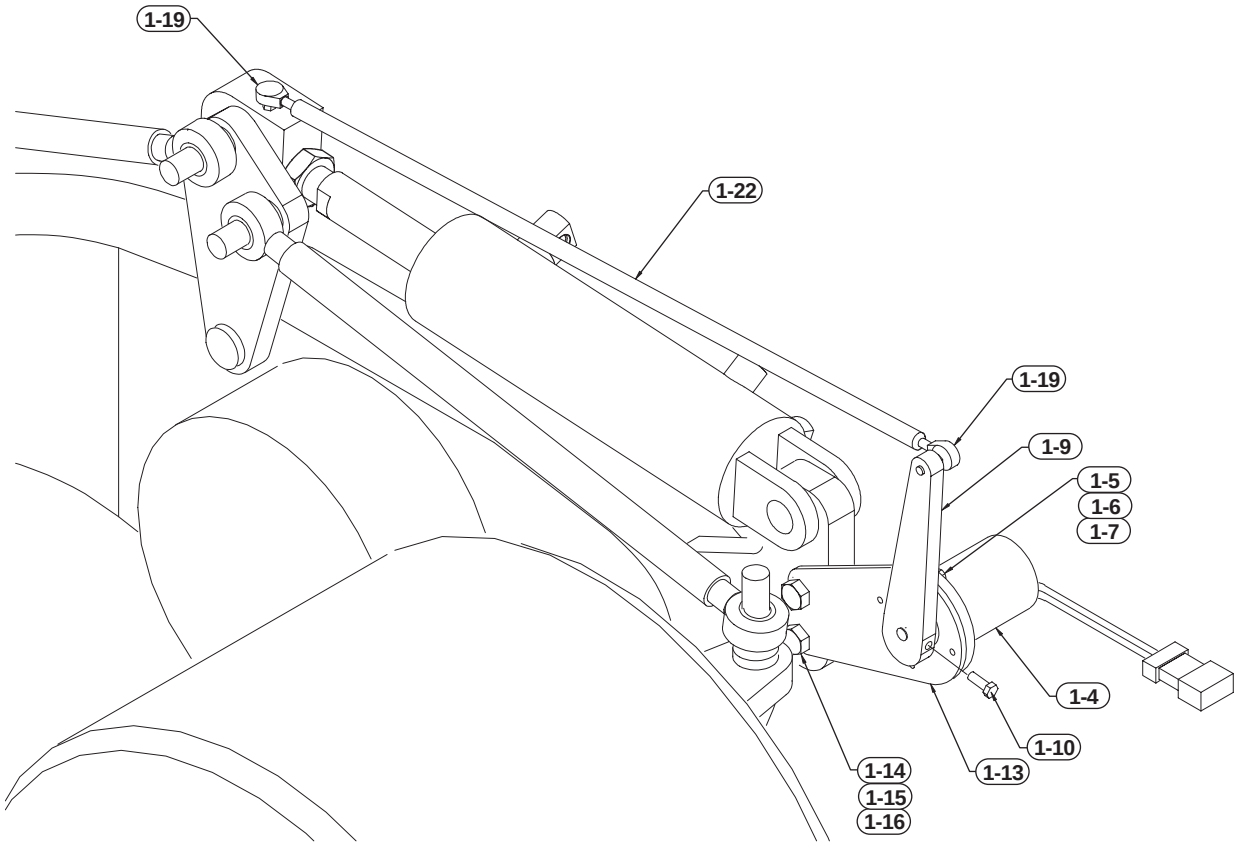


| Ref # | Part Number | Part Name | Description | Qty |
|---|---|---|---|---|
| 1-4 | 4606152514 | SENSOR | STEERING | 1 |
| 1-5 | 07435098 | MACH SCREW | #10-24 X 3/4" | 4 |
| 1-6 | 07439028 | WASHER | #10 FLAT | 4 |
| 1-7 | 07439003 | WASHER | #10 LK | 4 |
| 1-9 | 0970405918 | PLATE | SENSOR ARM | 1 |
| 1-10 | 07394005 | CAPSCREW | 1/4" NF X 7/8" | 1 |
| 1-13 | 0970405917 | PLATE | FEEDBK SENSOR MTG | 1 |
| 1-14 | 07383072 | CAPSCREW | 1/2"NC X 2" | 2 |
| 1-15 | 07014005 | WASHER | 1/2" LOCK | 2 |
| 1-16 | 07012027 | HEX NUT | 1/2" NC | 2 |
| 1-19 | 4537800204 | BALL JOINT | | 2 |
| 1-22 | 0970405916 | ROD | | 1 |

TEREX
CEDARAPIDS

## Steering Hydraulic Circuit

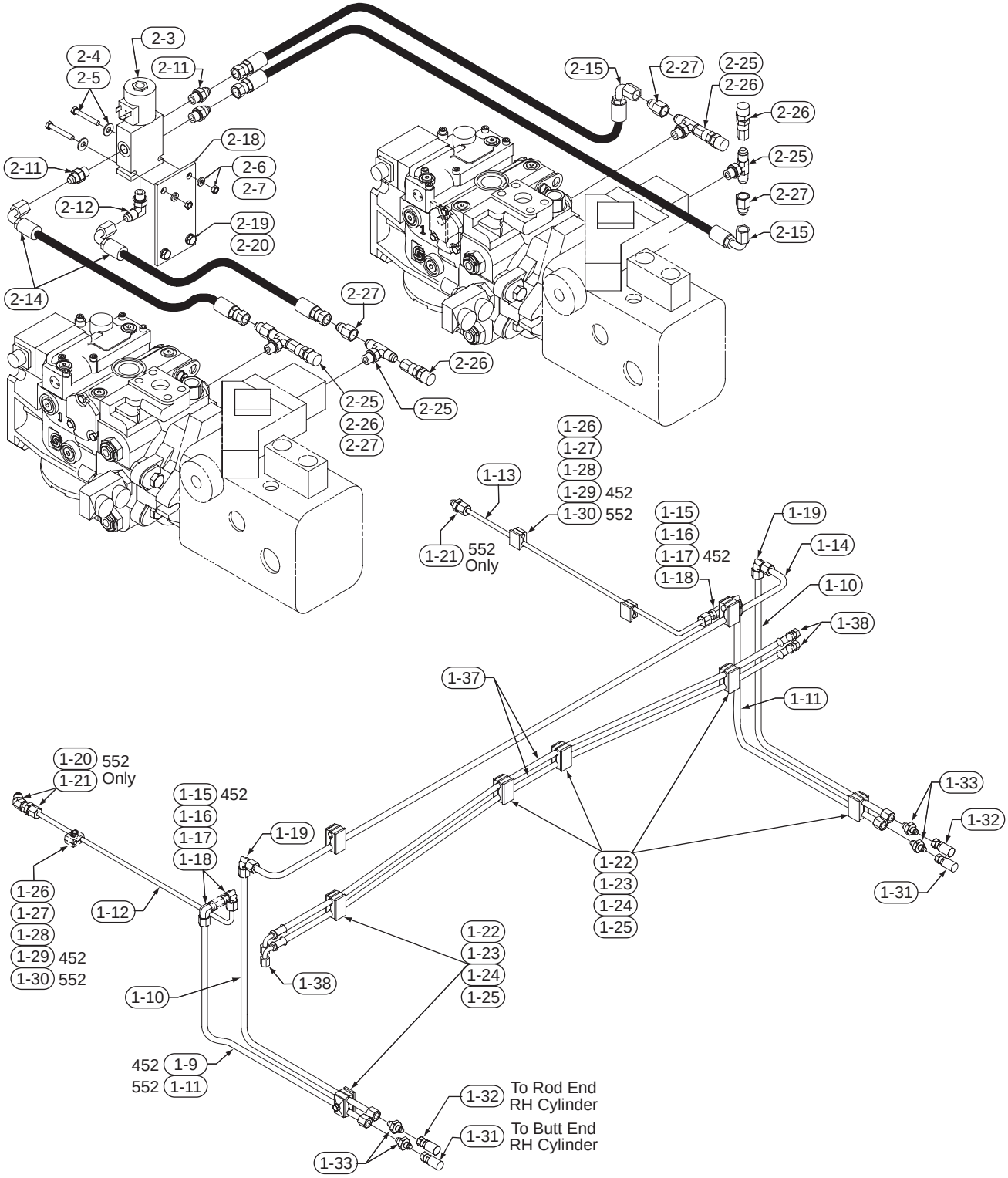

TEREX
CEDARAPIDS

## Steering Hydraulic Circuit
Parts List No. 5210QWQ

| Ref. No. | Part Number | Description | Quantity |
|---|---|---|---|
| 1-9 | 09704-659-88 | Tube Assembly, RH Front Steering | 1 |
| 1-10 | 09704-659-87 | Tube Assembly, Front Steering | 2 |
| 1-11 | 09704-659-89 | Tube Assembly, LH Front Steering | 1 |
| 1-12 | 09704-659-90 | Tube Assembly, RH Rear Steering | 1 |
| 1-13 | 09704-659-91 | Tube Assembly, LH Rear Steering | 1 |
| 1-14 | 09704-656-43 | Tube Assembly, Steering Crossover | 1 |
| 1-15 | 07430-325 | Reducer, 3/8" x 1/2" | 2 |
| 1-16 | 07430-207 | Nut, 1/2" JIC | 2 |
| 1-17 | 07430-367 | Union, 1/2" Bulkhead | 2 |
| 1-18 | 07430-405 | Elbow, 90° 1/2" Swivel | 2 |
| 1-19 | 07430-410 | Elbow, 3/4" 90° | 2 |
| 1-22 | 45080-529-23 | Clamp Half, 1/2" | 12 |
| 1-23 | 45080-529-26 | Plate, Cover Clamp | 6 |
| 1-24 | 07383-024 | Capscrew, 5/16" x 1-1/2" | 6 |
| 1-25 | 07014-002 | Lockwasher, 5/16" | 6 |
| 1-26 | 45080-529-22 | Clamp Half, 3/8" | 8 |
| 1-27 | 07014-016 | Washer, 1/4" | 4 |
| 1-28 | 07014-001 | Lockwasher, 1/4" | 4 |
| 1-29 | 07383-007 | Capscrew, 1/4" x 1-1/4" | 4 |
| 1-31 | 07651-017-33-02 | Hose Assembly, 3/8" ID x 17" | 2 |
| 1-32 | 07651-025-33-01 | Hose Assembly, 3/8" ID x 25" | 2 |
| 1-33 | 07430-385 | Union, 1/2" | 4 |
| 1-37 | 07650-076-35-01 | Hose Assembly, Cross Over | 2 |
| 1-38 | 07430-239 | Plug, 3/8" | 4 |
| 2-3 | 45252-005-32 | Valve, Differential Lock | 1 |
| 2-4 | 07383-010 | Capscrew, 1/4" x 2" | 2 |
| 2-5 | 07014-016 | Washer, 1/4" | 2 |
| 2-6 | 07014-001 | Lockwasher, 1/4" | 2 |
| 2-7 | 07012-023 | Hex Nut, 1/4" | 2 |
| 2-11 | 07430-252 | Fitting, 3/8" with O-Ring | 3 |
| 2-12 | 07430-275 | Elbow, 90° 3/8" with O-Ring | 1 |
| 2-14 | 07660-018-35-01 | Hose Assembly, Right Pump Balance Line | 2 |
| 2-15 | 07660-050-35-01 | Hose Assembly, Left Pump Balance Line | 2 |
| 2-18 | 09704-324-34 | Mount, Lock Valve | 1 |
| 2-19 | 07383-020 | Capscrew, 5/16" x 3/4" | 2 |
| 2-20 | 07014-002 | Washer, 5/16" Lock | 2 |
| 2-25 | 07430-302 | Tee, 3/8" | 4 |
| 2-26 | 45080-527-18 | Test Fitting, 3/8" | 4 |
| 2-27 | 45259-012-03 | Fitting, 5/64" | 4 |