TEREX®
Roadbuilding

Model CR662RM
RoadMix Machine

Serial Number: 060610

TEREX
Roadbuilding

Table of Contents

BOM	Description	Page
Serial Number 060610		
PaverMenuSheet	Operation Manual Menu Sheet	1
05231LDD	Basket Plumbing - Basic Hydraulic Components	3
05231JBA	Conveyor - Conveyor Electrical Components	13
05231LAC	Conveyor - Conveyor Hydraulic Plumbing	15
05231AFA	Conveyor - Guard Rail Assembly	21
05231BAE	Conveyor - RoadMix Conveyor Components	23
05231KAB	Conveyor - RoadMix Conveyor Emblems	37
05231JAE	Electrical - Console, Junction Box & Remote Control Box	39
05032GSK	Engine & Pumps - Air Cleaner	47
05032GWL	Engine & Pumps - Batteries	49
05231NAE	Engine & Pumps - Fuel System	51
05231LCD	Engine & Pumps - Hydraulic Reservior Package	57
05234GCD	Engine & Pumps - Power Mounting	65
05231LBC	Engine & Pumps - Pump Drives	73
05231UCB	Feed System - Remix Auger Drive Components	81
05231UBC	Feed System - Remixing Auger Cover Components	87
05231UAF	Feed System - Remixing Augers Assembly	89
05032MAE	Fume System - Additional Parts	93
05037MZT	Main Frame - Console Cover	95
05234MAB	Main Frame - Console Mechanical	97
05234KDQ	Main Frame - Emblems	103
05234HAA	Main Frame - Hood w/Charge Air Cooler	105
05036VAD	Main Frame - Hopper Extension	109
05036VAH	Main Frame - Hopper Extension	111
05231ADC	Main Frame - Hopper Wings & Parts	113
05231AAC	Main Frame - Main Frame Parts	117
05231EDC	Main Frame - Operator Access Walkways & Railing	121
05032KGC	Main Frame - Operator's Seat	123
05234LAF	Main Frame - Serial Parts	125
05231EMA	Main Frame - Spray Down Hose Reel	129
05231SCC	Main Frame - Tool Box Assembly	131
05046YUB	Main Frame - Umbrella	133
05234YCD	Push Rollers - 1" Spacer Blocks	135
05234YAB	Push Rollers - Ocillating Push Roller Assembly	137
05234RCD	Track System - Frame Raise Components	139
05234BKD	Track System - Frame, Drive & Plumbing Components	147

Standard Paving Equipment Operation & Maintenance Instructions.
The following publications compose the Operation & Maintenance Manuals for this Equipment.

MANUALS - TRACTORS

	PART NO.	FORM	DESCRIPTION
☐	499992523101	21286	CR300 O&M
☐	499992523102	21284	CR400 Slat O&M
☐	499992523103	21521	CR400 Remix O&M
☐	499992523104	20850	CR500 Slat O&M
☐	499992523105	21522	CR500 Remix O&M
☐	499992523106	23028	300 Series - Tier II/Tier III
☐	499992523107	23029	400 Series - Tier II/Tier III
☐	499992523108	23030	500 Series - Tier II/Tier III
☒	499992523109	23915	662RM RoadMix O&M
☐	_____	_____	_____

MANUALS - SCREEDS

	PART NO.	FORM	DESCRIPTION
☐	499992523201	19373	Fastach 8 Screed O&M
☐	499992523202	18537	Fastach 10 Screed O&M
☐	499992523203	22415	Fastach II O&M
☐	499992523204	22416	ST16-18 O&M
☐	499992523205	18565	Stretch 20 Screed O&M
☐	499992523207	23596	VersaScreed O&M
☐	_____	_____	_____

MANUALS - CONTROLS

	PART NO.	FORM	DESCRIPTION
☐	49999176	20576	Gen III Sonics O&M
☐	499992526001	18121	Sundstrand Auto Grade & Slope O&M
☐	499992526003	22806	AGL EZ-PAV O&M
☐	49999188	21048	Topcon System 4 O&M
☐	499992526002	22506	Topcon SAS O&M
☐	499992526004	23021	Topcon System 5 & Smoothtrac O&M
☐	499992526007	23561	Moba-Matic Operation
	(Includes 23562, Moba Big-Ski - Do not order separately)		
☐	499992526008	23562	Moba Big-Ski Installation
☐	499992526011	24580	Moba Mechanical Grade & Slope Control System
☐	_____	_____	_____
☐	_____	_____	_____

PAVER SAFETY MANUAL

Note: A safety manual is supplied with each machine shipment within Manuals Package 04418-795-01. All Manuals supplied following original machine shipment must include a safety manual.

☒	499992526005	AP-120-02	AEM Paver Safety Manual

SCHEMATICS - TRACTOR HYDRAULIC

	PART NO.	DESCRIPTION
☐	4495-008	400/500 Series Slat Pavers
☐	4495-012	300 Series Slat Pavers
☐	4495-014	400/500 Series Remix Pavers
☒	4495-019	662RM Road Mix Machine
☐	4495-028	300L Series Pavers
☐	4495-033	300L Series Pavers
☐	_____	_____

SCHEMATICS - TRACTOR ELECTRICAL

	PART NO.	DESCRIPTION
☐	4494-105-19	352 Slat Pavers - Tier II
☐	4494-105-20	362 Slat Pavers - Tier II
☐	4494-105-21	452/552 Slat Pavers - Tier II
☐	4494-105-22	462/562 Slat Pavers - Tier II
☐	4495-022	662RM Road Mix Machine
☐	4495-023	452/552 Slat Pavers - Tier III
☐	4495-024	462/562 Slat Pavers - Tier III
☐	4495-025	452/552 Remix Pavers - Tier III
☐	4495-026	462/562 Remix Pavers - Tier III
☐	4495-030	352L Slat Paver - Tier III
☐	4495-031	362L Slat Paver - Tier III
☒	4495-032	662RM Road Mix Machine
☐	4495-038	362L Slat Paver - Tier III
☐	4495-040	452/552 Slat Pavers - Tier III
☐	4495-041	462/562 Slat Pavers - Tier III
☐	_____	_____

SCHEMATICS - SCREEDS

	PART NO.	DESCRIPTION
☐	4495-004	Hydraulic Schematic - All Stretch Screeds
☐	4495-005	Hydraulic Schematic - All Fixed Screeds
☐	4495-007	Electric Schematic & Generator Drive Hydraulic Schematic - Stretch Elec Screeds (**Note:** Requires Hyd Schematic 4495-004 also)
☐	4495-011	Electric & Hydraulic Schematic (20kW/1PH Generator) - Fastach II Screed
☐	4495-013	Electric & Hydraulic Schematic - VersaScreed
☐	4495-029	Electric & Hydraulic Schematic - Fastach Electric Screeds
☐	4495-035	Electric & Hydraulic Schematic - Fastach Electric Screeds
☐	_____	_____
☐	_____	_____

Return to Table of Contents Page

TEREX CEDARAPIDS

Table of Contents

Basket Plumbing & Hydraulic Components - 05231LDD

Ref No.	Description	Page No.
1	Basket Plumbing Illustration	2-3
2	Basket Plumbing Parts List	4-5
3	LH Charge Filter Sub-Assembly	6
4	RH Charge Filter Sub-Assembly	7
5	Valve Assembly - Screed Lift	8
6	Valve Assembly - L.H. Front Bulkhead	9
7	Valve Assembly - R.H. Front Bulkhead	10

Return to Table of Contents Page

TEREX
CEDARAPIDS

Basket Plumbing

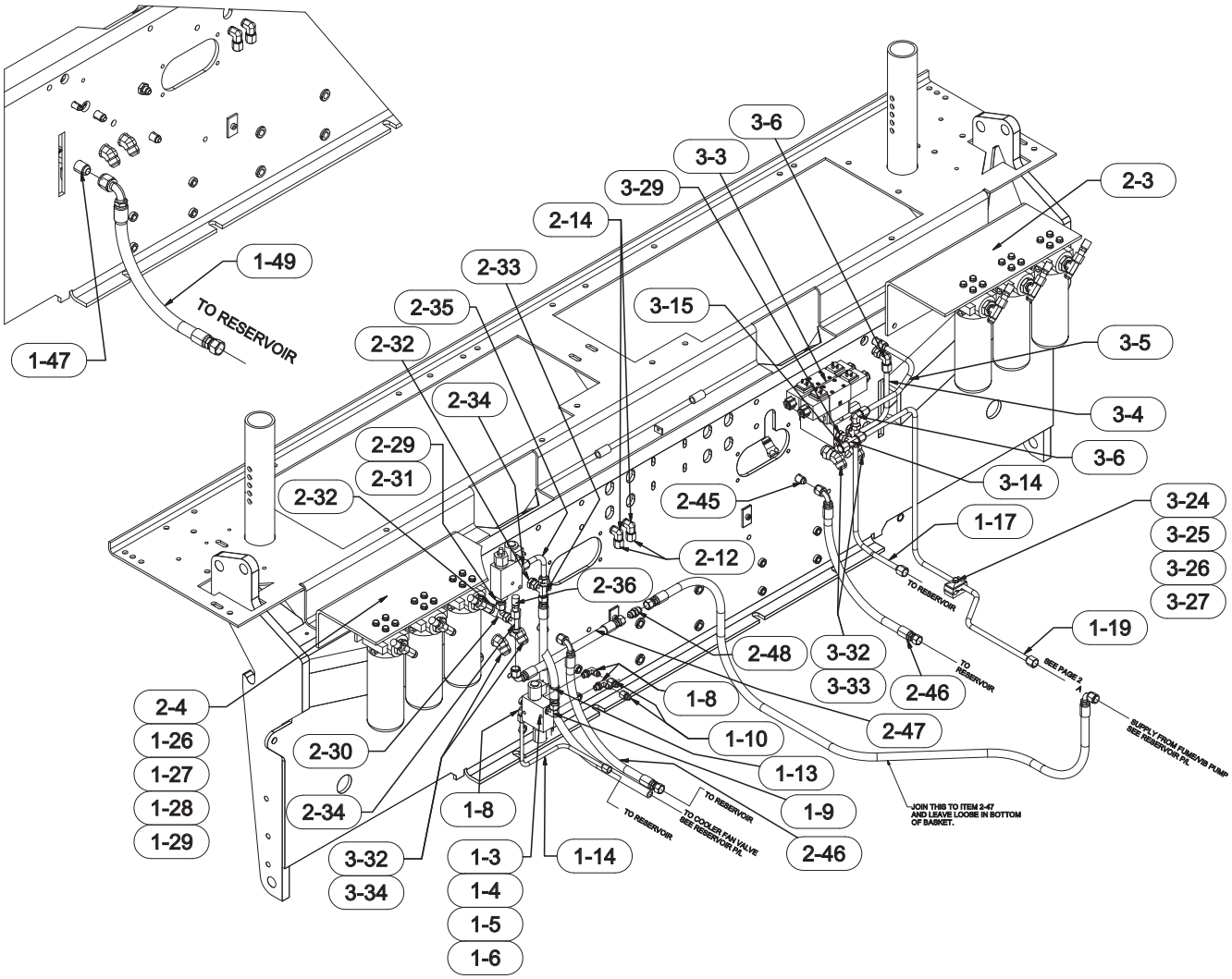

Return to Table of Contents Page

TEREX
CEDARAPIDS

Basket Plumbing

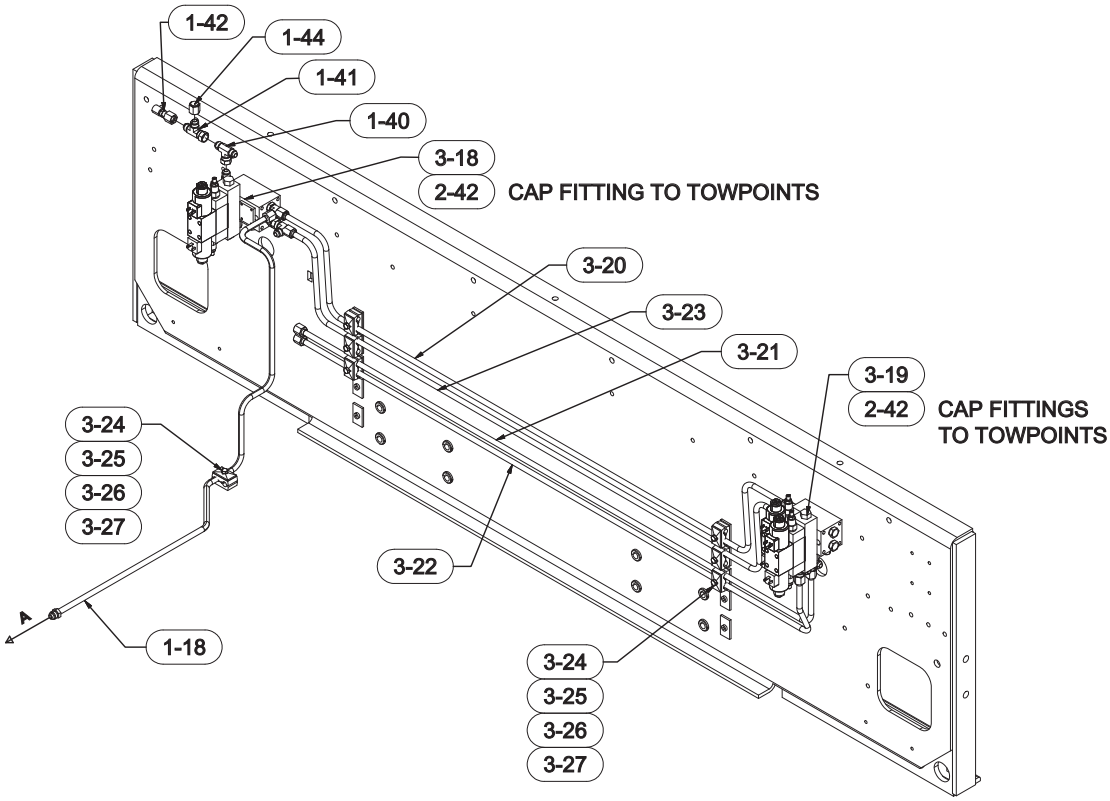

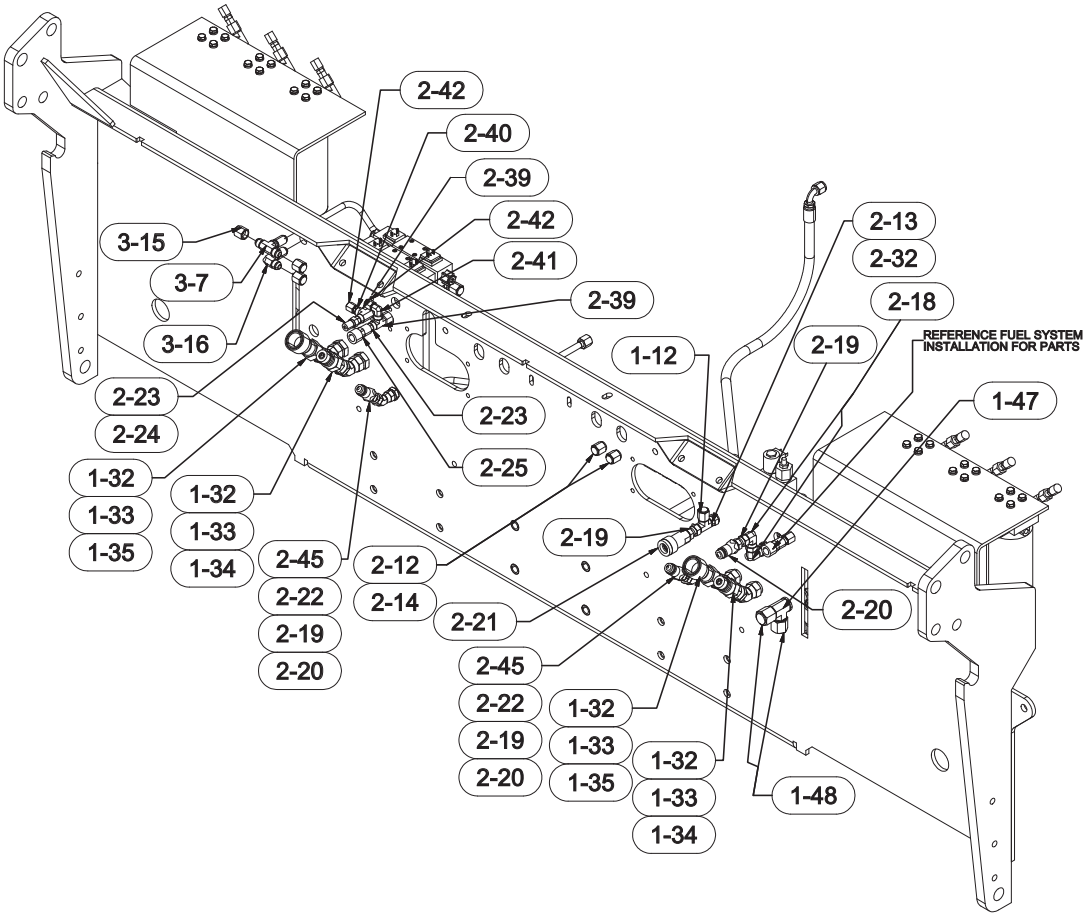

Return to Table of Contents Page

TEREX
CEDARAPIDS

Basket Plumbing

Parts List No. 05231LDD

Ref #	Part Number	REV	Part Name	Description	Qty
-	0970665014	A	ASSEMBLY DRAWING	BASKET PLUMBING 662 ROADMIX	REF
103	07014017		WASHER	5/16"	2
104	0970465669	-	VALVE	BRAKE/RANGE SHIFT	1
105	07383026		CAPSCREW	5/16" NC X 2"	2
106	07014002		WASHER	5/16" LOCK	2
108	07430275		ELBOW	#6SAEM X #6JICM 90D	3
109	07430277		ELBOW	9/16"SAE 1/2"JIC	1
110	4525901203	A	FITTING	ORIFICE 5/64" DIA	2
113	0765202235	A	HOSE ASSY	1/2" ID X 22"	1
114	0970406427	A	TUBE ASSY	BRAKE DRAIN	1
117	0970466275	A	TUBE ASSY	SCREED LIFT DRA	1
118	0970466274	A	TUBE ASSY	AUX-FRONT	1
119	0970466001	B	TUBE ASSY	AUX. CKT. REAR	1
126	07014020		WASHER	1/2"	4
127	07383070		CAPSCREW	1/2"NC X 1-1/2	4
128	07014005		WASHER	1/2" LOCK	4
129	07012027		HEX NUT	1/2" NC	4
132	07430427		FITTING	3/4"JIC SWIVEL	4
133	07430435		CONNECTOR	3/4"MPT X 3/4"J	4
134	4519150430	A	COUPLER	MALE 3/4"FPT	2
135	4519150431	A	COUPLER	FEMALE 3/4"FPT	2
140	07430356		TEE	1/2"JIC SWIVEL NUT	1
141	07430345		TEE	1/2"JIC SWIVEL NUT	1
142	4508052716	-	FITTING	TEST 1/2"JIC	1
144	07430229		CAP	1/2"	1
147	07430438		TEE	#12 RUN BULKHD	1
148	07430231		CAP	3/4" JIC	2
149	0765302435	A	HOSE ASSY	3/4" ID X 24"	1
203	0970865027	B	SUB-ASSEMBLY	LH FILTER *(See Form 24776)*	1
204	0970865028	B	SUB-ASSEMBLY	RH FILTER *(See Form 24777)*	1
212	07430229		CAP	1/2"	5
213	07430345		TEE	1/2"JIC SWIVEL NUT	1
214	07430392		ELBOW	1/2" BULKHD	2
215	07430468	-	CONNECTOR	ORING 1/2JIC	1
218	07430405		ELBOW	1/2" SWIVEL	2
219	07430413		CONNECTOR	1/2"MPT 1/2"JIC	4
220	451915040104	A	NIPPLE	1/2" FEMALE PIPE	3
221	451915040103	A	COUPLER	1/2" FEMALE PIPE	1
222	07430414		ELBOW	1/2"JIC SWIVEL	2
223	4572077021	-	NIPPLE	1/4" X 1/4"	2
224	451915041402	A	NIPPLE	COUPLING	1
225	451915041401	A	COUPLER	1/4"QD	1
228	4525201428		VALVE	VENTABLE RELIEF ASSEMBLY	1
	452520142801		VALVE	RELIEF CARTRIDGE *(Not Shown)*	1
	452520142802		VALVE	SOLENOID CARTRIDGE *(Not Shown)*	1
	452520142803		COIL	SOLENOID VALVE *(Not Shown)*	1
229	07430401		CONNECTOR	#8OR X1/2JIC FS	1
230	07430345		TEE	1/2"JIC SWIVEL NUT	1

CONTINUED

Return to Table of Contents Page

TEREX
CEDARAPIDS

Basket Plumbing

Parts List No. 05231LDD

Ref #	Part Number	REV	Part Name	Description	Qty
231	4572077512	-	REDUCER	#12MSAE X #8FSAE	1
232	07430367		UNION	1/2"JIC BULKHD	2
233	07430356		TEE	1/2"JIC SWIVEL NUT	2
234	07430257		CONNECTOR	1-1/16"SAE 1/2"	1
235	0970466378		TUBE ASSY	VIBRATOR VALVE	1
236	4508052716	-	FITTING	TEST 1/2"JIC	1
239	4572077538	A	TEE	1/4" PIPE STEEL RUN	2
240	07430004		CONNECTOR	1/4"P X #6 JIC	1
241	07430019		ELBOW	1/4"PIPE X #6 JIC	1
242	07430228		CAP	3/8"JIC	6
245	07430367		UNION	1/2"JIC BULKHD	2
246	0765201835	A	HOSE ASSY	1/2" ID X 18"	2
247	0765202235	A	HOSE ASSY	1/2" ID X 22"	1
248	07430385		UNION	1/2"	1
303	0970466282	A	VALVE ASSY	SCREED LIFT *(See Form 23368)*	1
304	0970466177	C	TUBE ASSY		1
305	0970465632	D	TUBE ASSY	SCREED LOWER	1
306	07430405		ELBOW	1/2" SWIVEL	3
307	07430393		TEE	1/2" BULKHD	1
314	07430356		TEE	1/2"JIC SWIVEL NUT	1
315	07430229		CAP	1/2"	4
316	07430392		ELBOW	1/2" BULKHD	1
318	0970466280	C	VALVE ASSEMBLY	L.H. FRONT *(See Form 23369)*	1
319	0970466379		VALVE ASSEMBLY	R.H. FRONT *(See Form 24778)*	1
320	0970465972	B	TUBE ASSY	FR BASKET PRESS	1
321	0970465633	C	TUBE ASSY	UPPER HOPPER WING	1
322	0970465634	B	TUBE ASSY	LOWER HOPPER WING	1
323	0970465973	C	TUBE ASSY	FR BASKET RETURN	1
324	4508052923	-	CLAMP HALF	FOR 1/2" TUBE	16
325	4508052926	-	PLATE	COVER FOR CLAMP	8
326	07383024		CAPSCREW	5/16"NC X 1-1/2	8
327	07014002		WASHER	5/16" LOCK	8
329	07430255		CONNECTOR	#8MSAE X #8MJIC	1
332	07430369		UNION	3/4"JIC BULKHD	2
333	07430427		FITTING	3/4"JIC SWIVEL	2
334	07430430		CONNECTOR	3/4" BULKHD	2

Return to Table of Contents Page

TEREX
CEDARAPIDS

LH Charge Filter Sub-Assembly

Part No. 0970865027

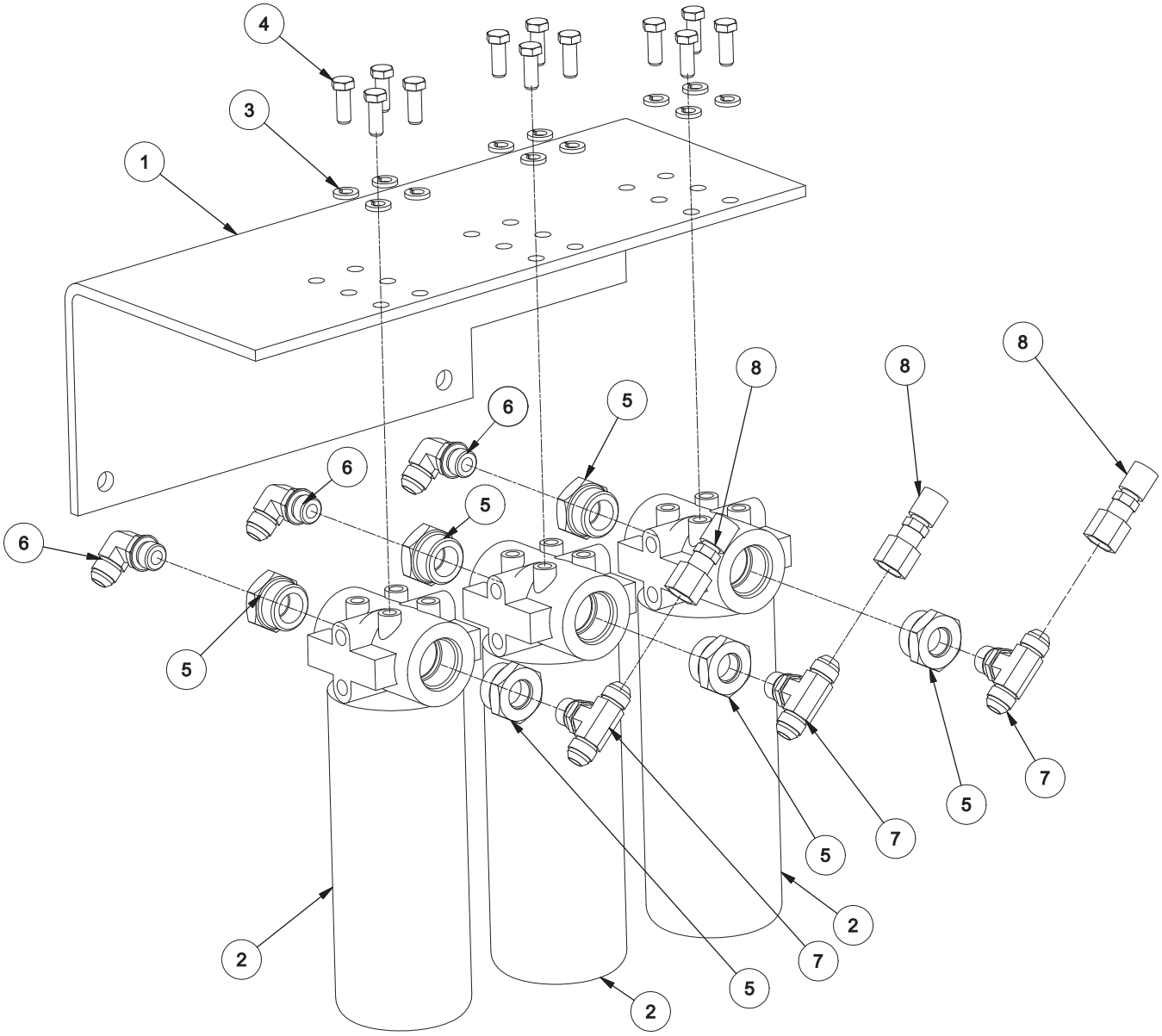

Ref #	Part Number	REV	Part Name	Description	Qty
1	09706-650-12		PLATE	LH FILTER BRKT	1
2	45175-001-41		FILTER	SPIN ON	3
3	07014-003		WASHER	3/8" LOCK	12
4	07383-038		CAPSCREW	3/8" NC X 1"	12
5	45720-775-28		REDUCER	#16SAEM X #8SAEF	6
6	07430-278		ELBOW	#8SAE #8JIC	3
7	07430-303		TEE	#8 JIC BRANCH	3
8	45080-527-16		FITTING	TEST 1/2"JIC	3

Return to Table of Contents Page

TEREX
CEDARAPIDS

RH Charge Filter Sub-Assembly

Part No. 0970865028

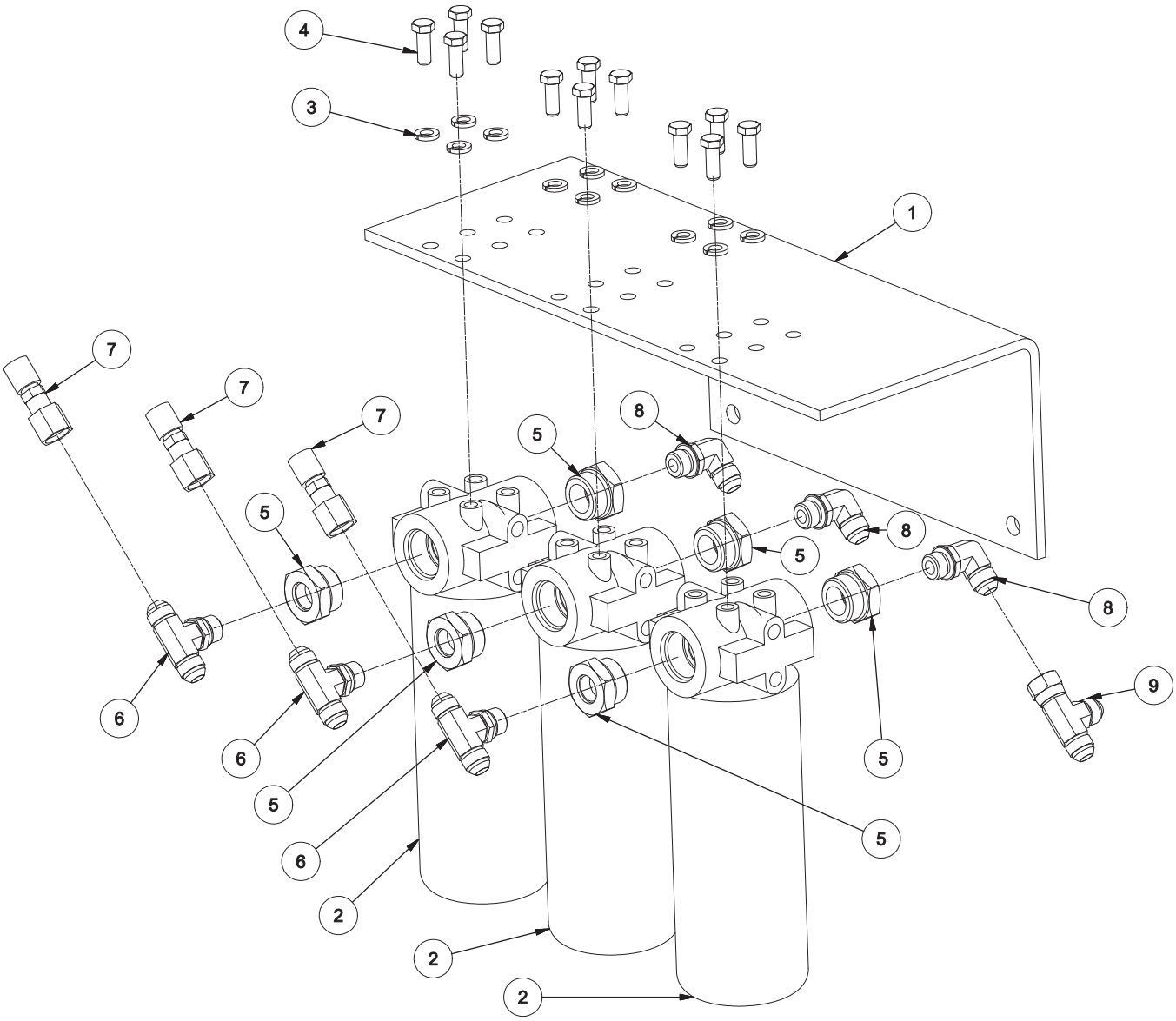

Ref #	Part Number	REV	Part Name	Description	Qty
1	09706-650-13		PLATE	RH FILTER BRKT	1
2	45175-001-41		FILTER	SPIN ON	3
3	07014-003		WASHER	3/8" LOCK	12
4	07383-038		CAPSCREW	3/8" NC X 1"	12
5	45720-775-28		REDUCER	#16SAEM X #8SAEF	6
6	07430-303		TEE	#8 JIC BRANCH	3
7	45080-527-16		FITTING	TEST 1/2"JIC	3
8	07430-278		ELBOW	#8SAE #8JIC	3
9	07430-345		TEE	1/2"JIC SWIVEL NUT	1

Return to Table of Contents Page

TEREX
CEDARAPIDS

Valve Assembly - Screed Lift

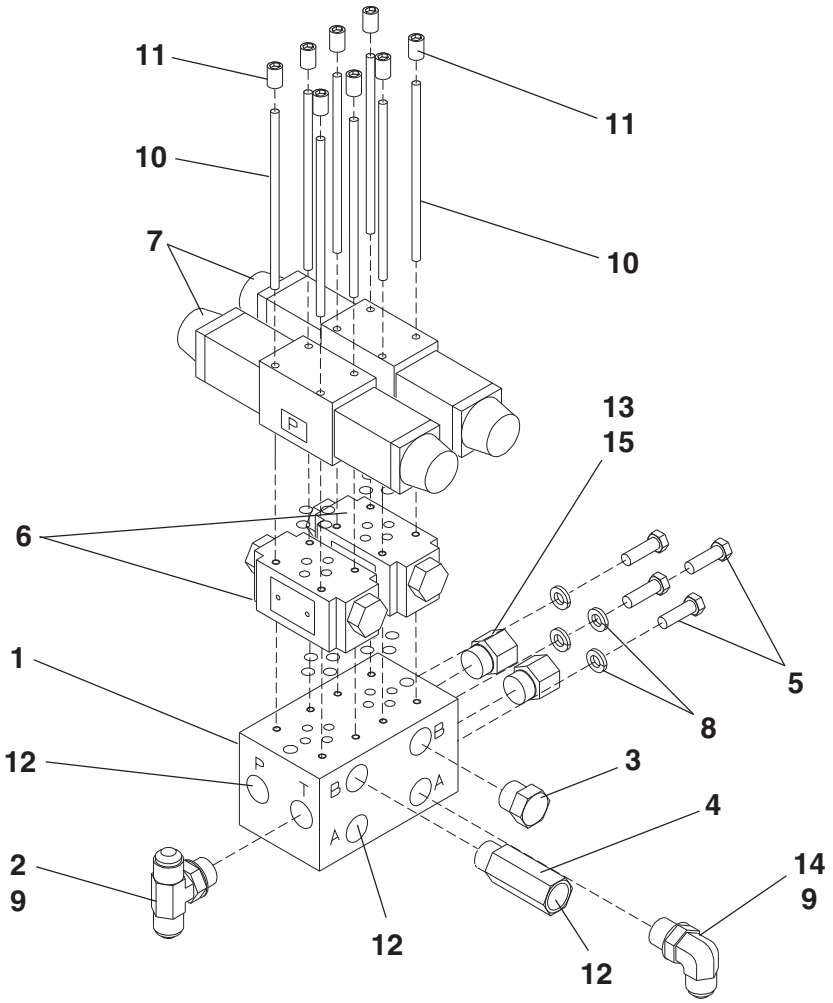

Ref. No.	Part Number	Description	Quantity
	9704-662-82	Valve Assembly - Complete	-
1	45252-501-03	Block, Valve	1
2	7430-303	Tee, 3/4" x 1/2" Branch - with #16 O-Ring	1
3	7430-382	Plug, 3/4" - with #16 O-Ring	1
4	45090-001-46	Valve, Throttle	1
5	7383-022	Capscrew, 5/16" NC x 1"	4
6	45252-014-16	Valve, Holding - with O-Rings	2
7	45252-005-53	Valve, Solenoid - with O-Rings	2
8	7014-002	Lockwasher, 5/16"	4
9	45191-509-10	Caplugs, 3/4" (Not Shown)	3
10	45890-501-23	Stud, #10-24 x 2-7/8"	8
11	45890-100-23	Studnut	8
12	45191-509-09	Caplugs	3
13	45720-775-29	Fitting, 3/4" x 1/4'" - with #16 O-Ring	2
14	7430-278	Elbow, 90° 3/4" x 1/2" - with #16 O-Ring	1
15	45191-509-05	Caplugs	2
16	45259-508-14	O-Ring, 3/4" (For hydraulic fittings)	As Req

Return to Table of Contents Page

TEREX
CEDARAPIDS

Valve Assembly
Left Hand Front Bulkhead

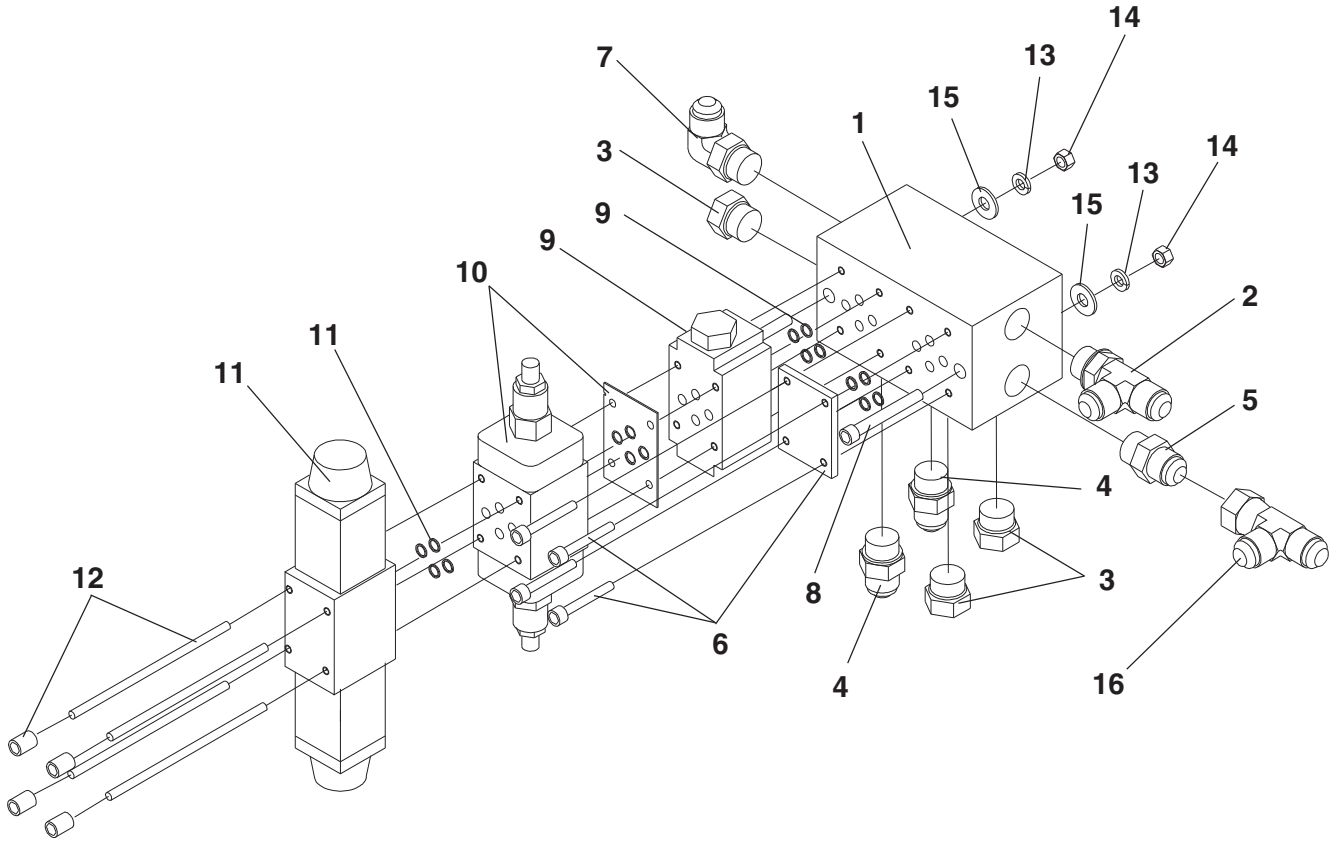

Ref. No.	Part Number	Description	Quantity
	9704-662-80	Valve Assembly - Complete	-
1	45252-501-03	Block, Valve	1
2	7430-292	Tee, 1/2" Run - with #17 O-Ring	1
3	7430-382	Plug, 3/4" - with #18 O-Ring	3
	45259-508-14	O-Ring, 3/4" (For above fitting)	As Req
4	7430-253	Connector, 3/4" x 3/8" - with #18 O-Ring	2
5	7430-255	Connector, 3/4" x 1/2" - with #18 O-Ring	1
6	45252-503-02	Cover Plate (Includes Hardware & O-Rings)	1
7	7430-278	Elbow, 90° 3/4" x 1/2" - with #18 O-Ring	1
8	7025-088	Capscrew, 5/16" x 3" Sockethead	2
9	45252-014-16	Valve, Holding - with O-Rings	1
10	45252-007-38	Valve, Flow Control	1
11	45252-005-53	Valve, Solenoid - with O-Rings	1
12	9704-663-01	Bolt Kit	1
13	7014-002	Lockwasher, 5/16"	2
14	7012-024	Hex Nut, 5/16"	2
15	7014-017	Washer, 5/16"	2
16	7430-345	Tee, 1/2" Swivel Nut	1
17	45259-508-46	O-Ring, 1/2" (For hydraulic fittings)	As Req
18	45259-508-14	O-Ring, 3/4" (For hydraulic fittings)	As Req

Return to Table of Contents Page

TEREX
CEDARAPIDS

Valve Assembly
Right Hand Front Bulkhead

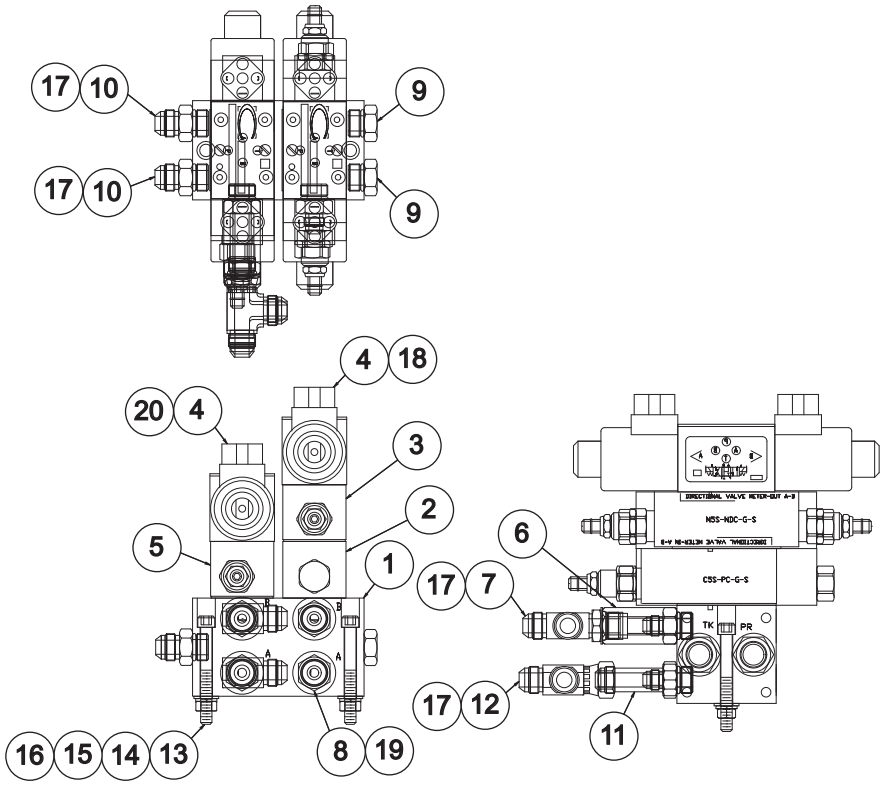

Ref. No.	Part Number	Description	Quantity
	9704-663-79	Valve Assembly - Complete	-
1	45252-501-03	Block, Valve	1
2	45252-014-10	Valve, Holding - with O-Rings	1
3	45252-007-20	Valve, Flow Control	1
4	45252-005-53	Valve, Solenoid - with O-Rings	2
5	45252-007-39	Valve, Needle - with O-Rings	1
6	45090-001-46	Valve, Throttle	1
7	7430-292	Tee, 1/2" Run - with #18 O-Ring	1
8	7430-253	Connector, 3/4" x 3/8" - with #19 O-Ring	2
9	7430-382	Plug, 3/4" - with #19 O-Ring	2
10	7430-255	Connector, 3/4" x 1/2" - with #19 O-Ring	2
11	45720-775-82	Fitting, 1/2"	1
12	7430-345	Tee, 1/2" Swivel Nut - Male Branch	1
13	7025-088	Capscrew, 5/16" x 3"Sockethead	2
14	7014-002	Lockwasher, 5/16"	2
15	7012-024	Hex Nut, 5/16"	2
16	7430-017	Washer, 5/16"	2
17	45191-509-10	Caplug, 3/4 -16	6
18	9704-661-97	Bolt Kit - 4.13" - Studs & Nuts	1
19	45191-509-07	Caplug, #6	2
20	9704-661-98	Bolt Kit - 2.50" - Studs & Nuts	1
21	45259-508-46	O-Ring, 1/2" (For hydraulic fittings)	As Req
22	45259-508-14	O-Ring, 3/4" (For hydraulic fittings)	As Req

TEREX
CEDARAPIDS

Conveyor Electrical Components

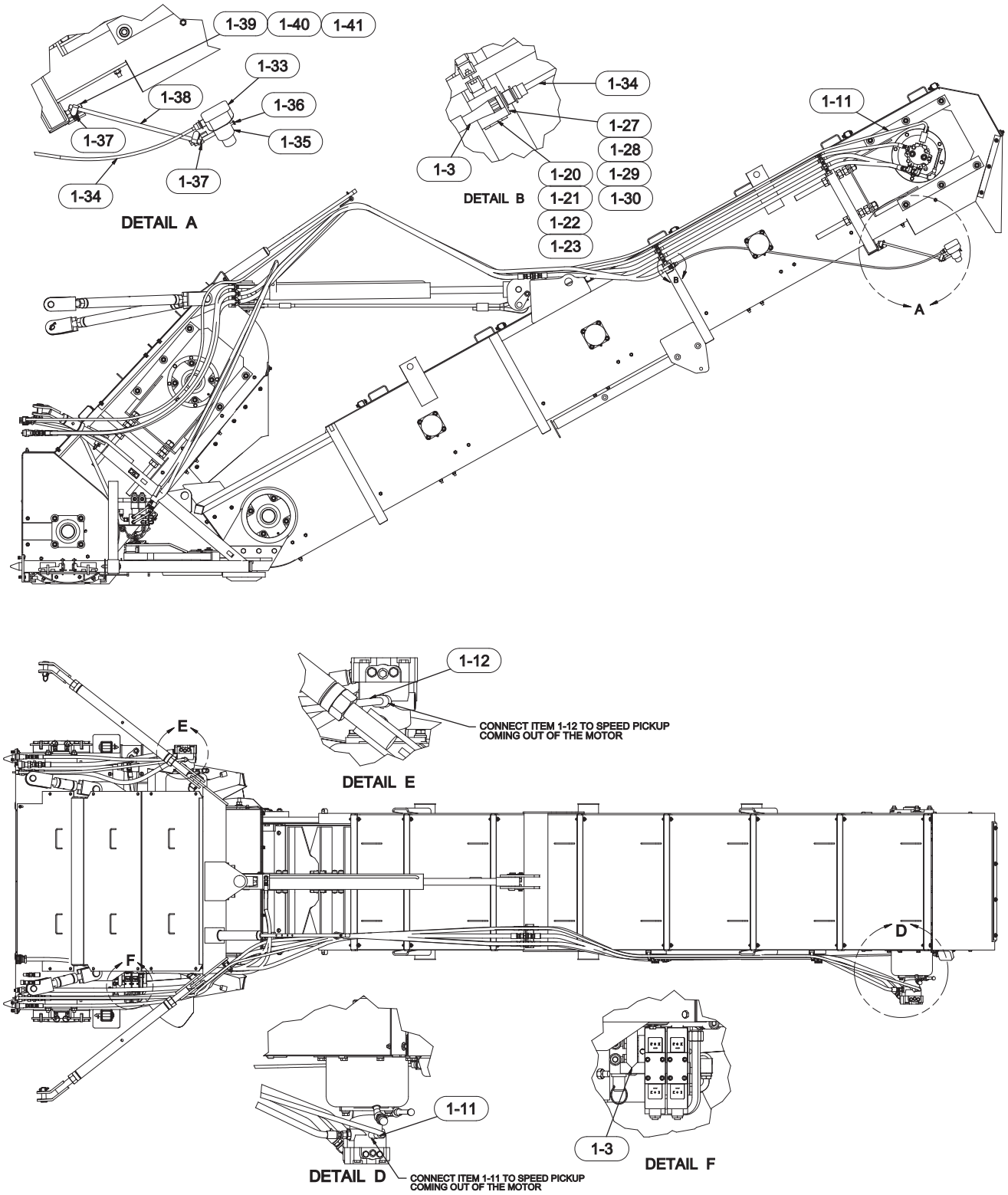

TEREX
CEDARAPIDS

Conveyor Electrical Components

Parts List No. 05231JBA

Ref #	Part Number	REV	Part Name	Description	Qty
-	0970640007	A	ASSEMBLY DRAWING	ROADMIX CONVEYOR ELECTRICAL	REF
103	0970641003	B	HARNESS	ROADMIX CONVEYOR	1
111	0970641005	-	CABLE	LOADOUT CONVEYOR SPEED	1
112	0970641004	-	CABLE	TRANSFER CONVEYOR SPEED	1
114	07014005		WASHER	1/2" LOCK	2
120	07383018		CAPSCREW	5/16"NC X 1/2"	1
121	07014001		WASHER	1/4" LOCK	1
122	0970641006		BRACKET	RECEPTACLE MTG	1
123	4508052920	A	PLATE	2-5/8"TUBE	1
127	4631300250	-	COVER	#14 CAP & CHAIN	1
128	07504007		MACH SCREW	#4-40 1/2" UND	4
129	07438019		WASHER	#4 SHKP LK	4
130	07440005		HEX NUT	#4 NC	4
133	4606110033	A	CONTROLLER	ULTRASONIC	1
134	4606155013	-	CABLE	SLOPE SENSOR 6 COND	1
135	0970445264	A	MOUNT	SENSOR	1
136	07383004		CAPSCREW	1/4"NC X 3/4"	1
137	4618500120	-	CLAMP	ADJ SWIVEL	2
138	0970445263	A	ROD	EXTENSION	1
139	0970445262	A	STUD	GATE MOUNT	1
140	07012027		HEX NUT	1/2" NC	2

TEREX
CEDARAPIDS

Conveyor Hydraulic Plumbing

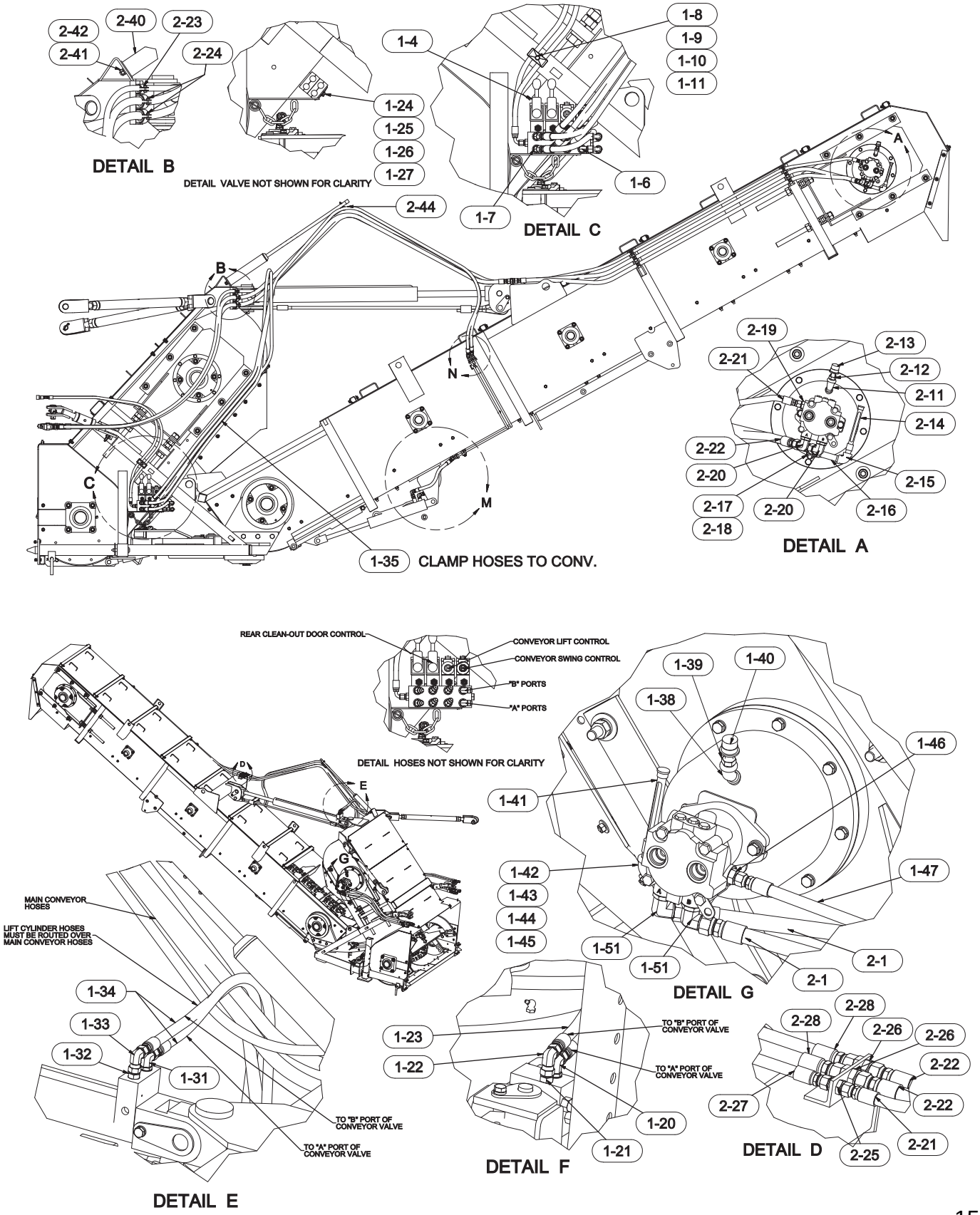

TEREX
CEDARAPIDS

Conveyor Hydraulic Plumbing

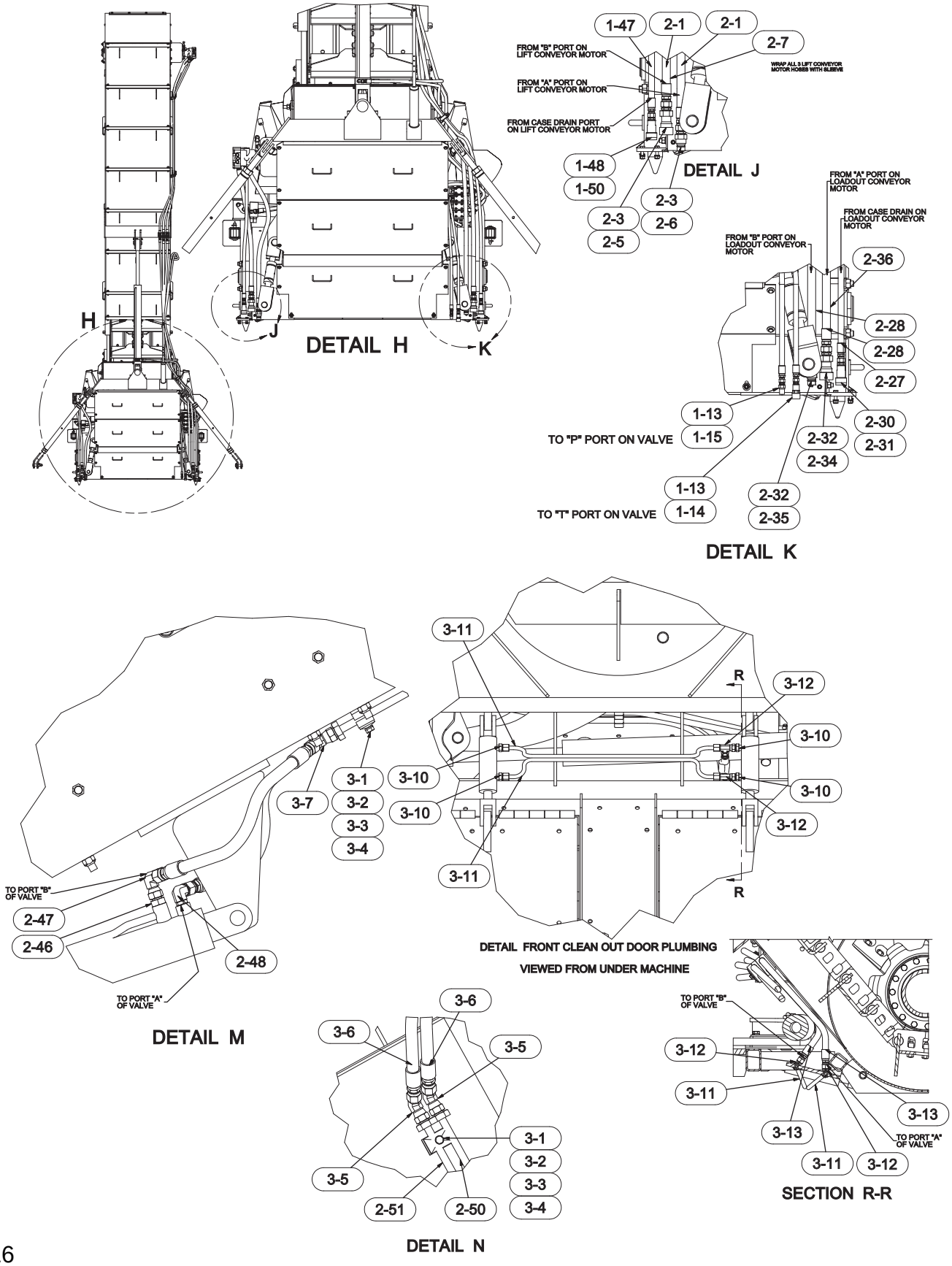

TEREX
CEDARAPIDS

Conveyor Hydraulic Plumbing

Parts List No. 05231LAC

Ref #	Part Number	REV	Part Name	Description	Qty
-	0970665007	C	ASSEMBLY DRAWING	CONVEYOR PLUMBING	REF
104	0970665016		VALVE ASSEMBLY	CONVEYOR CONTROL *(See Form 24781)*	1
106	07430405		ELBOW	1/2" SWIVEL	2
107	07430414		ELBOW	1/2"JIC SWIVEL	6
108	4508052936	-	CLAMP	HALF 7/8"ID TWIN	2
109	4508052927	-	PLATE	COVER FOR CLAMP	1
110	07014002		WASHER	5/16" LOCK	1
111	07383025		CAPSCREW	5/16"NC X 1-3/4	1
112	0765105235	A	HOSE ASSY	3/8" ID X 52"	2
113	07430004		CONNECTOR	1/4"P X #6 JIC	2
114	451915041401	A	COUPLER	1/4"QD	1
115	451915041402	A	NIPPLE	COUPLING	1
116	4519150807		SLEEVE	3"HOSEX36"LONG PRO	2
120	07430278		ELBOW	#8SAEM X #8JICM 90D	1
121	07430255		CONNECTOR	#8MSAE X #8MJIC	1
122	07430405		ELBOW	1/2" SWIVEL	1
123	0765206235	A	HOSE ASSY	1/2" ID X 62"	2
124	4508052936	-	CLAMP	HALF 7/8"ID TWIN	4
125	4508052927	-	PLATE	COVER FOR CLAMP	1
126	07014002		WASHER	5/16" LOCK	1
127	07383031		CAPSCREW	5/16"NC X 3-1/4	1
131	07430278		ELBOW	#8SAEM X #8JICM 90D	1
132	07430255		CONNECTOR	#8MSAE X #8MJIC	1
133	07430405		ELBOW	1/2" SWIVEL	1
134	0765209633	A	HOSE ASSY	1/2" ID X 96"	2
135	07509011		CLAMP	1-3/8"	2
138	07286004		ELBOW	1/2" 45D STREET	1
139	4572076905	-	FITTING	1/2"NPT X 1/4"NPT	1
140	07052021		FITTING	GREASE	1
141	4586500133	B	GAUGE		1
142	07085004		ELBOW	90D-1/2"	1
143	405030035001	A	PIPE	1/2"DIA X 3-1/2"TBE	1
144	4572077501	-	TEE	1/2"	1
145	07027003		DRAIN PLUG	3/4"	1
146	07430256		CONNECTOR	#10SAE #8JIC	1
147	0765204633	A	HOSE ASSY	1/2" ID X 46"	1
148	07430007		CONNECTOR	1/2"NPT-1/2"JIC	1
150	4519150401	C	COUPLER	1/2"	1
151	07430282		ELBOW	#12SAEM-#12JICM 90D	2
201	0768304633	-	HOSE ASSY	3/4" ID X 46"	2
203	07430051		CONNECTOR	3/4"NPT-3/4"JIC	2
205	4519150431	A	COUPLER	FEMALE 3/4"FPT	1
206	4519150430	A	COUPLER	MALE 3/4"FPT	1
207	4519150807		SLEEVE	3"HOSEX36"LONG PRO	2

CONTINUED

TEREX
CEDARAPIDS

Conveyor Hydraulic Plumbing

Parts List No. 05231LAC

Ref #	Part Number	REV	Part Name	Description	Qty
211	07286004		ELBOW	1/2" 45D STREET	1
212	4572076905	-	FITTING	1/2"NPT X 1/4"NPT	1
213	07052021		FITTING	GREASE	1
214	4586500133	B	GAUGE		1
215	07085004		ELBOW	90D-1/2"	1
216	405030035001	A	PIPE	1/2"DIA X 3-1/2"TBE	1
217	4572077501	-	TEE	1/2"	1
218	07027003		DRAIN PLUG	3/4"	1
219	07430256		CONNECTOR	#10SAE #8JIC	1
220	07430282		ELBOW	#12SAEM-#12JICM 90D	2
221	0765211433	A	HOSE ASSY	1/2" ID X 114"	1
222	0768311433	-	HOSE ASSY	3/4" ID X 114	2
223	4508052918	-	CLAMP	3/4"TUBE	3
224	4508052908	-	CLAMP	1-1/4"	6
225	07430367		UNION	1/2"JIC BULKHD	1
226	07430369		UNION	3/4"JIC BULKHD	2
227	0765218333	A	HOSE ASSY	1/2" ID X 183"	1
228	0768317333	-	HOSE ASSY	3/4" ID X 173	2
230	07430007		CONNECTOR	1/2"NPT-1/2"JIC	1
231	4519150401	C	COUPLER	1/2"	1
232	07430051		CONNECTOR	3/4"NPT-3/4"JIC	2
234	4519150431	A	COUPLER	FEMALE 3/4"FPT	1
235	4519150430	A	COUPLER	MALE 3/4"FPT	1
236	4519150807		SLEEVE	3"HOSEX36"LONG PRO	2
240	4519150806	E	SUPPORT	HOSE SCREED EXTEN	1
241	07014005		WASHER	1/2" LOCK	1
242	07012027		HEX NUT	1/2" NC	1
243	4519100448	A	CLAMP	TIE DOWN	1
246	07430254		CONNECTOR	#8MSAE X #6MJIC	1
247	07430405		ELBOW	1/2" SWIVEL	1
248	07430277		ELBOW	9/16"SAE 1/2"JIC	1
249	0765202433	A	HOSE ASSY	1/2" ID X 24"	2
250	0970665009		TUBE ASSY	CLEAN OUT DOOR	1
251	0970665010		TUBY ASSY	CLEAN OUT DOOR	1
301	4508052923	-	CLAMP HALF	FOR 1/2" TUBE	4
302	4508052926	-	PLATE	COVER FOR CLAMP	2
303	07014002		WASHER	5/16" LOCK	2
304	07383025		CAPSCREW	5/16"NC X 1-3/4	2
305	07430414		ELBOW	1/2"JIC SWIVEL	2
306	0765218333	A	HOSE ASSY	1/2" ID X 183"	2
307	07430414		ELBOW	1/2"JIC SWIVEL	2
310	07430254		CONNECTOR	#8MSAE X #6MJIC	4
311	0970665011		TUBY ASSY	CLEAN OUT DOOR	2
312	07430345		TEE	1/2"JIC SWIVEL NUT	2
313	0765206933	-	HOSE ASSY		2

TEREX
CEDARAPIDS

Conveyor Control Valve Assembly

Part No. 0970665016

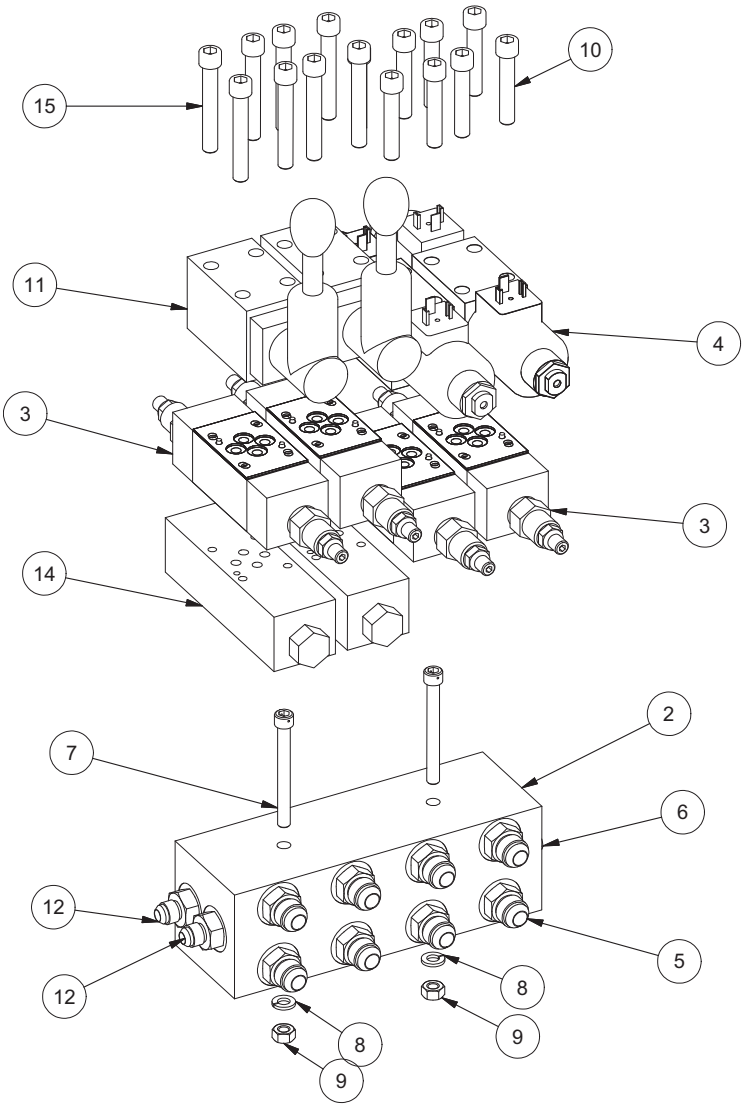

Ref #	Part Number	REV	Part Name	Description	Qty
2	45252-501-11		MANIFOLD		1
3	45252-007-20		VALVE	FLOW CONTROL	4
4	45252-005-53		VALVE	SOLENOID	2
5	07430-255		CONNECTOR	#8 OR X 1/2"JIC	8
6	07430-382		PLUG	#8 SAE	2
7	07025-088		CAPSCREW	SCH 5/16" NC X 3"	2
8	07014-002		WASHER	5/16" LOCK	2
9	07012-024		HEX NUT	5/16 UNC	2
10	09704-661-98		BOLT KIT		2
11	45252-005-63		CONTROL	MANUALLY OPERATED	2
12	07430-253		CONNECTOR	#8 SAE X 3/8" JIC	2
14	45252-014-10		VALVE	DUAL PILOT CHECK	2
15	09704-661-97		BOLT KIT	4.13" - STUDS AND NUTS	2

TEREX
CEDARAPIDS

Conveyor Guard Rail Assembly

Parts List 05231AFA

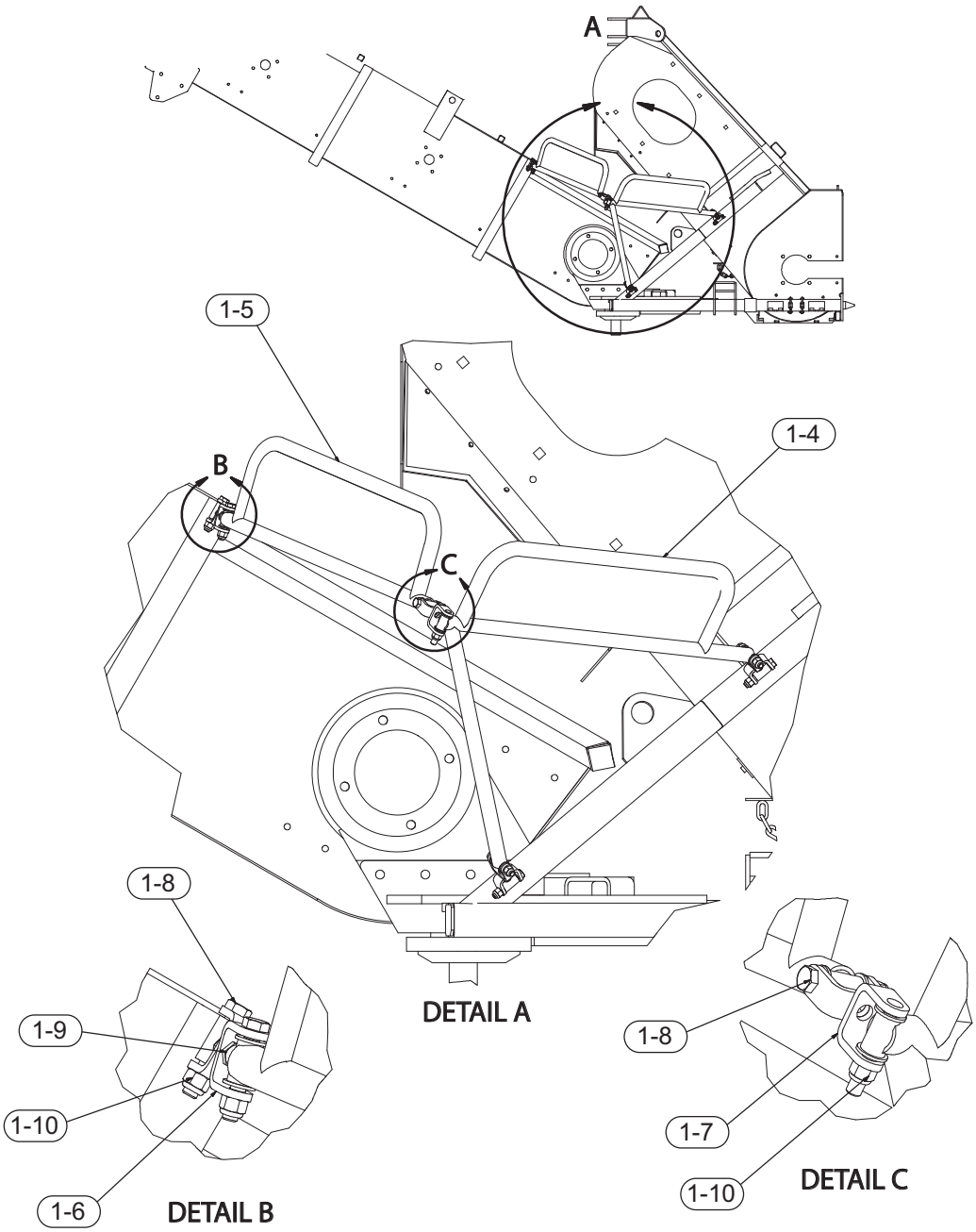

Ref #	Part Number	REV	Part Name	Description	Qty
-	0970645181		ASSEMBLY DRAWING	CONVEYOR GUARD RAIL	REF
-	0970945008		KIT	CONVEYOR GUARD	1
1-4	0970645169		GUARD	CONVEYOR RAILING	2
1-5	0970645170		GUARD	CONVEYOR GUARD	2
1-6	0970645171		PLATE	U-JOINT HALF	12
1-7	0970645180		U-JOINT	WELDED U-JOINT	2
1-8	07383076		CAPSCREW	1/2"NC X 3"	16
1-9	07383069		CAPSCREW	1/2"NC X 1-1/4"	6
1-10	07386005		HEX NUT	1/2" LOCK	22

Return to Table of Contents Page

TEREX CEDARAPIDS

Table of Contents

RoadMix Conveyor Assembly - 05231BAE

Ref No.	Description	Page No.
1	RoadMix Conveyor Assembly Illustration	2
2	RoadMix Conveyor Assembly Parts List	3
3	Lift Conveyor Lower Shaft Assembly	4
4	Lift Conveyor Upper Shaft Assembly Illustration	5
5	Lift Conveyor Upper Shaft Assembly Parts List	6
6	Lift Conveyor Liners Assembly	7
7	Lift Conveyor Frame Assembly	8
8	Loadout Conveyor Covers Assembly	9
9	Loadout Conveyor Lower Shaft Assembly Illust.	10
10	Loadout Conveyor Lower Shaft Assembly P/L	11
11	Loadout Conveyor Upper Shaft Assembly Illust.	12
12	Loadout Conveyor Upper Shaft Assembly P/L	13
13	Loadout Conveyor Liners Assembly	14

Return to Table of Contents Page

TEREX CEDARAPIDS

RoadMix Conveyor Assembly

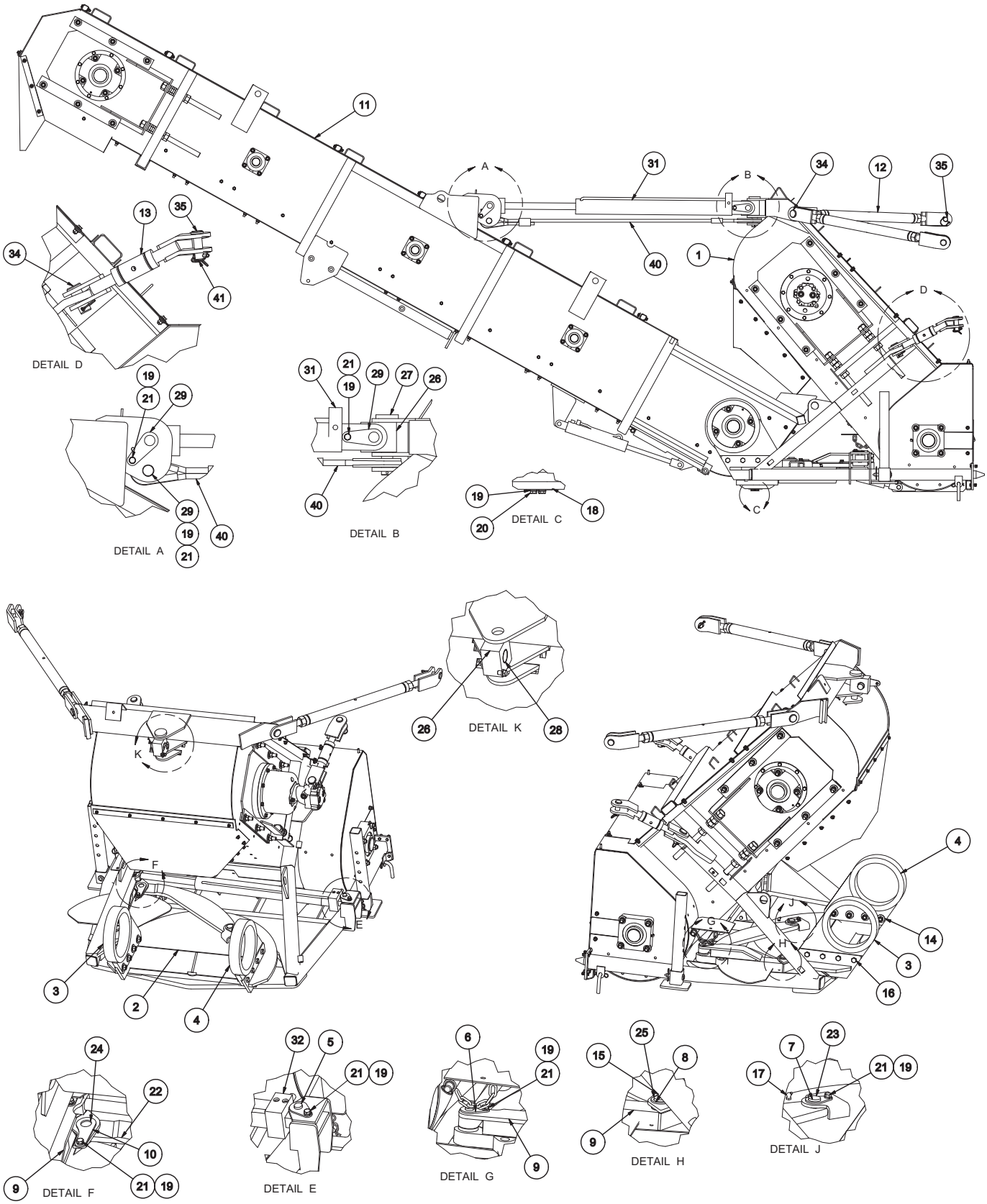

Return to Table of Contents Page

TEREX
CEDARAPIDS

RoadMix Conveyor Assembly

Parts List No. 05231BAE

Ref #	Part Number	REV	Part Name	Description	Qty
-	09706-451-67	B	ASSEMBLY	ROADMIX CONVEYOR	REF
1	09706-451-66		ASSEMBLY	LOWER LIFT CONVEYOR *(See Form 24784)*	1
2	09706-450-64		FRAME	MAIN CONVEYOR SUPPORT	1
3	09706-450-65		SUPPORT, LH	MAIN CONVEYOR	1
4	09706-450-66		SUPPORT, RH	MAIN CONVEYOR	1
5	09706-450-78		PIN	LINKAGE SWING	1
6	09706-450-77		PIN	LINKAGE	1
7	09706-450-76		PIN	LINKAGE SWING	1
8	09706-450-74		PIN	LINKAGE SWING	1
9	09706-450-68		LINK	MAIN CONVEYOR SWING	1
10	09706-450-75		PIN	LINKAGE SWING	1
11	09706-451-61		ASSEMBLY	MAIN CONVEYOR FRAME *(See Form 24789)*	1
12	09706-450-57		TURNBUCKLE	TOP ASSEMBLY	2
13	09706-450-58		TURNBUCKLE	LOWER ASSEMBLY	2
14	07014-023		WASHER	3/4" FLAT	8
15	07012-030		HEXNUT	3/4"NC	8
16	07383-119		CAPSCREW	3/4"UNC X 2-1/4"	8
17	07051-006		FITTING	GREASE 1/4" 67-1/2 DEG.	1
18	09706-451-08		CAP	RETAINING	1
19	07014-005		WASHER	1/2" LOCK	10
20	07383-070		CAPSCREW	1/2"NC X 1-1/2"	3
21	07383-066		CAPSCREW	1/2" NC X 3/4"	7
22	09706-450-67		LINK	COUPLER SWING	1
23	09706-450-70		BUSHING	BRONZE LENGTH 1.0 IN.	1
24	09706-450-69		BUSHING	BRONZE LENGTH 0.75	1
25	09706-450-71		BUSHING	BRONZE 1.75 IN. LENGTH	1
26	09706-450-82		COLLAR	CYL PIVOT	1
27	09706-450-81		PIN	PIVOT	1
28	07254-063		BEARING	1-11/16" X 1-1/2" OILITE	4
29	09706-450-80		PIN	CYLINDER CONVEYOR	3
31	09706-450-73		CYLINDER		1
32	09706-450-62		CYLINDER		1
34	09706-450-61		PIN	TRUNBUCKLE CONV END	4
35	09706-450-60		PIN	TRUNBUCKLE FRAME END	4
37	07383-040		CAPSCREW	3/8"NC X 1-1/2"	8
38	07012-025		HEXNUT	3/8" NC	8
39	07014-003		WASHER	3/8" LOCK	8
40	09706-450-83		CABLE-ASSY	SAFETY CABLE	1
41	09706-451-05		PIN	SAFETY ROUNDED RETAIN	8

Return to Table of Contents Page

TEREX
CEDARAPIDS

Lift Conveyor Lower Shaft Assembly

Part No. 0970645166

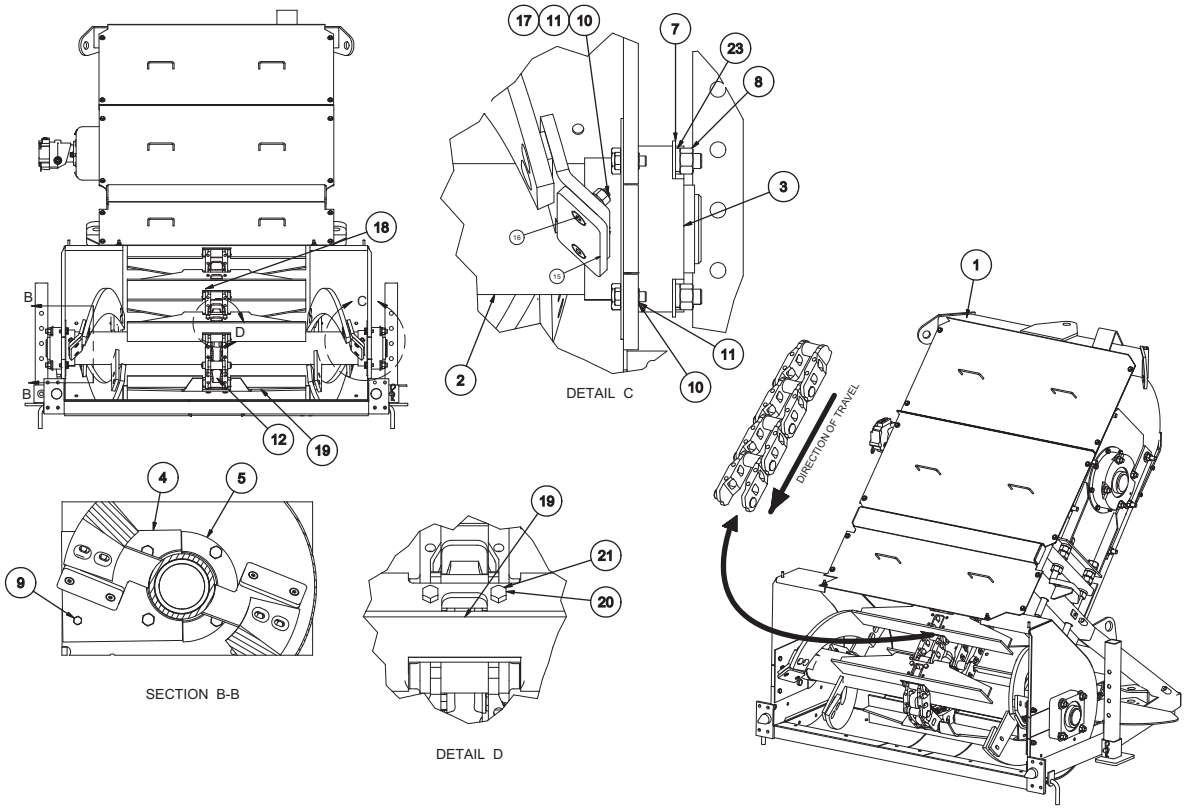

Ref #	Part Number	REV	Part Name	Description	Qty
1	0970645165	C	ASSEMBLY	LIFT CONV UPPER *(See Form 24785-24786)*	1
2	0970645121	E	SHAFT	AUGER ROADMIX	1
3	0970202538	A	BEARING	3-7/16" SPECIAL	2
4	0970645143		CVR PLT	LFT CVYR CVR PLT	2
5	0970645011	-	GUARD	AUGER-SHAFT UPPER	2
7	07014023		WASHER	3/4"	8
8	07012030		HEX NUT	3/4" NC	8
9	07383069		CAPSCREW	1/2"NC X 1-1/4"	4
10	07014005		WASHER	1/2" LOCK	12
11	07012027		HEX NUT	1/2" NC	12
12	0970645010	B	SPROCKET	8T	1
15	0970645104		LINER	AUGER SUPPORT ARM	4
16	07389048		CAPSCREW	SCH 1/2"NC X 2"	8
17	07014020		WASHER	1/2"	8
18	0970645048	B	CHAIN	27 PITCHES SIZE B1	1
19	0970645146	-	FLIGHT	MAIN CONVEYOR	13
20	4589030351	-	BOLT	12MM 1MM X 45MM	52
21	4589030216	-	SQUARE NUT		52
22	07383126		CAPSCREW	3/4" NC X 4" *(Not Shown)*	8
23	07014009		WASHER	3/4" LOCK	8
24	07051004		FITTING	GREASE 1/8" 90DEG *(Not Shown)*	2
25	07399042		CAPSCREW	2-1/2" NC GR 8 *(Not Shown)*	14
26	07465001		WASHER	1/2" HRD FLT *(Not Shown)*	14
27	4589010228	B	LOCKNUT	1/2"NC *(Not Shown)*	14

Return to Table of Contents Page

TEREX
CEDARAPIDS

Lift Conveyor Upper Shaft Assembly

Part No. 0970645165

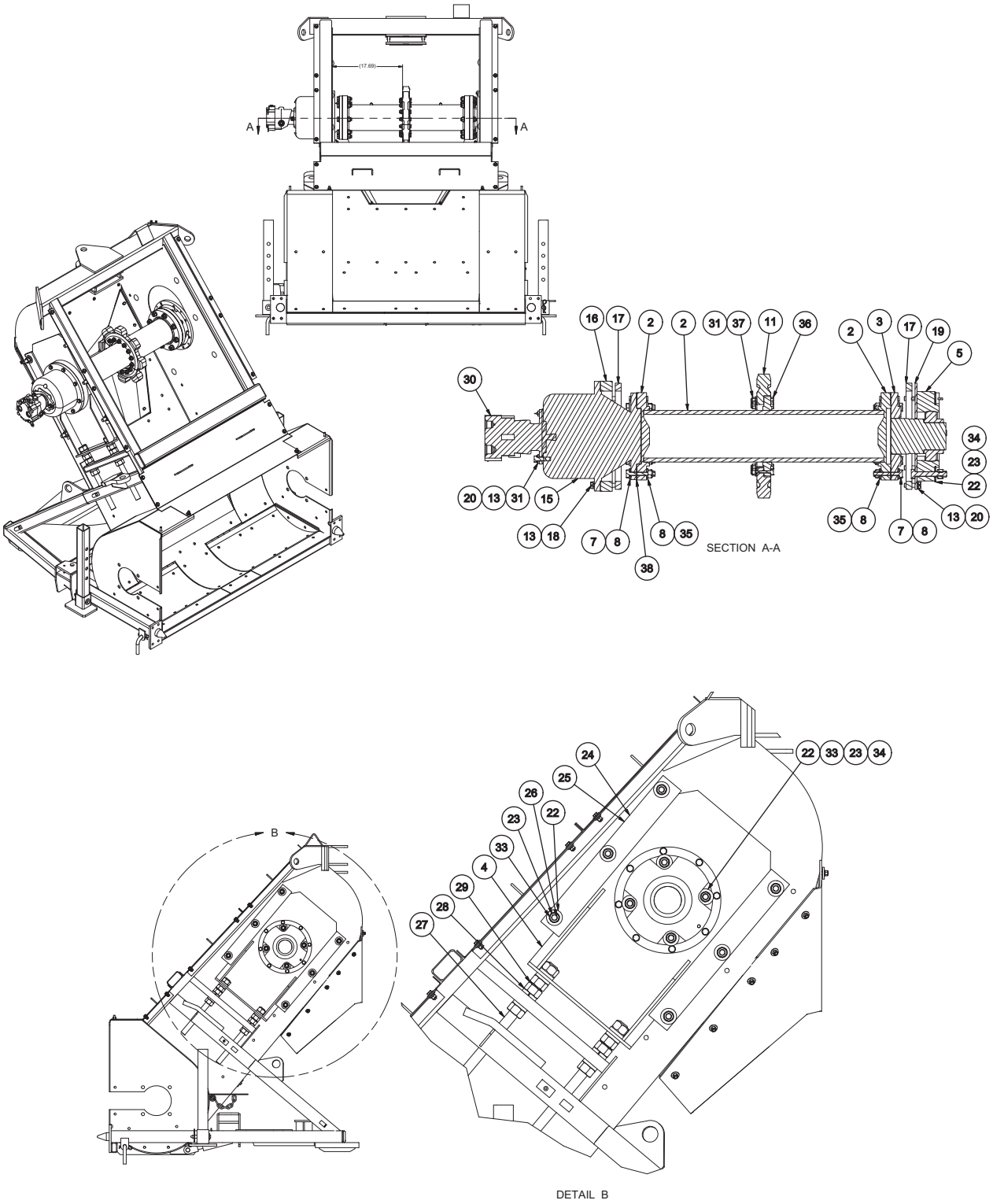

Return to Table of Contents Page

TEREX
CEDARAPIDS

Lift Conveyor Upper Shaft Assembly

Part No. 0970645165

Ref #	Part Number	REV	Part Name	Description	Qty
2	0970645124	B	SHAFT	MOTOR LIFT CONVEYOR	1
3	0970645018	-	ADAPTER	MOTOR SHAFT	1
4	0970645015	A	SLIDE WELD	GEARBOX CONVEYOR	2
5	0970645024	A	BEARING		1
7	07399005		CAPSCREW	5/8"NCX3-1/4"GR8	16
8	07465002		WASHER	5/8" HARDENED FLAT	32
10	0970645010	B	SPROCKET	8T	1
13	07014005		WASHER	1/2" LOCK	18
15	4563550023	-	GEARBOX	AUBURN MODEL 8	1
16	0970645020	-	SPACER	RING	1
17	0970645021	A	RING	BOLTING	2
18	07383078		CAPSCREW	1/2"NC X 3-1/2"	8
19	0970645023	-	PLATE	BEARING ADAPTER	1
20	07383071		CAPSCREW	1/2"NC X 1-3/4"	10
22	07014023		WASHER	3/4"	16
23	07012030		HEX NUT	3/4" NC	16
24	0970645109	-	BAR	MOTOR GUIDE	4
25	0970645110	A	BAR	SPACER	4
26	07072174		CARR BOLT	3/4"NC	12
27	07155059		ADJ BOLT	1-1/4"NC X16-1/2	4
28	07014013		WASHER	1-1/4" LOCK	16
29	07012034		HEX NUT	1-1/4" NC	12
30	4508000647	A	MOTOR		1
31	07465001		WASHER	1/2" HRD FLT	16
32	0970645164		ASSEMBLY	LINERS - LIFT CONVEYOR *(See Form 24787)*	1
33	07014009		WASHER	3/4" LOCK	16
34	07383126		CAPSCREW	3/4" NC X 4"	4
35	4589010229	B	LOCKNUT	5/8" NC	16
36	07399042		CAPSCREW	2-1/2" NC GR 8	14
37	4589010228	B	LOCKNUT	1/2"NC	14
38	0970645189		SHIM	LOADOUT CONVEYOR TAILSHAFT	2

Return to Table of Contents Page

TEREX CEDARAPIDS

Lift Conveyor Liners Assembly

Part No. 0970645164

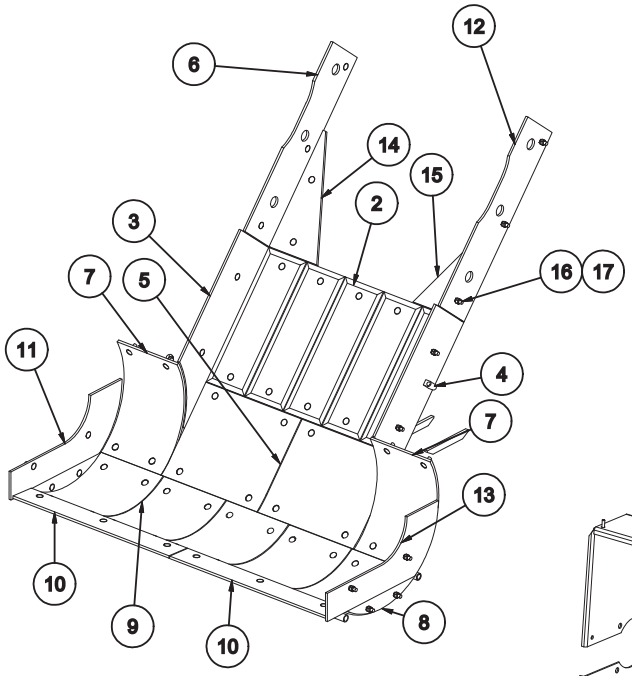

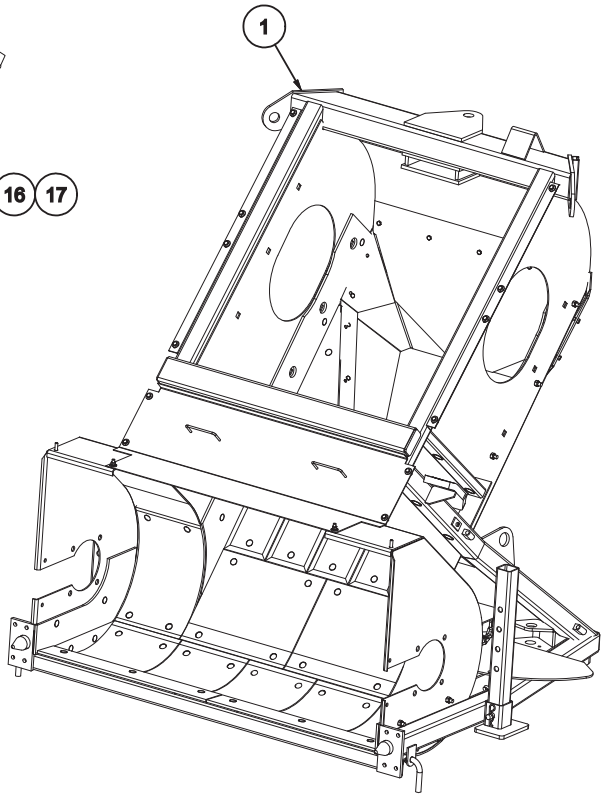

Ref #	Part Number	REV	Part Name	Description	Qty
1	0970645163	A	ASSEMBLY	LIFT CONVEYOR FRAME *(See Form 24788)*	1
2	0970210013	A	LINER	HIGH ALLOY	5
3	0970645031	-	LINER LH	LIFT CONVEYOR	1
4	0970645032	-	LINER RH	LIFT CONVEYOR	1
5	0970645039	-	LINER	SIDE-BOTTOM	2
6	0970645033	-	LINER LH	LIFT CONVEYOR	1
7	0970645038	-	LINER	BOTTOM	2
8	0970645087	-	LINER	CLEANOUT	2
9	0970645041	-	LINER	BOTTOM COVER	5
10	0970645028	-	LINER	BOTTOM	2
11	0970645035	A	LINER LH	LIFT CONVEYOR	1
12	0970645034	-	LINER RH	LIFT CONVEYOR	1
13	0970645036	A	LINER RH	LIFT CONVEYOR	1
14	0970645029	A	LINER LH	LIFT CONVEYOR	1
15	0970645030	A	LINER RH	LIFT CONVEYOR	1
16	07445025		PLOW BOLT	1/2"NC X 1-1/2"	74
17	4589010228	B	LOCKNUT	1/2"NC	74

Return to Table of Contents Page

TEREX
CEDARAPIDS

Lift Conveyor Frame Assembly

Part No. 0970645163

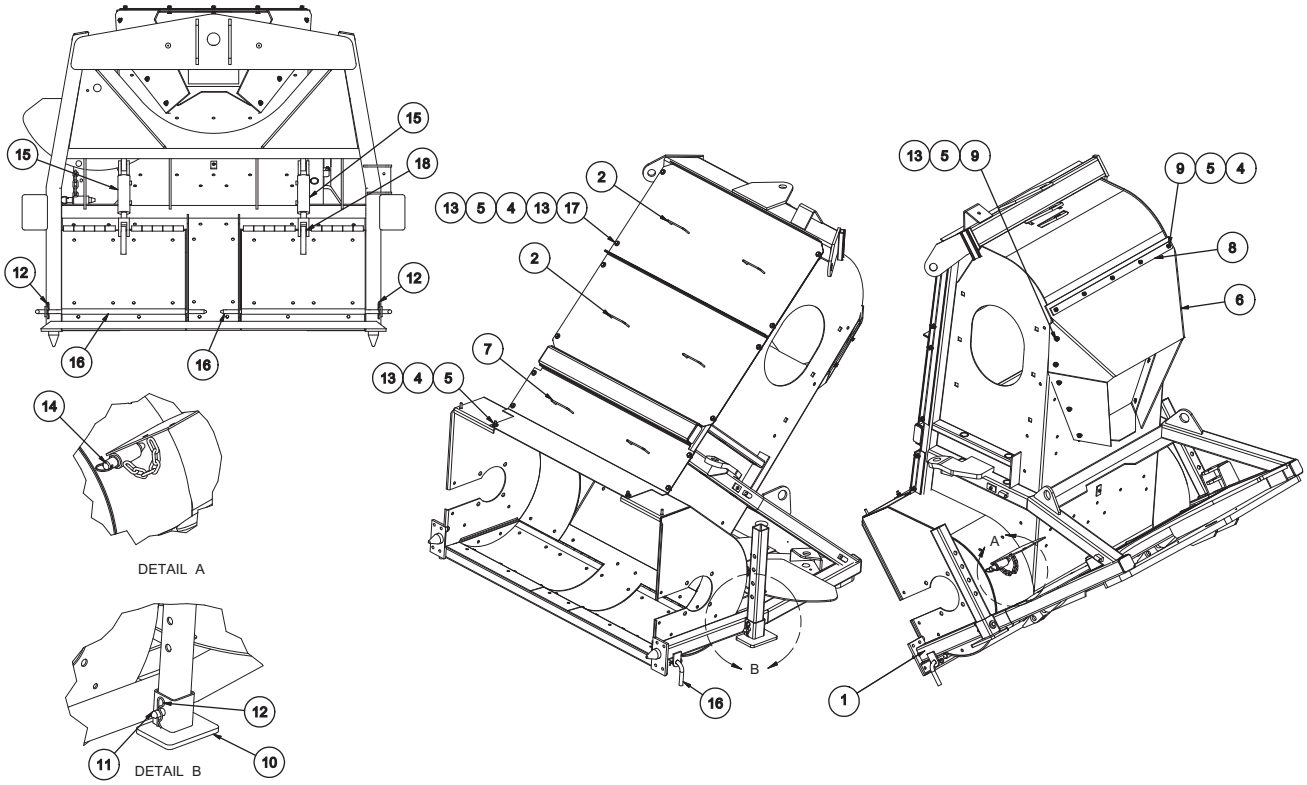

Ref #	Part Number	REV	Part Name	Description	Qty
1	0970645162	J	ASSEMBLY	LIFT CONVEYOR FRAME	1
2	0970645088	-	COVER	LIFT-CONVEYOR	2
4	07014003		WASHER	3/8" LOCK	19
5	07012025		HEX NUT	3/8" NC	29
6	0970645150		RUBBER	LIFT CONVEYOR	1
7	0970645089	B	COVER	FUME EXTRACTION	1
8	0970645091	-	PLATE	CLAMPING	1
9	07383039		CAPSCREW	3/8"NC X 1-1/4	15
10	0970645153	A	LEG	LIFT CONVEYOR	2
11	0970645113	A	PIN		2
12	0970630025	-	HAIRPIN	COTTER PIN	4
13	07014018		WASHER	3/8"	36
14	4507000107		PIN	1" DIA X 3" QUICK REL	1
15	4508001051	A	CYLINDER	2"BORE X2"STROKE	2
16	0970645178	A	PIN	CLEAN OUT DOOR	2
17	07383038		CAPSCREW	3/8" NC X 1"	12
18	07011043		COTTER PIN	3/16" X 1-1/2"	4

Return to Table of Contents Page

TEREX
CEDARAPIDS

Loadout Conveyor Covers Assembly

Part No. 0970645161

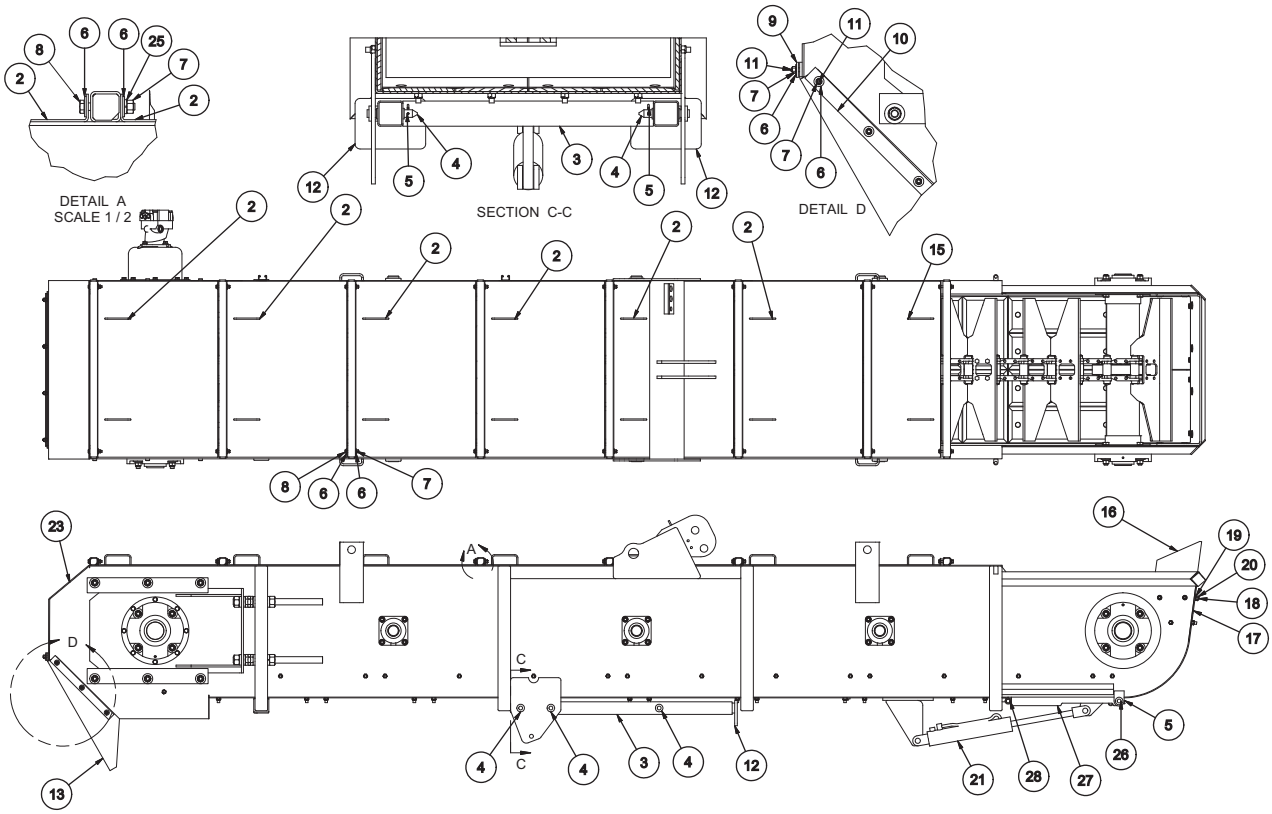

Ref #	Part Number	REV	Part Name	Description	Qty
2	0970645094	A	COVER	FUME EXTRACTION	6
3	0970645112	B	WELDMENT	CONVEYOR PROP	1
4	0970645113	A	PIN		6
5	0970630025	-	HAIRPIN	COTTER PIN	8
6	07014018		WASHER	3/8"	42
7	07012025		HEX NUT	3/8" NC	26
8	07383044		CAPSCREW	3/8"NC 2-1/2"	16
9	0970645092	A	PLATE	CLAMPING	1
10	0970645093	-	PLATE	CLAMPING	2
11	07383039		CAPSCREW	3/8"NC X 1-1/4	10
12	0970645148	A	WELDMENT	PROP-INNER	2
13	0970645149	B	RUBBER	MAIN CONVEYOR	1
15	0970645103	B	COVER	FUME EXTRACTION	1
16	0970645151		RUBBER	MAIN CONV INLET	1
17	07014020		WASHER	1/2"	8
18	07389046		CAPSCREW	SCH1/2NCX1-1/2	8
19	07014005		WASHER	1/2" LOCK	8
20	07012027		HEX NUT	1/2" NC	8
21	4509000785	-	HYDRAULIC CYLINDER	2.5"BORE X 12"	1
23	0970645160	C	ASSEMBLY	MAIN CONV LOWER *(See Form 24790-24791)*	1
25	07014003		WASHER	3/8" LOCK	16
26	0970645193		PIN	LOADOUT CLEAN OUT DOOR	2
27	0970645187		DOOR	LOADOUT CONVEYOR CLEAN OUT	1
28	NPN		ROD	3/4" x 30 - 1/4"	1

Return to Table of Contents Page

TEREX
CEDARAPIDS

Loadout Conveyor Lower Shaft Assembly

Part No. 0970645160

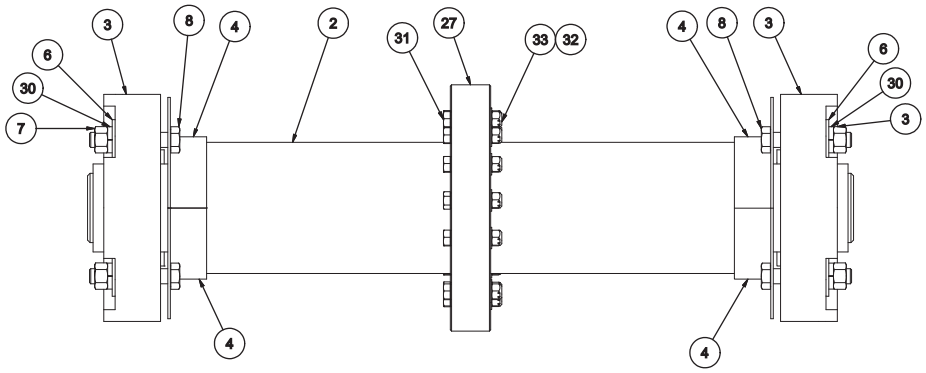

LOWER SHAFT ASSEMBLY

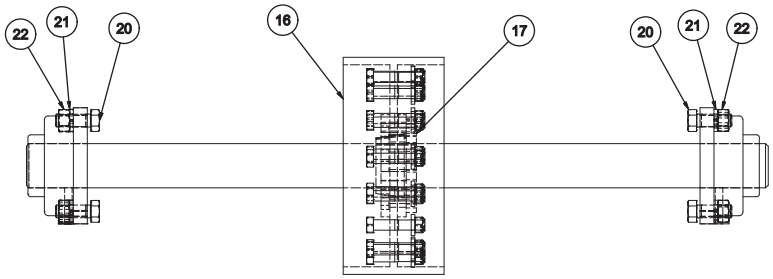

IDLER SHAFT ASSEMBLY

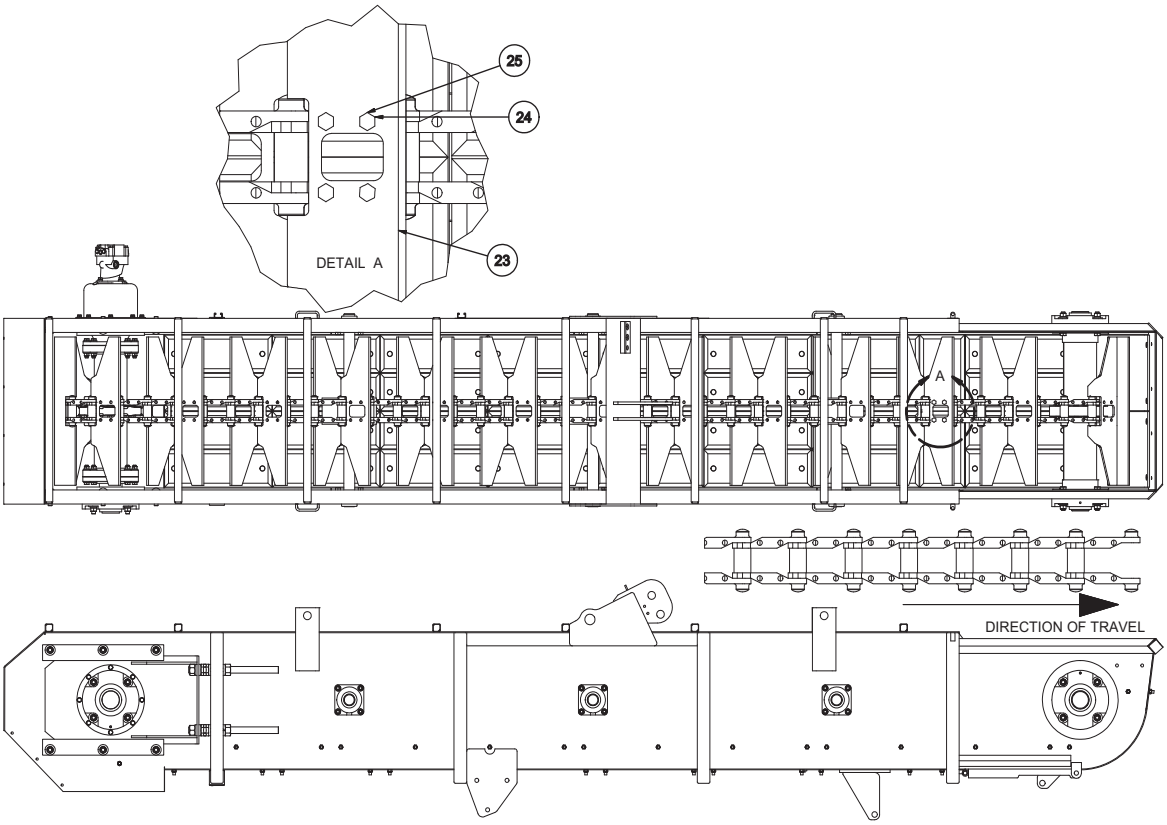

Return to Table of Contents Page

TEREX
CEDARAPIDS

Loadout Conveyor Lower Shaft Assembly

Part No. 0970645160

Ref #	Part Number	REV	Part Name	Description	Qty
1	0970645159	D	ASSEMBLY	UPPER CONV SHAFT *(See Form 24792-24793)*	1
2	0970645123	B	SHAFT	MOTOR MAIN CONVEYOR	1
3	0970645024	A	BEARING		2
4	0970645011	-	GUARD	AUGER-SHAFT UPPER	4
5	0970645049	B	CHAIN	78 PITCHES SIZE B1	1
6	07014023		WASHER	3/4"	8
7	07012030		HEX NUT	3/4" NC	8
8	07383126		CAPSCREW	3/4" NC X 4"	8
15	0970645182		SHAFT	CONV IDLER	3
16	0970645054	-	WHEEL	IDLER	3
17	07371020		BUSHING	SF 2-3/16" BORE	3
20	07383101		CAPSCREW	5/8"NC X 1-3/4	24
21	07014007		WASHER	5/8" LOCK	24
22	07012029		HEX NUT	5/8" NC	24
23	0970645145	-	FLIGHT	DELIVERY CONVEYOR	26
24	4589030351	-	BOLT	12MM 1MM X 45MM	104
25	4589030216	-	SQUARE NUT		104
27	0970645155	A	IDLER	LOWER SHAFT	1
28	F0203FGA	B	FL BEARING	2-3/16"	6
30	07014009		WASHER	3/4" LOCK	8
31	07399042		CAPSCREW	2-1/2" NC GR 8	14
32	07465001		WASHER	1/2" HRD FLT	14
33	4589010228	B	LOCKNUT	1/2"NC	14

Return to Table of Contents Page

TEREX
CEDARAPIDS

Loadout Conveyor Upper Shaft Assembly

Part No. 0970645159

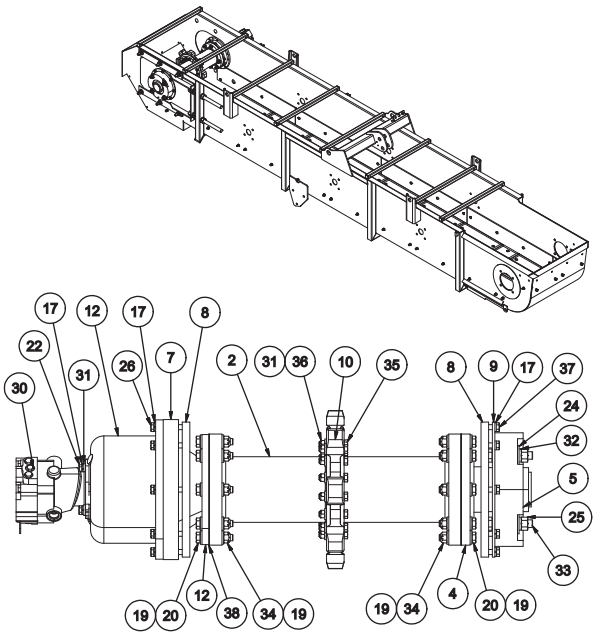

SHAFT SHOWN FOR CLARITY

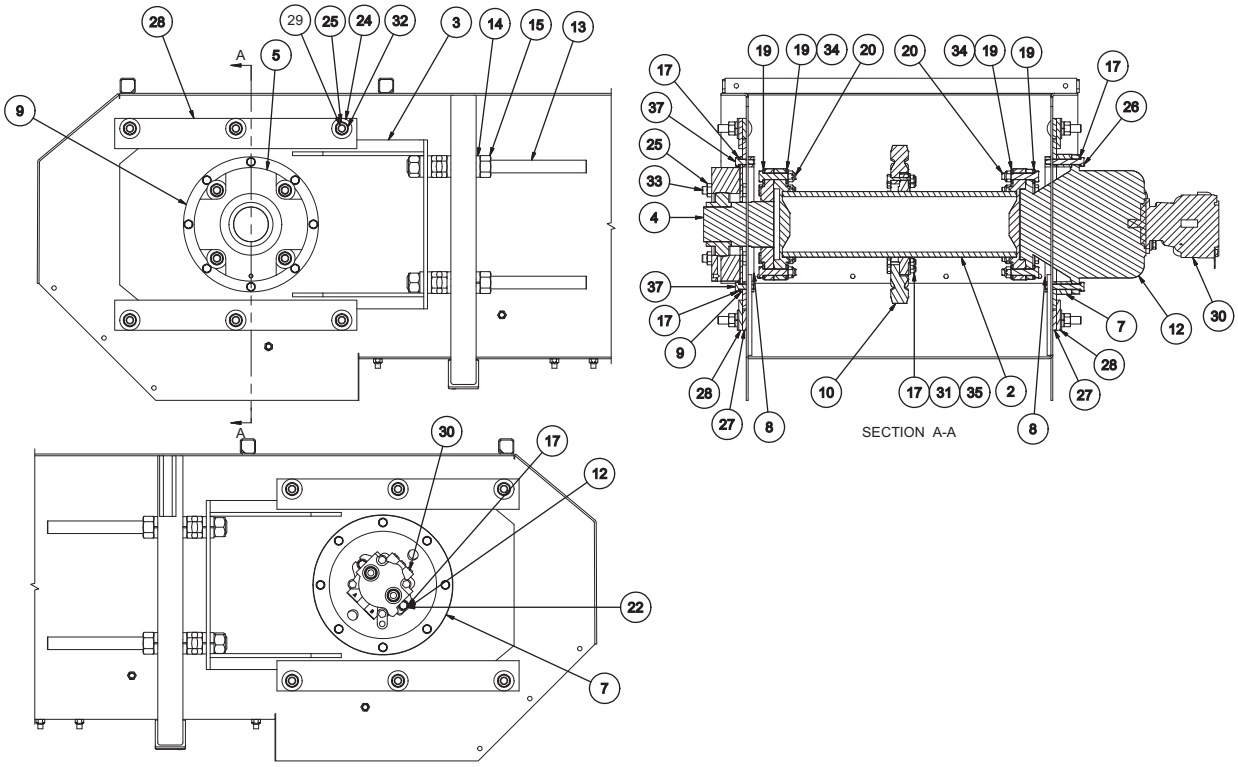

Return to Table of Contents Page

TEREX
CEDARAPIDS

Loadout Conveyor Upper Shaft Assembly

Part No. 0970645159

Ref #	Part Number	REV	Part Name	Description	Qty
1	0970645158	A	ASSEMBLY	LOADOUT CONVEYOR LINERS *(See Form 24794)*	1
2	0970645122	B	SHAFT	MOTOR MAIN CONVEYOR	1
3	0970645015	A	SLIDE WELD	GEARBOX CONVEYOR	2
4	0970645018	-	ADAPTER	MOTOR SHAFT	1
5	0970645024	A	BEARING		1
6	0970645020	-	SPACER	RING	1
8	0970645021	A	RING	BOLTING	2
9	0970645023	-	PLATE	BEARING ADAPTER	1
10	0970645010	B	SPROCKET	8T	1
12	4563550023	-	GEARBOX	AUBURN MODEL 8	1
13	07155059		ADJ BOLT	1-1/4"NC X16-1/2	4
14	07014013		WASHER	1-1/4" LOCK	16
15	07012034		HEX NUT	1-1/4" NC	12
17	07014005		WASHER	1/2" LOCK	18
19	07465002		WASHER	5/8" HARDENED FLAT	32
20	07399005		CAPSCREW	5/8"NCX3-1/4"GR8	16
22	07383071		CAPSCREW	1/2"NC X 1-3/4"	2
24	07014023		WASHER	3/4"	16
25	07012030		HEX NUT	3/4" NC	16
26	07383078		CAPSCREW	1/2"NC X 3-1/2"	8
27	0970645110	A	BAR	SPACER	4
28	0970645109	-	BAR	MOTOR GUIDE	4
29	07072174		CARR BOLT	3/4"NC	12
30	4508000647	A	MOTOR		1
31	07465001		WASHER	1/2" HRD FLT	16
32	07014009		WASHER	3/4" LOCK	16
33	07383126		CAPSCREW	3/4" NC X 4"	4
34	4589010229	B	LOCKNUT	5/8" NC	16
35	07399042		CAPSCREW	2-1/2" NC GR 8	14
36	4589010228	B	LOCKNUT	1/2"NC	14
37	07383070		CAPSCREW	1/2"NC X 1-1/2	8
38	0970645189		SHIM	LOADOUT CONVEYOR TAILSHAFT	2

Return to Table of Contents Page

TEREX
CEDARAPIDS

Loadout Conveyor Liners Assembly

Part No. 0970645158

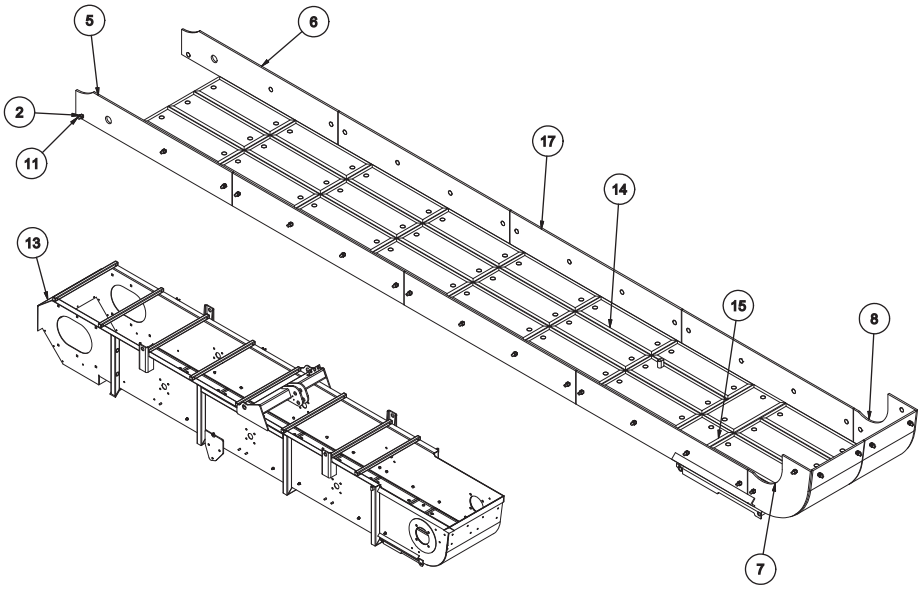

Ref #	Part Number	REV	Part Name	Description	Qty
2	4589010228	B	LOCKNUT	1/2"NC	110
5	0970645043	-	LINER	LH-SIDE	1
6	0970645044	-	LINER	RH-SIDE	1
7	0970645054	-	WHEEL	IDLER	1
8	0970645046	-	LINER SIDE	RH-LOWER	1
11	07445025		PLOW BOLT	1/2"NC X 1-1/2"	110
13	0970645157	G	MAIN FRAME	CONVEYOR	1
14	0970210013	A	LINER	HIGH ALLOY	32
15	0970645179	C	LINER	CONVEYOR LINER	2
16	0970645176		LINER	LOWER	2
17	0970645177		LINER	SIDE	6

TEREX
CEDARAPIDS

RoadMix Conveyor Emblems

Parts List No. 05231KAB

Ref #	Part Number	REV	Part Name	Description	Qty
-	0970645156	C	ASSEMBLY DRAWING	ROADMIX DECALS	REF
103	0449410482	-	EMBLEM	ROADMIX	2
104	0449410489	-	EMBLEM	TEREX CROWN	2
105	0449150003		DECAL	WARNING ASPHALT BURN	2
106	0449150009		DECAL	WARNING HOT SURFACE	2
107	0449150010		DECAL	WARNING FLUID INJECTION	2
108	0449150002		DECAL	WARNING FALLING MATERIAL	2
109	0449350001	A	DECAL	LIFT POINT ISO	8
110	4601060008	-	REFLECTOR	AMBER	4
111	0449350002		DECAL	SHAFT END	4
112	4601060006	B	TAPE	1" WHITE	64'
113	0449150008		DECAL	WARNING MOVING CONVEYOR	2
114	0449150001		DECAL	WARNING SWING LOCK	1
115	0449040002		DECAL	DANGER ELECT HAZARD	2
116	4601060007	A	REFLECTOR	RED	2
117	04418197	A	EMBLEM	SMV	1
118	07435135		MACH SCREW	1/4"NC X 3/4"	2
119	07014001		WASHER	1/4" LOCK	2
120	07012023		HEX NUT	1/4" NC	2
121	0449150015		DECAL	WARNING ENTANGLEMENT HAZARD	2
122	0449350003		DECAL	TIE DOWN POINT-ISO	4

NOTE: NO ILLUSTRATION AVAILABLE

Return to Table of Contents Page

TEREX CEDARAPIDS

Table of Contents

Tractor Electrical Components - 05231JAE

Ref No.	Description	Page No.
1	Tractor Electrical Components - Parts Listing	2
2	Control Console - Illustration	3
3	Control Console - Parts Listing	4-5
4	Main Junction Box - Illustration	6
5	Main Junction Box - Parts Listing	7
6	Remote Control Box	8

Return to Table of Contents Page

TEREX
CEDARAPIDS

Tractor Electrical Components

Parts List No. 05231JAE

Ref #	Part Number	REV	Part Name	Description	Qty
1	0970940026		KIT	TRACTOR ELECTRICAL	1
2	0970640017	A	MAIN BOX	*(See Form 24604-24605)*	1
3	0970640019	A	CONSOLE	*(See Form 24602-24603)*	1
4	0970437658	B	HARNESS	FRONT	1
5	0970641002	B	HARNESS	REAR	1
6	0970441133	A	CABLE	MAIN BOX TO SCREED	1
7	0970640011	C	CONTROL	REMOTE *(See Form 24606)*	1
8	04495032	A	DIAGRAM	LAMINATED	1
9	4619500102	A	LOCKNUT	3/4"	2
10	0970940012	-	KIT	ELECTRICAL RECEPTACLE PLATE	1
11	0970441622	-	PLATE	RH	1
12	0970441623	-	PLATE	LH	1
13	4631300227	-	COVER	CAP & CHAIN	2
14	4631300250	-	COVER	#14 CAP & CHAIN	1
15	07383023		CAPSCREW	5/16"NC X 1-1/4	8
16	07014002		WASHER	5/16" LOCK	12
17	07012024		HEX NUT	5/16" NC	8
18	07504052		MACH SCREW	#8-32 X 1/2" U	4
19	07438022		WASHER	#8 SHKP LK SINT	4
20	07440008		HEX NUT	#8 NC	4
21	07504007		MACH SCREW	#4-40 1/2" UND	16
22	07438019		WASHER	#4 SHKP LK	16
23	07440005		HEX NUT	#4 NC	16
24	4508052935	-	CLAMP HALF	1"	12
25	4508052927	-	PLATE	COVER FOR CLAMP	6
26	07014002		WASHER	5/16" LOCK	6
27	07383025		CAPSCREW	5/16"NC X 1-3/4	6
28	07509006		CLAMP	3/4"	8
29	07509008		HOSE CLAMP	15/16"	3
30	07383039		CAPSCREW	3/8"NC X 1-1/4	11
31	07014003		WASHER	3/8" LOCK	11
32	07012025		HEX NUT	3/8" NC	11
33	4508052929	A	CLAMP	1-1/4" HALF	2
34	4508052930	-	COVER	1-1/4" CLAMP	1
35	07014002		WASHER	5/16" LOCK	1
36	07383028		CAPSCREW	5/16"NC X 2-1/2	1
37	4606110215	A	TRANSDUCER	HYDRAULIC PRESSURE	2
38	4508052705	-	ADAPTER	GAUGE	2
39	4508052707	-	TEST HOSE	36"	2
40	4508052718	-	FITTING	TEST 3/8"MALE JIC	2
41	07430252		CONNECTOR	#6SAEM X #6JICM	2
42	07430383		ELBOW	3/8" SWIVEL NUT	2
43	07509007		CLAMP	13/16"	2
44	4601000128	A	ALARM	BACK UP	1
45	07383004		CAPSCREW	1/4"NC X 3/4"	4
46	07014001		WASHER	1/4" LOCK	4
47	07014016		WASHER	1/4"	4
48	07012023		HEX NUT	1/4" NC	4
49	5601810812	A	WIRE	#14 STRANDED BLUE	1'
50	4627500102	A	WIRE LUG	14-16 EYE	2
51	4627500105	-	WIRE LUG	#14-#16	1
52	4627500160	-	LUG	MALE 16/14AWG INSULATED	1

NOTE: No Illustration Available

Return to Table of Contents Page

TEREX
CEDARAPIDS

Control Console

Part No. 0970640019

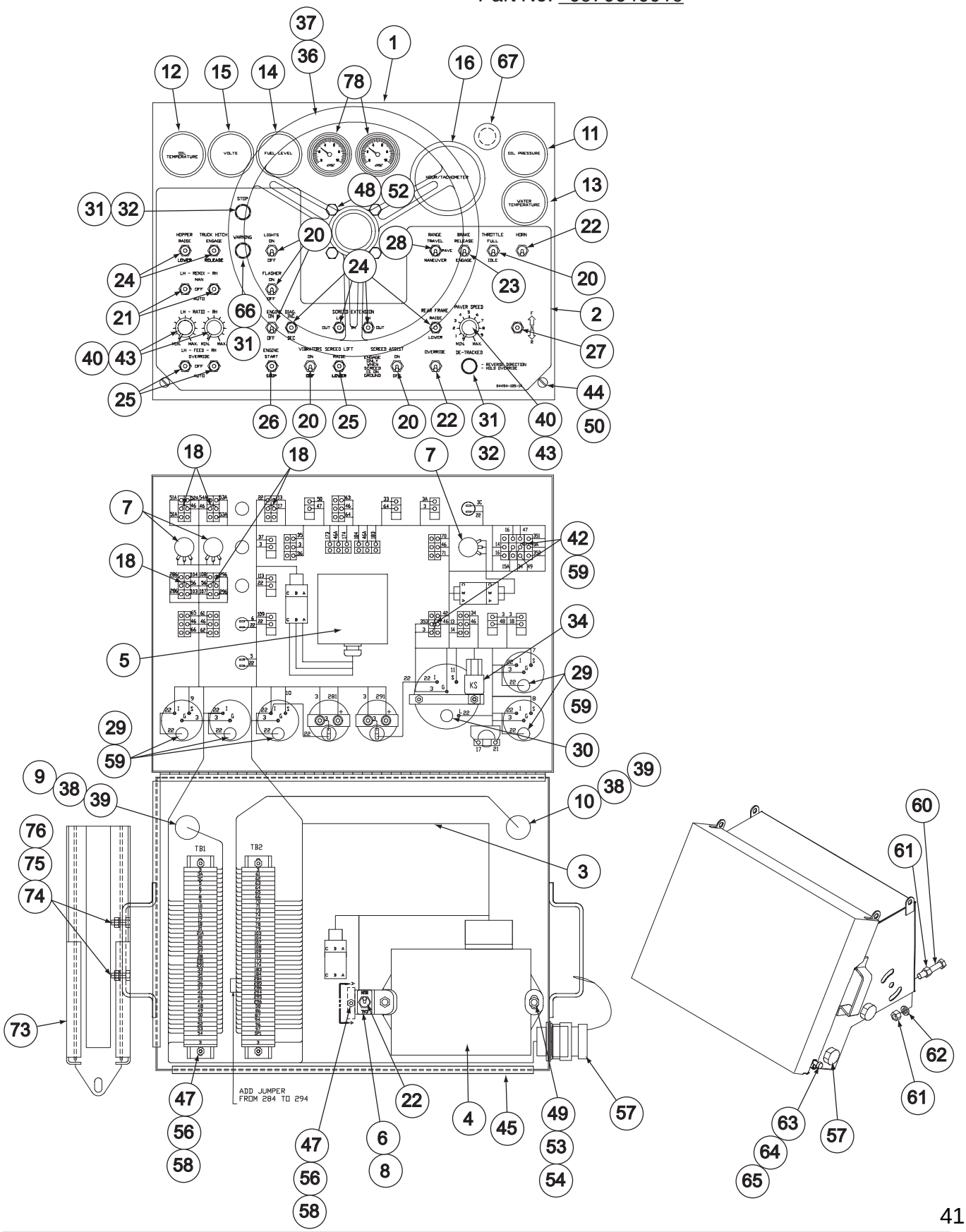

Return to Table of Contents Page

TEREX
CEDARAPIDS

Control Console

Part No. 0970640019

Ref #	Part Number	Description	Qty
1	0970450626	Console	1
2	0449410545	Emblem	1
3	0970437686	Harness, Console	1
4	4606152531	Controller, Track Steering	1
5	4606152521	Sensor, Steer	1
6	04418857	Emblem, CAL/RUN	1
7	0970441650	Potentiometer, Speed	3
8	0970441648	Bracket, Switch Mounting	1
9	0970441140	Cable, LH	1
10	0970441139	Cable, RH	1
11	4586500241	Gauge, Oil Pressure	1
12	4586500316	Gauge, Oil Temp.	1
13	4586500317	Gauge, Water Temp.	1
14	4591501208	Gauge, Fuel Level	1
15	4622500124	Meter, Voltmeter - 12VDC	1
16	4622501017	Meter, Tach/Hour	1
18	4626050103	Jumper, Switch Block	5
20	4620000906	Switch, Toggle	6
21	4620000908	Switch, Toggle	2
22	4620000911	Switch, Toggle	2
23	4620000918	Switch, Toggle	1
24	4620000921	Switch, Toggle	6
25	4620000940	Switch, Toggle	3
26	4620000941	Switch, Toggle	1
27	4620000962	Switch, Toggle	1
28	4620000963	Switch, Toggle	1
29	4627000509	Light Kit, Meter	5
30	4627000510	Light Kit, 12VDC	1
31	4627000244	Lamp, 14VDC	3
32	4627050036	Lens, Red	2
33	4606150062	Socket	3
34	4632500243	Relay, Power	1
35	4601060009	Emblem, Steering Wheel	1
36	0970450298	Steering Wheel	1
37	4525951707	Nut, 7/8"	1
38	4602601514	Connector, 1-1/4" 90 Degree	2
39	4619500104	Locknut	2

Return to Table of Contents Page

TEREX
CEDARAPIDS

Control Console

Part No. 0970640019

Ref #	Part Number	Description	Qty
40	4607550005	Knob, 1" Dia.	3
42	4695500143	Diode, 600V - 6A	2
43	4589010006	Seal Nut	3
44	4589010029	Nut, 1/4" Self Retaining	2
45	4589080031	Edging	4.7'
47	07504052	Machine Screw, #8-32 x 1/2"	5
48	07383034	Capscrew, 3/8" NC x 1/2"	4
49	07383022	Capscrew, 5/16" NC x 1"	2
50	07437135	Machine Screw, 1/4" NC x 3/4"	2
51	07014017	Washer, 5/16"	2
52	07014003	Washer, 3/8" Lock	4
53	07014002	Washer, 5/16" Lock	2
54	07012024	Hex Nut, 5/16" NC	2
55	07438023	Washer, #10 SHKP Lock	4
56	07438022	Washer, #8 SHKP Lock	5
57	0970641009	Plug, Jumper	1
58	07440008	Hex Nut, #8 NC	5
59	4627500102	Wire Lug, 14/16 Eye	13
60	07383075	Capscrew, 1/2" NC x 2-3/4"	2
61	07012027	Hex Nut, 1/2" NC	4
62	07014005	Washer, 1/2" Lock	2
63	07455012	Shoulder Screw, 3/8" x 5/8"	2
64	07012024	Hex Nut, 5/16" NC	2
65	07014002	Washer, 5/16" Lock	2
66	4627050037	Lens, Amber	1
67	4608540146	E-Stop	1
73	0970458665	Holder, Remote Control	1
74	07383004	Capscrew, 1/4" NC x 3/4"	2
75	07014001	Washer, 1/4" Lock	2
76	07012023	Hex Nut, 1/4" NC	2
78	4586500246	Gauge, Pressure	2

Return to Table of Contents Page

TEREX
CEDARAPIDS

Main Junction Box

Part No. 0970640017

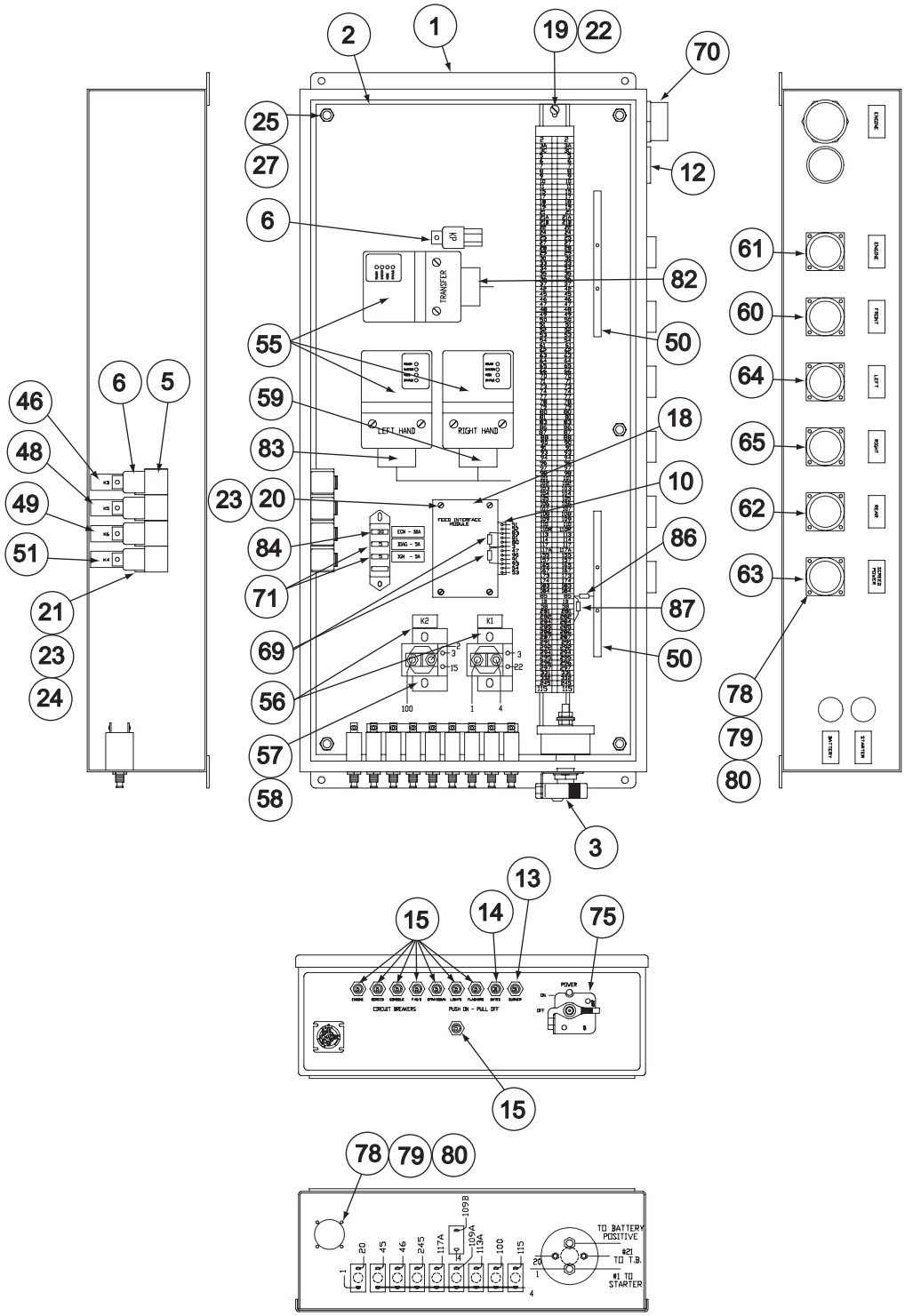

Return to Table of Contents Page

TEREX
CEDARAPIDS

Main Junction Box

Part No. 0970640017

Ref #	Part Number	Description	Qty
1	0970441753	Box, Main	1
2	0970441751	Plate, Mounting	1
3	4620001161	Switch, Key	1
5	4601500149	Socket, Relay	4
6	4632500243	Relay, Power	5
10	4695601302	Plug, 12 Position	1
13	4616500501	Breaker, 50A	1
14	4616500484	Breaker, 30A	1
15	4616500483	Breaker, 15A	8
16	4616550803	Bus Bar	1
17	04418888	Emblem, Main Box	1
18	4606550039	Feed Interface Module	1
19	07504064	Screw, #10-32 x 3/8"	11
20	07504055	Screw, #8-32 x 3/4"	8
21	07504050	Screw, #8-32 x 3/8"	8
22	07438023	Washer, #10 SHKP Lock	7
23	07438022	Washer, #8 SHKP Lock	12
24	07440008	Hex Nut, #8 NC	4
25	07014003	Washer, 3/8" Lock	6
27	07012003	Hex Nut, 3/8" NC	6
50	4626000207	Ground Bar	2
55	4606152525	Controller	3
56	4601500163	Contactor	2
57	07435130	Machine Screw, 1/4" NF x 3/8"	4
58	07435025	Washer	4
59	460615252501	Harness, Control RH	1
60	0970437662	Receptacle, Front Harness	1
61	0970437680	Receptacle, Engine	1
62	0970437677	Receptacle, Rear Harness	1
63	0970437678	Receptacle, Screed	1
64	0970437695	Receptacle, Console 1	1
65	0970437684	Receptacle, Console 2	1
69	4695610625	Resistor, 27 Ohm 2 Watt	2
70	0970437675	Harness, QSB Engine	1
71	4619000763	Fuse, 5 Amp - Littlefuse ATO 005	2
75	4620001162	Switch, Disconnect Lock	1
82	0970437685	Harness, Control Transfer	1
83	460615252502	Harness, Control LH	1
84	4619000762	Fuse, 30 Amp - Littlefuse ATO 030	1
86	4695610244	Resistor, 1K Ohm 1/2 Watt	1
87	4695610232	Resistor, 100 Ohm	1

Return to Table of Contents Page

TEREX
CEDARAPIDS

Remote Control Box

Part No. 0970640011

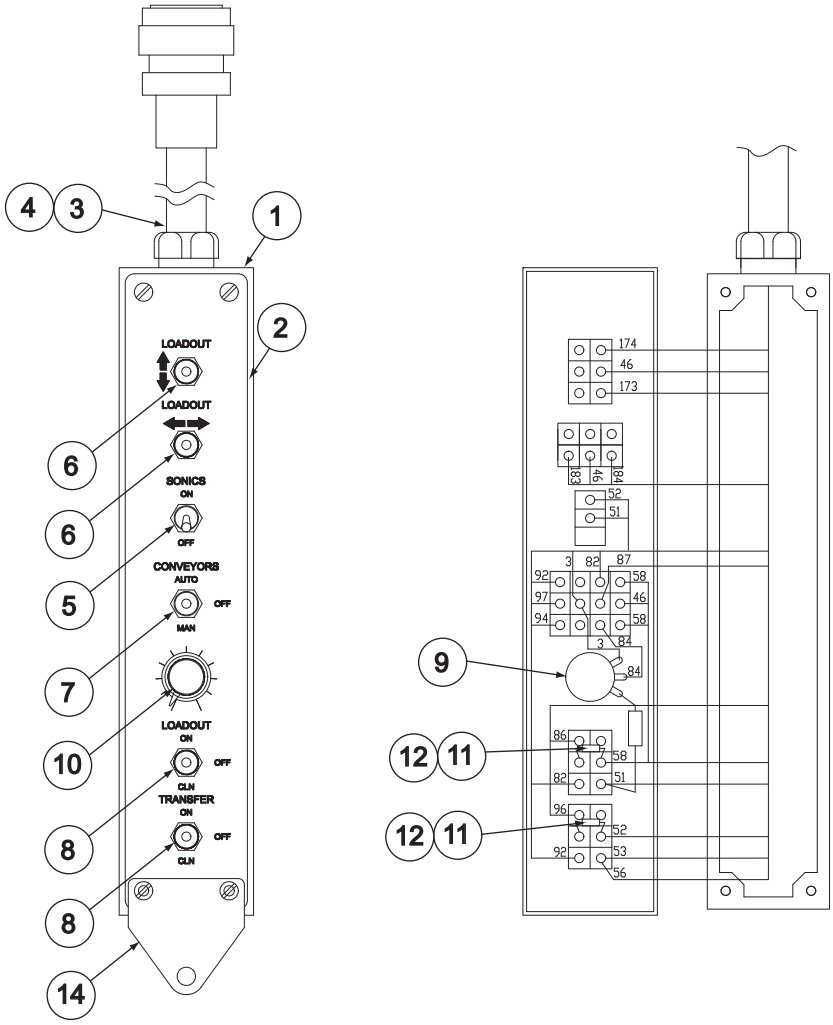

Ref #	Part Number	Description	Qty
1	0970461002	Box, Remote	1
2	0449410541	Emblem	1
3	0970641008	Cable, Loadout Control	1
4	4619500103	Locknut, 1" Truseal	1
5	4620000906	Switch, Toggle	1
6	4620000921	Switch, Toggle	2
7	4620000961	Switch, Toggle	1
8	4620000965	Switch, Toggle	2
9	0970220084	Speed Potentiometer, Conveyor	1
10	4607550005	Knob, 1" Dia.	1
11	NPN	Resistor, 75 Ohm 3 Watt	2
12	4627500102	Wire Lug - 16/14 Eye - #10 Stud	20
14	0970458666	Tab, Padlock	1

Cedarapids
A Terex Company

Air Cleaner Assembly

Parts List No 05032GSK

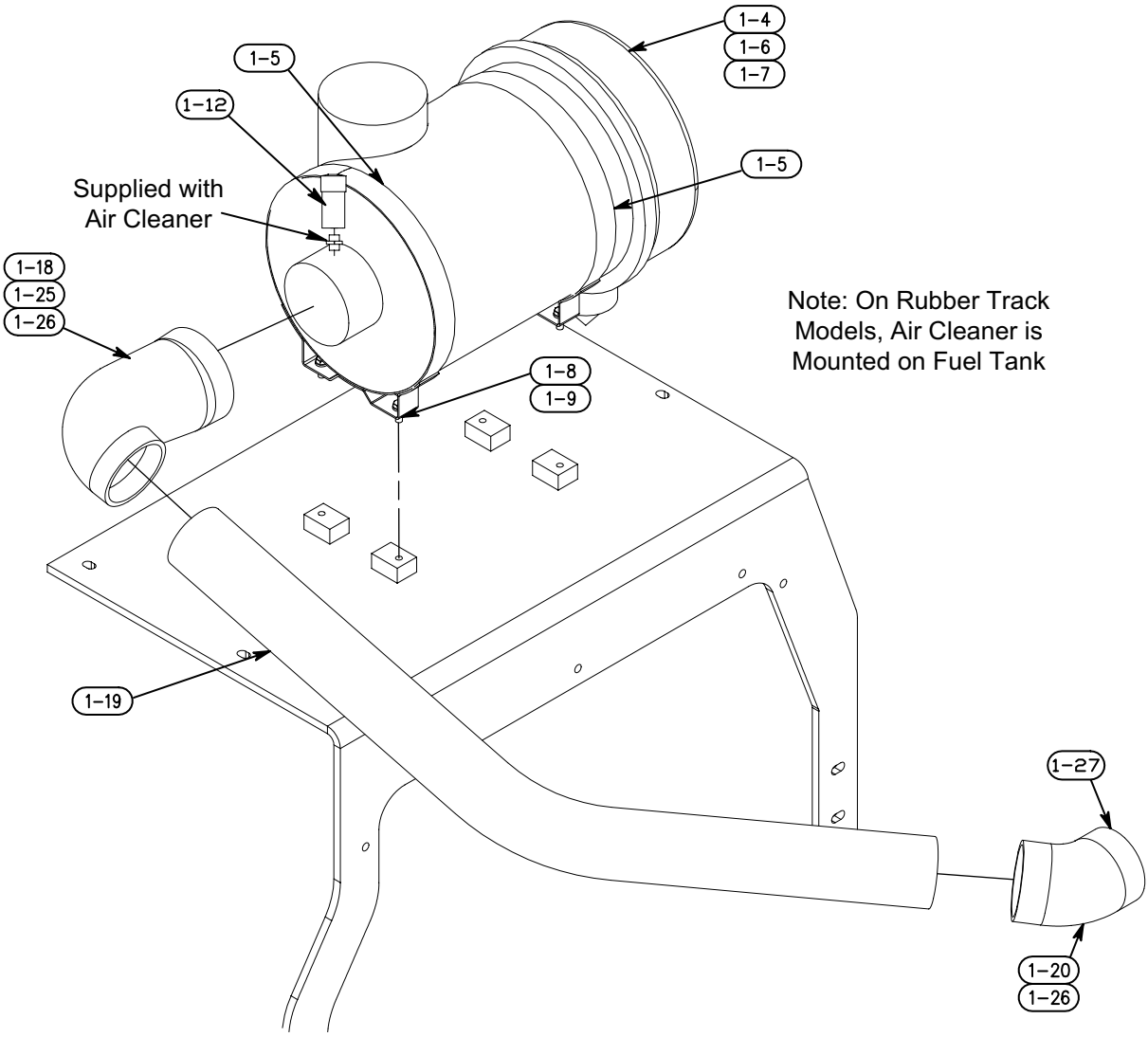

Ref. No.	Part Number	Description	Quantity
1-4	45690-001-33	Cleaner, Air QSB5.9	1
1-5	45690-001-33-03	Mtg. Band, Air Cleaner	2
1-8	07383-038	Capscrew, 3/8" NC x 1"	4
1-9	07014-003	Washer, 3/8" Lock	4
1-12	45690-001-26-03	Indicator, Restriction	1
1-18	45340-001-22	Adapter, 4" x 5" Red. Elbow	1
1-19	09704-323-29	Tube, Air Inlet	1
1-20	45340-001-26	Elbow, 45° x 4" I.D.	1
1-25	45191-007-22	Clamp, 5.625" T-Bolt	1
1-26	45191-007-20	Clamp, 4.5" T-Bolt	2
1-27	45191-007-81	Clamp, T-Bolt	1

TEREX
CEDARAPIDS

Battery Mounting & Cables

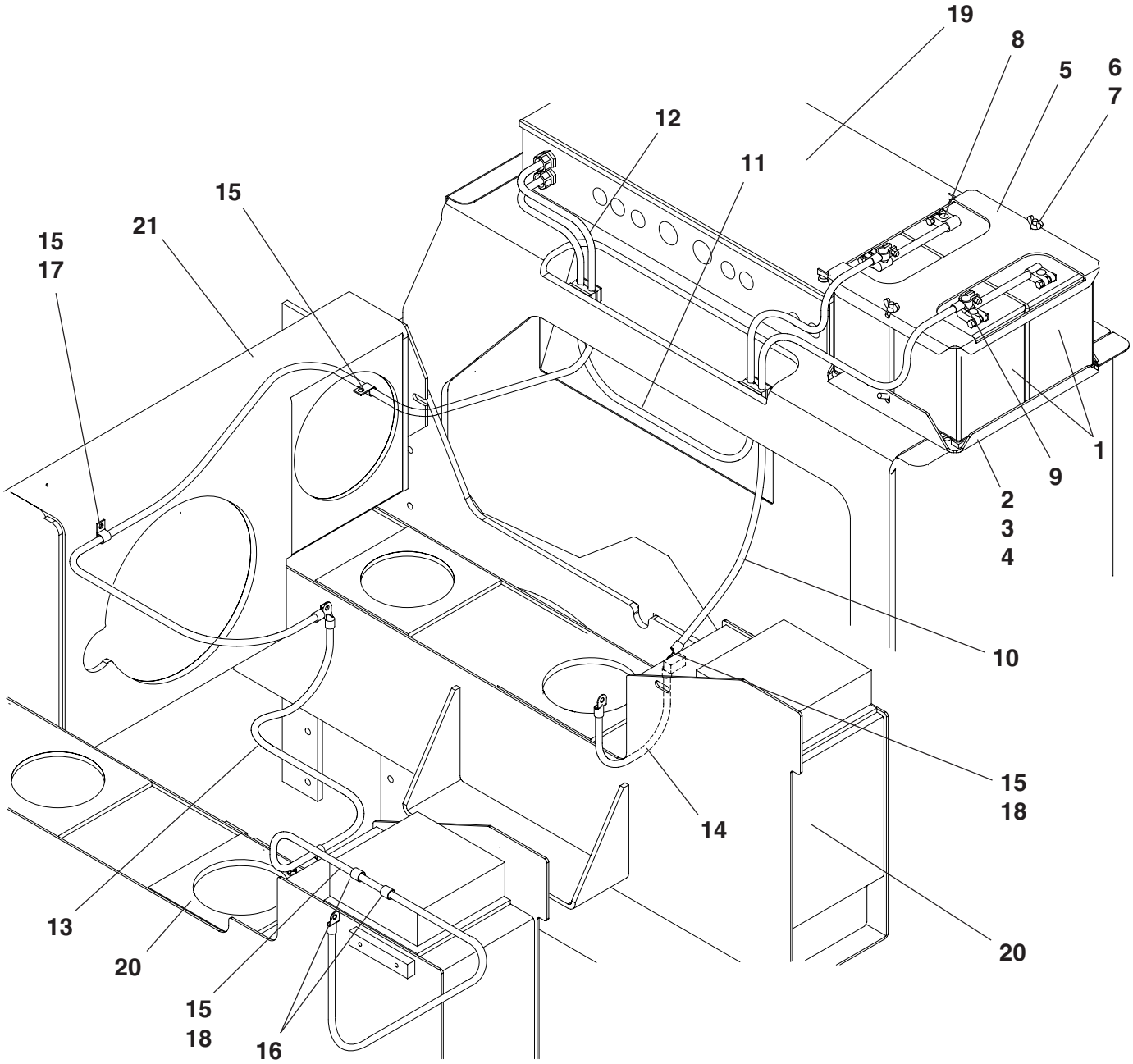

Note: Typical illustration shown. Appearance and quantity of specific components may vary depending on configuration.

TEREX
CEDARAPIDS

Battery Mounting & Cables

Parts List No. 5032GWL

Ref. No.	Part Number	Description	Quantity
1	45040-250-08	Battery, 12V	2
2	9704-318-62	Pad, Battery	1
3	9704-318-60	Mount, Battery Base	1
4	7072-194	Carriage Bolt, 1/2" NC x 1-3/4"	2
	7072-101	Carriage Bolt, 1/2" NC x 1-1/4"	2
	7014-020	Washer, 1/2"	4
	7014-005	Lockwasher, 1/2"	4
	7012-027	Hex Nut, 1/2" NC	4
5	9704-318-61	Clamp, Battery Hold Down	1
6	4445-406-08-02	Bolt, Hook	2
7	7056-011	Wing Nut, 3/8" NC	2
8	Not Required	Jumper, Battery Negative	1
9	Not Required	Jumper, Battery Positive	1
10	9704-411-23	Cable, Negative to Engine - With Battery Jumper	1
11	9704-411-24	Cable, Positive to Junction Box - With Battery Jumper	1
12	9704-411-25	Cable, Starter	1
13	9704-411-26	Cable, Starter to Hood Raise	1
14	9704-411-22	Cable, Jumper	1
15	7509-004	Hose Clamp, 3/8"	3
16	Consult Factory	Miscellaneous Clamp Hardware	-
17	Consult Factory	Miscellaneous Clamp Hardware	-
18	7383-038	Capscrew, 3/8" NC x 1"	2
	7014-003	Lockwasher, 3/8"	2
19	Reference Only	See Main Junction Box & Cables - Elsewhere in this manual	-
20	Reference Only	See Hydraulic Reservoir - Elsewhere in this manual	-
21	Reference Only	See Pump Drives - Elsewhere in this manual	-

TEREX
CEDARAPIDS

Fuel System

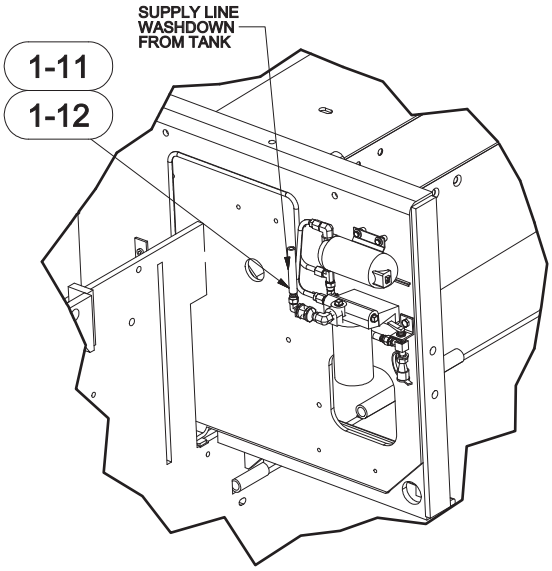

DETAIL A

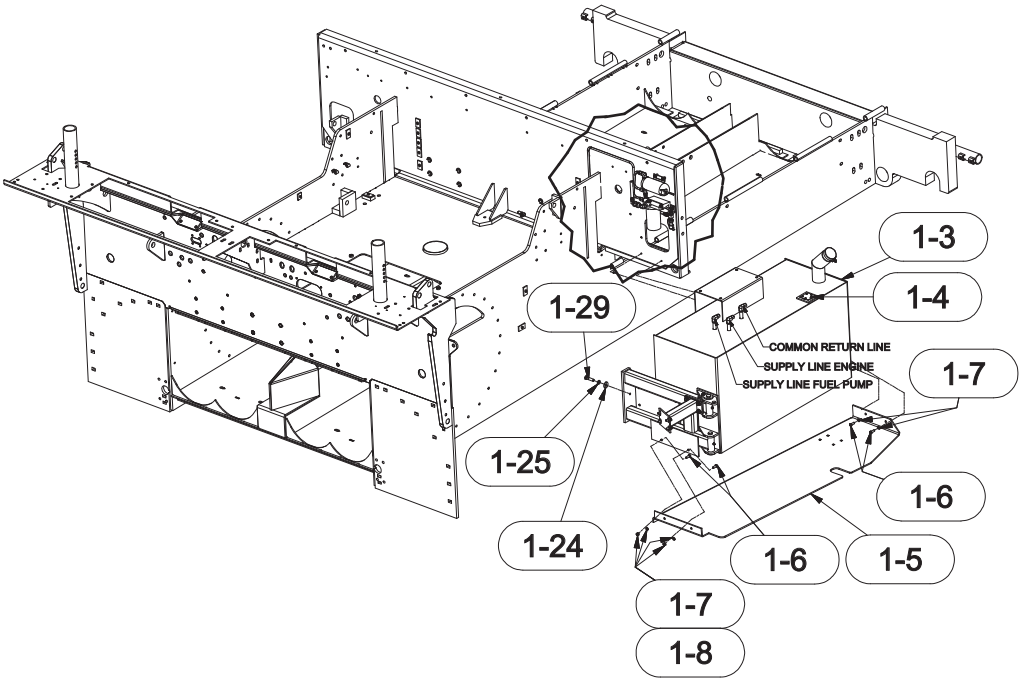

TEREX
CEDARAPIDS

Fuel System

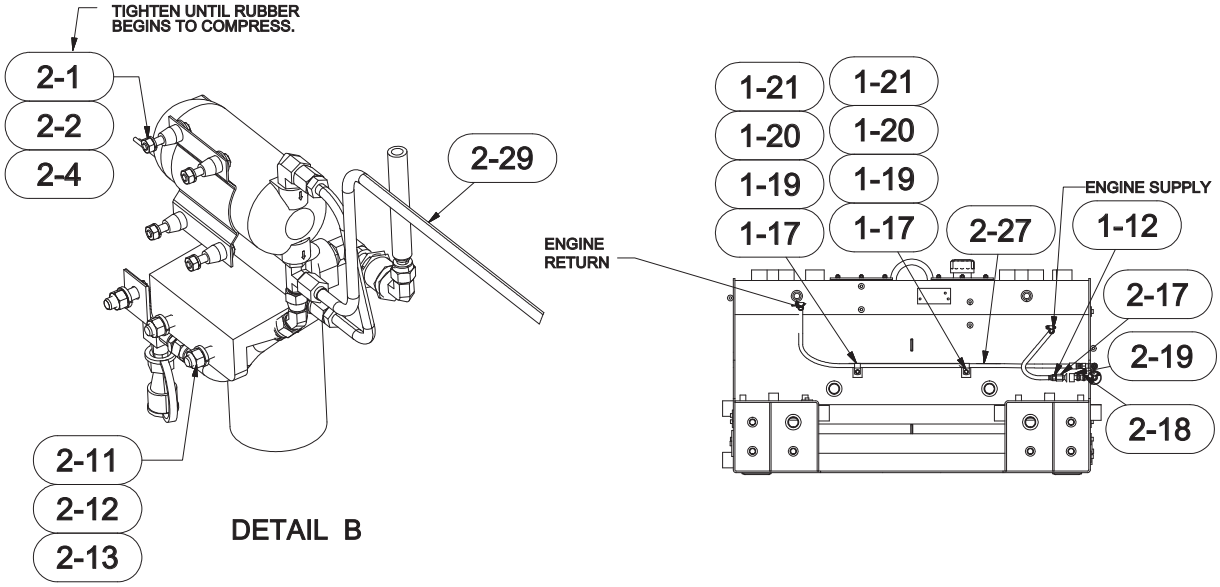

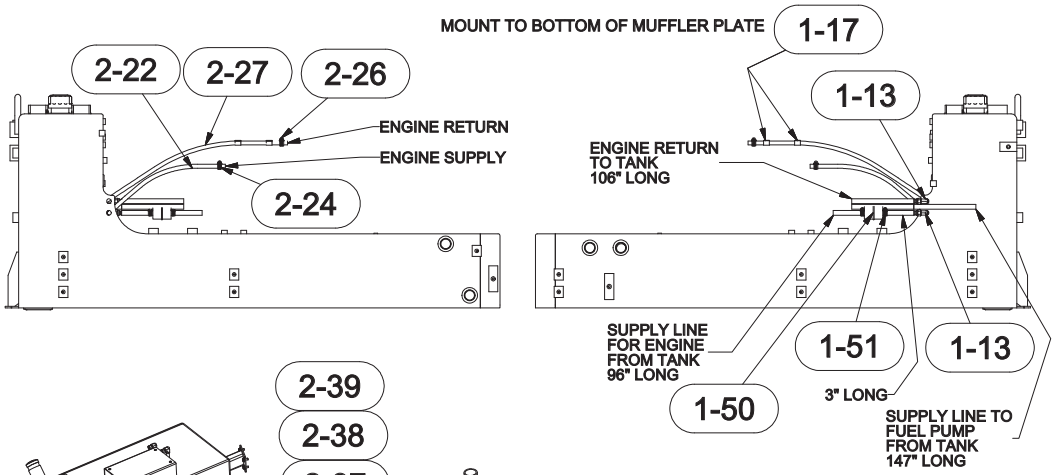

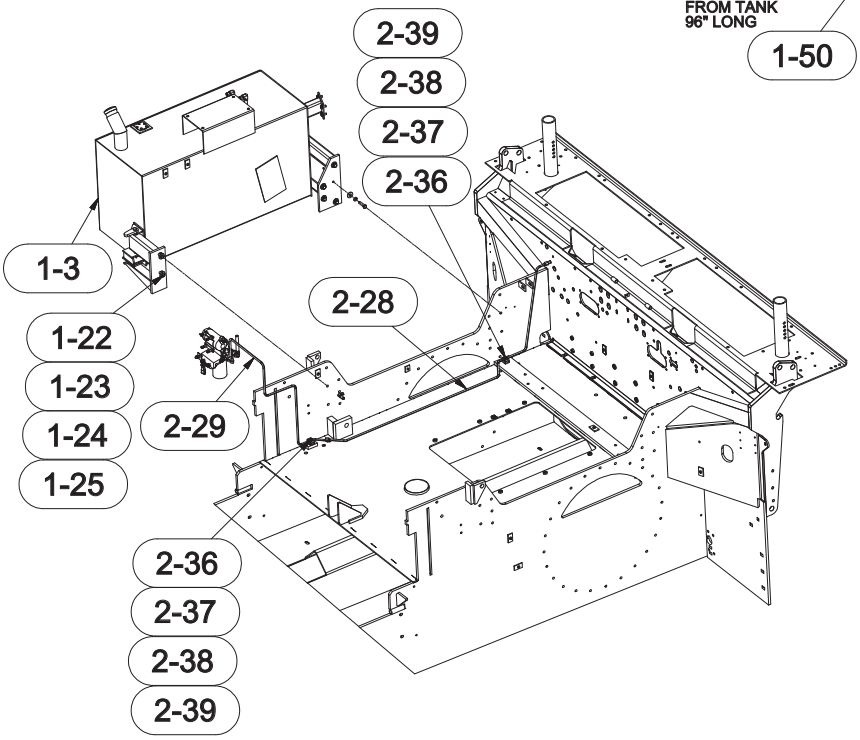

TEREX
CEDARAPIDS

Fuel System

Parts List No. 05231NAE

Ref #	Part Number	REV	Part Name	Description	Qty
-	0970630124	A	ASSEMBLY DRAWING	FUEL SYSTEM 662	REF
103	0970630120		ASSEMBLY	662 FUEL TANK *(See Form 24768)*	1
104	4521551201	M	SENDER	FUEL	1
105	0970630115		PLATFORM	FUEL TANK	1
106	07383038		CAPSCREW	3/8" NC X 1"	4
107	07014003		WASHER	3/8" LOCK	4
108	07012025		HEX NUT	3/8" NC	2
111	5003000202	D	HOSE	3/8" ID	18'
112	07430008		CONNECTOR	1/8"NPT-1/4"JIC	7
113	07430379		ELBOW	3/8" UNION	2
117	07509003		CLAMP	1/2"	4
119	07383002		CAPSCREW	1/4"NC X 1/2"	2
120	07014016		WASHER	1/4"	2
121	07014001		WASHER	1/4" LOCK	2
122	07012027		HEX NUT	1/2" NC	2
123	07383074		CAPSCREW	1/2" NC X 2-1/2"	2
124	07014020		WASHER	1/2"	9
125	07014005		WASHER	1/2" LOCK	7
127	07014003		WASHER	3/8" LOCK	1
128	07383036		CAPSCREW	3/8" NC X 3/4"	1
129	07383072		CAPSCREW	1/2"NC X 2"	5
140	0970830048	A	SUB-ASSEMBLY	FUEL PUMP *(See Form 24810)*	1
150	459300011802	-	STRAINER	FUEL	1
151	4519100428	-	CLAMP	25/32"HOSE	2
201	07383008		CAPSCREW	1/4"NC X 1-1/2"	4
202	07014016		WASHER	1/4"	4
204	07386001		HEX NUT	1/4"NC	4
211	07383040		CAPSCREW	3/8"NC X 1-1/2"	2
212	07014003		WASHER	3/8" LOCK	2
213	07012025		HEX NUT	3/8" NC	2
215	07430379		ELBOW	3/8" UNION	2
216	07014019		WASHER	7/16"	2
217	07430011		CONNECTOR	1/4"NPT-3/8"JIC	1
218	07430423		CONNECTOR	1/4"NPT X 3/8"J	1
219	4525900691	-	VALVE	1/4" FUEL LINE CHECK	1
222	5003000202	D	HOSE	3/8" ID	4.5'
224	4519100428	-	CLAMP	25/32"HOSE	1
226	4519100475	A	CLAMP	5/8" MAX HOSE	1
227	0970432388	-	HOSE ASSY	5/16" ID X 90"	1
228	0970466002	A	TUBE ASSY	SCRED FUEL REAR	1
229	0970466403		TUBE ASSY	FRONT SCREED FU	1
230	451915041401	A	COUPLER	1/4"QD	1
232	07430335		CONNECTOR	UNION	1
234	4572077021	-	NIPPLE	1/4" X 1/4"	1
236	4508052922	-	CLAMP HALF	FOR 3/8" TUBE	4
237	07383006		CAPSCREW	1/4"NC X 1"	2
238	07014016		WASHER	1/4"	2
239	07014001		WASHER	1/4" LOCK	2

TEREX
CEDARAPIDS

Fuel Tank

Part No. 0970630120

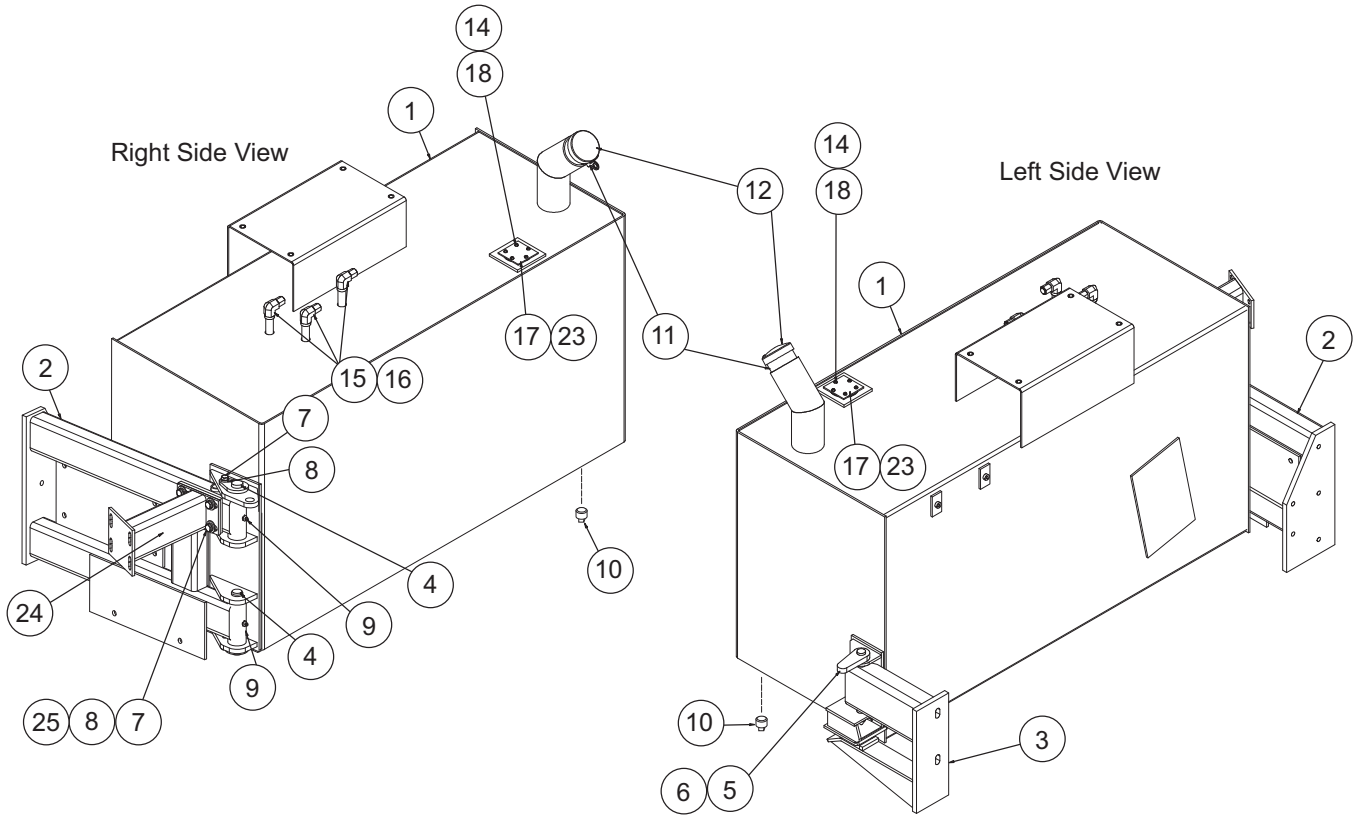

Ref #	Part Number	REV	Part Name	Description	Qty
1	0970630111		TANK	FUEL	1
2	0970630119		SUPPORT	FUEL TANK	1
3	0970630012		WELDMENT	RAMP	1
4	0970630013		PIN	PIVOT	2
5	0970630014		PIN	LOCKING	1
6	0970630025		HAIRPIN	COTTER PIN	1
7	07383038		CAPSCREW	3/8"NC X 3/4"	6
8	07014003		WASHER	3/8" LOCK	6
9	07051001		FITTING	GREASE 1/8" STRAIGHT	2
10	07027003		PLUG	DRAIN 3/4"	1
11	4521550402		FLANGE	FILLER	1
12	4521550105		CAP	FILLER	1
14	07435073		MACHINE SCREW	#8 - 32 X 3/8"	5
15	07430090		ELBOW	3/8" FPT X 3/8" JIC	3
16	07430228		CAP	3/8" (For Shipping Only)	3
17	0520480023		COVER	(For Shipping Only)	1
18	07439002		WASHER	#8 LOCK	5
23	4591500902	-	GASKET		1
24	0970630117	-	WELDMENT	TOOL BOX/FUEL TANK GUSSET	1
25	07014003	-	WASHER	3/8"	4

TEREX
CEDARAPIDS

Fuel Pump Sub-Assembly

Parts List No. 0970830048

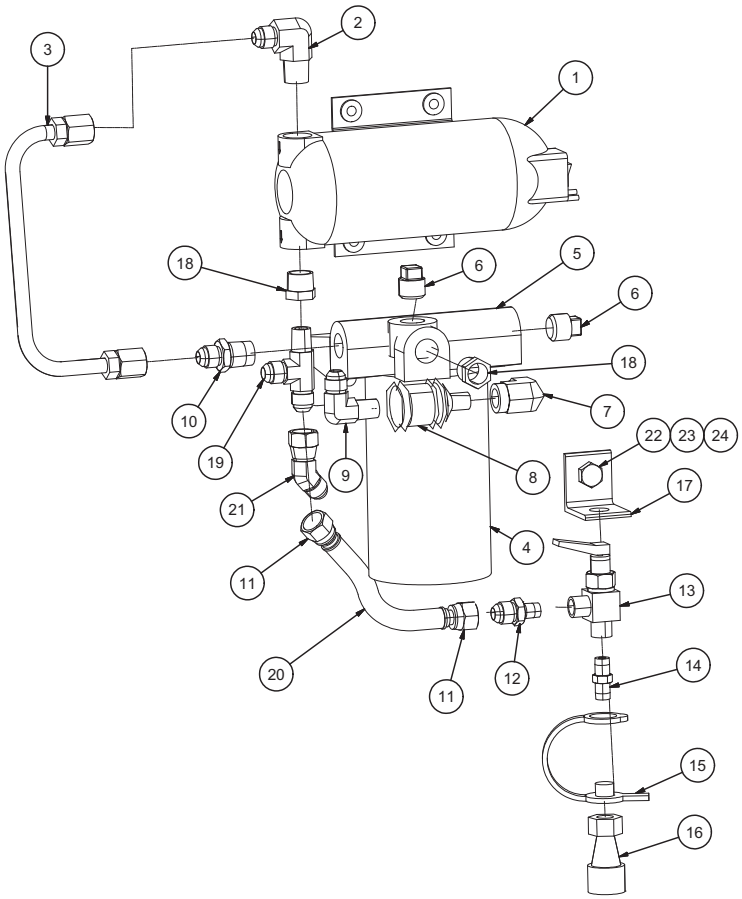

Ref #	Part Number	REV	Part Name	Description	Qty
1	4565252816		FUEL PUMP	AUX FUEL SUPPLY *(See Form 24811)*	1
2	07430020		ELBOW	3/8"NPT - 3/8"JIC	1
3	0970466140	A	TUBE ASSY	FUEL PUMP	1
4	451750014301	A	ELEMENT	FUEL FILTER	1
5	451750014302	-	FILTER	HEAD	1
6	07024003		PIPE PLUG	3/8"	2
7	4572077002	A	ELBOW	90DEG STR 1/4"XH	1
8	4525900691	-	VALVE	1/4" FUEL LINE CHECK	1
9	07430019		ELBOW	1/4"PIPE X #6 JIC	1
10	07430005		CONNECTOR	3/8"NPT-3/8"JIC	1
11	07431008		HOSE END	3/8"HOSE SWIVEL	2
12	07430043		CONNECTOR	3/8"JIC X1/8"MP	1
13	4525200464	A	VALVE	TOGGLE OPERATED SHUTOFF	1
14	4572077054	-	NIPPLE	1/8" PARKER	1
15	451915042901	-	PLUG	DUST	1
16	451915042903	-	COUPLER	1/8"NPT BRASS	1
17	0970630125	A	ANGLE	FUEL Q.D. BRACKET	1
18	07107002		BUSHING	3/8 X 1/4	2
19	07430128		TEE	3/8"X3/8"JIC-1/4"MPT	1
20	5003000202	D	HOSE	3/8" ID	0.5'
21	07430426		ELBOW	#6 X 45 SWIVEL	1
22	07383039		CAPSCREW	3/8"NC X 1-1/4	1
23	07014003		WASHER	3/8" LOCK	1
24	07012025		HEX NUT	3/8" NC	1

TEREX
CEDARAPIDS

Fuel Pump

Part No. 4565252816

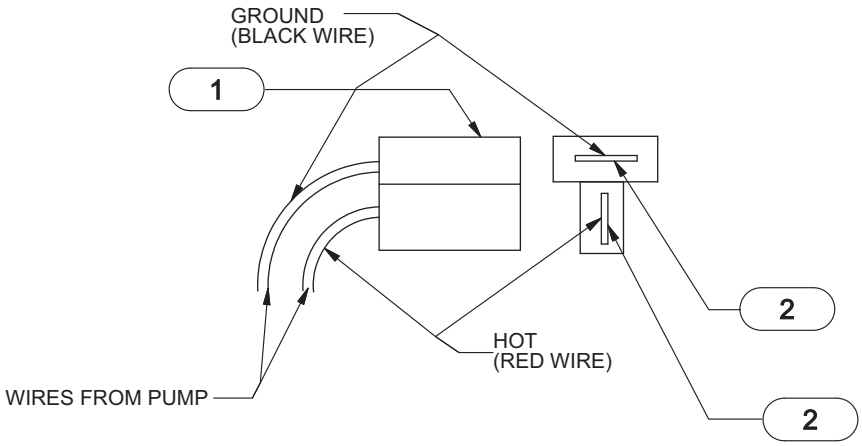

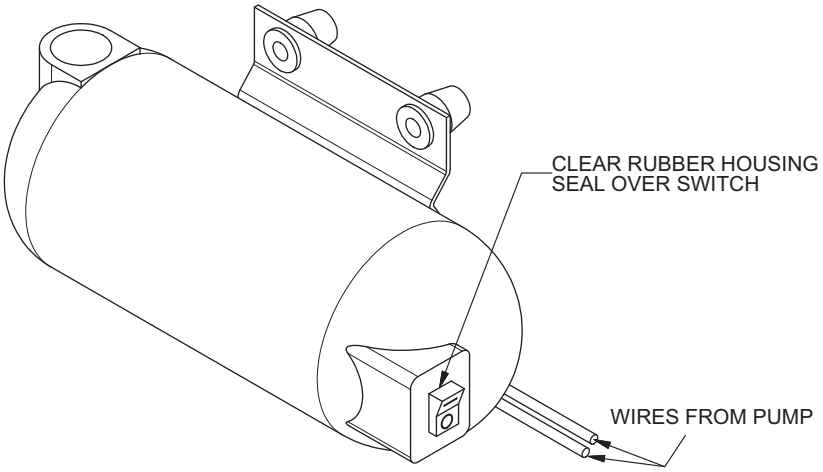

Ref. No.	Part Number	Description	Quantity
-	45652-528-16	Pump, Fuel - Complete	1
1	46275-010-11	Connector, 2-Way Male	1
2	46275-010-13	Terminal, Male	2

TEREX
CEDARAPIDS

Hydraulic Reservoir Package

Parts List No. 05231LCD

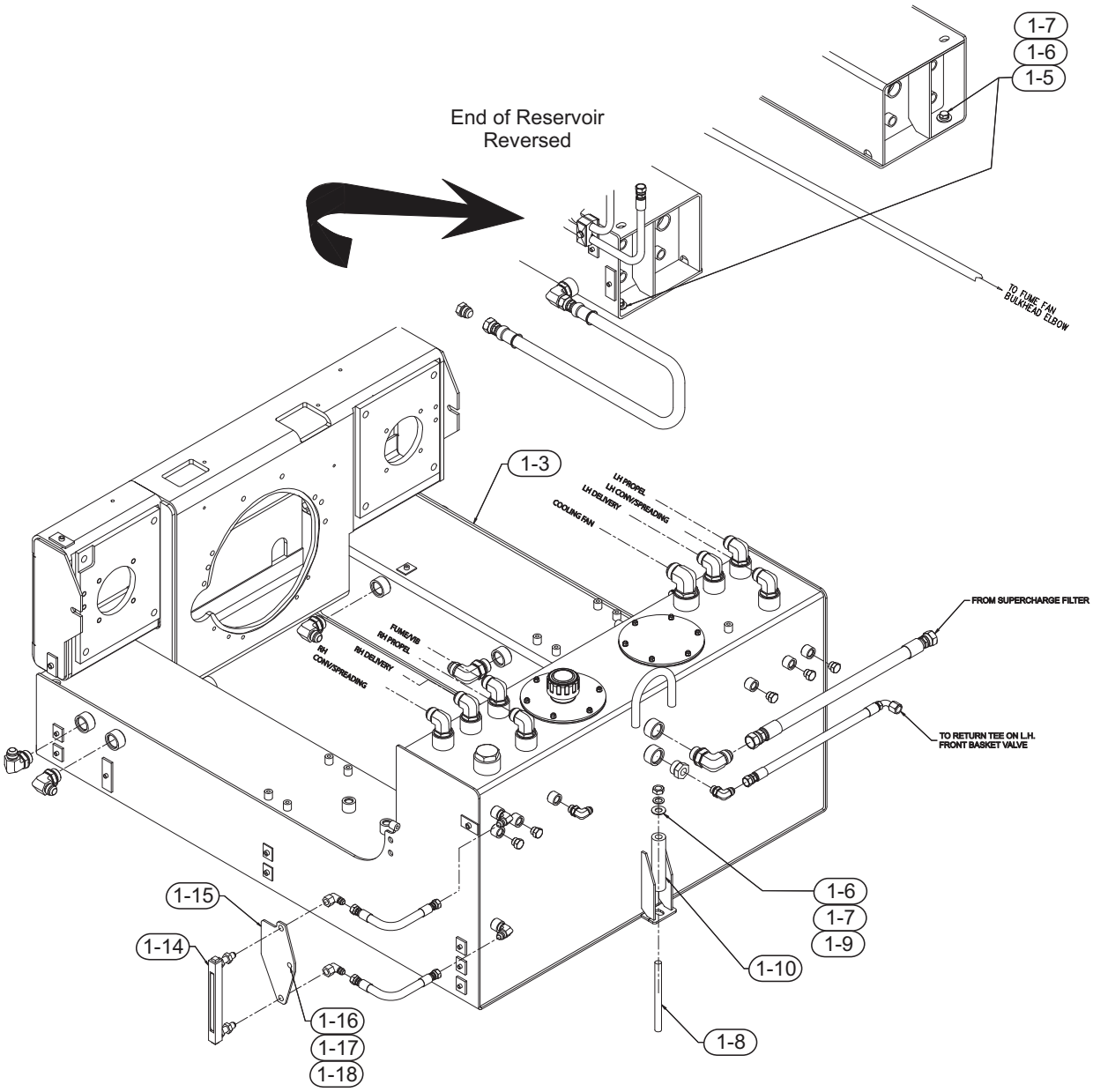

Ref #	Part Number	REV	Part Name	Description	Qty
-	0970665015		ASSEMBLY DRAWING	HYDRAULIC RESERVOIR INSTALLATION	REF
103	0970865030	C	RESERVOIR ASSEMBLY	HYDRAULIC *(See Form 24826-24827)*	1
105	07383099		CAPSCREW	5/8"NC X 1-1/4	2
106	07097013		WASHER	5/8" SAE	3
107	07014007		WASHER	5/8" LOCK	3
108	07187029	C	ADJ BOLT		1
109	07012029		HEX NUT	5/8" NC	1
110	0970432321	-	SPACER		1
114	4586500150	-	GAUGE	LIQUID LEVEL	1
115	0970466330	-	PLATE	SIGHT GAUGE MNTG PL	1
116	07383070		CAPSCREW	1/2"NC X 1-1/2	1
117	07014005		WASHER	1/2" LOCK	1
118	07012027		HEX NUT	1/2" NC	1

TEREX
CEDARAPIDS

Hydraulic Reservoir Sub-Assembly

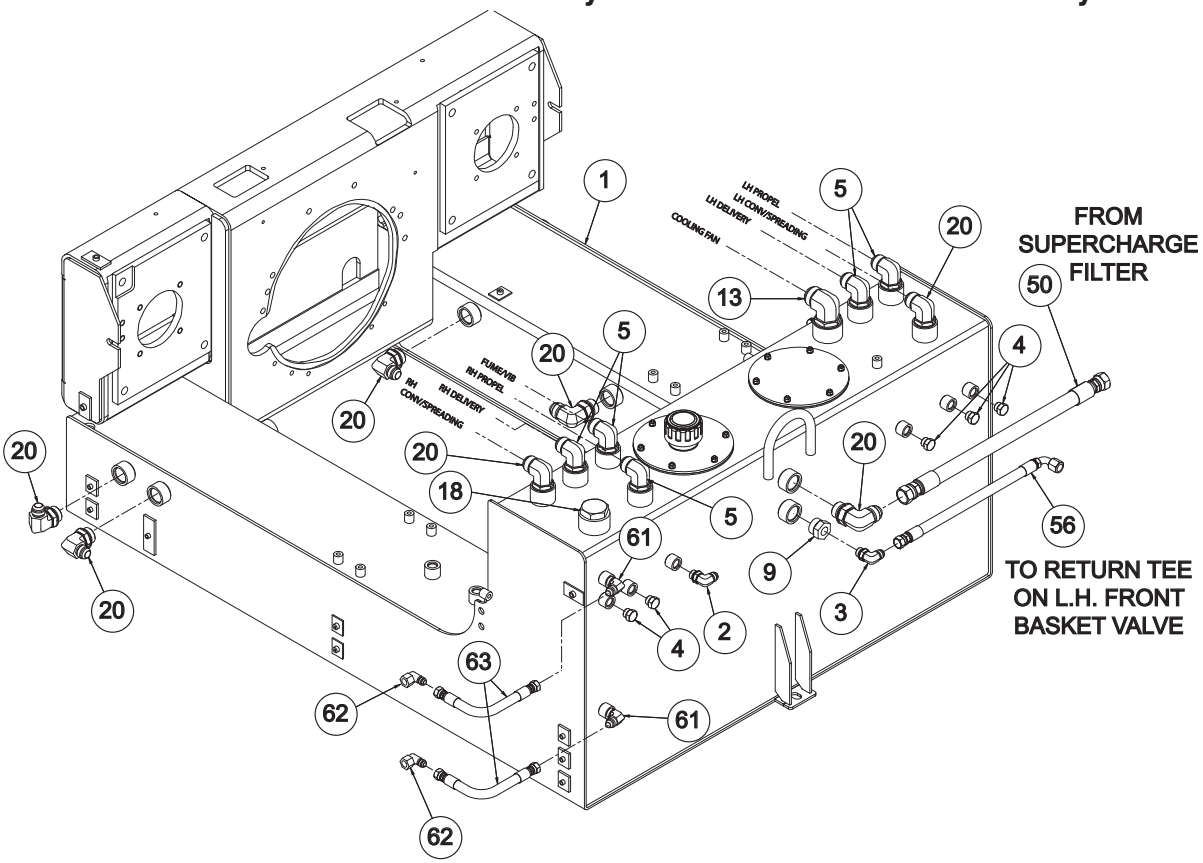

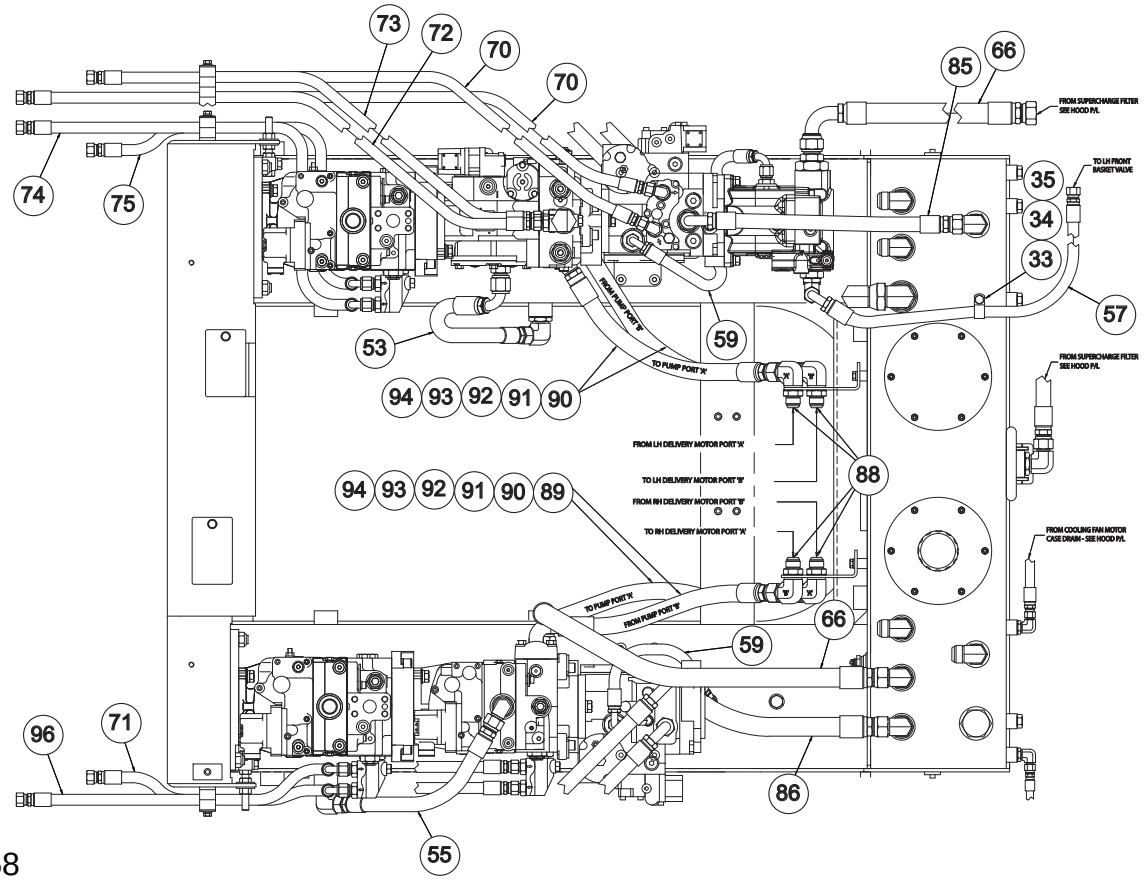

TEREX
CEDARAPIDS

Hydraulic Reservoir Sub-Assembly

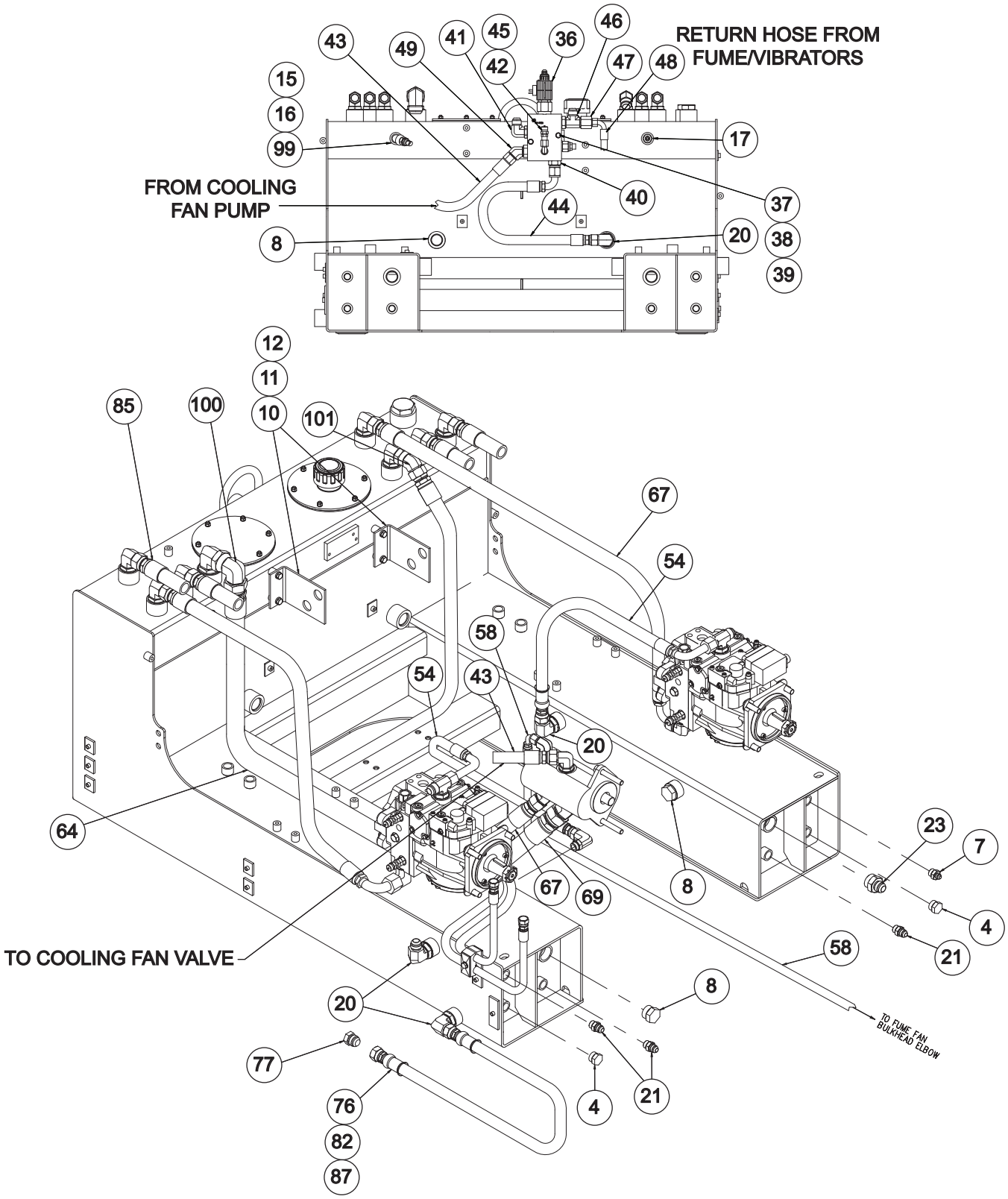

TEREX
CEDARAPIDS

Hydraulic Reservoir Sub-Assembly

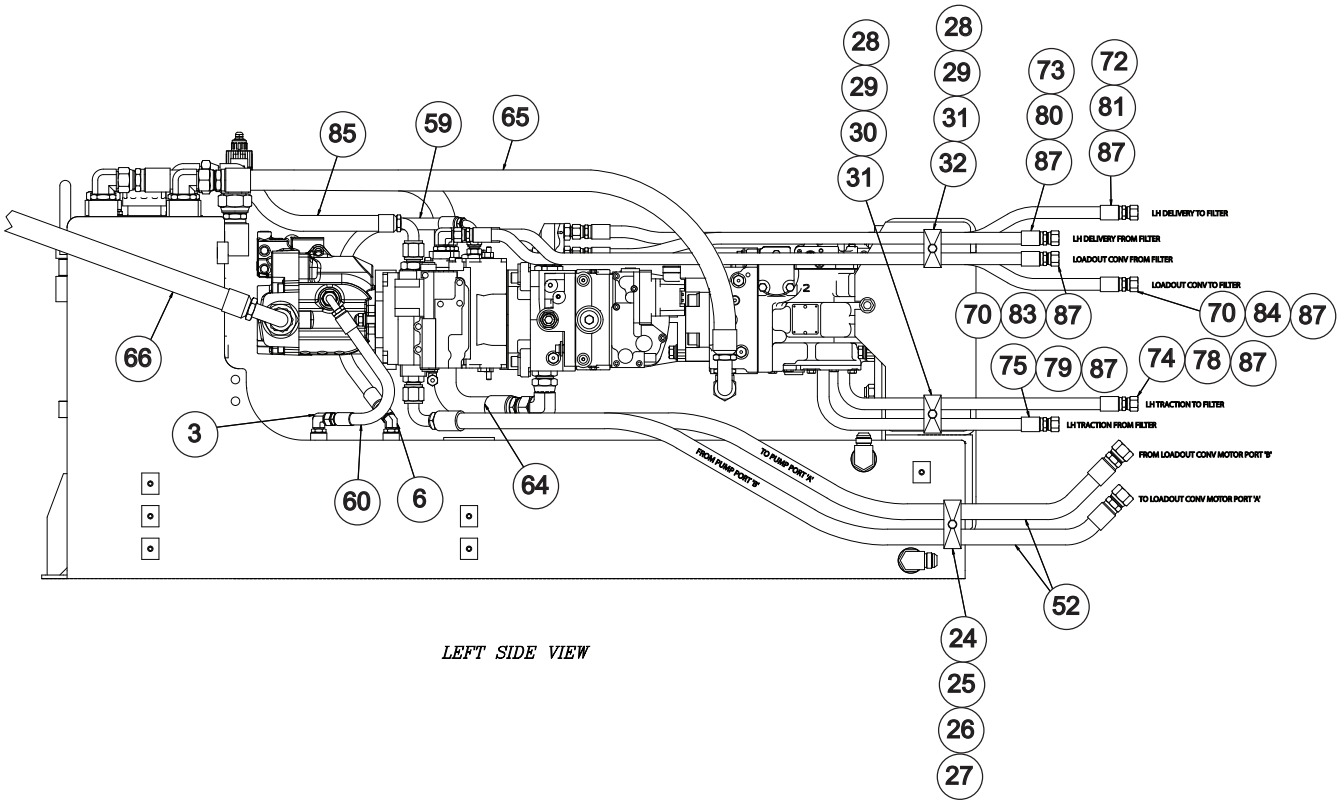

LEFT SIDE VIEW

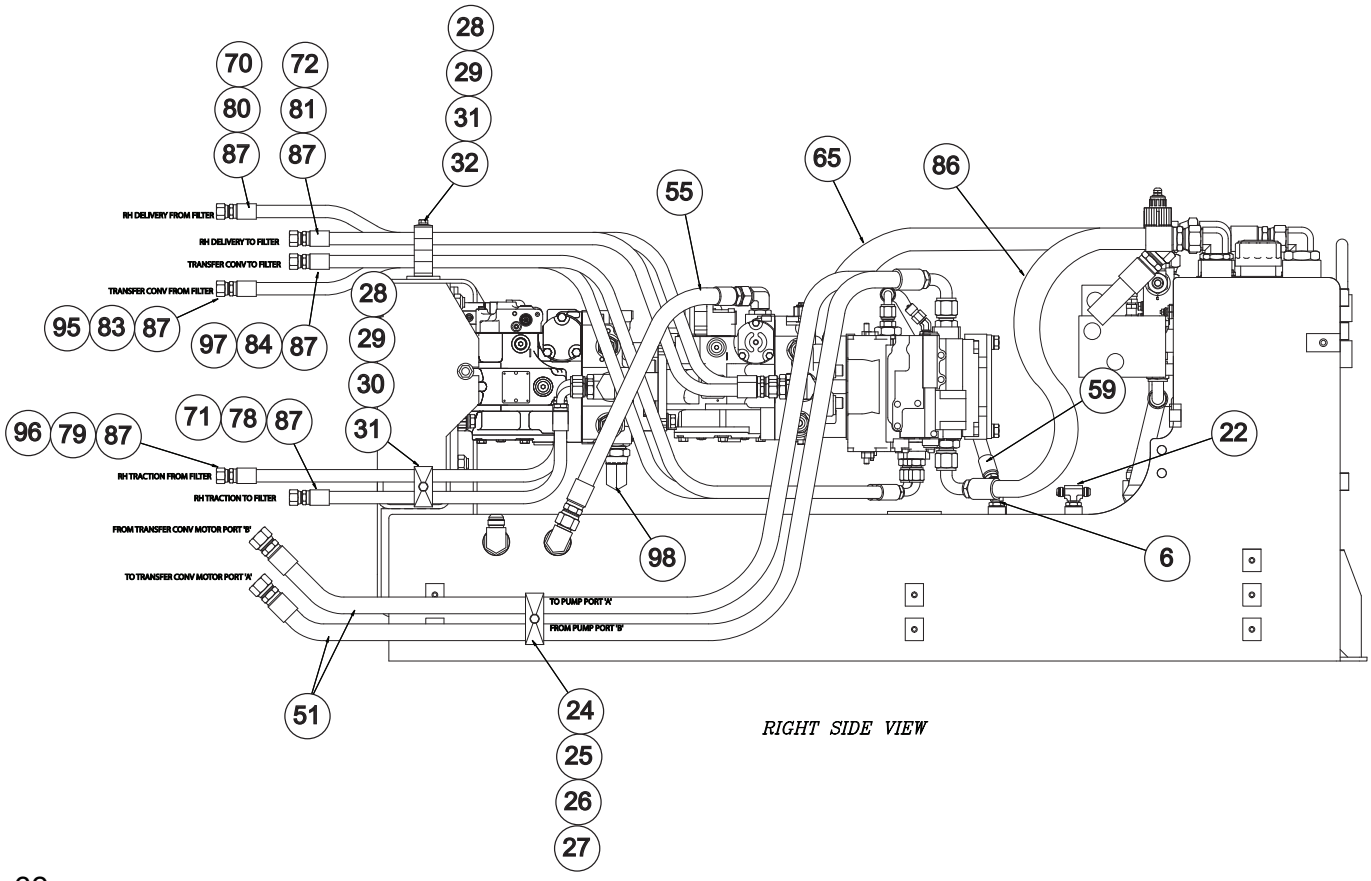

RIGHT SIDE VIEW

TEREX
CEDARAPIDS

Hydraulic Reservoir Sub-Assembly

Part No. 0970865030

Ref #	Part Number	REV	Part Name	Description	Qty
1	0970466391	C	RESERVOIR	HYDRAULIC *(See Form 24654)*	1
2	07430276		ELBOW	#8MSAE X #6MJIC 90	1
3	07430278		ELBOW	#8SAEM X #8JICM 90D	2
4	07430382		PLUG	#8SAE	7
5	07430285		ELBOW	#16SAE #16JIC	7
6	07430314		ELBOW	3/4"SAE 1/2"JIC	2
7	07430253		CONNECTOR	3/4"SAE 3/8"JIC	1
8	07430434		PLUG	#16	3
9	4572077528	-	REDUCER	1"SAE TO 1/2"SAE	1
10	0970466356	A	BRACKET	HOSE BRACKET	2
11	07383036		CAPSCREW	3/8" NC X 3/4"	4
12	07014003		WASHER	3/8" LOCK	4
13	07430286		ELBOW	1-5/8"SAE 1-1/4"JIC	1
14	07430320		ELBOW	1-5/16"SAE 1"JIC	1
15	4525100709	-	ADAPTER	1/2" MNPT X 14MM	1
16	4586500322	-	SENSOR	TEMP W/O-RING	1
17	4586500318	-	SENDER	TEMPERATURE	1
18	07430464	-	PLUG	#24	1
20	07430378		ELBOW	1-5/16" SAE 3/4"JIC	9
21	07430255		CONNECTOR	#8MSAE X #8MJIC	3
22	07430303		TEE	#8 BRANCH	1
23	07430264		CONNECTOR	1-5/16"SAE 3/4"	1
24	4508052938	-	CLAMP	HALF 1.05"ID TWIN	4
25	4508052932	-	PLATE	COVER	2
26	07383027		CAPSCREW	5/16"NC X 2-1/4	2
27	07014002		WASHER	5/16" LOCK	2
28	4508052925	-	CLAMP HALF	FOR 3/4" TUBE	12
29	4508052927	-	PLATE	COVER FOR CLAMP	4
30	07383026		CAPSCREW	5/16" NC X 2"	2
31	07014002		WASHER	5/16" LOCK	4
32	07383032		CAPSCREW	5/16"NC X 3-1/2	2
33	07509007		CLAMP	13/16"	1
34	07383036		CAPSCREW	3/8" NC X 3/4"	1
35	07014003		WASHER	3/8" LOCK	1
36	4525200748	B	VALVE	PROPORTIONAL FLOW	1
37	07383028		CAPSCREW	5/16"NC X 2-1/2	2
38	07014002		WASHER	5/16" LOCK	2
39	07014017		WASHER	5/16"	2
40	07430263		CONNECTOR	1-1/16"SE 3/4"J	1
41	07430282		ELBOW	#12SAEM-#12JICM 90D	1
42	07430417		ELBOW	7/16"SAE 3/8"JIC	1
43	0766304533	-	HOSE ASSY		1
44	0765302635	A	HOSE ASSY	3/4" ID X 26"	1
45	4508052718	-	FITTING	TEST 3/8"MALE JIC	1
46	07430294		TEE	3/4"	1
47	07430330		REDUCER	3/4" TO 1/2"	1
48	0765208635	A	HOSE ASSY	1/2" ID X 86"	1
49	07430318		ELBOW	#12SAE #12JIC	1
50	076530453301	A	HOSE ASSY		1

CONTINUED

TEREX
CEDARAPIDS

Hydraulic Reservoir Sub-Assembly

Part No. 0970865030

Ref #	Part Number	REV	Part Name	Description	Qty
51	0767306635	-	HOSE ASSY	3/4" ID X 66"	2
52	0767305635	-	HOSE ASSY	3/4" ID X 56"	2
53	0765302135	A	HOSE ASSY	3/4" ID X 21"	1
54	0765303038	A	HOSE ASSY	3/4" ID X 30"	2
55	0765302433	A	HOSE ASSY	3/4" ID X 24"	1
56	0765203335	A	HOSE ASSY	1/2" X 33"	1
57	0766205035	-	HOSE ASSY		1
58	0765206235	A	HOSE ASSY	1/2" ID X 62"	1
59	0765202235	A	HOSE ASSY	1/2" ID X 22"	2
60	0765201435	A	HOSE ASSY	1/2" ID X 14"	1
61	07430276		ELBOW	#8MSAE X #6MJIC 90	2
62	07430383		ELBOW	3/8" SWIVEL NUT	2
63	076500093301	A	HOSE ASSY		2
64	0763403233	-	HOSE ASSY	1" ID X 32"	1
65	0763404335	-	HOSE ASSY	1" ID X 43"	1
66	0763403735	-	HOSE ASSY	1" ID X 37	2
67	0763405433	A	HOSE ASSY	1" ID X 54"	1
68	0763404535	-	HOSE ASSY	1" ID X 45"	1
69	0763505035	-	HOSE ASSY	50"	1
70	0765205633	-	HOSE ASSY	1/2" ID X 56"	3
71	0765203635	A	HOSE ASSY	1/2" ID X 36"	1
72	0765204833	-	HOSE ASSY	1/2" ID X 48"	2
73	0765204033	A	HOSE ASSY	1/2" ID X 40"	1
74	0765205935	A	HOSE ASSY		1
75	0765205535		HOSE ASSY		1
76	0763305233	-	HOSE ASSY	3/4" ID X 52"	1
77	07430242		PLUG	3/4"	1
78	07470154		NAMEPLATE	TRAC CHG TO	2
79	07470155		NAMEPLATE	TRAC CHG FROM	2
80	07470165		NAMEPLATE	DELVRY CHG FROM	2
81	07470166		NAMEPLATE	DELVRY CHG TO	2
82	07470158		NAMEPLATE	RESERVOIR DRAIN	1
83	07470157		NAMEPLATE	CONV CHG FROM	2
84	07470156		NAMEPLATE	CONV CHG TO	2
85	0765302135	A	HOSE ASSY	3/4" ID X 21"	1
86	0765303835	A	HOSE ASSY		1
87	4632000120	-	CABLE TIE	3/8"-1-3/4"	13
88	07430415		ELBOW	3/4"JIC BULKHD	4
89	076830333701	-	HOSE ASSY	3/4" ID X 33"	1
90	076830283701	-	HOSE ASSY	3/4"ID X 28"	3
91	4525950811	A	O RING	1.296"ID 1-9/16"OD	4
92	4519100491	C	CLAMP	HALF 1"	8
93	07383056		CAPSCREW	7/16"NC X1-3/4	16
94	07014004		WASHER	7/16" LOCK	16
95	0765207235		HOSE ASSY	1/2"I.D. X 72"	1
96	0765204135	A	HOSE ASSY	RH TRACTION	1
97	0765206635	A	HOSE ASSY		1
98	07430406		ELBOW	1" SWIVEL	1
99	07286004		ELBOW	1/2" 45D STREET	1
100	07430465		ELBOW	1-1/4" SWIVEL	1
101	07430429		ELBOW	1" SWIVEL	1

TEREX
CEDARAPIDS

Hydraulic Reservoir Assembly

Part No. 0970466391

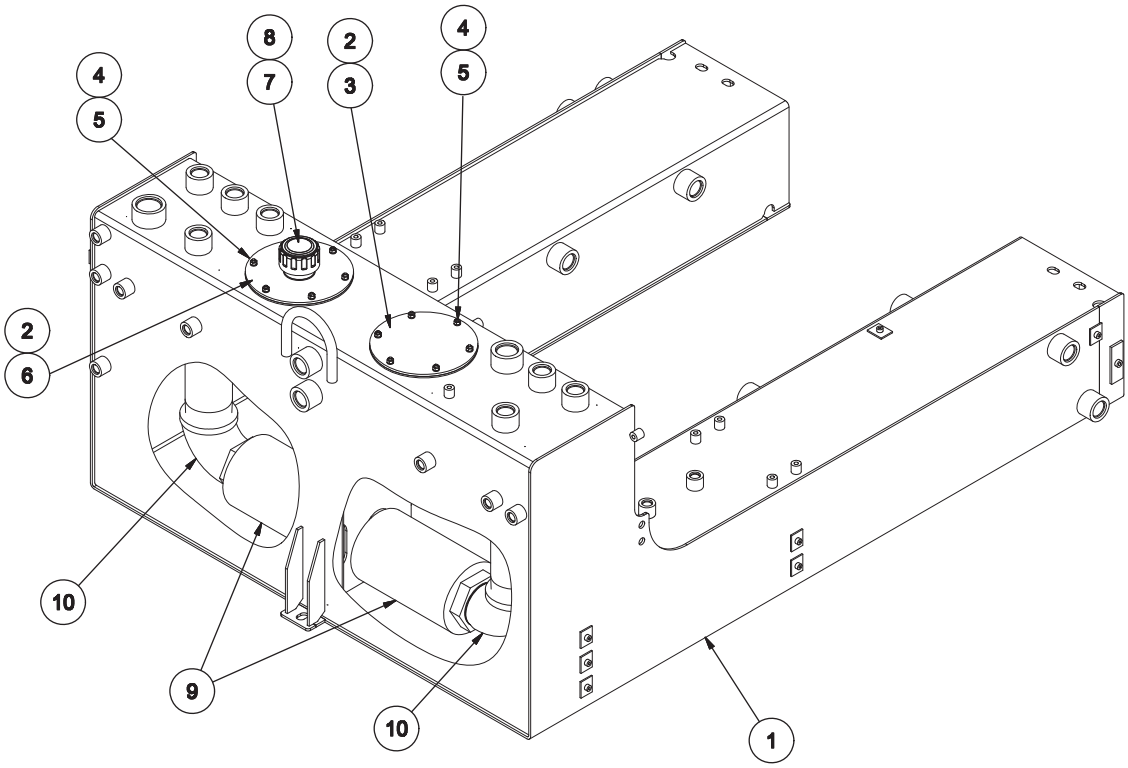

Ref #	Part Number	REV	Part Name	Description	Qty
1	0970466392		RESERVOIR	HYDRAULIC	1
2	440037509		GASKET	NEOPRENE	2
3	097046639101		COVER	8"	1
4	07014001		WASHER	1/4" LOCK	12
5	07012023		HEX NUT	1/4" NC	12
6	097046639102		COVER	WELDMENT	1
7	097046639103		CAP	FILLER BREATHER W/CHAIN	1
8	097046639104		STRAINER	FILL	1
9	4508051069		STRAINER		2
10	07061011		ELBOW	3" 90 DEGREE STREET	2

Return to Table of Contents Page

TEREX CEDARAPIDS

Table of Contents

Power Mounting - 05234GCD

Ref No.	Description	Page No.
1	Power Mounting Illustration - Part 1	2
2	Power Mounting Illustration - Part 2	3
3	Power Mounting Parts List	4
4	Engine Sub-Assembly Illustration - Part 1	5
5	Engine Sub-Assembly Illustration - Part 2	6
6	Engine Sub-Assembly Parts List	7

Return to Table of Contents Page

TEREX
CEDARAPIDS

Power Mounting Assembly

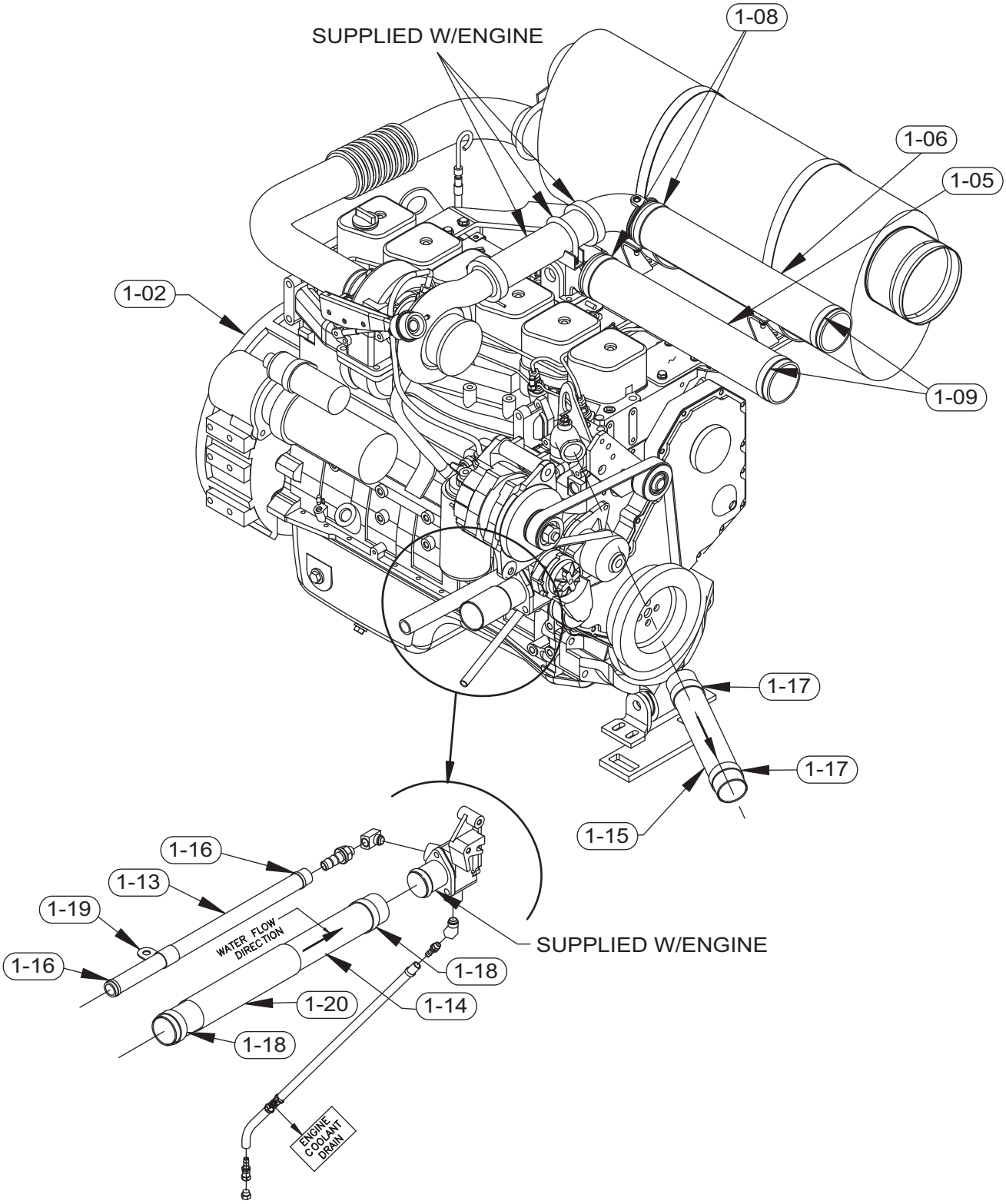

Return to Table of Contents Page

TEREX
CEDARAPIDS

Power Mounting Assembly

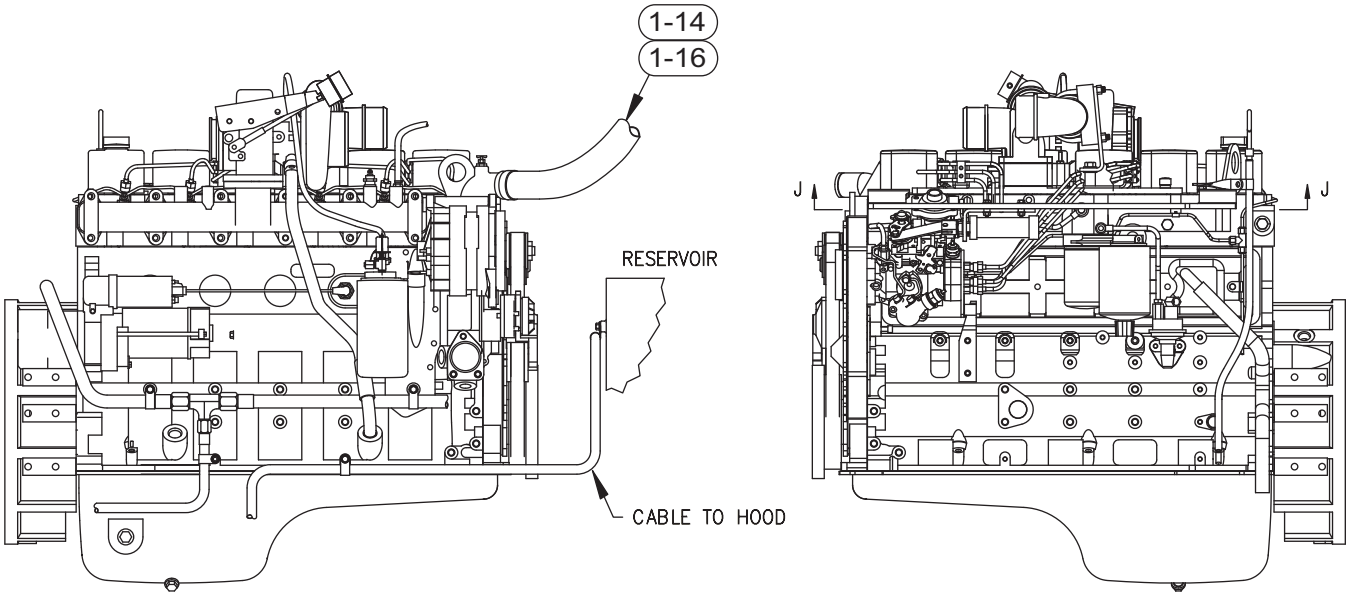

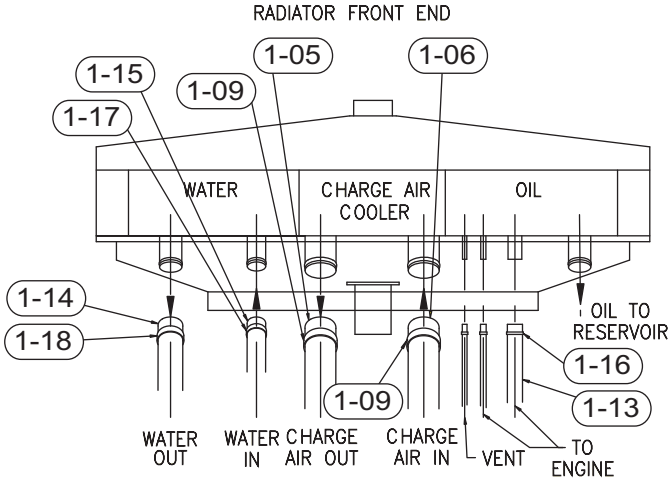

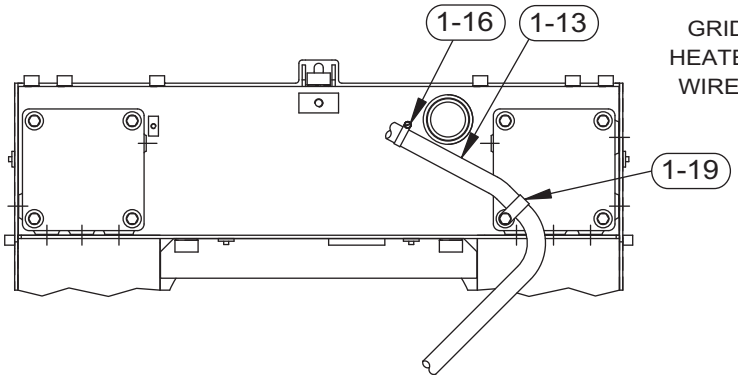

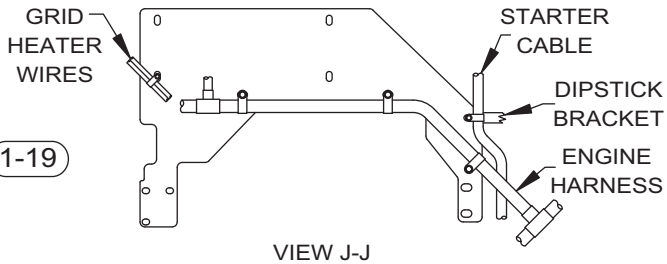

VIEW J-J
UNDERSIDE OF MUFFLER PLATE

Return to Table of Contents Page

TEREX
CEDARAPIDS

Power Mounting Assembly

Parts List No. 05234GCD

Ref #	Part Number	Part Name	Description	Qty
1-01	0970432463	ASSY DRG	400/500 TIER 3 POWER	REF
1-02	0970830044	SUB-ASSY	500 PWER MTG	1
1-06	0970432520	HOSE	3" HOT AIR BLOWER 50	1
1-07	0970432521	HOSE	3" HOT AIR BLOWER 54	1
1-08	4519100771	CLAMP	3.5" T-BOLT	2
1-09	4571000208	CLAMP	MUFFLER CLAMP (Not Used on 05234GCA)	2
1-13	0970432310	HOSE	COOLANT FILL	1
1-14	0970432294	HOSE	2.13"ID	1
1-15	0970432293	HOSE	1.75"ID	1
1-16	4519100789	CLAMP	1.31" T-BOLT	2
1-17	4519100775	CLAMP	T-BOLT 2.25"	2
1-18	4618500134	CLAMP	T-BOLT 2.25" MIN DI	2
1-19	07509011	CLAMP	1-3/8"	1
1-20	4519150805	SLEEVE	3" HOSE PROTECTOR	1
1-22	4526300103	INSULATION	3" WIDE WRAP	12'
1-23	4534500115	TAPE	ALUMINUM 2"	30'

Return to Table of Contents Page

TEREX
CEDARAPIDS

Engine Sub-Assembly

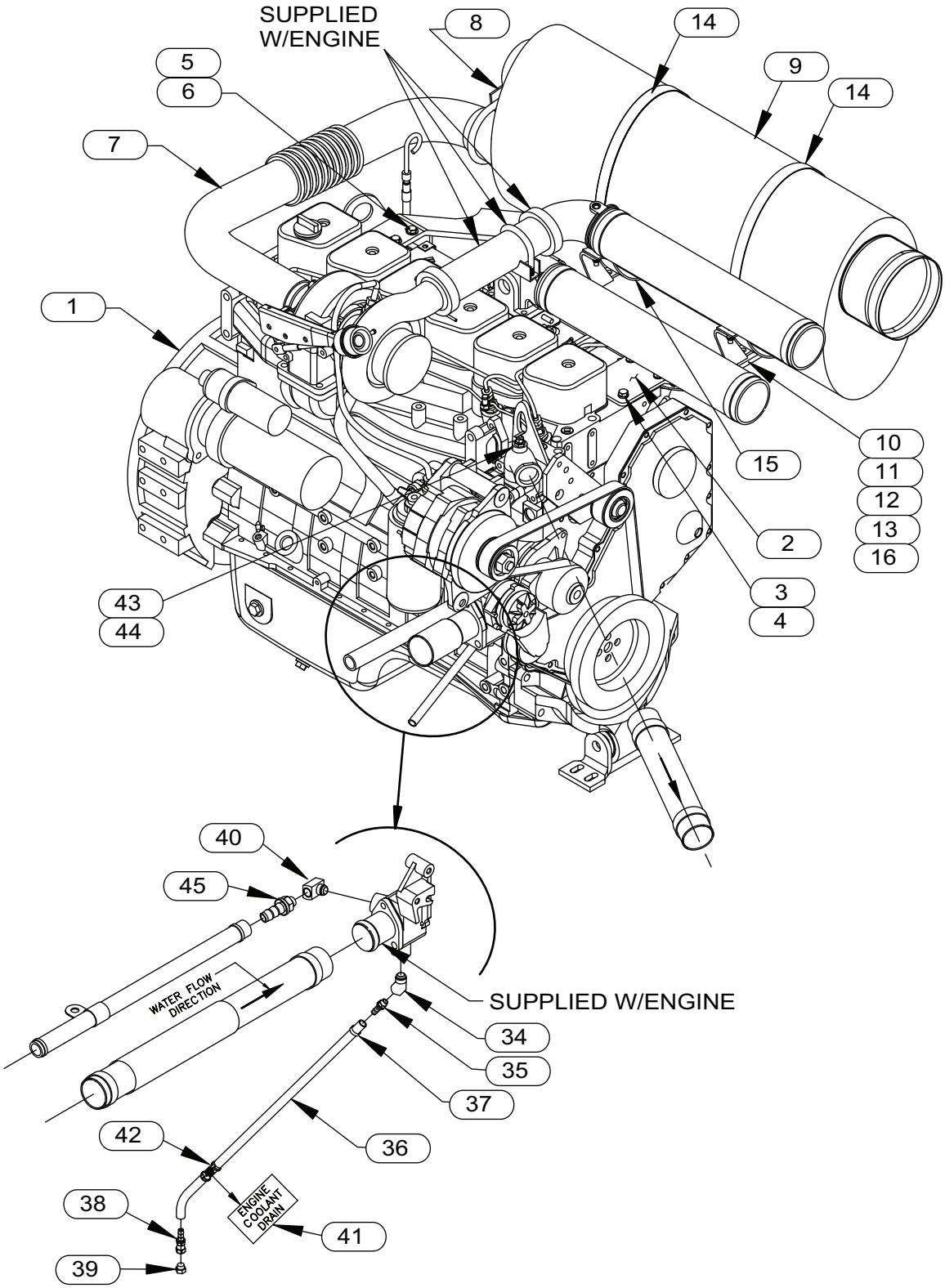

Return to Table of Contents Page

TEREX
CEDARAPIDS

Engine Sub-Assembly

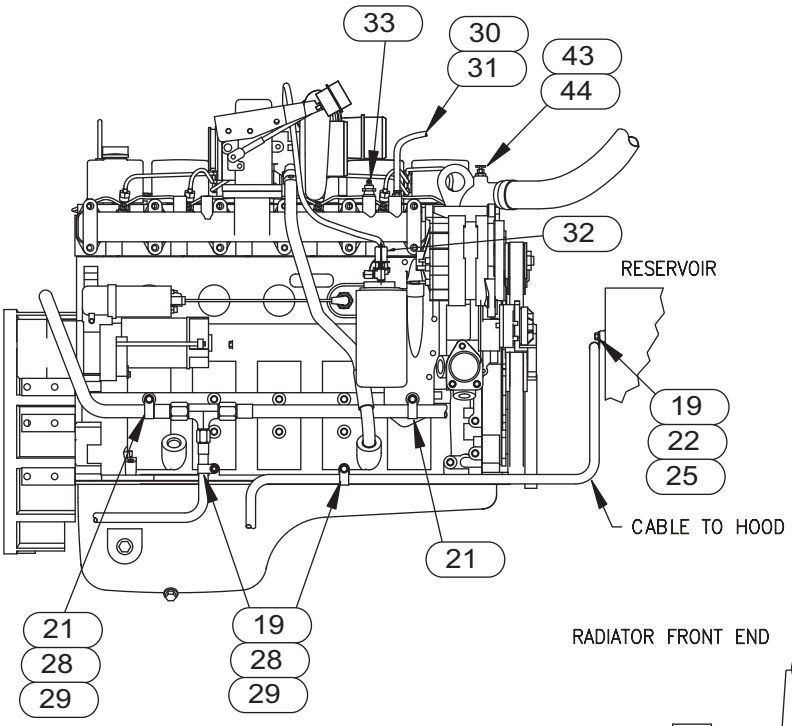

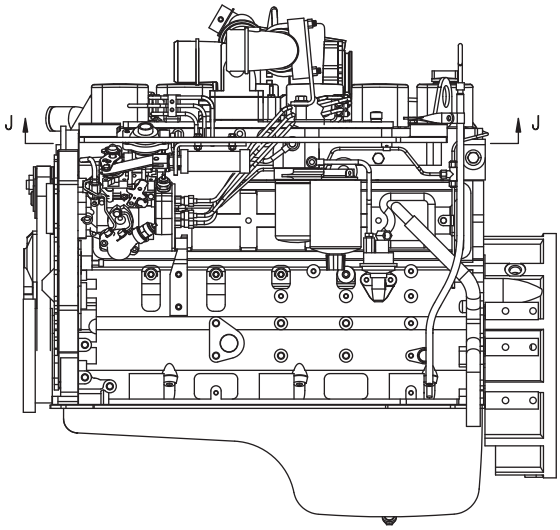

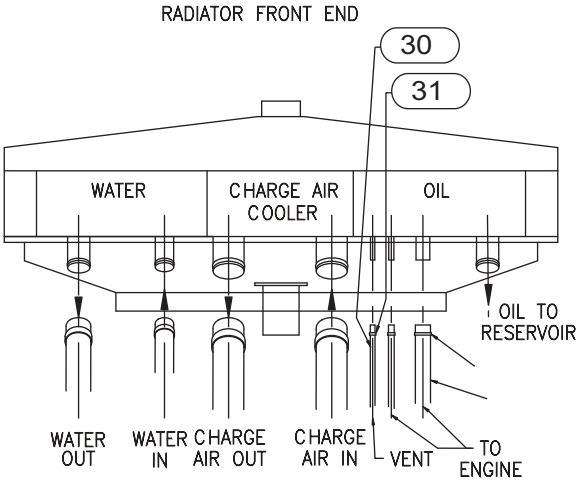

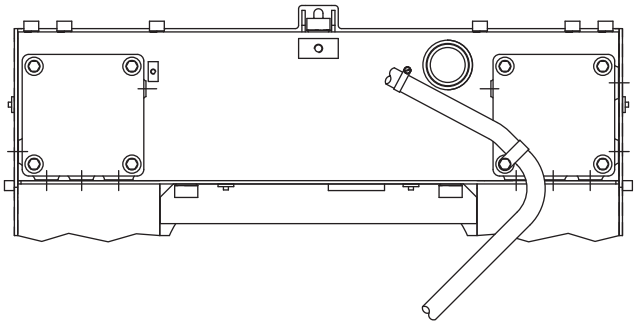

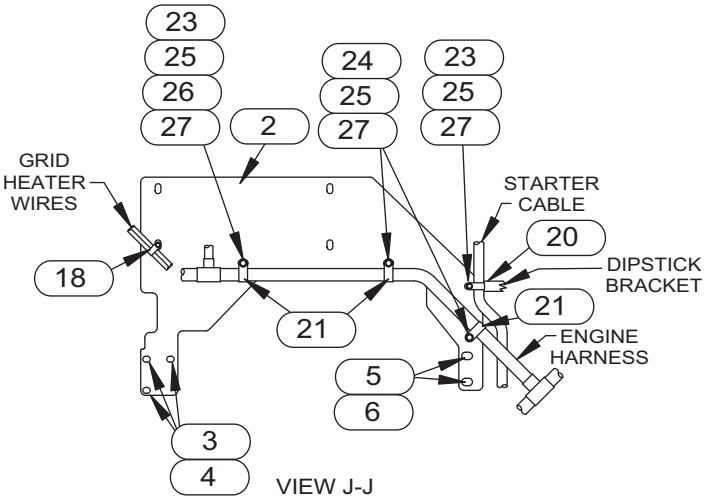

VIEW J-J
UNDERSIDE OF MUFFLER PLATE

Return to Table of Contents Page

TEREX
CEDARAPIDS

Engine Sub-Assembly

Parts List No. 05234GCC

Ref #	Part Number	Part Name	Description	Qty
1	4593000166	ENGINE	CUMMINS QSB6.7	1
2	0970432452	PLATE	MUFFLER MOUNT	1
3	4589030002	CAPSCREW	M10 X 30 HEX HD	3
4	4589030110	LOCKWASHER	10MM STYLE 79	3
5	4589030111	WASHER	M12 X 18 X 2.5	2
6	4589030054	CAPSCREW	SOC. HD. 12MM X	2
7	0970432432	TUBE	EXHAUST	1
8	4571000203	CLAMP	3" SADDLE	1
9	0970430631	MUFFLER	FUME RECOVER	1
10	0970432173	BRACKET	MUFFLER MOUNT6BTA	2
11	07014018	WASHER	3/8"	7
12	07072053	CARR BOLT	3/8"NC X1-1/4"	4
13	07012025	HEX NUT	3/8" NC	4
14	4618500126	CLAMP	STRAP	2
15	4571000214	CLAMP	MUFFLER MOUNTING	2
16	07014003	WASHER	3/8" LOCK	4
18	07509004	HOSE CLAMP	5/8"	1
19	07509005	CLAMP	11/16"	3
20	07509006	CLAMP	3/4"	1
21	07509008	HOSE CLAMP	15/16"	5
22	07383036	CAPSCREW	3/8" NC X 3/4"	1
23	07383039	CAPSCREW	3/8"NC X 1-1/4"	2
24	07072053	CARR BOLT	3/8"NC X1-1/4"	2
25	07014003	WASHER	3/8" LOCK	5
26	07014018	WASHER	3/8"	1
27	07012025	HEX NUT	3/8" NC	4
28	4589030042	CAPSCREW	M8 X 20 X 1.25	3
29	4589030105	WASHER	M8 STYLE 127B LOC	3
30	5003000202	HOSE	3/8" ID	4.3'
31	4519100428	CLAMP	25/32" HOSE	2
32	4586500217	SENSOR	OIL PRESSURE	1
33	4586500319	SENDER	TEMPERATURE	1
34	4519100779	ELBOW	45 DEG. STREET	1
35	4519151063	FITTING	1/2"BARB X1/2"NPT	1
36	5003000203	HOSE	1/2" ID	7.5'
37	4519100434	CLAMP	9/16"-1-1/16"	1
38	07431009	FITTING	1/2" HOSE SWIVEL	1
39	07430240	PLUG	#8	1
40	4519100780	ELBOW	3/4" STREET	1
41	07470169	NAMEPLATE	COOLANT DRAIN	1
42	4632000120	CABLE TIE	3/8"-1-3/4"	1
43	4572076901	REDUCER	1/4"P TO 1/8"P	1
44	4525000708	VAVLE	1/8" PET COCK	1
45	4519151065	FITTING	1" HOSE BARB X3/4	1

Return to Table of Contents Page

TEREX
CEDARAPIDS

Table of Contents

Pump Drive - 05231LBC

Ref No.	Description	Page No.
1	Pump Drive Illustration - Part 1	2
2	Pump Drive Illustration - Part 2	3
3	Pump Drive Illustration - Part 3	4
4	Pump Drive Illustration - Part 4	5
5	Pump Drive Parts List - Part 1	6
6	Pump Drive Parts List - Part 2	7

Return to Table of Contents Page

TEREX
CEDARAPIDS

Pump Drive

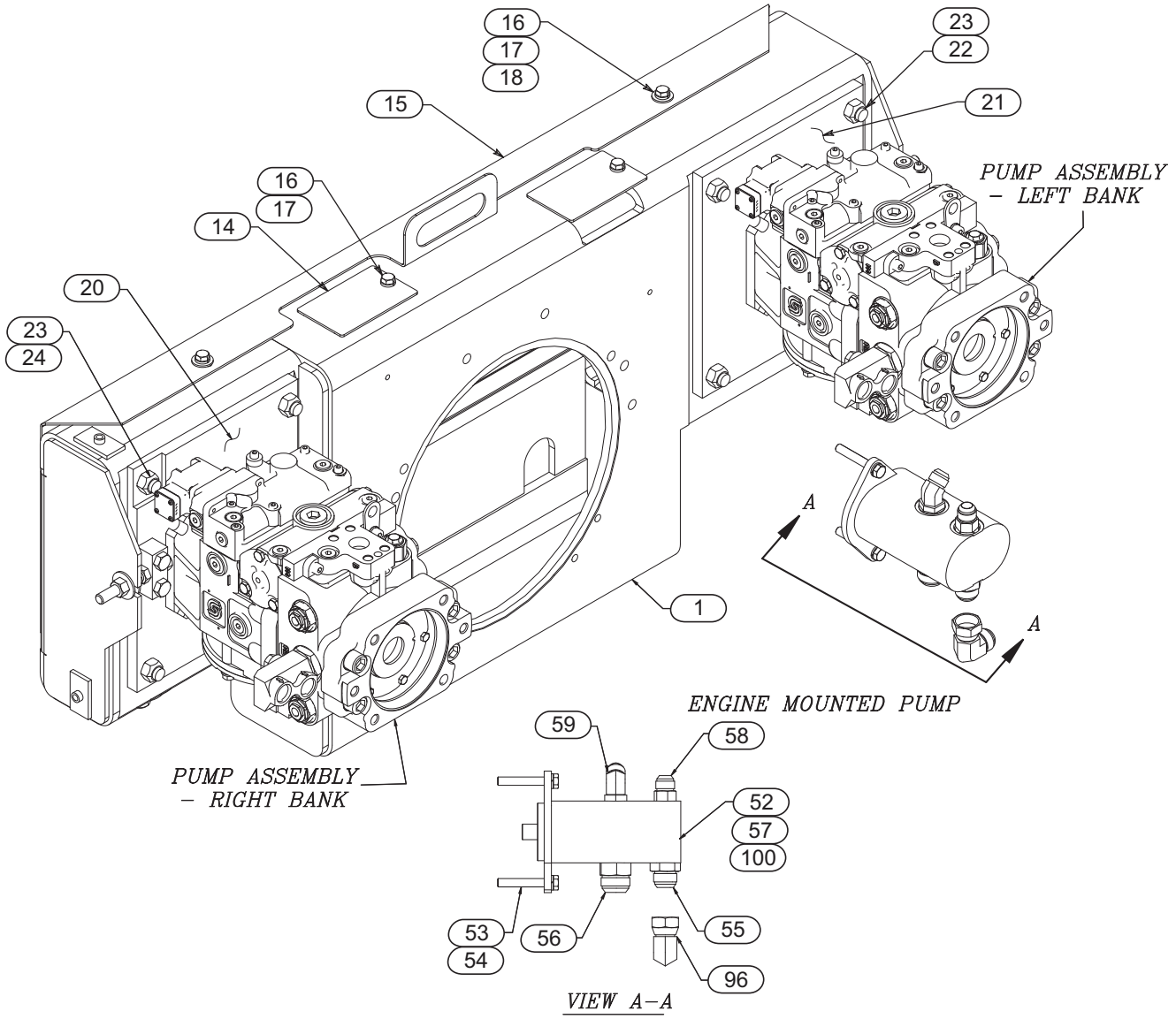

Return to Table of Contents Page

TEREX
CEDARAPIDS

Pump Drive

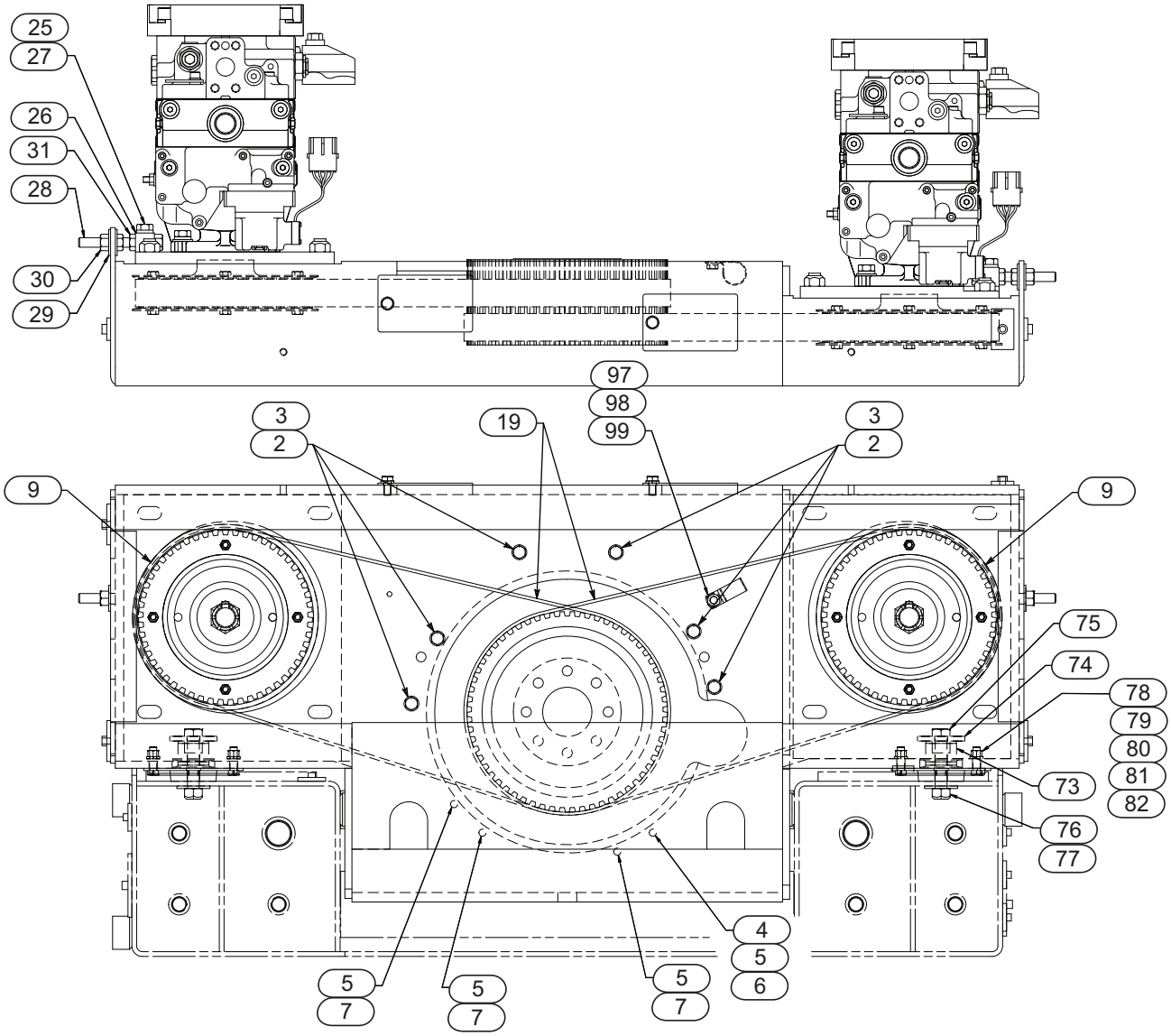

Return to Table of Contents Page

TEREX
CEDARAPIDS

Pump Drive

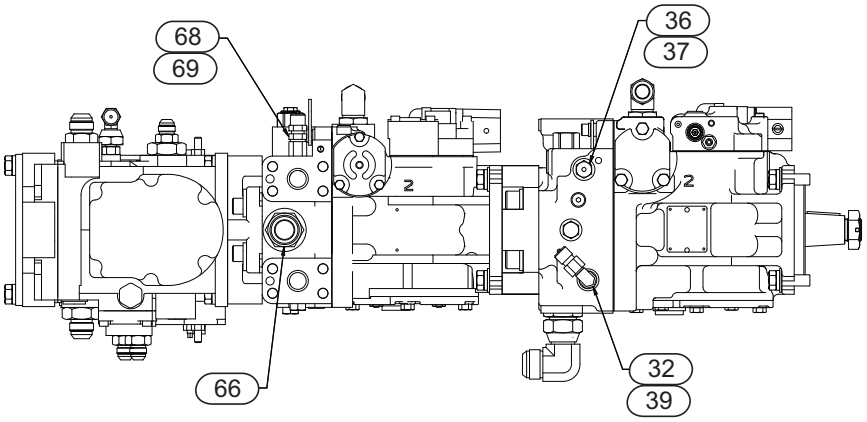

RIGHT BANK – LEFT SIDE

RIGHT BANK – RIGHT SIDE

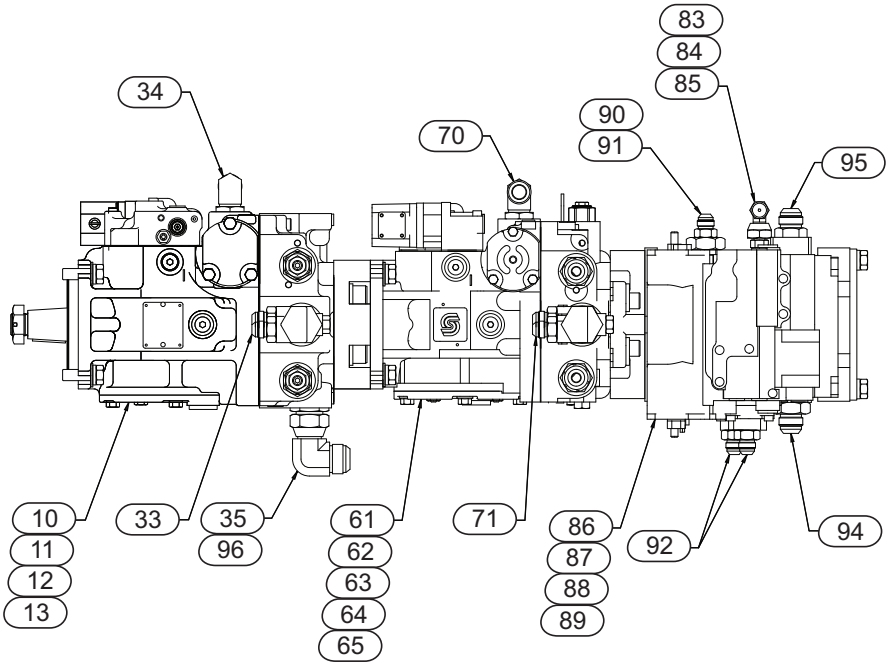

Return to Table of Contents Page

TEREX
CEDARAPIDS

Pump Drive

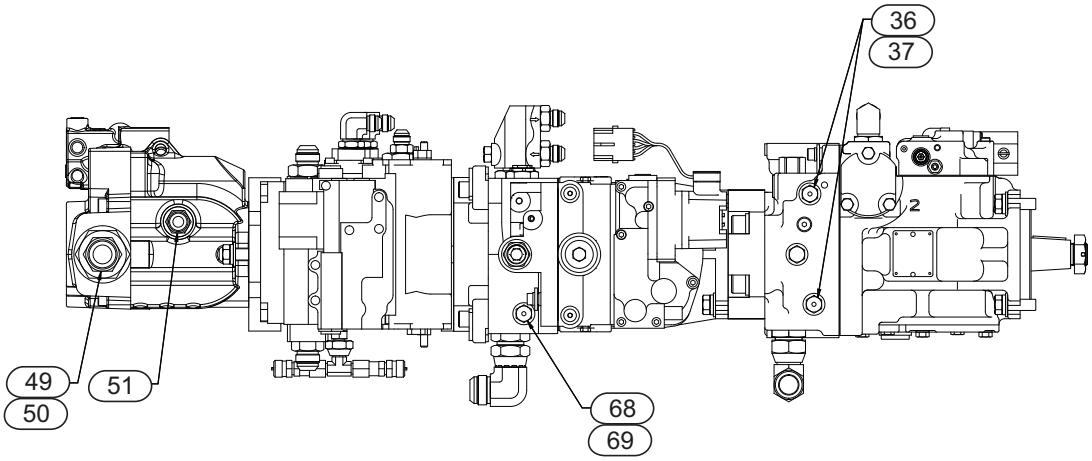

LEFT BANK – LEFT SIDE

LEFT BANK – RIGHT SIDE

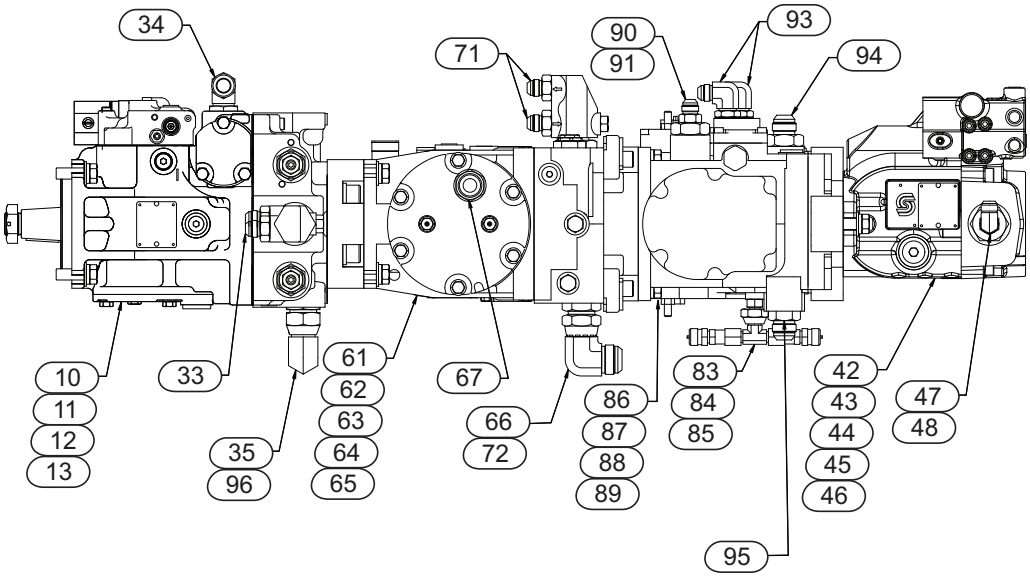

Return to Table of Contents Page

TEREX
CEDARAPIDS

Pump Drive

Parts List No. 05231LBC

Ref #	Part Number	REV	Description	Qty
-	0970830058	A	ASSEMBLY DRAWING*PUMP DRIVE ROADMIX	REF
1	0970415572	U	WELDMENT*PUMP DRIVE HSG	1
2	07383054	0	CAPSCREW*7/16"NC X1-1/4	6
3	07014004	0	WASHER*7/16" LOCK	6
4	07383029	0	CAPSCREW*5/16"NC X 2-3/4	1
5	07014002	0	WASHER*5/16" LOCK	4
6	07012024	0	HEX NUT*5/16" NC	1
7	4589030305	0	CAPSCREW*SH M8 X 35	3
9	0970432053	0	SPROCKET*PUMP FOR 90L075	2
10	4508000707	0	PUMP*75CC PROPEL - REMIX	2
11	07383070	0	CAPSCREW*1/2"NC X 1-1/2	8
12	07014005	0	WASHER*1/2" LOCK	8
13	07465001		WASHER*1/2" HRD FLAT	8
14	0970431418	C	COVER*INSPECTION	2
15	0970431520	D	COVER*	1
16	07383036	0	CAPSCREW*3/8" NC X 3/4"	4
17	07014003		WASHER*3/8" LOCK	4
18	07014018	0	WASHER*3/8"	2
19	4582500404	-	BELT*125 TEETH 37MM WIDE	2
20	0970432392	-	RH PLATE*PUMP MOUNT	1
21	0970431558	A	PLATE*PUMP MOUNT	1
22	07072197	0	CARR BOLT*5/8"NC X 1-3/4"	7
23	4589010233	-	HEX NUT*5/8"LOCK	8
24	07072148	0	CARR BOLT*5/8"NC X 1-1/2"	1
25	07014005	0	WASHER*1/2" LOCK	4
26	0970431241	B	BLOCK*ADJ BOLT	2
27	07383071	0	CAPSCREW*1/2"NC X 1-3/4"	4
28	07285009	A	ADJ BOLT*1/2"NC X 4"	2
29	07465001	0	WASHER*1/2" HRD FLT	4
30	07012027	0	HEX NUT*1/2" NC	2
31	07017027	0	HEX NUT*1/2" NC JAM	4
32	07430275	0	ELBOW*#6SAEM X #6JICM 90D	1
33	07430256		CONNECTOR*#10SAE #8JIC	4
34	07430282		ELBOW*#12SAE #12JIC	2
35	07430267	0	CONNECTOR*#16SAE #16JIC	2
36	4508052704	-	FITTING*SAE #4 PORT	3
37	4572077554	-	REDUCER*SAE #6 TO SAE #4	3
39	4508052718	-	FITTING*TEST 3/8"MALE JIC	1
40	0970437674	B	HARNESS*TIER III ENGINE	1
41	0970437681	F	HARNESS*PUMP400/500RXRMRX	1
42	4508000288	A	HYD PUMP*25CC PRESSURE CO	1
43	4524012565	-	O RING*3.739"ID X .070"WA	1
44	07383070	0	CAPSCREW*1/2"NC X 1-1/2	2
45	07014005		WASHER*1/2" LOCK	2
46	07465001	0	WASHER*1/2" HRD FLT	2
47	4572077528	-	REDUCER*1"SAE TO 1/2"SAE	1
48	07430278	0	ELBOW*#8SAEM X #8JICM 90D	1
49	4572077633	-	REDUCER*SAE#24 EXT SAE#16	1
50	07430267		CONNECTOR*#16SAE TO #16JIC	1
51	07430256	0	CONNECTOR*#10SAE #8JIC	1

Return to Table of Contents Page

TEREX
CEDARAPIDS

Pump Drive

Parts List No. 05231LBC

Ref #	Part Number	REV	Description	Qty
52	4508000359	-	PUMP*HYDRAULIC	1
53	4589030364	-	CAPSCREW*M12 X 1.75 X 80	2
54	4589030111	A	WASHER*M12 X 18 X 2.5	2
55	07430320	0	ELBOW*1-5/16"SAE 1"JIC	1
56	07430269	0	CONNECTOR*1-5/16"SAE 1-1/	1
57	4524012565	-	O RING*3.739"ID X .070"WA	1
58	07430466	0	ELBOW*3/4"SAE 1/2"JIC	1
59	07430282	0	ELBOW*#12SAEM-#12JICM 90D	1
61	4508000708	0	PUMP*55CC - REMIX AUGER	2
62	4524012604	0	O-RING*	2
63	07383070		CAPSCREW*1/2"NC X 1-1/2"	8
64	07014005		WASHER*1/2" LOCK	8
65	07465001		WASHER*1/2" HRD FLAT	8
66	07430267	0	CONNECTOR*#16SAE #16JIC	2
67	07430263	0	CONNECTOR*1-1/16"SE 3/4"J	1
68	4508052704	-	FITTING*SAE #4 PORT	2
69	4572077554	-	REDUCER*SAE #6 TO SAE #4	2
70	07430282	0	ELBOW*#12SAEM-#12JICM 90D	1
71	07430256		CONNECTOR*#10SAE #8JIC	4
72	07430406	0	ELBOW*1" SWIVEL	1
73	4590501707	A	MOUNT*ENGINE	2
74	08049A06	A	WASHER*1/4" THICK	2
75	07383106	0	CAPSCREW*5/8" NC X 3"	2
76	4589010229	B	LOCKNUT*5/8" NC	2
77	07014022	0	WASHER*5/8"	2
78	07012025	0	HEX NUT*3/8" NC	4
79	07014003	0	WASHER*3/8" LOCK	8
80	07383039	0	CAPSCREW*3/8"NC X 1-1/4	8
81	07438009	0	WASHER*3/8"SHKP LK	4
82	07014018	0	WASHER*3/8"	8
83	4508052718	-	FITTING*TEST 3/8"MALE JIC	4
84	07430252	0	CONNECTOR*#6SAEM X #6JICM	2
85	07430355	0	TEE*3/8"JIC SWIVEL NUT	2
86	4508000704	0	PUMP*SERIES 42	2
87	4524012603	0	O-RING*	2
88	07383070		CAPSCREW*1/2"NC X 1-1/2"	4
89	07014005		WASHER*1/2" LOCK	4
90	4572077528	-	REDUCER*1"SAE TO 1/2"SAE	2
91	07430255	0	CONNECTOR*#8MSAE X #8MJIC	2
92	07430256	0	CONNECTOR*#10SAE #8JIC	2
93	07430279	0	ELBOW*#10SAE #8JIC	2
94	07430264	0	CONNECTOR*1-5/16"SAE 3/4"	2
95	07430263	0	CONNECTOR*1-1/16"SE 3/4"J	4
96	07430406	0	ELBOW*1" SWIVEL	3
97	07509009	0	HOSE CLAMP*1-1/8"	1
98	07383020	0	CAPSCREW*5/16"NC X 3/4"	1
99	07014003	0	WASHER*3/8" LOCK	1
100	0970415422	B	GASKET*SAE ‘B’ 2-BOLT	1

Return to Table of Contents Page

TEREX CEDARAPIDS

Table of Contents

Front Remix Auger & Drive Components - 05231UCB

Ref No.	Description	Page No.
1	Remix Auger Drive Components - Illustration 1	2
2	Remix Auger Drive Components - Illustration 2	3
3	Remix Auger Drive Components - Parts List	4
4	Remix Auger Drive Gearbox - Illustration	5
5	Remix Auger Drive Gearbox - Parts List	6

Return to Table of Contents Page

TEREX
CEDARAPIDS

Remix Auger Drive Components

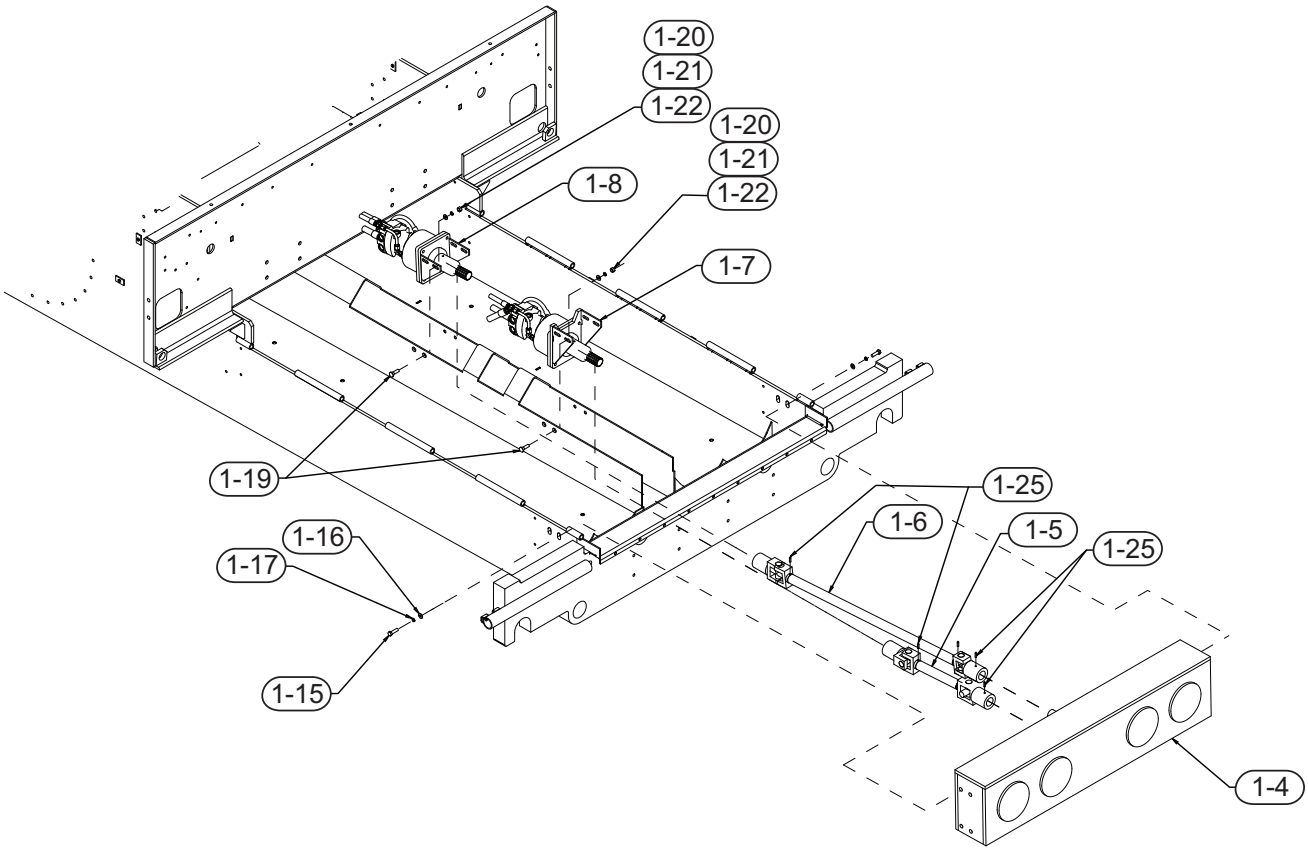

Return to Table of Contents Page

TEREX
CEDARAPIDS

Remix Auger Drive Components

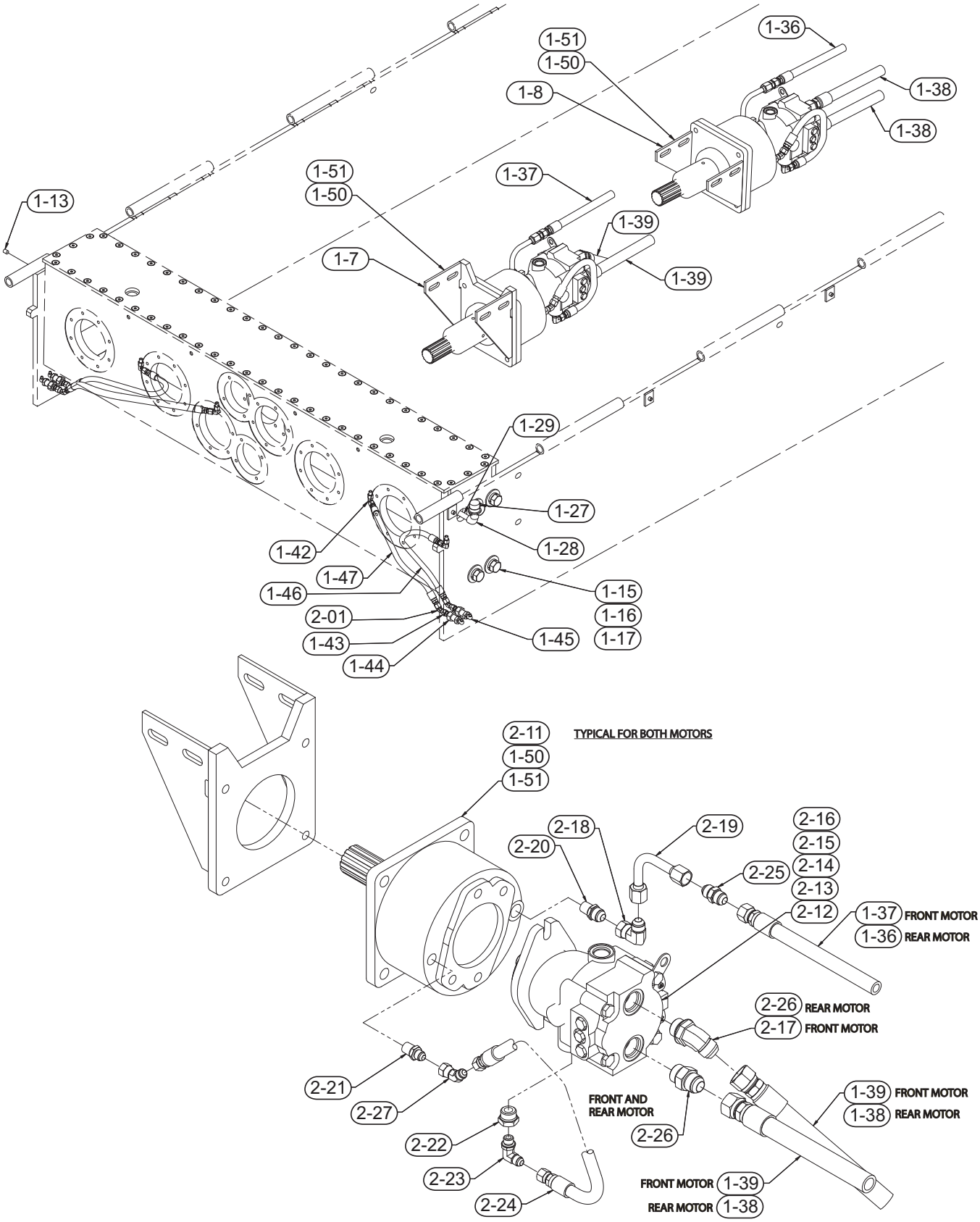

Return to Table of Contents Page

TEREX CEDARAPIDS

Remix Auger Drive Components

Parts List No. 05231UCB

REF	PART NUMBER	REV	DESCRIPTION	QTY
-	0970625219		ASSEMBLY DRAWING*662RM AUGER DRIVE	REF
104	0970630104	G	GEARBOX*ASSEMBLY REMIX *(See Form 24310-24311)*	1
105	0970625045	A	DRIVESHAFT*MOTOR AUGER DR	1
106	0970625046	A	DRIVESHAFT*MOTOR AUGER DR	1
107	0970625214	A	BRACKET*MOTOR MOUNT FRONT	1
108	0970625215	A	BRACKET*MOTOR MOUNT REAR	1
113	4525002002		PLUG*1/4" COUNTESUNK	1
115	07383119		CAPSCREW*3/4" NC X 2-1/4"	8
116	07014023		WASHER*3/4"	8
117	07014009		WASHER*3/4" LOCK	8
119	07389047		CAPSCREW*SCH1/2NCX1-3/4	8
120	07012027		HEX NUT*1/2" NC	8
121	07014020		WASHER*1/2"	8
122	07014005		WASHER*1/2" LOCK	8
125	07130078		SE7 SC5 E*3/8" 1C X 3/4"	6
127	07052021		FITTING*GREASE	1
128	07085002		ELBOW*90D-1/4"	1
129	405010025001	A	PIPE*1/4"DIAX2-1/2"TBE	1
136	0765207535	A	HOSE ASSY*1/2" ID X 75"	1
137	0765210635	A	HOSE ASSY*1/2" ID X 106"	1
138	0768306435	-	HOSE ASSY*3/4" ID X 64"	2
139	0768310035	-	HOSE ASSY*3/4" ID X 100"	2
141	07053001		NIPPLE*GREASE EXTENSION	4
142	07430016		CONNECTOR*1/8"NPT-1/4"JIC	4
143	07430001		CONNECTOR*1/8"NPT-1/4"JIC	4
144	4572000111	A	COUPLING*1/8" X 1/8" X 1-	4
145	07052003		FITTING*HYD ALEMITE	4
146	0765000933	A	HOSE ASSY*1/4" I.D. X 9"	2
147	0765002033	A	HOSE ASSY*1/4" ID X 20"	2
150	07383102		CAPSCREW*5/8" NC X 2"	8
151	07014007		WASHER*5/8" LOCK	8
201	07430425		ELBOW*1/4"JIC SWIVEL	4
211	4545500185	A	GEARBOX*1-STAGE PLANETARY	2
212	4508000636	C	MOTOR*2.65 CID W/FLUSHING	2
213	07465001		WASHER*1/2" HRD FLT	4
214	07383073		CAPSCREW*1/2NC X 2-1/4"	4
215	07014005		WASHER*1/2" LOCK	4
216	0970415422	B	GASKET*SAE ‘B’ 2-BOLT	2
217	07430318		ELBOW*#12SAE #12JIC	2
218	07430405		ELBOW*1/2" SWIVEL	2
219	0970665019		TUBE ASSY*CASE DRAIN-AUGE	2
220	07430006		CONNECTOR*3/8"NPT-1/2"JIC	2
221	07430005		CONNECTOR*3/8"NPT-3/8"JIC	2
222	4572077556	-	REDUCER*	2
223	07430275		ELBOW*#6SAEM X #6JICM 90D	2
224	0765102233	A	HOSE ASSY*3/8" ID X 21"	2
225	07430385		UNION*1/2"	2
226	07430263		CONNECTOR*1-1/16"SE 3/4"J	3
227	07430426		ELBOW*#6 X 45 SWIVEL	2

Return to Table of Contents Page

TEREX
CEDARAPIDS

Remix Auger Drive Gearbox

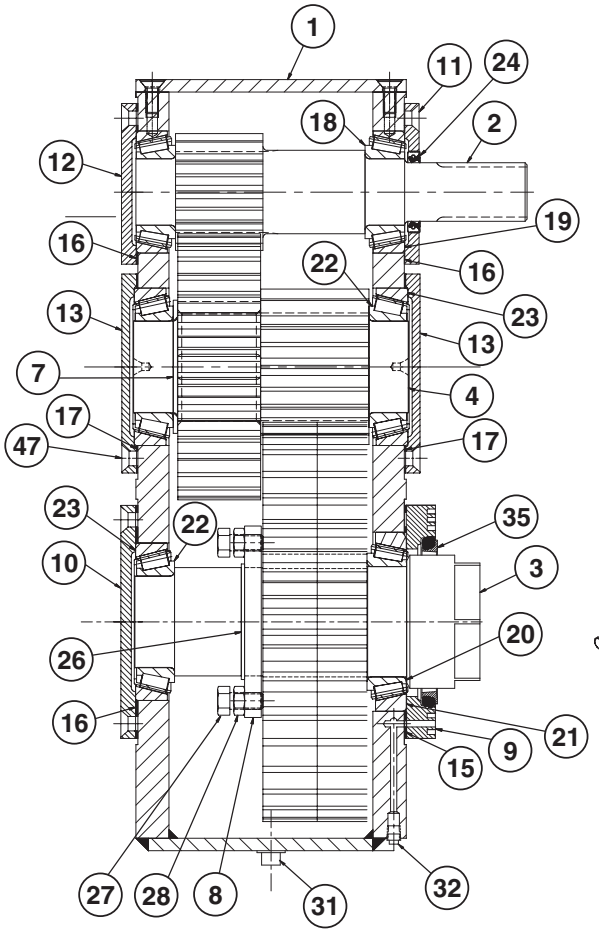

SECTION A - A

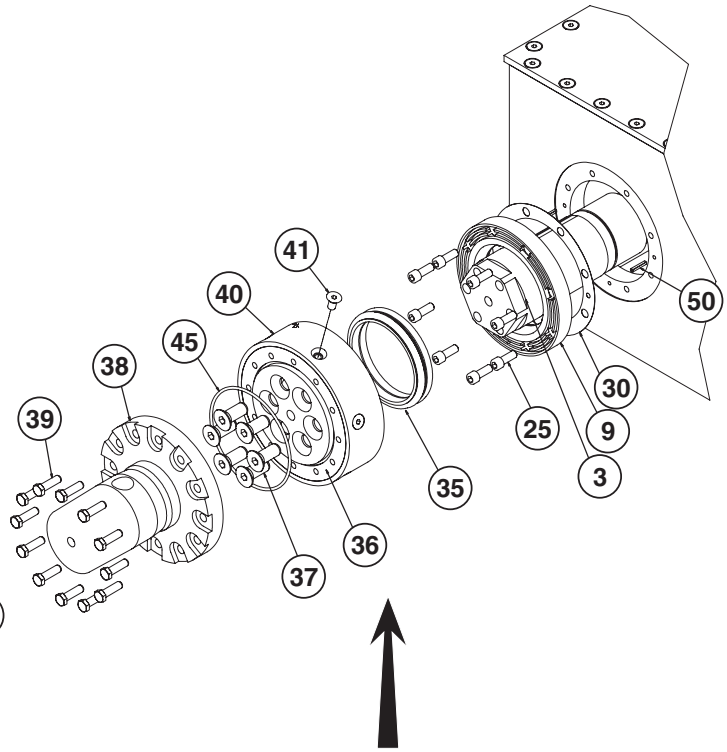

Exploded View Shown Above

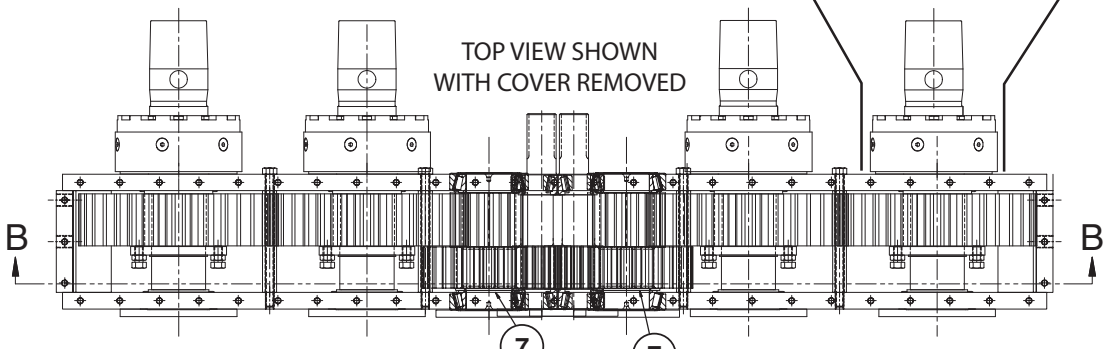

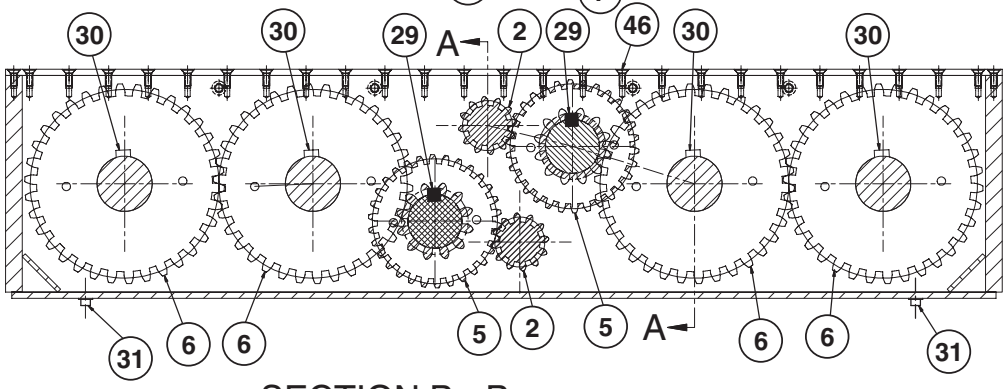

SECTION B - B

Return to Table of Contents Page

TEREX
CEDARAPIDS

Remix Auger Drive Gearbox

Part No. 0970630104

Ref #	Part Number	REV	Part Name	Description	Qty
1	0970630052	D	GEARCASE	REMIX GEARBOX	1
2	0970630055	A	SHAFT	INPUT	2
3	0970630092	D	SHAFT	OUTPUT	4
4	0970630057	B	SHAFT	INTERMEDIATE	2
5	0970630058	B	GEAR	30T INTERMEDIATE	2
6	0970630059	C	GEAR	34T FINAL OUTPUT	4
7	0970630060		SPACER	INTERMEDIATE SHAFT	2
8	0970630061		RETAINER	OUTPUT SHAFTGEAR	4
9	0970630094	A	PLATE	INNER SEAL	4
10	0970630064		BRG CAP	OUTPUT SHAFT	4
11	0970630065		BRG CAP	INPUT SHFT W/SEAL	2
12	0970630066		BRG CAP	INPUT SHAFT	2
13	0970630067		BRG CAP	INTERMEDIAT SHAFT	4
14	0970630068	A	SHIM	OUTPUT SHAFT NO SEAL	30
15	0970630069	B	SHIM	OUTPUT SHAFT W/SEAL	30
16	0970630070	A	SHIM	INPUT SHAFT	14
17	0970630071	A	SHIM	INTERMEDIATE SHAFT	18
18	07139012		BRG CONE	2.000" BORE	4
19	07139001		BRG CUP	3.875" OD	4
20	4513000144		CONE	BEARING	4
21	4513000220	A	BRG CUP		4
22	4513000145			CONE-BRG	8
23	4513000232		CUP	BRG	8
24	45200307	A	SEAL		2
25	07025013		CAPSCREW	SCH 3/8"NC X 1	32
26	07253069			RETAINING RING	4
27	07383070		CAPSCREW	1/2" NC X 1-1/2"	32
28	07017027		HEX NUT	1/2" NC JAM	32
29	0970630074		KEY	INTERMEDIAT SHFT GEAR	2
30	0970630075	A	KEY	OUTPUT SHAFT GEAR	8
31	07024004		PIPE PLUG	1/2"	2
32	07024001		PIPE PLUG	1/8"	4
35	45203022	-	SEAL	DUO-CONE	4
36	0970630095	B	PLATE	OUTER SEAL	4
37	07389054		CAPSCREW	SCH5/8NCX1-1/2	24
38	0970630093	B	SHAFT	AUGER DRIVE SHAFT	4
39	07389039		CAPSCREW	FLAT HEAD	48
40	0970630096	-	COVER	DRIVE ASSEMBLY	4
41	07389023		CAPSCREW	SCH 3/8NC X3/4	24
45	4525950889	-	O RING	5.234"ID .139"W.	4
			NOTE: Parts listed above are contained within Kit No. 0970925009		
46	07389024		CAPSCREW	SCH 3/8"NC X 1"	56
47	07389025		CAPSCREW	SCH3/8NCX1-1/4	72
48	0970630106		WELDMENT	DIP STICK *(Not Shown)*	1
49	07024013		PIPE PLUG	3/4"	1
50	07238083		ROLL PIN	3/16" X3/4"	8

TEREX
CEDARAPIDS

Remixing Auger Covers

Parts List No. 05231UBC

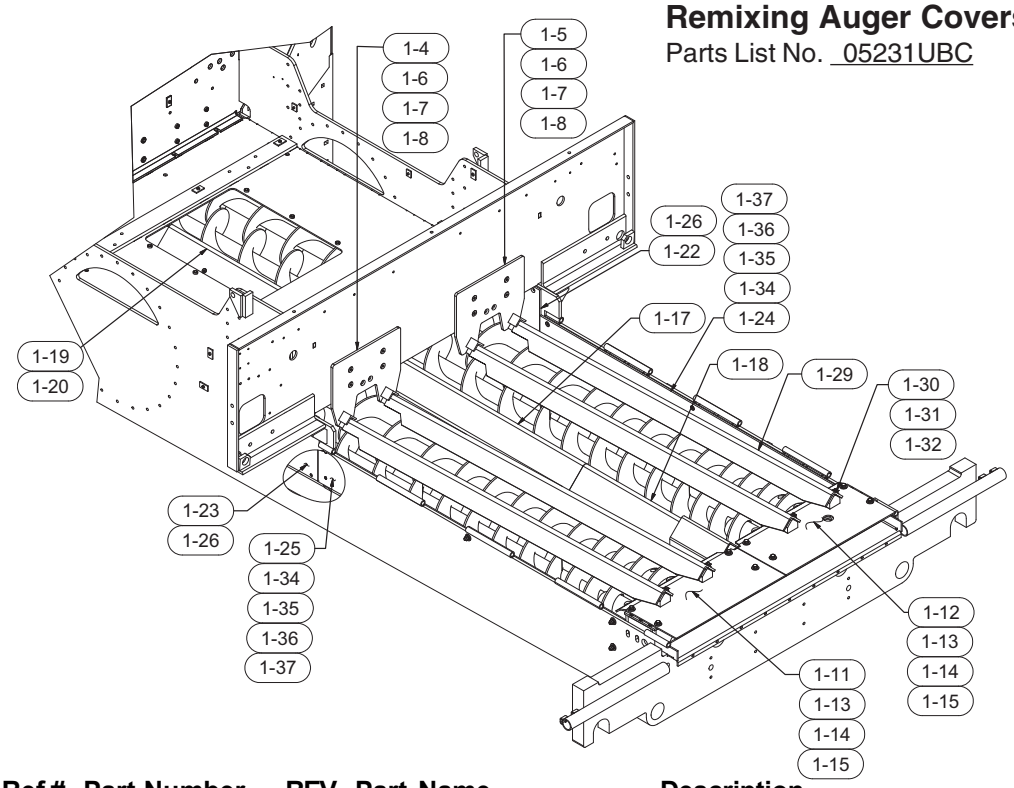

Ref #	Part Number	REV	Part Name	Description	Qty
-	0970625122	B	ASSEMBLY DRAWING	REMIX AUGER COVER	REF
-	0970925011		KIT	AUGER COVER SUPPORTS	1
104	0970625026		PLATE RH	SUPPORT COVER	1
105	0970625027		PLATE LH	SUPPORT COVER	1
106	07389056		CAPSCREW	SCH 5/8"NC X 2"	8
107	07014007		WASHER	5/8" LOCK	8
108	07012029		HEX NUT	5/8" NC	8
-	0970925015		KIT	GEARBOX COVER KIT	1
111	0970625175		WELDMENT	GEARBOX COVER RH	1
112	0970625176		WELDMENT	GEARBOX COVER LH	1
113	07383068		CAPSCREW	1/2" NC X 1"	8
114	07014005		WASHER	1/2" LOCK	8
115	07014020		WASHER	1/2"	8
117	0970625104	A	COVER	CENTER	1
118	0970625223		COVER	FRONT COVER	1
119	0970625105	A	COVER	REAR COVER	1
120	07389044		CAPSCREW	SCH 1/2"NC X 1"	4
-	0970925008		KIT	SIDE LINERS	1
122	0970625101		PLATE	SIDE LINER LH	1
123	0970625102		PLATE	SIDE LINER RH	1
124	0970625097		PLATE	SIDE LINER LH	1
125	0970625098		PLATE	SIDE LINER RH	1
126	07389044		CAPSCREW	SCH 1/2"NC X 1"	8
129	0970625174	A	PLATE	REMIX ANGLE	4
130	07383068		CAPSCREW	1/2" NC X 1"	4
131	07014005		WASHER	1/2" LOCK	4
132	07014020		WASHER	1/2"	4
134	07389048		CAPSCREW	SCH 1/2"NC X 2"	10
135	07014020		WASHER	1/2"	10
136	07014005		WASHER	1/2" LOCK	10
137	07012027		HEX NUT	1/2" NC	10

TEREX
CEDARAPIDS

Remixing Augers Assembly

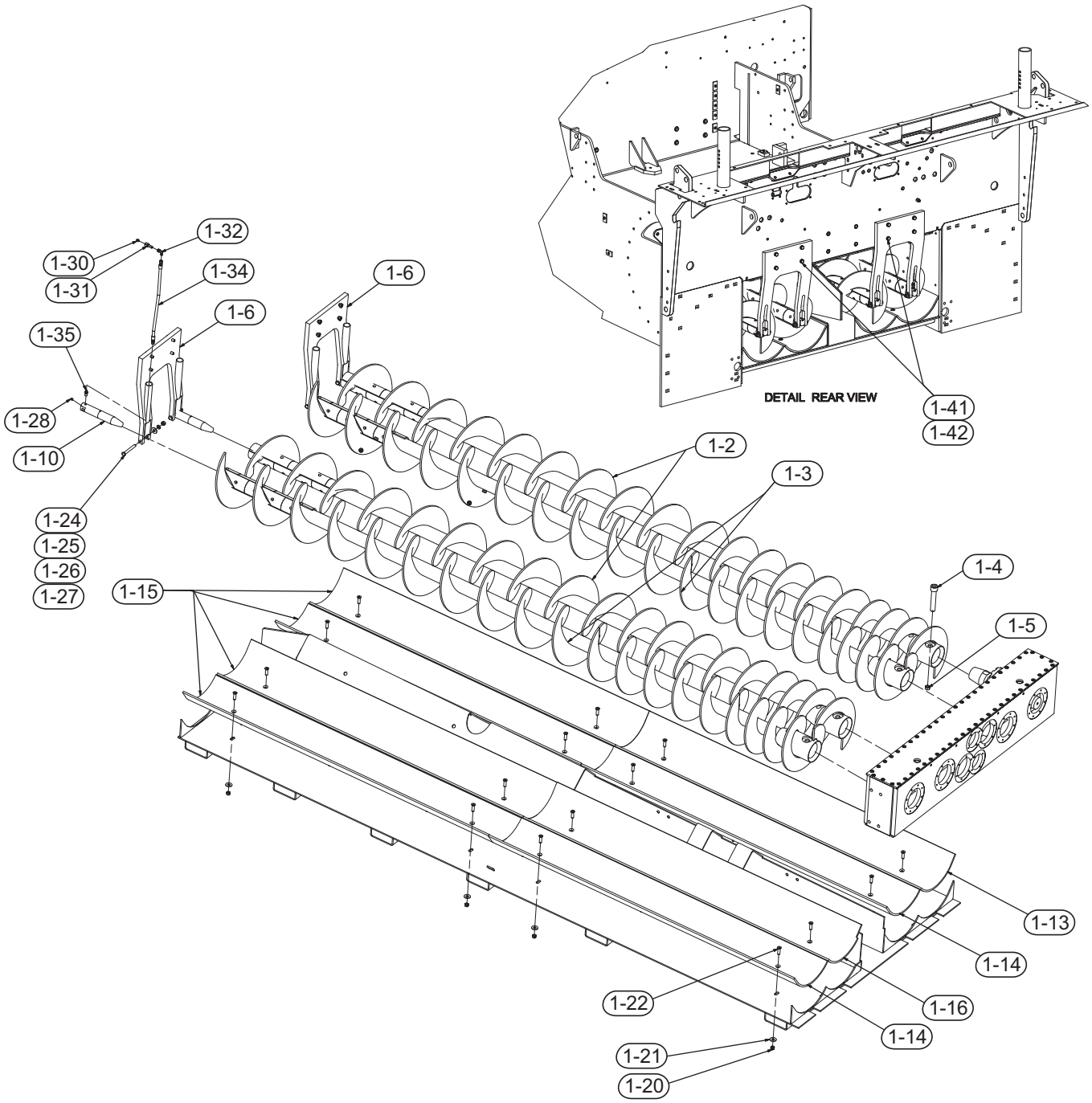

TEREX
CEDARAPIDS

Remixing Augers Assembly

Parts List No. 05231UAF

Ref#	Part Number	REV	Description	Qty
-	0970625208		ASSEMBLY DRAWING*DELIVERY AUGERS 662	REF
102	0970625207	B	AUGER*RH 662RM AUGER W/BU *(See Form 25038)*	2
103	0970625206	B	AUGER*LH 662RM AUGER W/BU *(See Form 25039)*	2
104	07025181	-	CAPSCREW*	4
105	4589010232	-	HEX NUT*	4
106	0970625172	A	SUPPORT*AUGER PIN	2
110	0970625031	C	PIN*AUGER PIN	4
112	0970925013		KIT*662 TROUGH LINER	1
113	0970625093		TROUGH*FRONT L/H.	1
114	0970625094		TROUGH*FRONT R.H.	2
115	0970625095		PLATE*AUGER TROUGH	4
116	0970625096		TROUGH*FRONT L.H.	1
120	4589010228	B	LOCKNUT*1/2"NC	16
121	07014020		WASHER*1/2"	16
122	07389047		CAPSCREW*SCH1/2NCX1-3/4	16
124	07383080		CAPSCREW*1/2" NC X 4"	4
125	07014005		WASHER*1/2" LOCK	4
126	07014020		WASHER*1/2"	4
127	07012027		HEX NUT*1/2" NC	4
128	4525002001	-	PLUG*1/8" PIPE(PITMAN END	4
130	07051002		FITTING*GREASE 1/8" X 45	4
131	07430333		CONNECTOR*1/8"NPT-1/4"JIC	4
132	07430407		ELBOW*1/4" SWIVEL	8
133	07430364		UNION*1/4"JIC BULKHD	4
134	0970625173		HOSE ASSEMBLY*	4
135	07430002		CONNECTOR*#4MNPT - #4MJIC	4
136	0970645206		TUBE ASSY*REAR INNER GREA	2
137	0970645207		TUBE ASSY*REAR OUTER GREA	2
138	4618500113	A	HOSE CLAMP*1/4" HOSE	4
139	07389045		CAPSCREW*SCH1/2NCX1-1/4	12
141	07383071		CAPSCREW*1/2"NC X 1-3/4"	8
142	07014005		WASHER*1/2" LOCK	8
144	07383039		CAPSCREW*3/8"NC X 1-1/4	2
145	07014003		WASHER*3/8" LOCK	2
146	07012025		HEX NUT*3/8" NC	2

TEREX
CEDARAPIDS

RH Auger Assembly

Part No. 0970625207

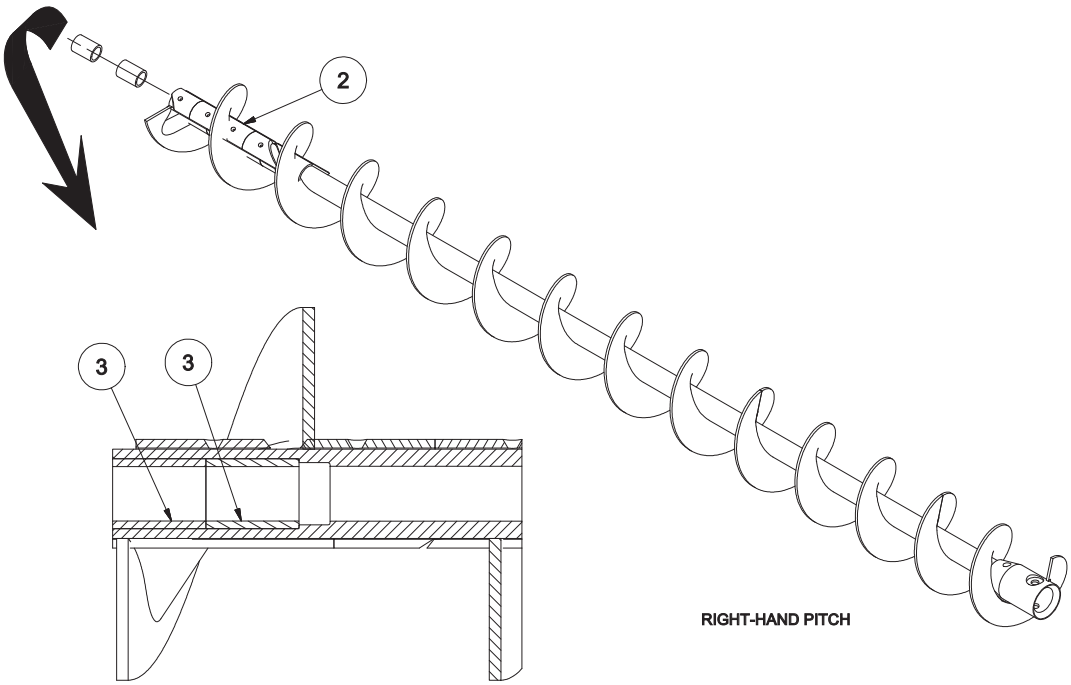

Ref #	Part Number	REV	Part Name	Description	Qty
2	04431487		LINER	SHAFT	15
3	07254065		BUSHING	1.75" ID	2

TEREX
CEDARAPIDS

LH Auger Assembly

Part No. 0970625206

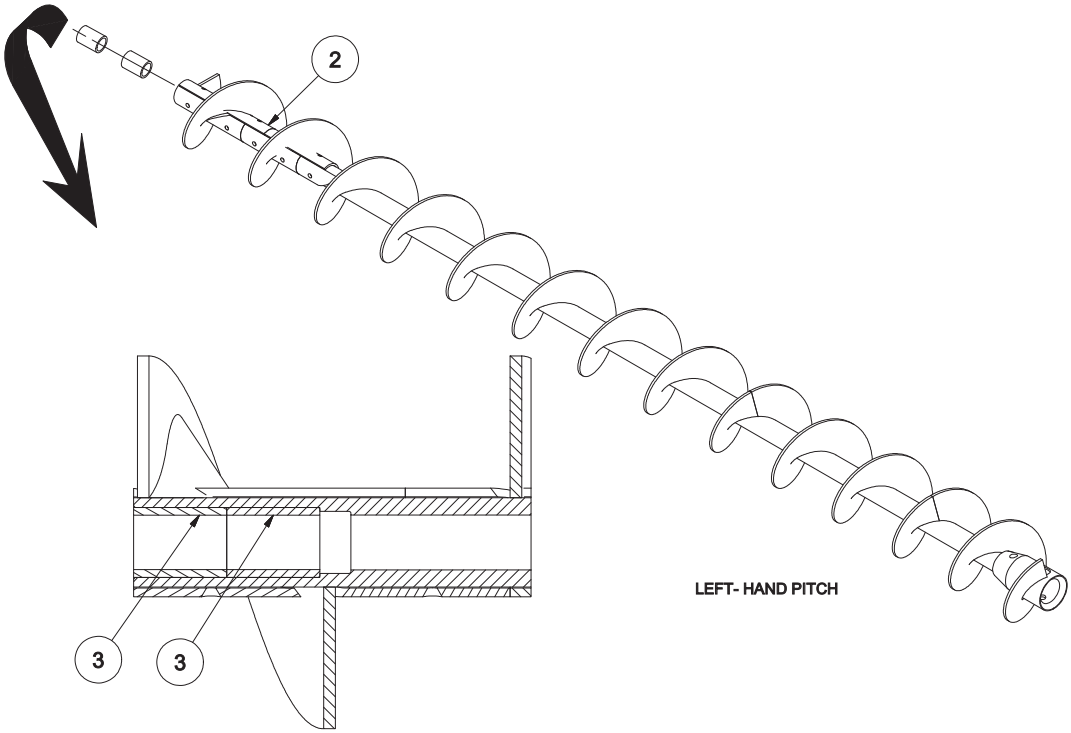

Ref #	Part Number	REV	Part Name	Description	Qty
2	04431486		LINER	SHAFT	15
3	07254065		BUSHING	1.75" ID	2

TEREX
CEDARAPIDS

Additional Parts Without Fume Control

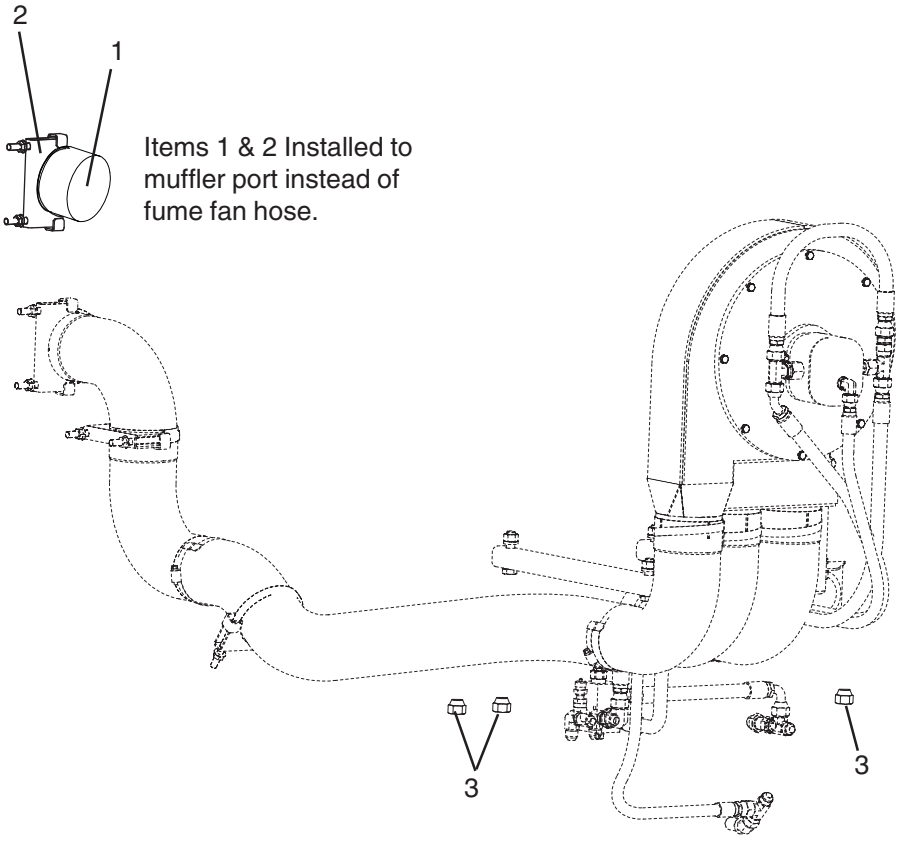

Items 1 & 2 Installed to muffler port instead of fume fan hose.

Item 3 (caps) installed onto fittings instead of fume fan hydraulics.

Ref #	Part Number	REV	Part Name	Description	Qty
1	4571000322	A	CAP		1
2	4571000213	A	U - CLAMP	FLAT BAND 4"	1
3	07430229		CAP	1/2"	3

Cedarapids
A Terex Company

Track Console Cover

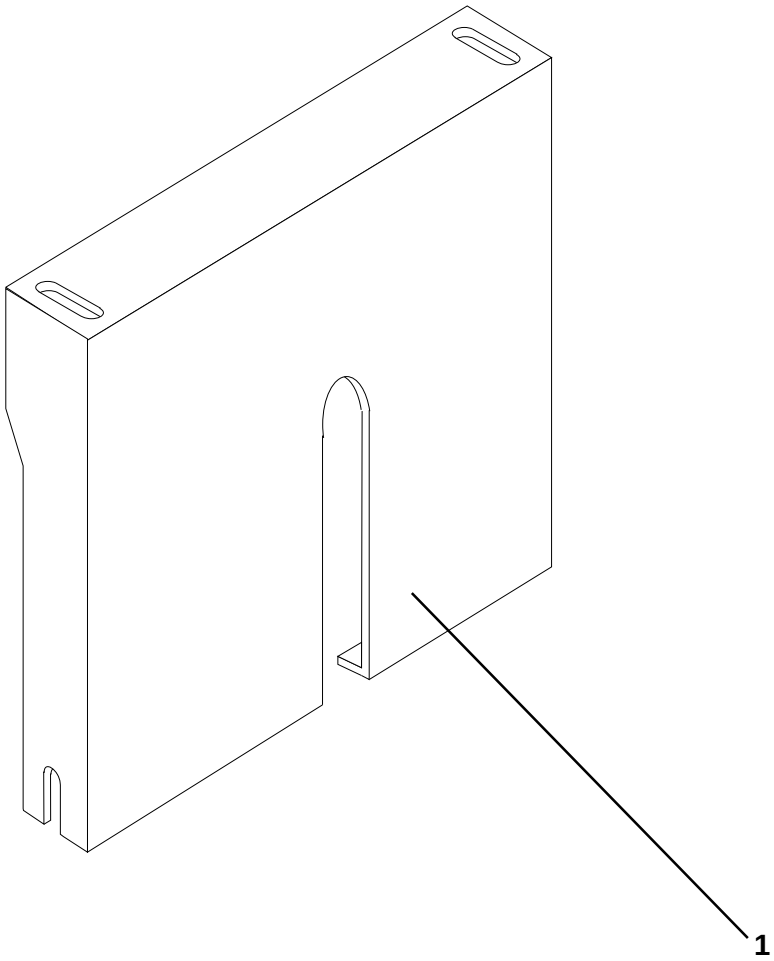

Ref. No.	Part Number	Description	Quantity
1	9704-505-46	Cover, Track Console	1
The following hardware is supplied with Console Cover, not shown on the illustration:			
2	7455-012	Screw, Shoulder 3.8" x 5/8"	2
3	7014-002	Washer, 5/16" Lock	2
4	7012-024	Hex Nut, 5/16" NC	2
5	7383-074	Capscrew, 1/2" x 2-1/2"	2
6	7014-005	Washer, 1/2" Lock	2
7	7012-027	Hex Nut, 1/2" NC	4

NOTE: Refer to Control Console in Section 8 for additional information.

TEREX
CEDARAPIDS

Console - Mechanical Parts

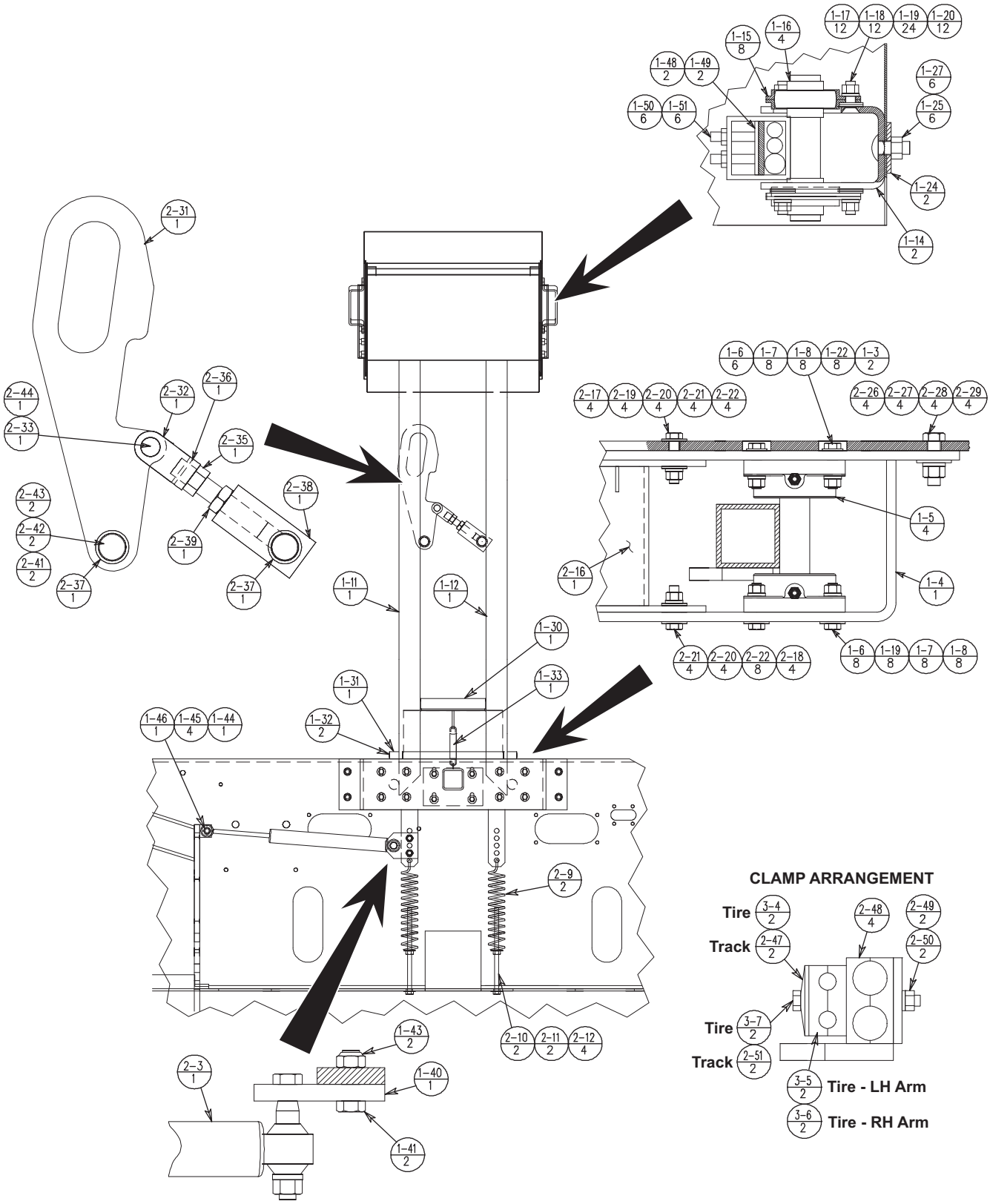

TEREX
CEDARAPIDS

Console - Mechanical Parts

Parts List No. 05234MAB

Ref #	Part Number	REV	Part Name	Description	Qty
-	0970450630	A	ASSEMBLY DRAWING	CONSOLE MECHANICAL PARTS	REF
1-3	07383041		CAPSCREW	3/8"NC X 1-3/4"	6
1-4	0970450618		BASE	CONSOLE BASE	1
1-5	F0103FGA	C	FLANGE BEARING	1-3/16" *(See Form 1001)*	4
1-6	07383040		CAPSCREW	3/8"NC X 1-1/2"	10
1-7	07014003		WASHER	3/8" LOCK	16
1-8	07012025		HEX NUT	3/8" NC	16
1-10	0970950002	-	KIT	CONSOLE ARM SUPPORT	1
1-11	0970450368	-	SUPPORT	RH	1
1-12	0970450373	-	SUPPORT	LH	1
1-14	0970450364	A	BRACKET	SUPPORT CONSOLE	2
1-15	4512900104	-	FLANGETTE	3 BOLT 1-3/16"	8
1-16	07041007		BALL BRG	1-3/16"	4
1-17	07389025		CAPSCREW	SCH3/8NCX1-1/4	12
1-18	07014003		WASHER	3/8" LOCK	12
1-19	07014018		WASHER	3/8"	32
1-20	07012025		HEX NUT	3/8" NC	12
1-22	07097009		WASHER	3/8"SAE FLAT	8
1-24	0970450379	A	FLAT		2
1-25	07072101		CARR BOLT	1/2" X 1-1/4"	6
1-27	4589010228	B	LOCKNUT	1/2"NC	6
1-30	0970450586	A	LOCK	CONSOLE LOCK	1
1-31	0970450490	C	ROD	HINGE	1
1-32	07238087		ROLL PIN	3/16" X 1"	2
1-33	05036XQ07	-	COIL SPRNG		1
1-35	0970495262	B	PLATE	GUIDE	1
1-36	0970495290	A	FLAT	NOISE SUPPRESSION	1
1-40	0970450302	A	FLAT	SWING CONSOLE DAMPER	1
1-41	07383070		CAPSCREW	1/2"NC X 1-1/2	2
1-43	4589010228	B	LOCKNUT	1/2"NC	2
1-44	07383061		CAPSCREW	7/16" NC X 3"	1
1-45	07014019		WASHER	7/16"	4
1-46	4589010231		CROWNLOCK	7/16" NC LOCK	1
1-48	0970450394	A	FLAT		2
1-49	0970450395	A	RUBBER		2
1-50	07131083		SET SCREW	3/8"NC X 1-3/4"	6
1-51	07017025		HEX NUT	3/8" NC JAM	6
2-3	4509001045	A	DAMPER	STEERING	1
2-9	0970450305	B	SPRING	TENSION	2
2-10	07285033		ADJ BOLT	1/2"NC X 10"	2
2-11	07014020		WASHER	1/2"	2
2-12	07012027		HEX NUT	1/2" NC	4
2-16	0970450617		STOP	CONSOLE STOP	1
2-17	07383041		CAPSCREW	3/8"NC X 1-3/4"	4
2-18	07383039		CAPSCREW	3/8"NC X 1-1/4	2
2-19	07097009		WASHER	3/8"SAE FLAT	4
2-20	07014003		WASHER	3/8" LOCK	8

TEREX
CEDARAPIDS

Console - Mechanical Parts

Parts List No. 05234MAB

Ref #	Part Number	REV	Part Name	Description	Qty
2-21	07012025		HEX NUT	3/8" NC	8
2-22	07014018		WASHER	3/8"	12
2-23	07383040		CAPSCREW	3/8"NC X 1-1/2"	2
2-26	07383070		CAPSCREW	1/2"NC X 1-1/2	4
2-27	07014005		WASHER	1/2" LOCK	4
2-28	07012027		HEX NUT	1/2" NC	4
2-29	07014020		WASHER	1/2"	4
2-31	0970450507	E	HANDLE	CONSOLE LOCK	1
2-32	0970450508	B	YOKE	CONSOLE CLAMP	1
2-33	07198010		YOKE PIN	3/4" DIA.	1
2-35	0970450501	A	BOLT		1
2-36	07253026		RETAINING RING		1
2-37	4050500075		PIPE	1" STD X 3/4"	2
2-38	0970450509	B	BLOCK	CONSOLE LOCK	1
2-39	07017052		HEX NUT	3/4" NF JAM	1
2-41	07014020		WASHER	1/2"	2
2-42	07383068		CAPSCREW	1/2" NC X 1"	2
2-43	07014005		WASHER	1/2" LOCK	2
2-44	07011019		COTTER PIN	5/32" X 1"	1
2-47	4508052927	-	PLATE	COVER FOR CLAMP	2
2-48	4508052935	-	CLAMP HALF	1"	4
2-49	07014002		WASHER	5/16" LOCK	2
2-50	07012024		HEX NUT	5/16" NC	2
2-51	07383027		CAPSCREW	5/16"NC X 2-1/4	2
3-4	4508052926	-	PLATE	COVER FOR CLAMP	2
3-5	4508052923	-	CLAMP HALF	FOR 1/2" TUBE	2
3-6	4508052924	-	CLAMP HALF	FOR 5/8" TUBE	2
3-7	07383032		CAPSCREW	5/16"NC X 3-1/2	2

TEREX
CEDARAPIDS

Anti-Friction Bearing
Flange Type

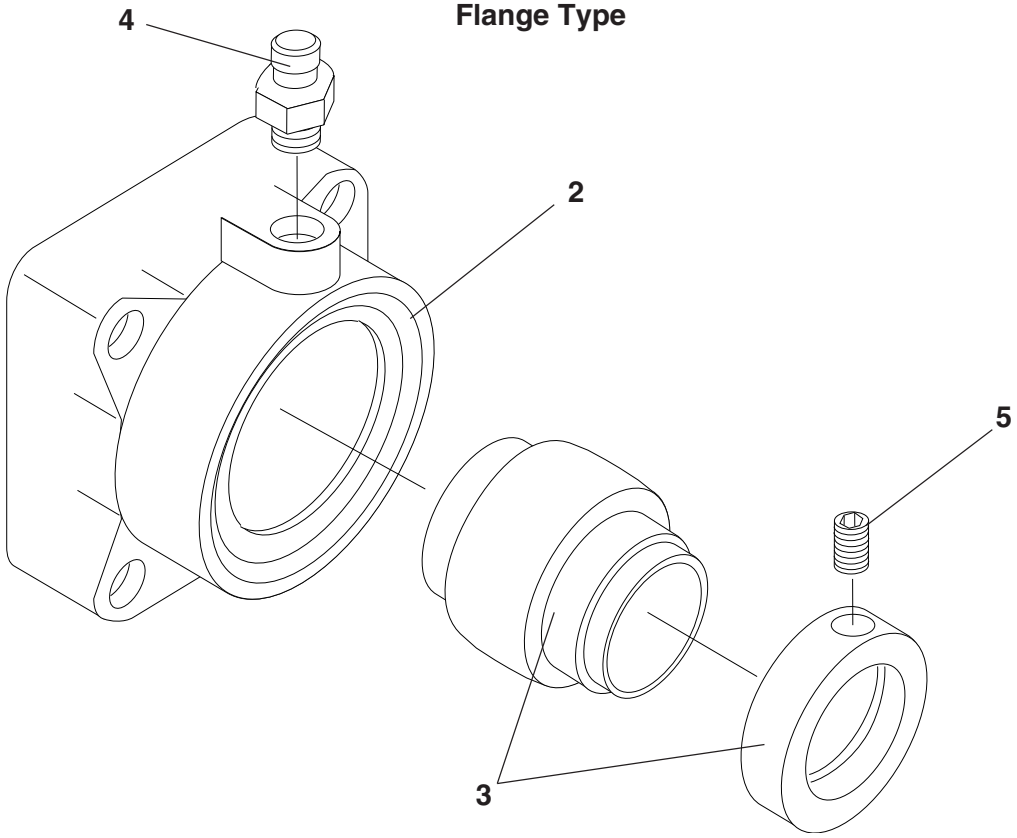

Ref. No.	Part Number	Description	Quantity
	F0100FGA	Flange Bearing, 1" Bore - Complete	
2	F0100FG	Housing, Bearing	1
3	7041-004	Bearing & Collar	1
4	Variable	Grease Fitting	1
5	7131-046	Setscrew, 1/4" x 1/4" Socket Head	1
	F0103FGA	Flange Bearing, 1-3/16" Bore - Complete	
2	F0103FG	Housing, Bearing	1
3	7041-007	Bearing & Collar	1
4	Variable	Grease Fitting	1
5	7131-046	Setscrew, 1/4" x 1/4" Socket Head	1
	F0106FGA	Flange Bearing, 1-3/8" Bore - Complete	
2	F0107FG	Housing, Bearing	1
3	7041-010	Bearing & Collar	1
4	Variable	Grease Fitting	1
5	7131-074	Setscrew, 3/8" x 3/8" Socket Head	1
	F0107FGA	Flange Bearing, 1-7/16" Bore - Complete	
2	F0107FG	Housing, Bearing	1
3	7041-011	Bearing & Collar	1
4	Variable	Grease Fitting	1
5	7131-074	Setscrew, 3/8" x 3/8" Socket Head	1

TEREX
CEDARAPIDS

Anti-Friction Bearing
Flange Type

Ref. No.	Part Number	Description	Quantity
	F0110FGA	Flange Bearing, 1-5/8" Bore - Complete	
2	F0111FG	Housing, Bearing	1
3	7041-014	Bearing & Collar	1
4	Variable	Grease Fitting	1
5	7131-074	Setscrew, 3/8" x 3/8" Socket Head	1
	F0111FGA	Flange Bearing, 1-11/16" Bore - Complete	
2	F0111FG	Housing, Bearing	1
3	7041-015	Bearing & Collar	1
4	Variable	Grease Fitting	1
5	7131-074	Setscrew, 3/8" x 3/8" Socket Head	1
	F0112FGA	Flange Bearing, 1-3/4" Bore - Complete	
2	F0111FG	Housing, Bearing	1
3	7041-016	Bearing & Collar	1
4	Variable	Grease Fitting	1
5	7131-074	Setscrew, 3/8" x 3/8" Socket Head	1
	F0115FGA	Flange Bearing, 1-15/16" Bore - Complete	
2	F0115FG	Housing, Bearing	1
3	7041-019	Bearing & Collar	1
4	Variable	Grease Fitting	1
5	7131-074	Setscrew, 3/8" x 3/8" Socket Head	1
	F0203FGA	Flange Bearing, 2-3/16" Bore - Complete	
2	F0203FG	Housing, Bearing	1
3	7041-023	Bearing & Collar	1
4	Variable	Grease Fitting	1
5	7131-087	Setscrew, 7/16" x 7/16" Socket Head	1
	F0207FGA	Flange Bearing, 2-7/16" Bore - Complete	
2	F0207FG	Housing, Bearing	1
3	7041-024	Bearing & Collar	1
4	Variable	Grease Fitting	1
5	7131-087	Setscrew, 7/16" x 7/16" Socket Head	1
	F0215FGA	Flange Bearing, 2-15/16" Bore - Complete	
2	F0215FG	Housing, Bearing	1
3	7041-025	Bearing & Collar	1
4	Variable	Grease Fitting	1
5	7131-100	Setscrew, 1/2" x 1/2" Socket Head	1

TEREX
CEDARAPIDS

Emblems

Parts List No. 05234KDQ

REF	PART NUMBER	REV	DESCRIPTION	QTY
-	0449403109		ASSEMBLY DRAWING*DECALS TRACTOR	REF
103	04495019	-	DIAGRAM*HYD SCHEMATIC 662	1
105	4601060006	B	TAPE*1" WHITE	4'
107	0449350001	A	DECAL*LIFT POINT ISO	4
108	0449350003	0	DECAL*TIE DOWN POINT-ISO	4
114	0449410311	-	DECAL*COOLANT FILLING	1
115	04418628	F	EMBLEM*MOVING	1
116	0449040004	0	DECAL*DANGER AUGER ENTANG	1
117	0449150003	0	DECAL*WARNING ASPHALT BRN	1
118	0449150007	0	DECAL*WARNING FALL HAZARD	1
119	0449040002	0	DECAL*DANGER ELECT HAZARD	1
120	0449150005	0	DECA;*WARNING HEARING HAZ	1
121	0449150004	0	DECAL*WARNING HOOD CRUSH	2
122	0449350005	0	DECAL*DO NOT STEP	1
124	0449410491	0	EMBLEM*PAVER HOOD STRIPE	1
125	0449410492	0	EMBLEM*PAVER HOOD STRIPE	1
126	0449410732	0	DECAL*CR662 LIFT POINTS	1
127	04418609	F	EMBLEM*TIE DOWNS	1
128	0449150016	0	DECAL*WARNING LOCKOUT ENT	1
131	04418197	A	EMBLEM*SMV	1
132	07435135	0	MACH SCREW*1/4"NC X 3/4"	2
133	07014001	0	WASHER*1/4" LOCK	2
134	07012023	0	HEX NUT*1/4" NC	2
140	0449040001	0	DECAL*DANGER BATTERY EXPL	1
141	04418803	D	EMBLEM*OIL RESERVOIR	1
142	0449150010	0	DECAL*WARNING FLUID INJEC	1
143	0441813511	G	EMBLEM*DIESEL	1
144	04418836	D	EMBLEM*RESERVOIR LEVEL	1
145	0449410301	-	DECAL*TOWING INSTRUCTIONS	1
146	0449150011	0	DECAL*WARNING EMERG BRAKE	1
202	04418866	J	EMBLEM*PATENT	1
203	04418925	E	EMBLEM*PAVER LUBE PLATE	1
204	04493035	0	DECAL*SERIAL PLATE	1
205	07073013	0	SCREW*#6 X 1/4" DRIVE	4
208	04418950	B	EMBLEM*ENGINE COOLANT	1
209	04418720	C	EMBLEM*ENGINE OIL DRAIN	1
224	0449040004	0	DECAL*DANGER AUGER ENTANG	2
225	0449150003	0	DECAL*WARNING ASPHALT BRN	2
226	0449150006	0	DECAL*WARNING HOPPER WING	2
227	4601060008	-	REFLECTOR*AMBER 4-1/4" X	2
228	0449410715	0	DECAL*TEREX PAVER LH HOPP	1
229	0449410716	0	DECAL*TEREX PAVER RH HOPP	1
235	0449410731	0	DECAL*CR662RM RDMX MOD NO	2
236	0449410482	-	EMBLEM*ROADMIX	2
237	0449040003	0	DECAL*DANGER ACCUM EXPL	2
239	04418943	B	EMBLEM*REMIX ANTI-SEG SYS	2

NOTE: NO ILLUSTRATION AVAILABLE

TEREX
CEDARAPIDS

Hood w/Charge Air Cooler

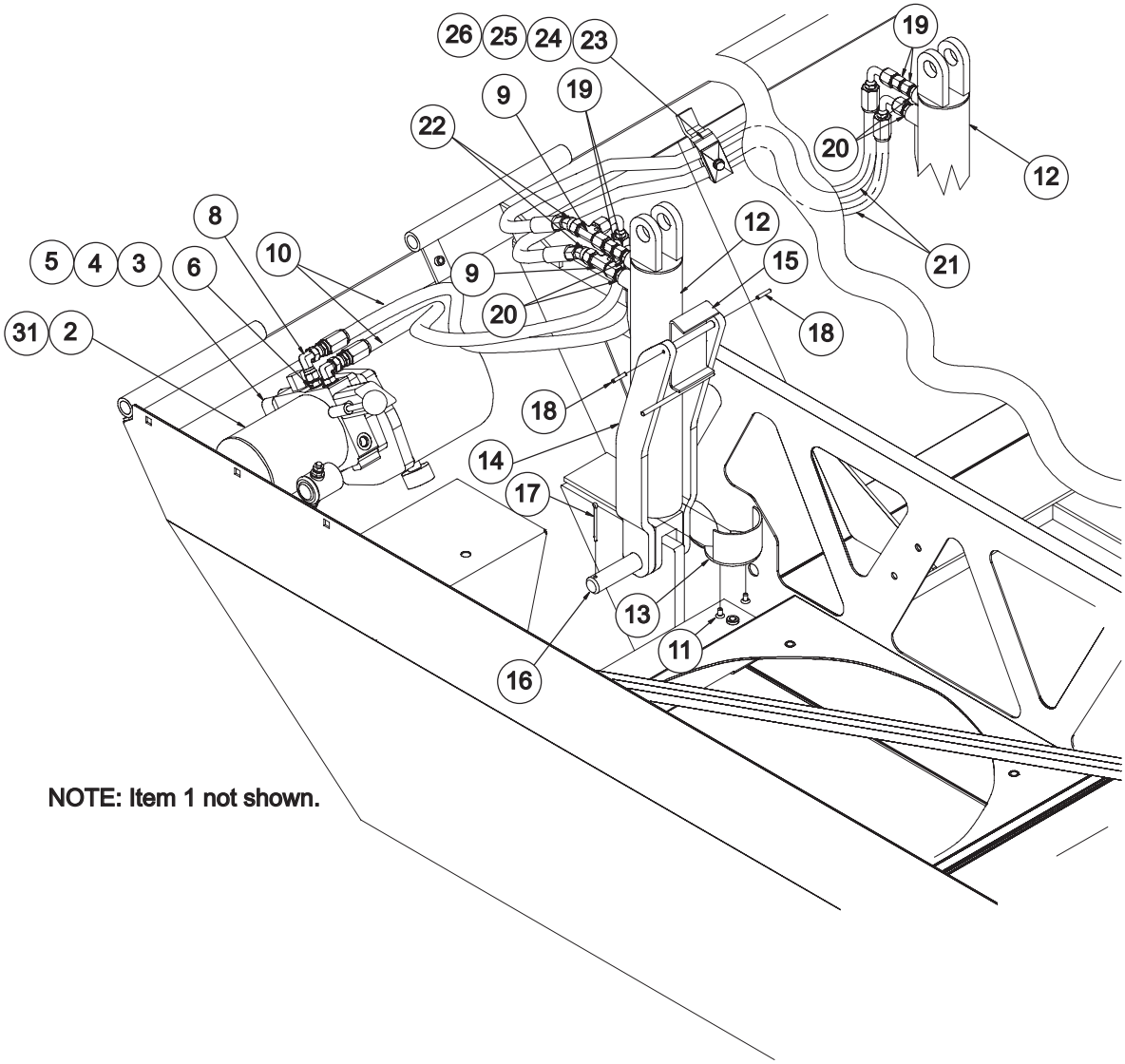

NOTE: Item 1 not shown.

TEREX
CEDARAPIDS

Hood w/Charge Air Cooler

SUPERCHARGE FILTER - HARDWARE MTG.

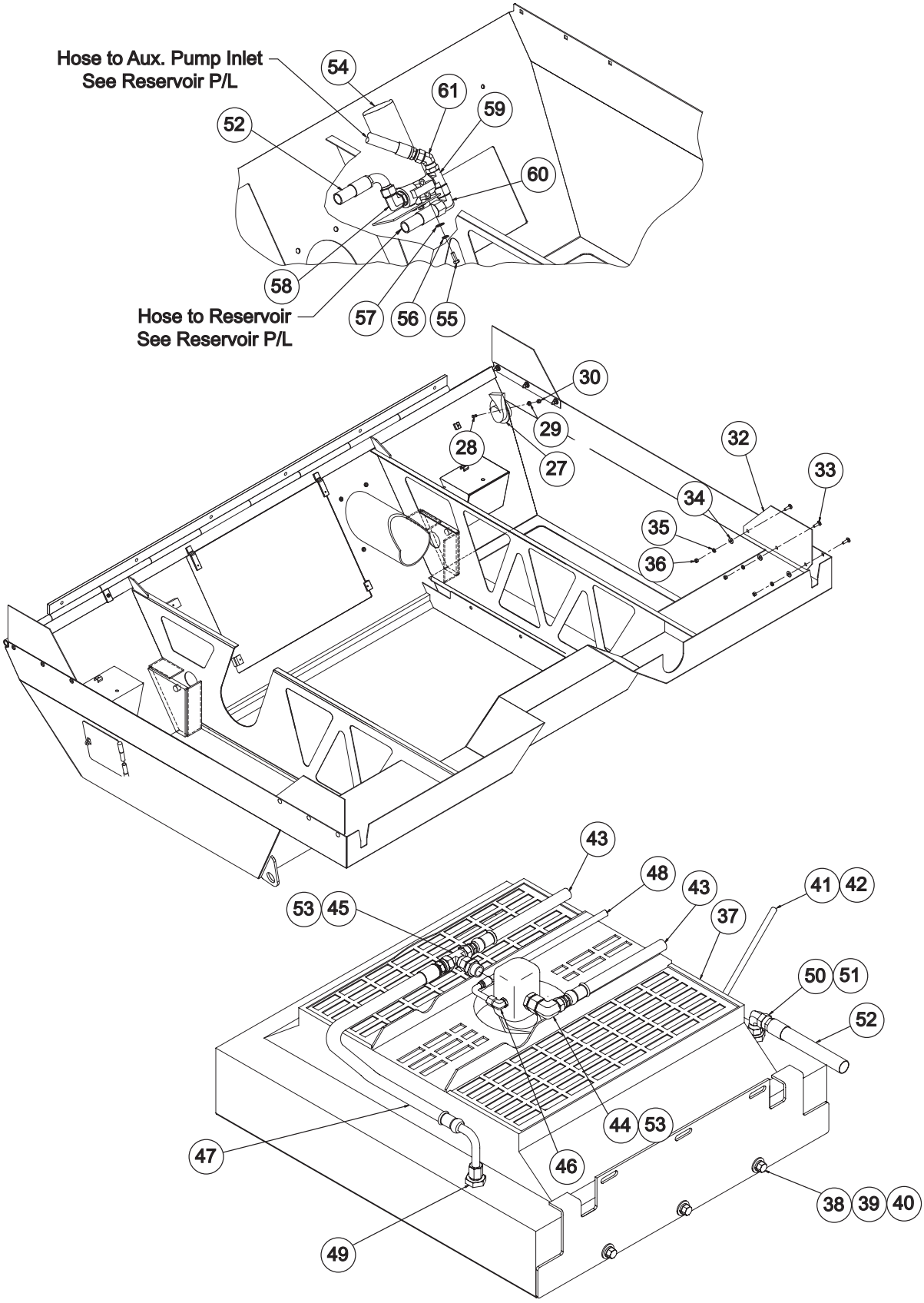

TEREX
CEDARAPIDS

Hood w/Charge Air Cooler

Parts List No. 05234HAA

Ref #	Part Number	REV	Part Name	Description	Qty
	0970432238		HOOD		1
	0970830023		SUB-ASSEMBLY	HOOD	1
1	0970450601	B	KIT	ACOUSTIC MATERIAL	1
2	4508000181	A	HYD UNIT	POWER PAK.	1
3	07383041		CAPSCREW	3/8"NC X 1-3/4"	2
4	07014003		WASHER	3/8" LOCK	2
5	0970431529	A	BLOCK	SPACER	1
6	07430416		CONNECTOR	3/8"JIC X 1/4"S	1
7	07430275		ELBOW	#6SAEM X #6JICM 90D	1
8	07430383		ELBOW	3/8" SWIVEL NUT	1
9	07430344		TEE	3/8"JIC SWIVEL NUT	2
10	0765102735	A	HOSE ASSY	3/8" ID X 27"	2
11	07389002		CAPSCREW	SCH 1/4NC X1/2	2
12	4509000785	-	H CYLINDER	2.5"BORE X 12"	2
13	0970431643	A	TRIP	CYLINDER HOOD LATCH	1
14	0970431797	B	FRAME	HOOD LATCH	1
15	0970431237	F	RELEASE	HOOD LATCH	1
16	0970431249	C	PIN	CYLINDER	1
17	07011066		COTTER PIN	5/32" X 2"	2
18	07238087		ROLL PIN	3/16" X 1"	2
19	4525901203	A	FITTING	ORIFICE 5/64" DIA	4
20	07430252		CONNECTOR	#6SAEM X #6JICM	4
21	076500823501	A	HOSE ASSY		2
22	07430426		ELBOW	#6 X 45 SWIVEL	2
23	4508052923	-	CLAMP HALF	FOR 1/2" TUBE	4
24	4508052926	-	PLATE	COVER FOR CLAMP	2
25	07383024		CAPSCREW	5/16"NC X 1-1/2	2
26	07014002		WASHER	5/16" LOCK	2
27	4601000112	B	HORN	12VAC	1
28	07383038		CAPSCREW	3/8" NC X 1"	1
29	07014003		WASHER	3/8" LOCK	1
30	07012025		HEX NUT	3/8" NC	1
31	0970441032	C	WIRE	GROUND (HOOD RAISE)	1
32	0970431288	E	HOOD	EXTENSION LH	4
33	07072051		CARR BOLT	3/8"NC X 3/4"	12
34	07014018		WASHER	3/8"	12
35	07014003		WASHER	3/8" LOCK	12
36	07012025		HEX NUT	3/8" NC	12
37	4590500916		COOLER	ENGINE	1
38	07383069		CAPSCREW	1/2"NC X 1-1/4"	6
39	07014020		WASHER	1/2"	6
40	07014005		WASHER	1/2" LOCK	6

TEREX
CEDARAPIDS

Hood w/Charge Air Cooler

Parts List No. 05234HAA

Ref #	Part Number	REV	Part Name	Description	Qty
41	5003000131	-	HOSE	FUEL LINE SAE30R7	6'
42	4519100475	A	CLAMP	5/8" MAX HOSE	1
43	0766305335	-	HOSE ASSY	3/4" ID X 53"	2
44	07430387		ELBOW	3/4" SWIVEL NUT	1
45	07430358		TEE	3/4"JIC SWIVEL NUT	1
46	07430275		ELBOW	#6SAEM X #6JICM 90D	1
47	0765303438	B	HOSE ASSY	3/4" ID X 34"	1
48	0765106738	A	HOSE ASSY	3/8" ID X 67"	1
49	07430264		CONNECTOR	1-5/16"SAE 3/4"	1
50	07430267		CONNECTOR	#16SAE #16JIC	1
51	07430406		ELBOW	1" SWIVEL	1
52	0763402635	-	HOSE ASSY	1" ID X 26"	1
53	07430263		CONNECTOR	1-1/16"SE 3/4"J	2
54	4517500141	A	FILTER	SPIN ON	1
55	07383038		CAPSCREW	3/8" NC X 1"	4
56	07014003		WASHER	3/8" LOCK	4
57	07014018		WASHER	3/8"	4
58	07430285		ELBOW	#16SAE #16JIC	1
59	07430307		TEE	1"	1
60	07430406		ELBOW	1" SWIVEL	1
61	07430429		ELBOW	1" SWIVEL	1

Cedarapids
A Terex Company

Hopper Insert
To Accomodate Paver Hoppers

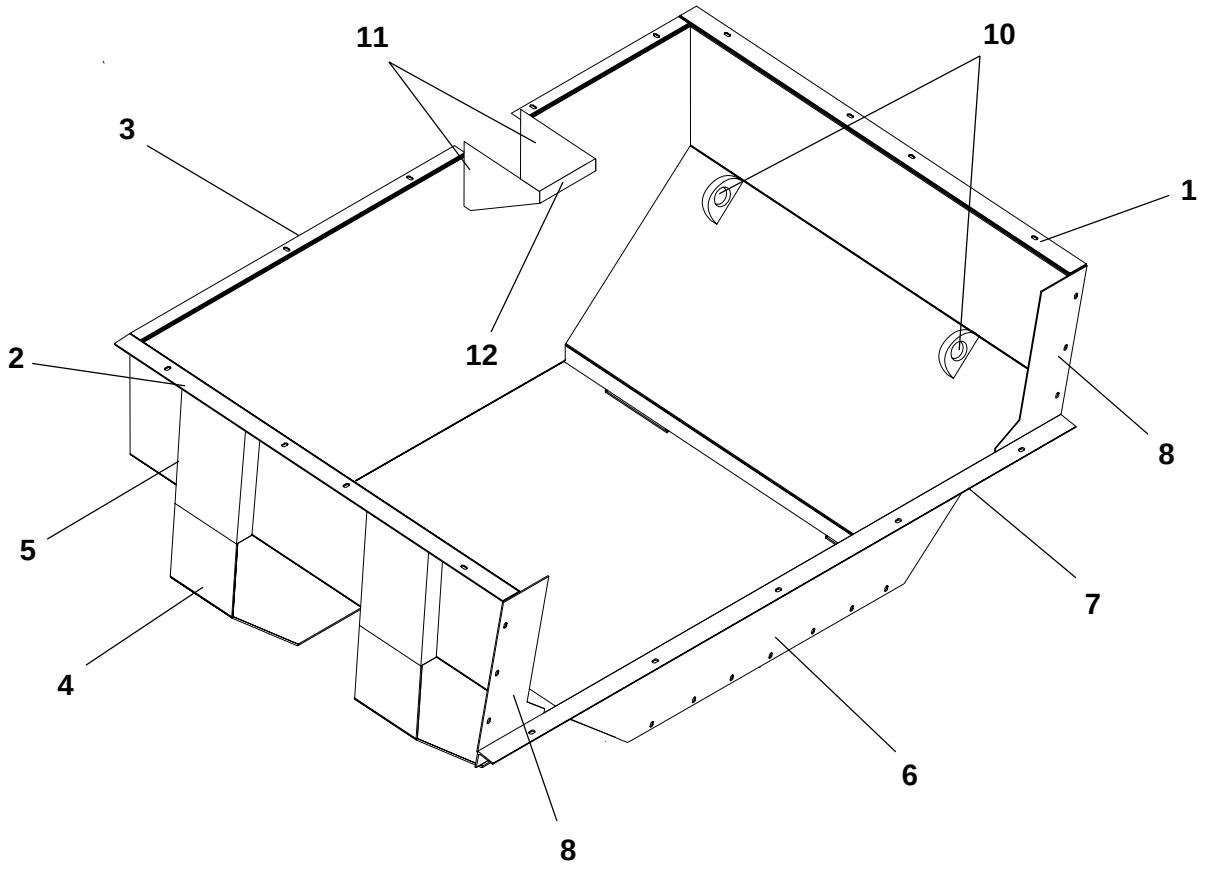

Ref. No.	Part Number	Description	Quantity
	9704-851-98	Hopper, Lower Insert - Complete	1
1	9704-852-01	Plate, L.H. Side	1
2	9704-852-02	Plate, R.H. Side	1
3	9704-852-03	Plate, Back Hopper Insert	1
4	9704-851-66	Support, Hopper Insert	4
5	9704-851-70	Channel	4
6	9704-852-04	Plate, Front Hopper Insert	1
7	9704-851-77	Angle	1
8	9704-851-81	Plate, Front Cover	2
9	9704-851-82	Angle, Back - *(Not Shown)*	1
10	5003-100-77	Eye, Lifting	4
11	9704-852-05	Flat, Hopper Insert	2
12	9704-852-06	Flat, Hopper Insert	1

Cedarapids
A Terex Company

Upper Extension for Paver Hopper

Ref. No.	Part Number	Description	Quantity
	05036VAF	Hopper Extension Parts List	-
1	9704-852-14	Frame, Back - Hopper Top	1
2	9704-851-83	Frame, Upper Extension - Left Hand	1
3	9704-851-84	Frame, Upper Extension - Right Hand	1
4	9704-852-19	Plate, Front - Hopper Top	1
5	7383-069	Capscrew, 1/2" x 1-1/4"	38
6	7014-020	Washer, 1/2" Flat	38
7	7014-005	Lockwasher, 1/2"	38
8	7012-027	Hex Nut, 1/2"	38

Ref. No.	Part Number	Description	Quantity
	05036VAH	Hopper Extension Parts List	-
	9709-850-01	Kit, Hopper Upper Extension - Complete	-
1	9704-852-14	Frame, Back - Hopper Top	1
2	9704-851-83	Frame, Upper Extension - Left Hand	1
3	9704-851-84	Frame, Upper Extension - Right Hand	1
4	9704-852-28	Plate, Front - Hopper Top	1
5	9704-852-29	Plate, Front - Hopper Top	1
6	7383-069	Capscrew, 1/2" x 1-1/4"	42
7	7014-020	Washer, 1/2" Flat	84
8	7014-005	Lockwasher, 1/2"	42
9	7012-027	Hex Nut, 1/2"	42

Note: No illustration is associated with this parts listing.
Please consult factory for more detailed parts replacement information.

TEREX
CEDARAPIDS

Hopper Wings Assembly

Parts List No. 05231ADC

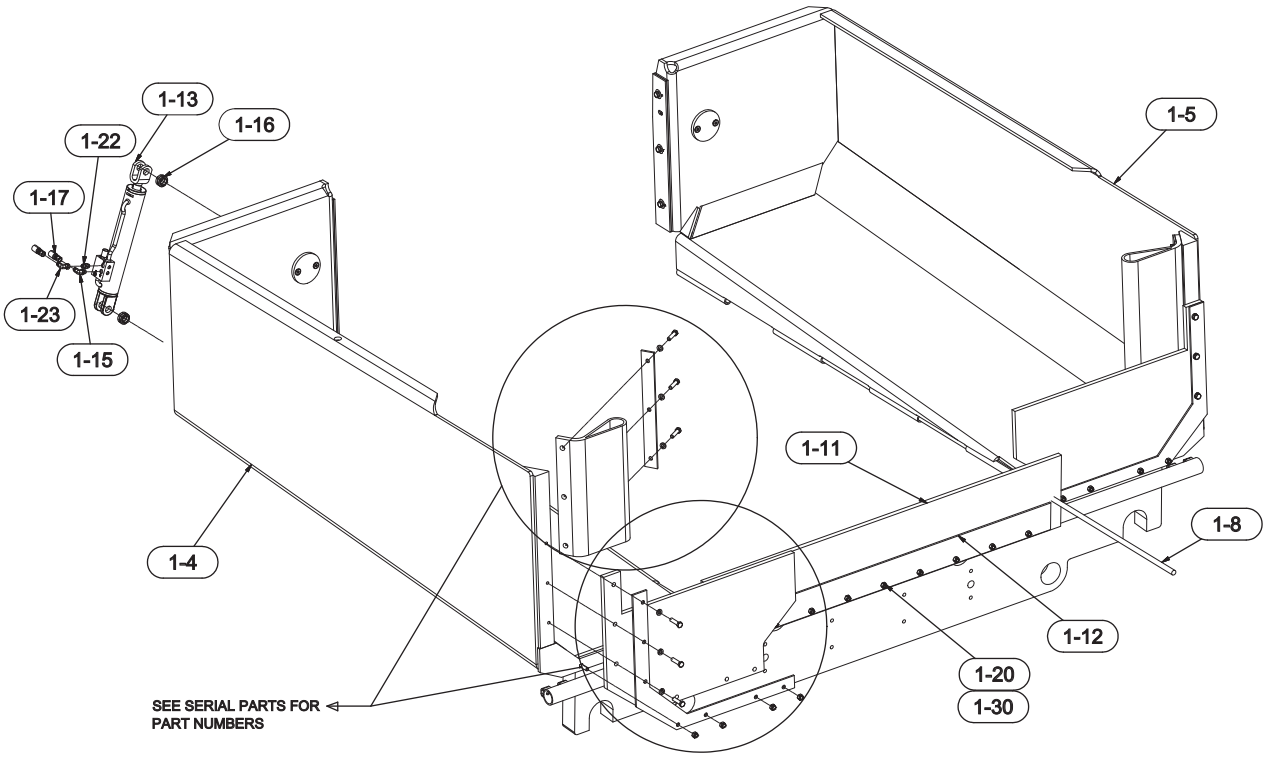

Ref #	Part Number	REV	Part Name	Description	Qty
-	0970600089	B	ASSEMBLY DRAWING	HOPPER WINGS & FLASHING	REF
104	0970600085	-	WING	HOPPER-RH *(See Form 24823)*	1
105	0970600086	-	WING	HOPPER-LH *(See Form 24824)*	1
108	0970401365		HINGE ROD	.75DIA X 92	2
111	0970401270	-	FLASHING	HOPPER	1
112	0970400915		FLAT	FLASHING CLAMP	1
113	4509001050	A	HYDRAULIC CYLINDER	PAVER HOPPER WING	2
114	07011066		COTTER PIN	5/32" X 2"	8
115	07430275		ELBOW	#6SAEM X #6JICM 90D	4
116	4513401101	A	BUSHING	1" BORE BALL	4
117	076510213301	A	HOSE ASSY	3/8" ID X 21"	4
118	07430385		UNION	1/2"	2
120	07383072		CAPSCREW	1/2"NC X 2"	9
122	07430252		CONNECTOR	#6SAEM X #6JICM	2
123	07430383		ELBOW	3/8" SWIVEL NUT	2
130	4589010228	B	LOCKNUT	1/2"NC	9

TEREX
CEDARAPIDS

RH Hopper Wing
Part No. 0970600085

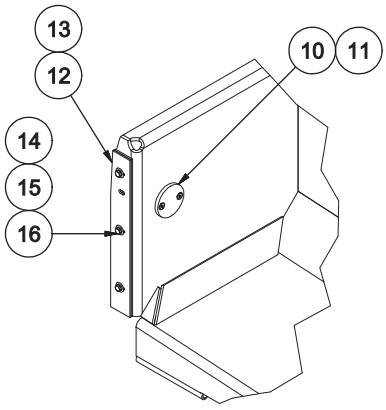

DETAIL B

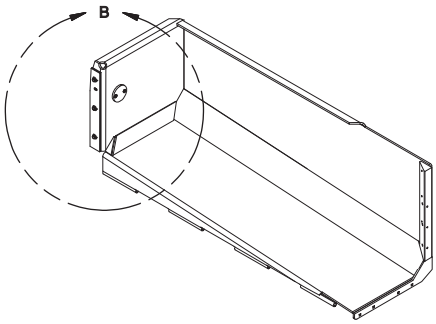

Ref #	Part Number	REV	Part Name	Description	Qty
10	0970401409	-	COVER	HOPPER WINGS	1
11	07389046		CAPSCREW	SCH1/2NCX1-1/2	2
12	0970401015	B	PLATE	REAR HOPPER SEAL	1
13	0970401018	A	WIPER	REAR HOPPER SEAL	1
14	07014020		WASHER	1/2"	3
15	07014005		WASHER	1/2" LOCK	3
16	07383071		CAPSCREW	1/2"NC X 1-3/4"	3

TEREX
CEDARAPIDS

LH Hopper Wing

Part No. 0970600086

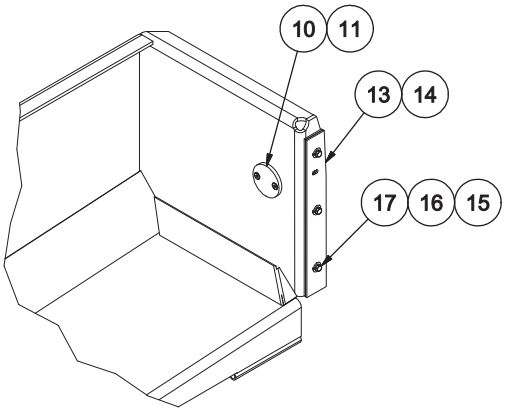

DETAIL B

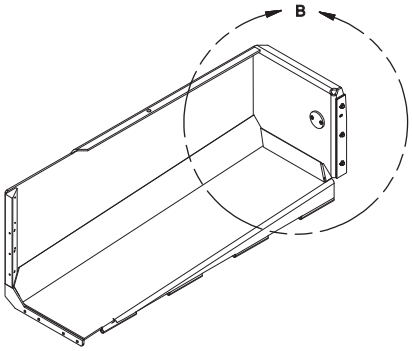

Ref #	Part Number	REV	Part Name	Description	Qty
10	0970401409	-	COVER	HOPPER WINGS	1
11	07389046		CAPSCREW	SCH1/2NCX1-1/2	2
13	0970401015	B	PLATE	REAR HOPPER SEAL	1
14	0970401018	A	WIPER	REAR HOPPER SEAL	1
15	07014020		WASHER	1/2"	3
16	07014005		WASHER	1/2" LOCK	3
17	07383071		CAPSCREW	1/2"NC X 1-3/4"	3

TEREX
CEDARAPIDS

Main Frame Parts

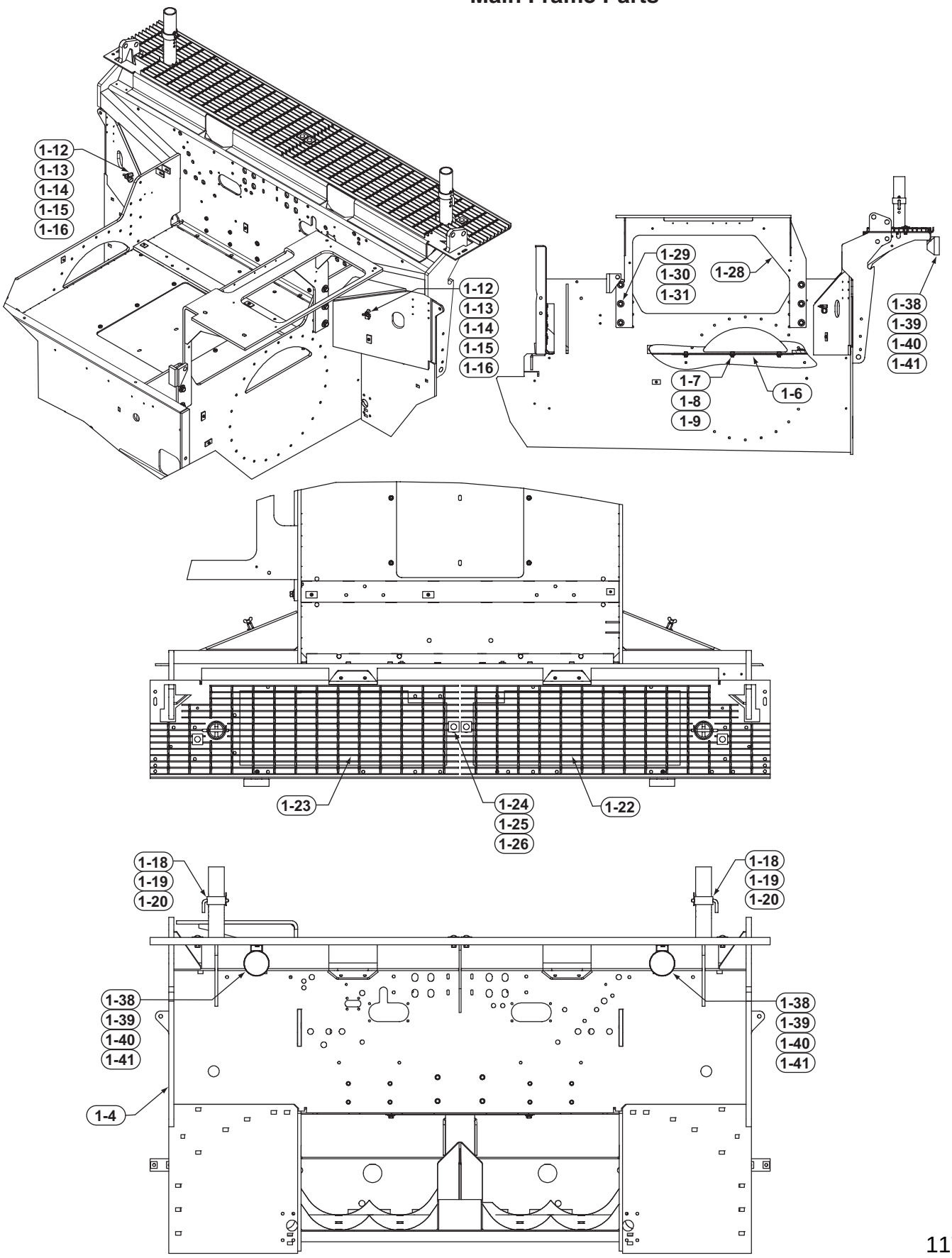

TEREX
CEDARAPIDS

Main Frame Parts

Parts List No. 05231AAC

Ref #	Part Number	REV	Part Name	Description	Qty
-	0970600078	A	ASSEMBLY DRAWING	662RM MAIN FRAME	REF
103	0970600092		FRAME KIT	662RM FRAME *(Not Shown - See Form 25200)*	1
104	0970600091		FRAME	662RM MAIN FRAME	1
106	0970400786		DOOR	BASKET FLOOR	1
107	07383068		CAPSCREW	1/2" NC X 1"	6
108	07014020		WASHER	1/2"	6
109	07014005		WASHER	1/2" LOCK	6
112	4589025229	-	CAPSCREW	3/8"NC X 2-1/2"	2
113	07014003		WASHER	3/8" LOCK	2
114	07509009		HOSE CLAMP	1-1/8"	2
115	07056011		WING NUT	3/8"NC	2
116	4589010050	-	NUT	COUPLING-3/8NC X 1/2N	2
118	0970445140	-	COLLAR	SEAT HEIGHT	2
119	0970445141	A	PIN	SEAT	2
120	4589080019	-	HAIR PIN	1-7/8" LONG	2
121	0970900009		KIT	WALKWAY GRATNG	1
122	0970445338		GRATING	R.H.	1
123	0970445337		GRATING	L.H.	1
124	0970401174		RETAINER	GRATE	4
125	07072103		CARR BOLT	1/2"NC X 2"	4
126	07012027		HEX NUT	1/2" NC	4
128	0970401380	B	SUPPORT	ELECTRICAL BOX	1
129	07383100		CAPSCREW	5/8" NC X 1-1/2"	6
130	07014007		WASHER	5/8" LOCK	6
131	07014022		WASHER	5/8"	6
134	4632000121	-	CLIP	HARNESS	2
135	4632000106	A	STRAP		6
138	4627025212	-	LAMP	FLOOD 12V PAR 36	2
139	07383038		CAPSCREW	3/8" NC X 1"	2
140	07014003		WASHER	3/8" LOCK	2
141	07012025		HEX NUT	3/8" NC	2

TEREX
CEDARAPIDS

Frame, Hood & Hopper Kit

NOTE: The items shown are ordered by the factory as a kit for assembly purposes. They are identical to parts that may be listed on the individual component parts pages. Typical illustration is shown. Appearance and quantity of some items may vary depending on model.

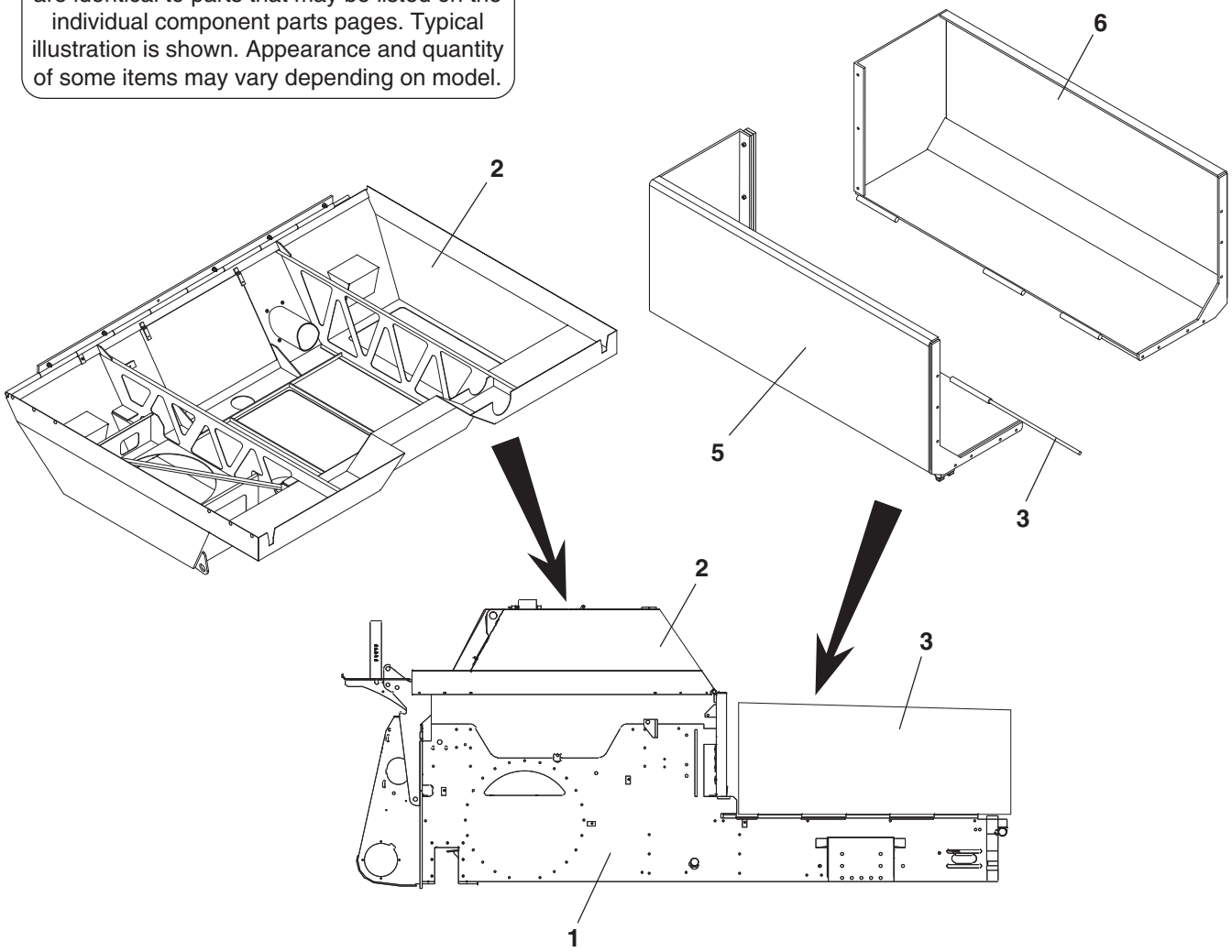

Ref #	Part Number	REV	Part Name	Description	Qty
-	0970600092		KIT	MAIN FRAME	REF
1	0970600091		MAIN FRAME		1
2	0970432238		HOOD		1
3	0970401665		HINGE ROD	.75 DIAMETER X 92	2
4	0970400786		DOOR	BASKET FLOOR *(Not Shown)*	1
5	0970600086		HOPPER WING	RIGHT	1
6	0970600085		HOPPER WING	LEFT	1

TEREX
CEDARAPIDS

Operator Access Walkways & Railing

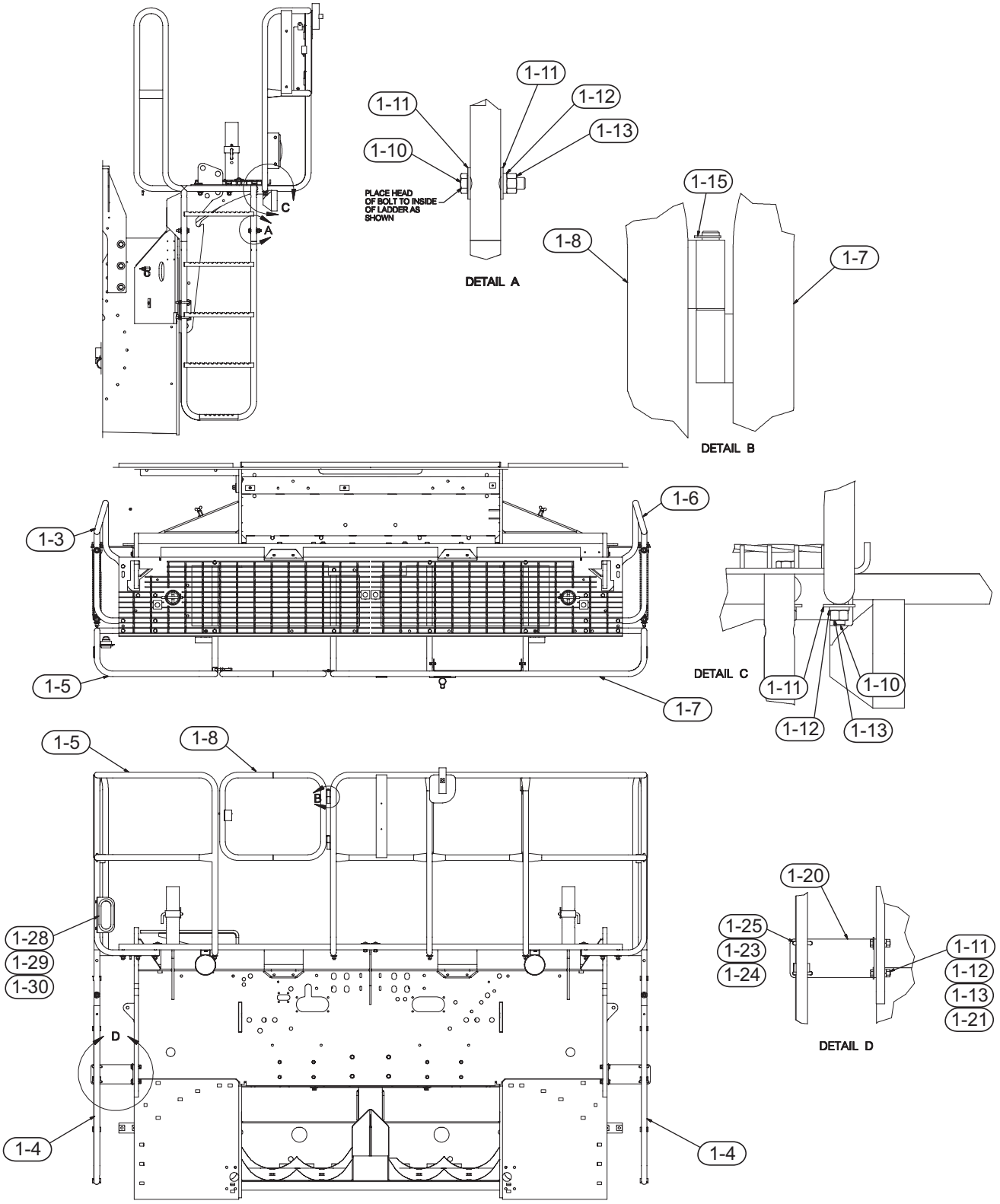

TEREX
CEDARAPIDS

Operator Access Walkways & Railing

Parts List No. 05231EDC

Ref #	Part Number	REV	Part Name	Description	Qty
-	0970650014		ASSEMBLY DRAWING	WALKWAY RAILING	REF
1-3	0970650001	B	WELDMENT	RAILING-LH	1
1-4	0970650002	C	WELDMENT	LADDER	2
1-5	0970650003	B	WELDMENT	RAILING-LH	1
1-6	0970650004	B	WELDMENT	RAILING-RH	1
1-7	0970650005	C	WELDMENT	RAILING-RH	1
1-8	0970650011	-	WELDMENT	DOOR REAR	1
1-10	07383074		CAPSCREW	1/2" NC X 2-1/2"	26
1-11	07014020		WASHER	1/2"	34
1-12	07014005		WASHER	1/2" LOCK	30
1-13	07012027		HEX NUT	1/2" NC	30
1-15	07253013	-	RING	RETAINING .375 I.D.	2
1-20	0970650007		BRACKET	0.25X4.50X12.07	2
1-21	07383072		CAPSCREW	1/2"NC X 2"	4
1-23	07014003		WASHER	3/8" LOCK	4
1-24	07012025		HEX NUT	3/8" NC	4
1-25	0441200801	D	U BOLT		4
1-28	4627025322		LIGHT	TIAL W/CONNECTOR	1
1-29	4627025006		BRACKET	MOUNTING-TAIL LIGHT	1
1-31	07383020		CAPSCREW	5/16"NC X 3/4"	2
1-33	07014002		WASHER	5/16" LOCK	2
1-34	07012024		HEX NUT	5/16" NC	2

TEREX
CEDARAPIDS

Operators Seat

Parts List No. 05032KGC or 5032KGD

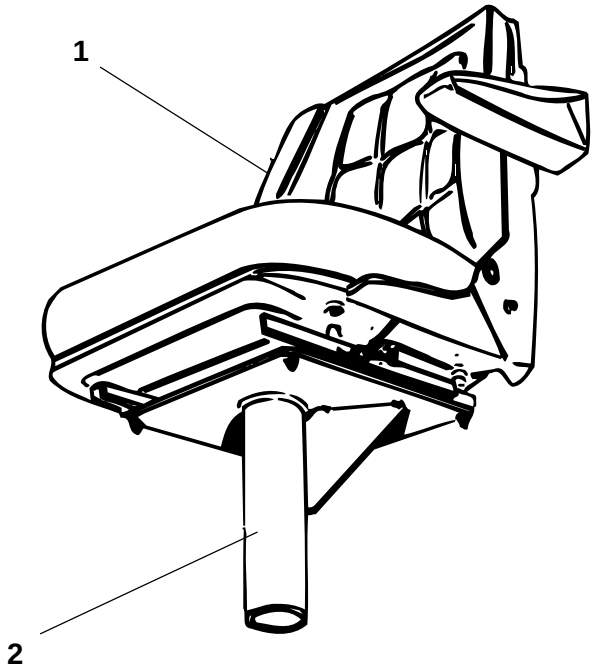

Ref. No.	Part Number	Description	Quantity
1	45037-001-12	Seat, Operators (Complete)	As Req
2	9704-451-38	Pedestal, Seat	As Req
	Seat Mounting Hardware - Not Identified on Illustration		
3	7014-002	Lockwasher, 5/16"	As Req
4	7012-024	Hex Nut, 5/16"	As Req
5	7014-017	Washer, 5/16" Flat	As Req

TEREX
CEDARAPIDS

Serial Parts

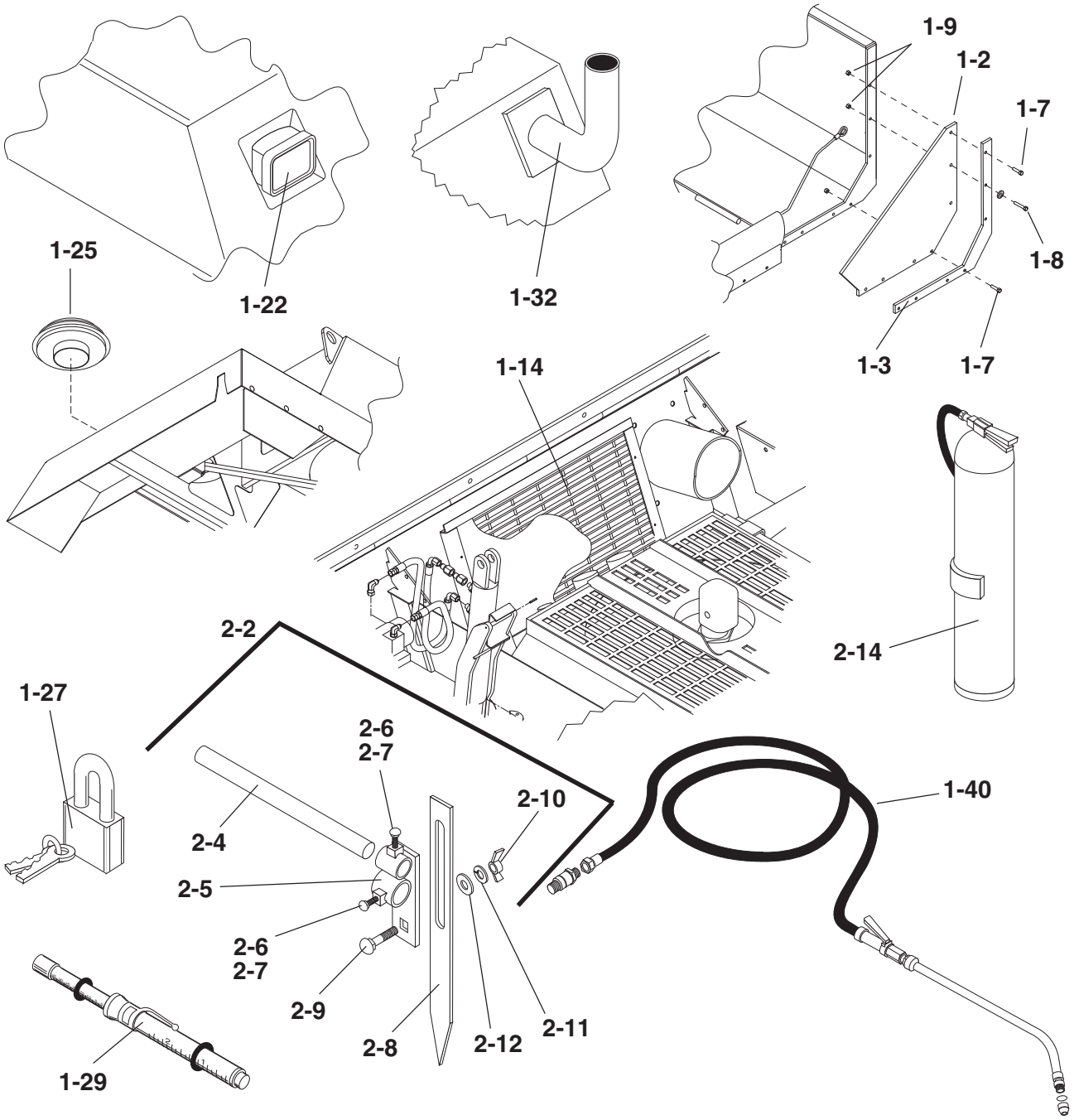

TEREX
CEDARAPIDS

Serial Parts
Parts List 05234LAF

Ref #	Part Number	REV	Part Name	Description	Qty
1-2	0970401339	-	FLASHING	HOPPER WING	2
1-3	0970401027		FLAT	GUARD	2
1-4	0970215130		FLAT	CLAMP *(Not Shown)*	2
1-5	0970215129		BELTING	*(Not Shown)*	2
1-7	07072103		CARR BOLT	1/2"NC X 2"	12
1-8	07072105		CARR BOLT	1/2"NC X 3"	2
1-9	4589010228	B	LOCKNUT	1/2"NC	14
1-12	4173300301	E	TAPE	PLASTIC FOAM 1"X3/8" *(Not Shown)*	14'
1-14	0970431837	-	GRILL	RADIATOR	1
1-15	4589080041	-	CLIP	ALUMINUM ANCHOR *(Not Shown)*	4
1-16	07435139		MACH SCREW	1/4"NC X 1-1/4 *(Not Shown)*	4
1-17	07438007		WASHER	#11 SHKP LK *(Not Shown)*	4
1-19	4571000309	C	STACK	6"ID X 36" *(Not Shown)*	1
1-22	4627000508	-	LIGHT	UTILITY 12.8V	2
1-25	456900013204	A	HOOD	AIR INLET	1
1-27	4600000404	B	PADLOCK	#7KA MASTER	7
1-29	0970480043	B	KIT	BELT TENSIONING	1
1-32	0970431973	B	EXTENSION	EXHAUST	1
1-33	07383038		CAPSCREW	3/8" NC X 1" *(Not Shown)*	4
1-34	07014003		WASHER	3/8" LOCK *(Not Shown)*	4
1-40	0970445415		SPRAYDOWN HOSE	W/DISCONNECT *(See Form 24350)*	1
1-42	4508052707	-	TEST HOSE	36" *(Not Shown)*	1
1-44	4508052705	-	ADAPTER	GAUGE *(Not Shown)*	1
1-46	0970475013	B	STROBE	WITH GUARD *(See Form 22374)*	1
1-47	07012003		SQUARE NUT	3/8" NC *Not Shown)*	1
1-48	05036PGB04	F	BOLT	3/8" RT ANGLE *Not Shown)*	1
2-2	0970445063	A	ASSEMBLY	GUIDE MARKER	1
2-4	40509041		PIPE	1.50 STD X 41.00	1
2-5	0970490211	A	BRACKET	BAR GUIDE	1
2-6	07383070		CAPSCREW	1/2"NC X 1-1/2	5
2-7	07012005		SQUARE NUT	1/2" NC	5
2-8	05036KD14	D	MARKER	GUIDE	1
2-9	07072052		CARR BOLT	3/8"NC X 1"	1
2-10	07056011		WING NUT	3/8"NC	1
2-11	07014003		WASHER	3/8" LOCK	1
2-12	07014018		WASHER	3/8"	1
2-14	4551500403	A	EXTINGUISHER	FIRE	1
2-15	07435134		MACH SCREW	1/4"NC X 5/8" *(Not Shown)*	5
2-16	07014016		WASHER	1/4" *(Not Shown)*	5
2-17	4589010236	-	LOCKNUT	1/4"NC *(Not Shown)*	5

TEREX
CEDARAPIDS

Spray Down Hose Assembly

Parts List 0970445415

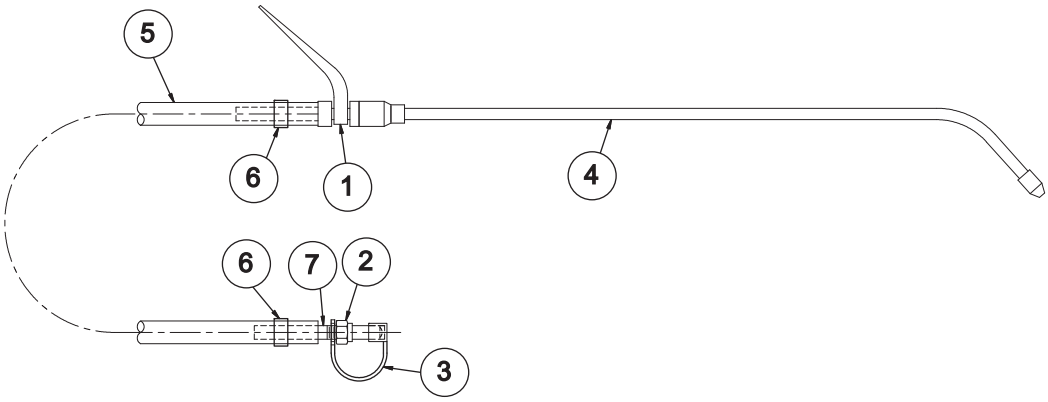

Ref #	Part Number	REV	Part Name	Description	Qty
-	0970445415		SPRAYDOWN HOSE	W/DISCONNECT	1
1	4525100176		VALVE	SHUT OFF	1
2	451915042904		NIPPLE	1/8" NPT BRASS	1
3	451915042902		CAP	DUST	1
4	4525100605		NOZZLE	18" EXTENSION	1
5	5003000102		HOSE	3/8" ID	30'
6	4519100405		CLAMP	3/8" ID	2
7	405000025002		NIPPLE	1/8" NPT X 2-1/2"	1

TEREX
CEDARAPIDS

Strobe Kit

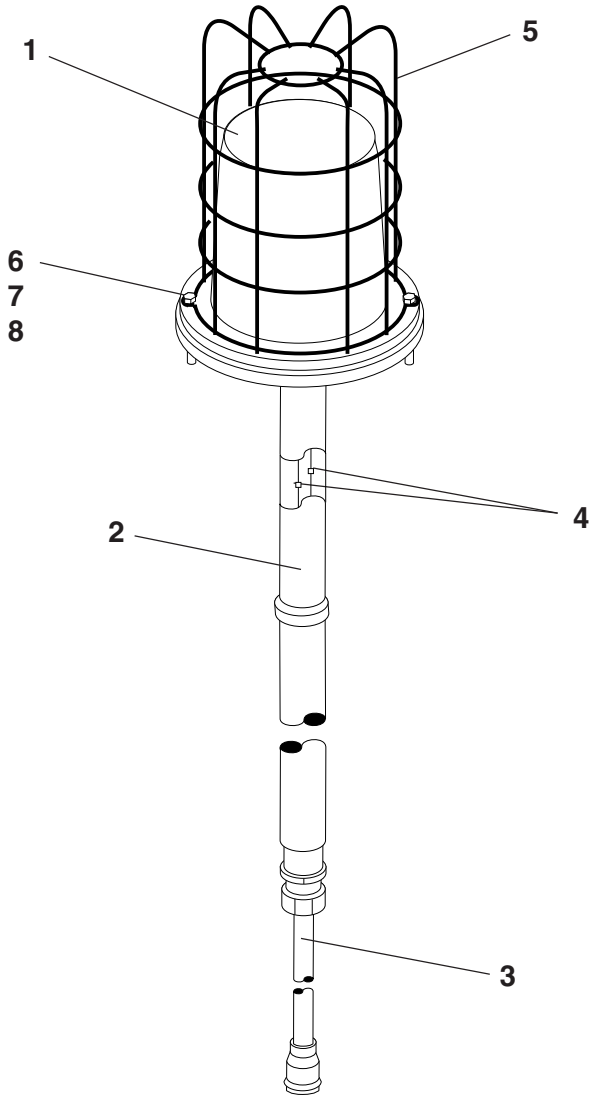

Ref. No.	Part Number	Description	Quantity
	9704-750-13	Strobe Kit - Complete	1
1	46270-003-12	Lamp, Strobe	1
2	9704-750-12	Mount, Strobe	1
3	9704-410-47	Cable	1
4	46275-001-28	Lug	2
5	46270-003-13	Guard, Strobe	1
6	7383-006	Capscrew, 1/4" NC x 1"	2
7	7014-001	Washer, 1/4" Lock	2
8	7012-023	Nut, Hex 1/4" NC	2
9	7012-003	Nut, Square 3/8" NC - *(Not Shown)*	1
10	5036PGB04	Bolt, Right Angle 3/8" - *(Not Shown)*	1

TEREX
CEDARAPIDS

Hose Reel Installation

Parts List No. 05231EMA

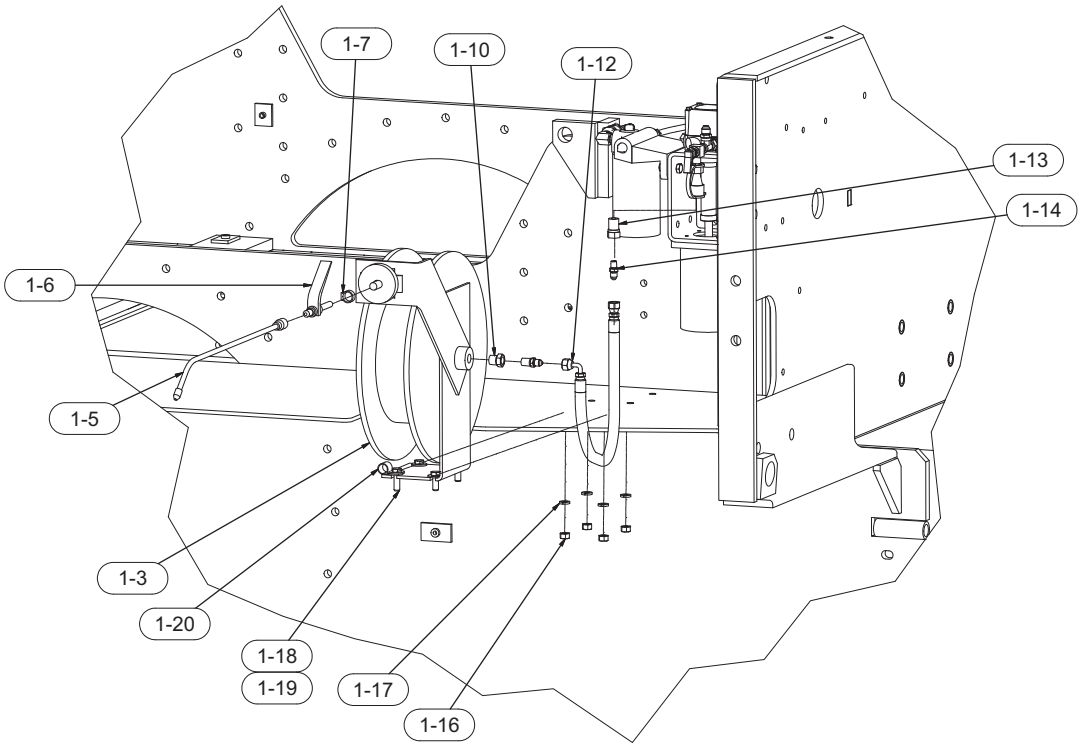

Ref #	Part Number	REV	Part Name	Description	Qty
-	0970645173	A	ASSEMBLY DRAWING	HOSE REEL	REF
103	4519100729	A	HOSE REEL	W/30' OF HOSE	1
105	4525100605	B	NOZZLE EXT		1
106	4525100176	B	VALVE		1
107	4519100790	-	CLAMP	MINI WORM	1
110	4572076902	-	BUSHING	3/8"P X 1/4"P	1
111	07430002		CONNECTOR	#4MNPT - #4MJIC	1
112	0765002735	A	HOSE ASSY	1/4" ID X 27"	1
113	451915042904	-	NIPPLE	1/8" NPT BRASS	1
114	07430001		CONNECTOR	1/8"NPT-1/4"JIC	1
116	07012025		HEX NUT	3/8" NC	4
117	07014003		WASHER	3/8" LOCK	4
118	07383039		CAPSCREW	3/8"NC X 1-1/4	4
119	07014018		WASHER	3/8"	4
120	07509004		HOSE CLAMP	5/8"	1

TEREX
CEDARAPIDS

Tool Box Assembly

Parts List No. 05231SCC

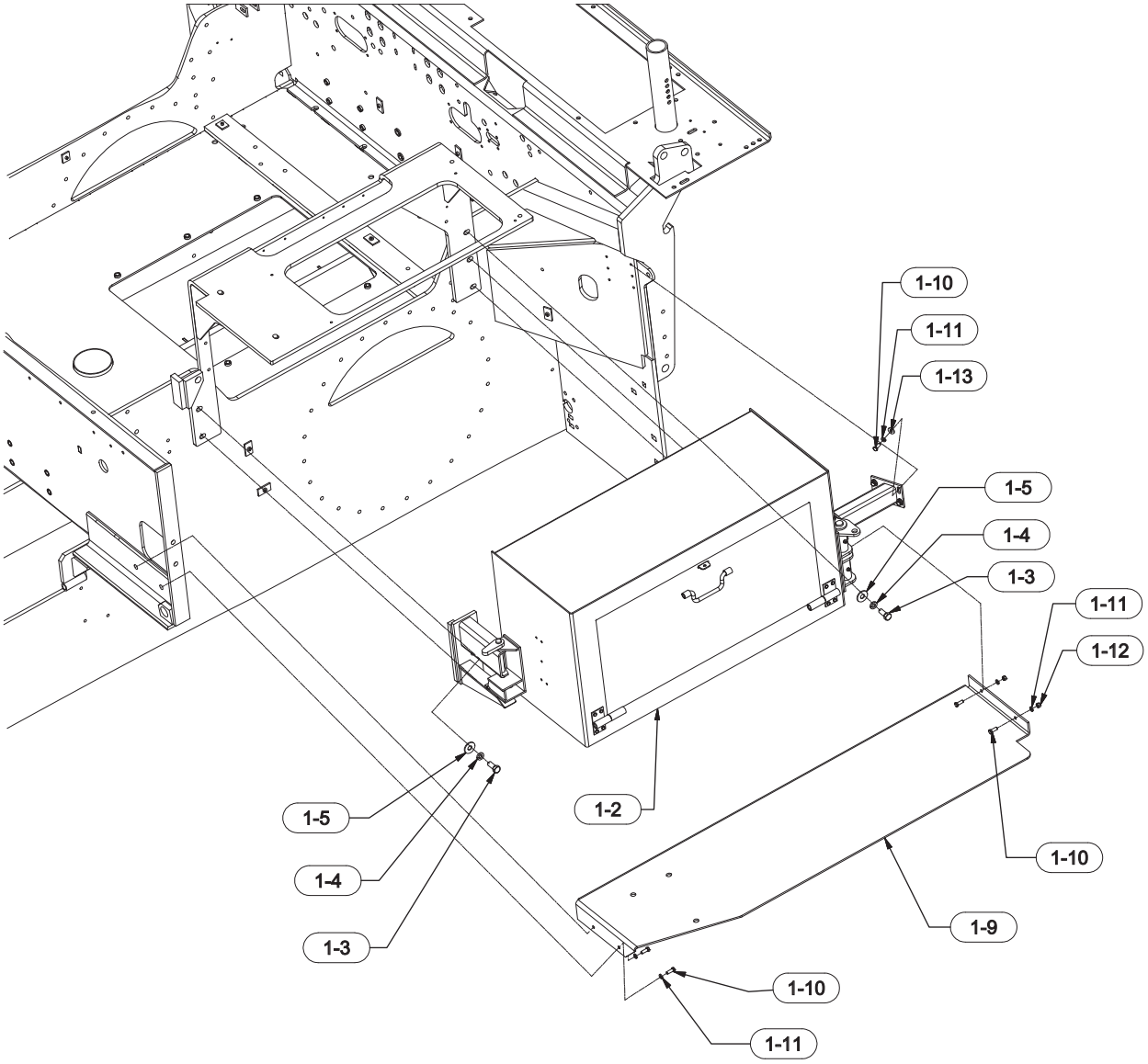

Ref #	Part Number	REV	Part Name	Description	Qty
-	0970630122		ASSEMBLY DRAWING	TOOL BOX	REF
102	0970630128		ASSEMBLY	TOOLBOX *(See Form 25198)*	1
103	07383100		CAPSCREW	5/8" NC X 1-1/2"	5
104	07014007		WASHER	5/8" LOCK	5
105	07014022		WASHER	5/8"	5
109	0970630114		PLATFORM	TOOL BOX	1
110	07383038		CAPSCREW	3/8" NC X 1"	8
111	07014003		WASHER	3/8" LOCK	8
112	07012025		HEX NUT	3/8" NC	2
113	07014002		WASHER	5/16" LOCK	4

TEREX
CEDARAPIDS

Tool Box

Part No. 0970630128

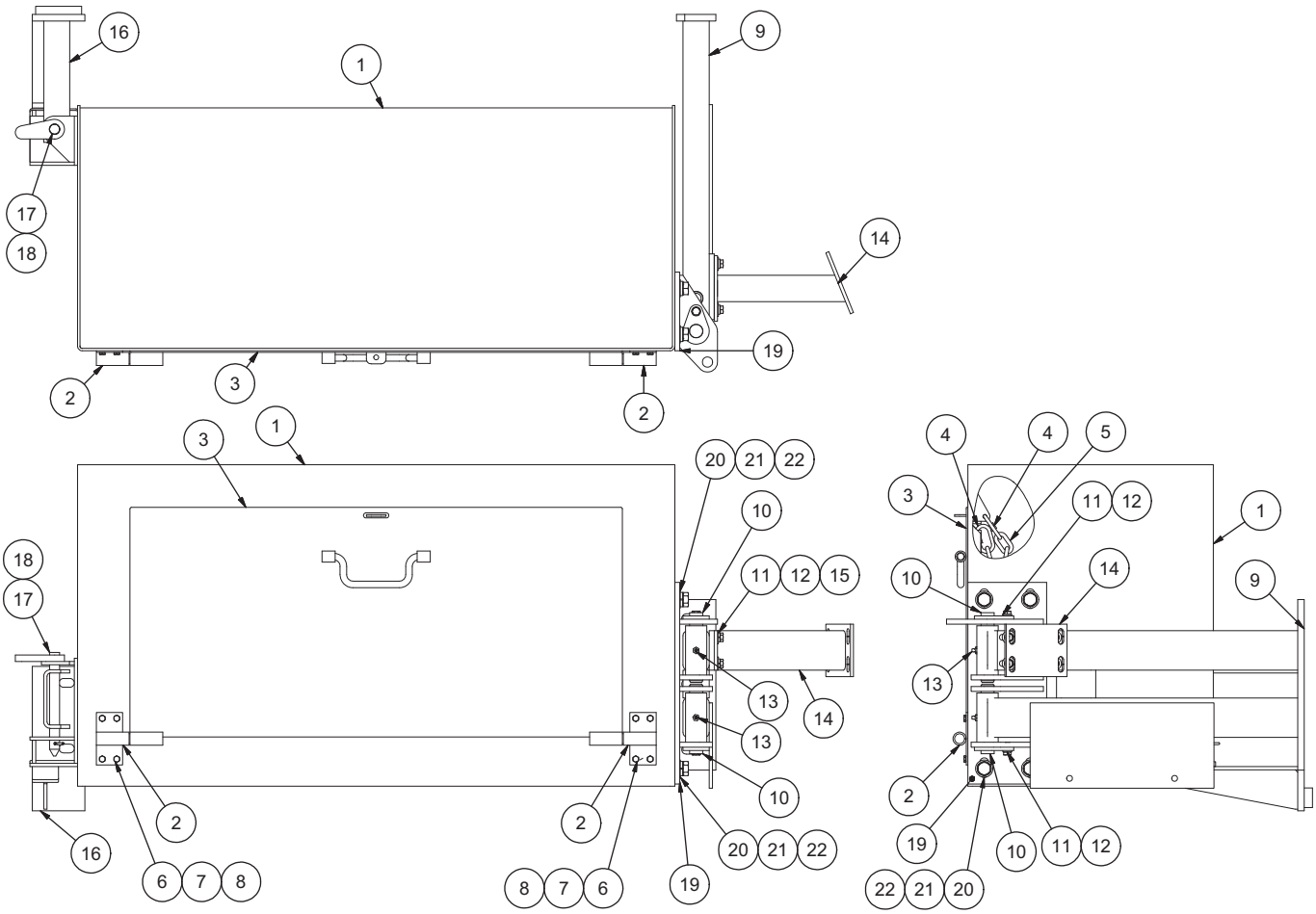

Ref #	Part Number	REV	Part Name	Description	Qty
1	0970630129		WELDMENT	TOOL BOX	1
2	0970630022		HINGE	DOOR	2
3	0970630019		WELDMENT	DOOR	1
4	07262024		CONNECTOR	CHAIN JAW 1/4"	4
5	0970630024		CHAIN		2
6	07383004		CAPSCREW	1/4"NC X 3/4	8
7	07012023		HEX NUT	1/4" NC	8
8	07014001		WASHER	1/4" LOCK	8
9	0970630118		WELDMENT	SUPPORT - TOOL BOX	1
10	0970630013		PIN	PIVOT	2
11	07014003		WASHER	3/8" LOCK	6
12	07383036		CAPSCREW	3/8" NC x 3/4"	6
13	07051001		FITTING	GREASE 1/8" STR	2
14	0970630117		WELDMENT	TOOLBOX/FUEL TANK GUSSET	1
15	07014018		WASHER	3/8"	4
16	0970630017		WELDMENT	RAMP TOOL BOX	1
17	0970630014		PIN	LOCKING	1
18	0970630025		HAIRPIN	COTTER PIN	1
19	0970630131		WELDMENT	PIVOT TOOL BOX	1
20	07465002		WASHER	5/8" HARDENED FLAT	4
21	07014007		WASHER	5/8" LOCK	4
22	07383100		CAPSCREW	5/8" NC X 1-1/2"	4

Cedarapids
A Terex Company

Umbrella

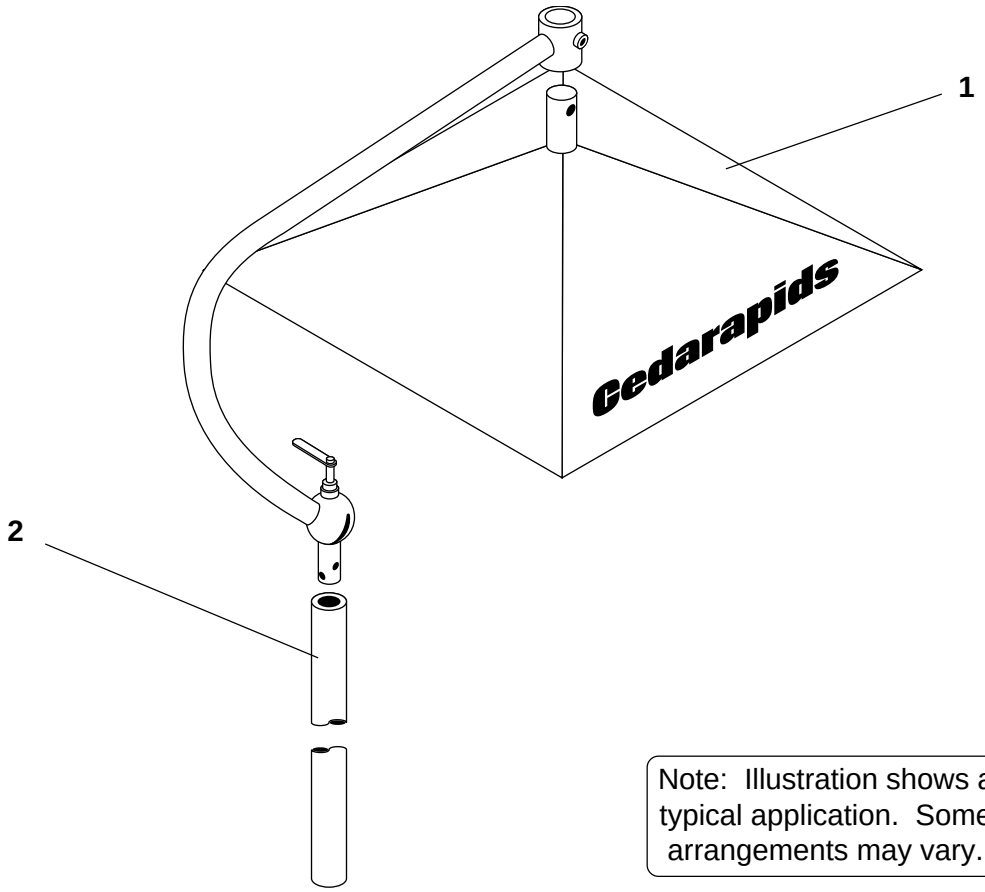

Note: Illustration shows a typical application. Some arrangements may vary.

Ref. No.	Part Number	Description	Quantity
1	9704-951-19	Umbrella - Assembly	1
2	7383-068	Capscrew, 1/2" NC x 1"	4
	7012-027	Nut, Hex 1/2" NC	4
	7014-005	Lockwasher	4
3	* 5036VK03	Bracket, Umbrella *(Not Shown)*	1

* Item 3 is used on Eng Bom 05046YUB only. And applies to older Pavers.

TEREX
CEDARAPIDS

Oscillating Push Beam Spacer Assembly

09704-952-88

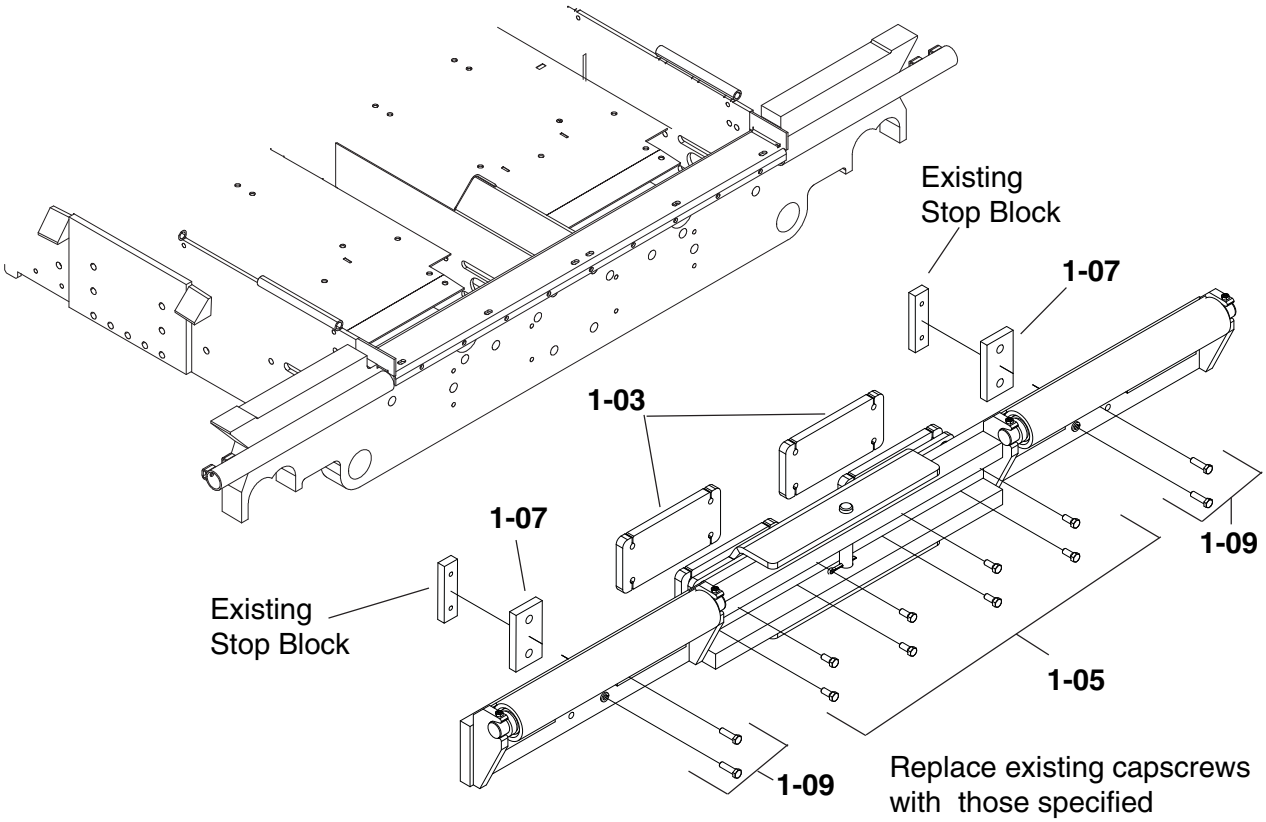

Ref. No.	Part Number	Description	Quantity
1-03	0970485130	Plate, Spacer	2
1-05	07383104	Capscrew, 5/8" NC x 2-1/2"	8
1-07	0970495281	Block, Spacer	2
1-09	07383103	Capscrew, 5/8" NC x 2-1/4"	4

TEREX
CEDARAPIDS

Oscillating Push Roller Assembly

09704-952-80

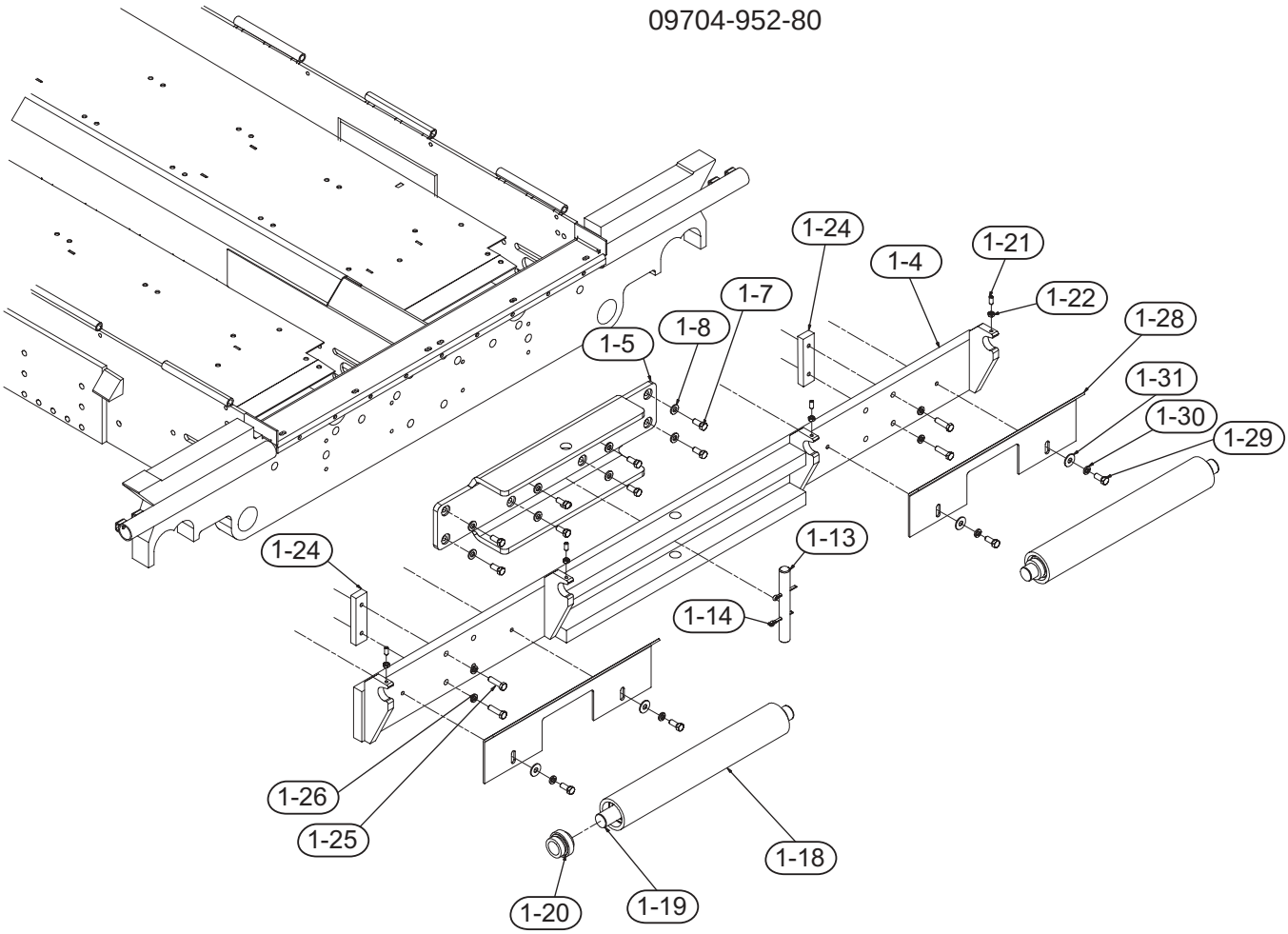

Ref #	Part Number	REV	Part Name	Description	Qty
1-1	0970495280		ASSEMBLY	PUSH ROLLER	REF
1-4	0970495277	A	BEAM	OSCILLATING BEAM	1
1-5	0970485157		MOUNT	OSCILLATING	1
1-7	07383100		CAPSCREW	5/8" NC X 1-1/2"	8
1-8	07465002		WASHER	5/8" HARDENED FLAT	8
1-13	0970400374	B	PIN	OSC BEAM	1
1-14	07011113		COTTER PIN	3/8" X 3"	2
1-18	05036AD32	E	TUBE	ROLLER	2
1-19	0970495259	A	SHAFT	PUSH-ROLLER	2
1-20	07302013		BALL BRG	1-15/16"BORE	4
1-21	07130105		SET SCREW	1/2"NC X 1-1/4"	4
1-22	07017027		HEX NUT	1/2" NC JAM	4
1-24	0970495279		BLOCK	OSCILLATION STOP	2
1-25	07383103		CAPSCREW	5/8"NC X 2-1/4	4
1-26	07014007		WASHER	5/8" LOCK	4
1-28	0970495282		SCRAPER	PUSH ROLLER	2
1-29	07383100		CAPSCREW	5/8" NC X 1-1/2"	4
1-30	07014007		WASHER	5/8" LOCK	4
1-31	07014022		WASHER	5/8"	4

Return to Table of Contents Page

TEREX
CEDARAPIDS

Table of Contents

Frame Raise Mounting & Plumbing Components - 05234RCD

Ref No.	Description	Page No.
1	Frame Raise Plumbing Illustration - Part 1	2
2	Frame Raise Plumbing Illustration - Part 2	3
3	Frame Raise Plumbing Parts List	4-5
4	Track Tension Valve Sub-Assembly	6
5	Hydraulic Cylinder	7
6	Frame Raise Eccentric Sub-Assembly	8

Return to Table of Contents Page

TEREX
CEDARAPIDS

Frame Raise Plumbing

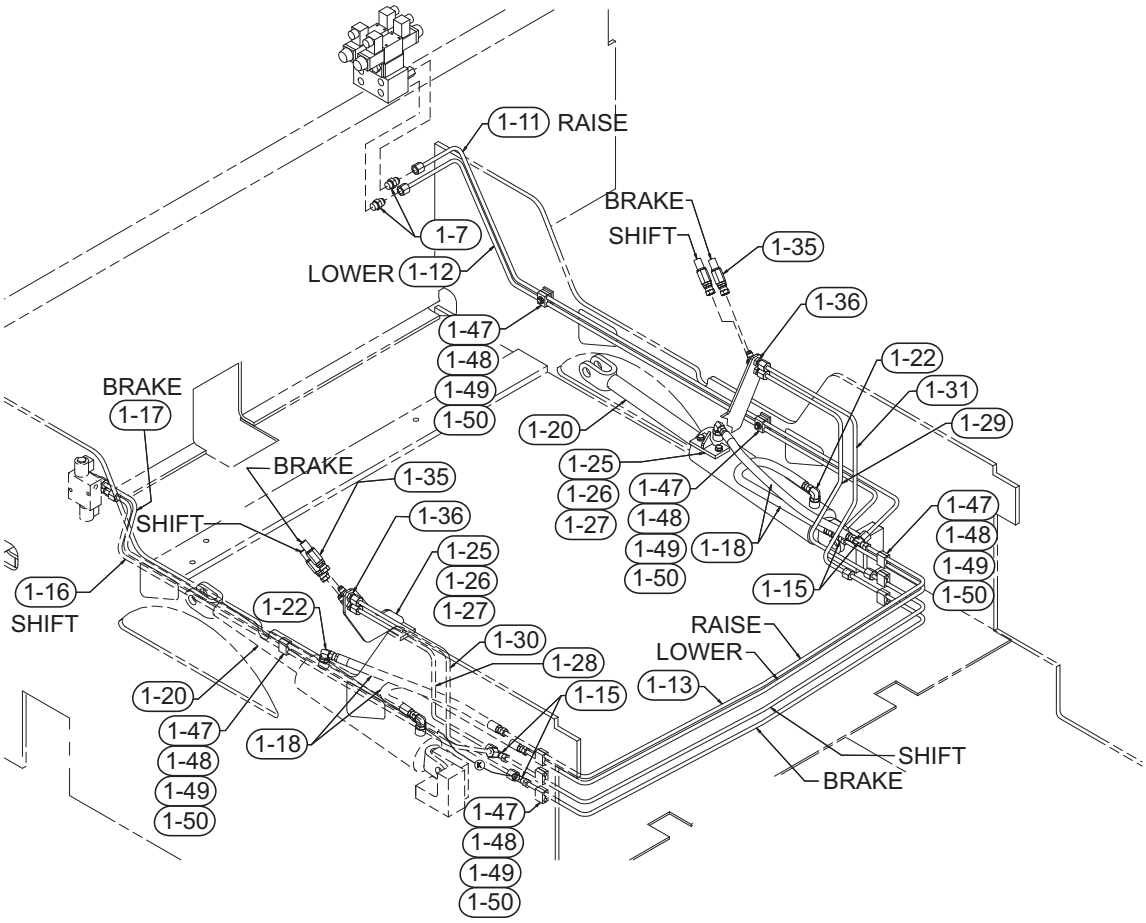

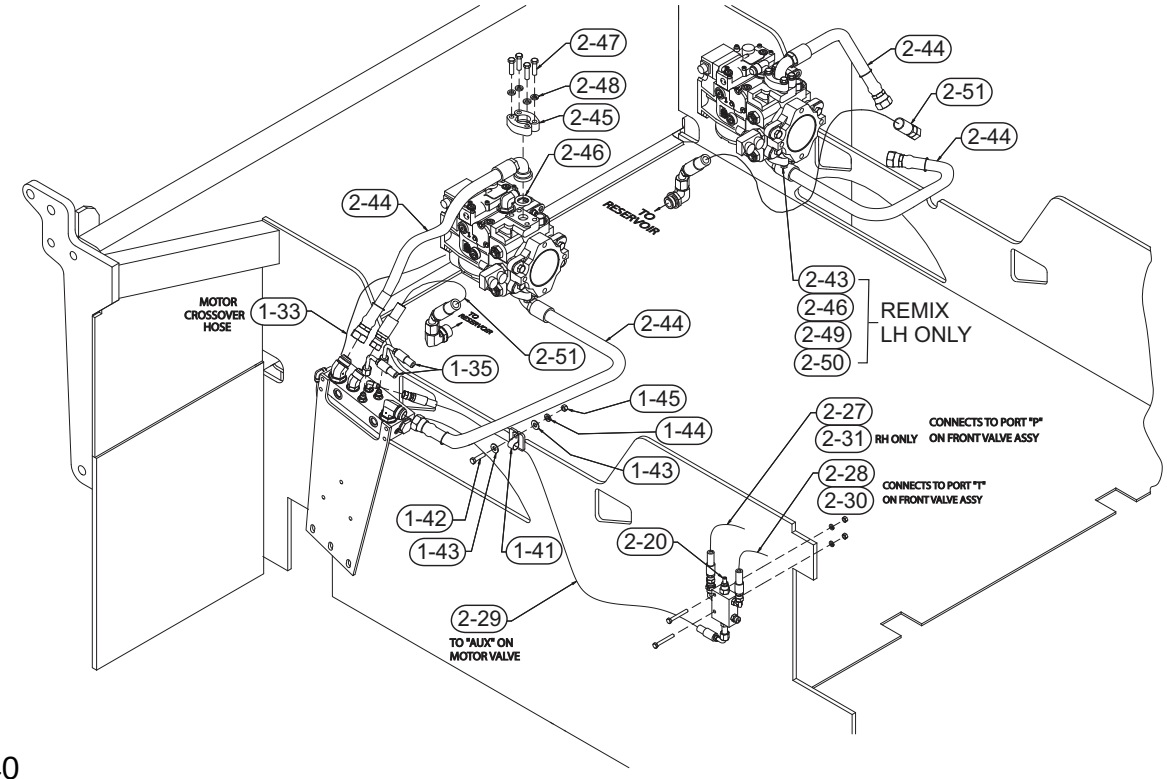

Return to Table of Contents Page

TEREX
CEDARAPIDS

Frame Raise Plumbing

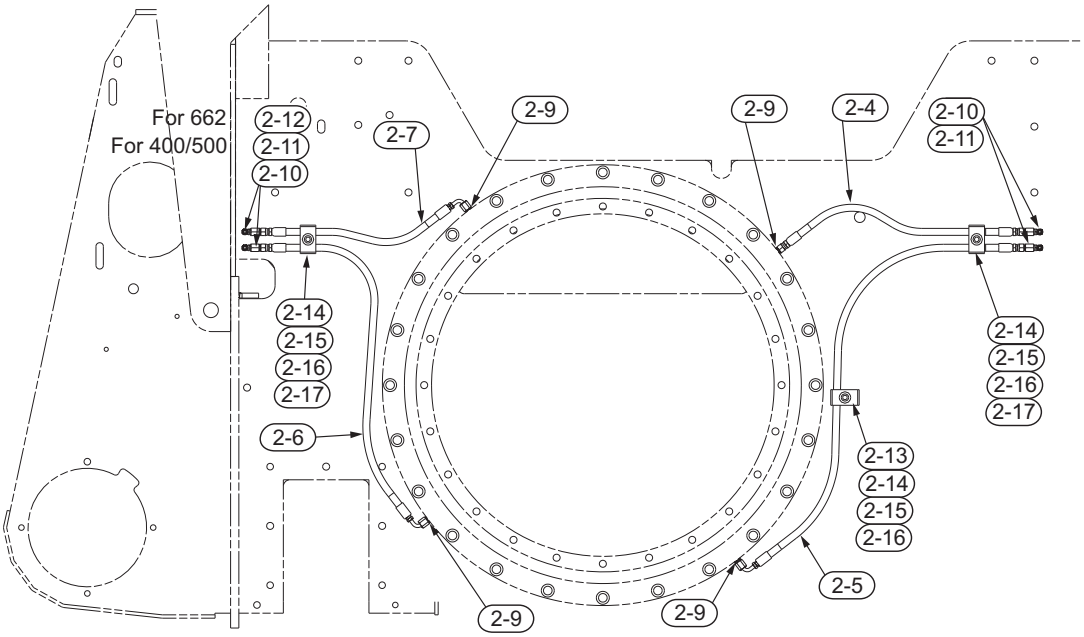

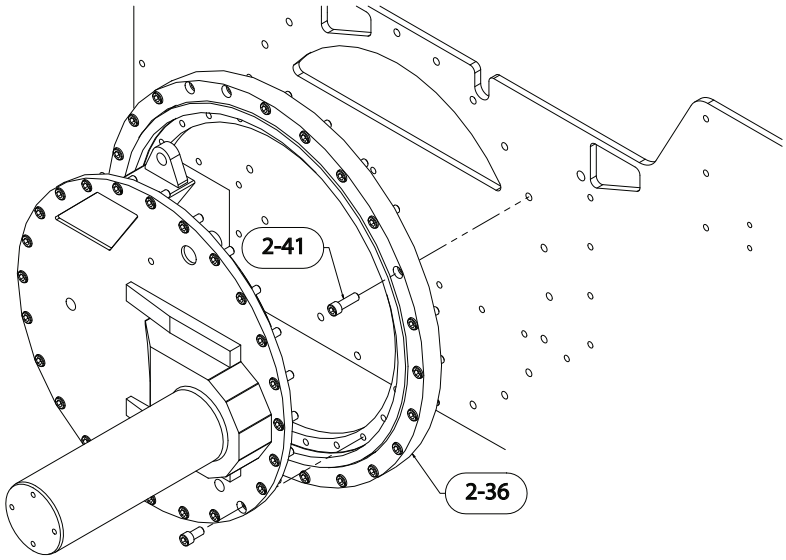

Return to Table of Contents Page

TEREX
CEDARAPIDS

Frame Raise Plumbing

Part List No. 05234RCD

Ref #	Part Number	REV	Part Name	Description	Qty
-	0970406451	A	ASSEMBLY DRAWING	FRAME RAISE PLUMBING	REF
-	0970406301	C	ASSEMBLY DRAWING	BEARING GREASE LINES	REF
107	07430253		CONNECTOR	3/4"SAE 3/8"JIC	2
111	0970465993	A	TUBE ASSY	RAISE	1
112	0970465994	A	TUBE ASSY	LOWER	1
113	0970466316	A	TUBE ASSY	FRONT RESERVOIR	4
115	07430344		TEE	3/8"JIC SWIVEL NUT	4
116	0970465996	B	TUBE ASSY	SHIFT	1
117	0970465997	C	TUBE ASSY	BRAKE	1
118	0766102333		HOSE ASSY	3/8" ID X 23"	4
120	4509000788	B	HYDRAULIC CYLINDER	3-1/2" BORE *(See Form 21715)*	2
122	07430276		ELBOW	#8MSAE X #6MJIC 90	4
125	0970466319		BRACKET	RESERVOIR BRACKET	2
126	07383038		CAPSCREW	3/8" NC X 1"	4
127	07014003		WASHER	3/8" LOCK	4
128	0970466004	A	TUBE ASSY	RH SHIFT	1
129	0970466005	A	TUBE ASSY	LH SHIFT	1
130	0970466006	A	TUBE ASSY	RH BRAKE	1
131	0970466007	A	TUBE ASSY	LH BRAKE	1
133	076601203301	-	HOSE ASSY	1/4"100R2 X120	1
135	0765102838	B	HOSE ASSY	3/8" ID X 28"	4
136	07430454	-	ELBOW	45DEG 3/8"JIC BLKHD	4
141	07509005		CLAMP	11/16"	2
142	07383039		CAPSCREW	3/8"NC X 1-1/4	2
143	07014018		WASHER	3/8"	4
144	07014003		WASHER	3/8" LOCK	2
145	07012025		HEX NUT	3/8" NC	2
147	4508052922	-	CLAMP HALF	FOR 3/8" TUBE	18
148	07014016		WASHER	1/4"	9
149	07014001		WASHER	1/4" LOCK	9
150	07383007		CAPSCREW	1/4"NC X 1-1/4"	9
204	0765002033	A	HOSE ASSY	1/4" ID X 20"	2
205	0765003835	A	HOSE ASSY	1/4" X 38"	2
206	0765003035	A	HOSE ASSY	1/4" X 30"	2
207	0765001735	A	HOSE ASSY	1/4" X 17"	2
209	07430001		CONNECTOR	1/8"NPT-1/4"JIC	8
210	07430008		CONNECTOR	1/8"NPT-1/4"JIC	8
211	07051004		FITTING	GREASE 1/8" 90DEG	8
213	4508052923	-	CLAMP HALF	FOR 1/2" TUBE	4
214	4508052926	-	PLATE	COVER FOR CLAMP	6
215	07014002		WASHER	5/16" LOCK	6
216	07383024		CAPSCREW	5/16"NC X 1-1/2	6
217	4508052924	-	CLAMP HALF	FOR 5/8" TUBE	8

CONTINUED

Return to Table of Contents Page

TEREX
CEDARAPIDS

Frame Raise Plumbing

Part List No. 05234RCD

Ref #	Part Number	REV	Part Name	Description	Qty
220	0970805038		SUB-ASSEMBLY	TRACK TENSION VALVE *(See Form 25027)*	2
227	076610363501	-	HOSE ASSY		2
228	0765103035	A	HOSE ASSY	3/8" ID X 30"	2
229	0766105238	-	HOSE ASSY	3/8 R2 AT X 52	2
230	07430253		CONNECTOR	3/4"SAE 3/8"JIC	2
231	07430255		CONNECTOR	#8MSAE X #8MJIC	1
236	0970805021		SUB-ASSEMBLY	ECCENTRIC BEARING *(See Form 25028)*	1
241	07025034		CAPSCREW	SCH 5/8NC X 2	46
244	076840383701	-	HOSE ASSY	1" 100R13 X 38"	4
245	4519100491	C	CLAMP	HALF 1"	8
246	4525950811	A	O RING	1.296"ID 1-9/16"OD	4
247	07383056		CAPSCREW	7/16"NC X1-3/4	16
248	07014004		WASHER	7/16" LOCK	16
251	0763302834	-	HOSE ASSY	3/4" ID X 28"	2

Return to Table of Contents Page

TEREX
CEDARAPIDS

Track Tension Valve Sub-Assembly

Part No. 0970805038

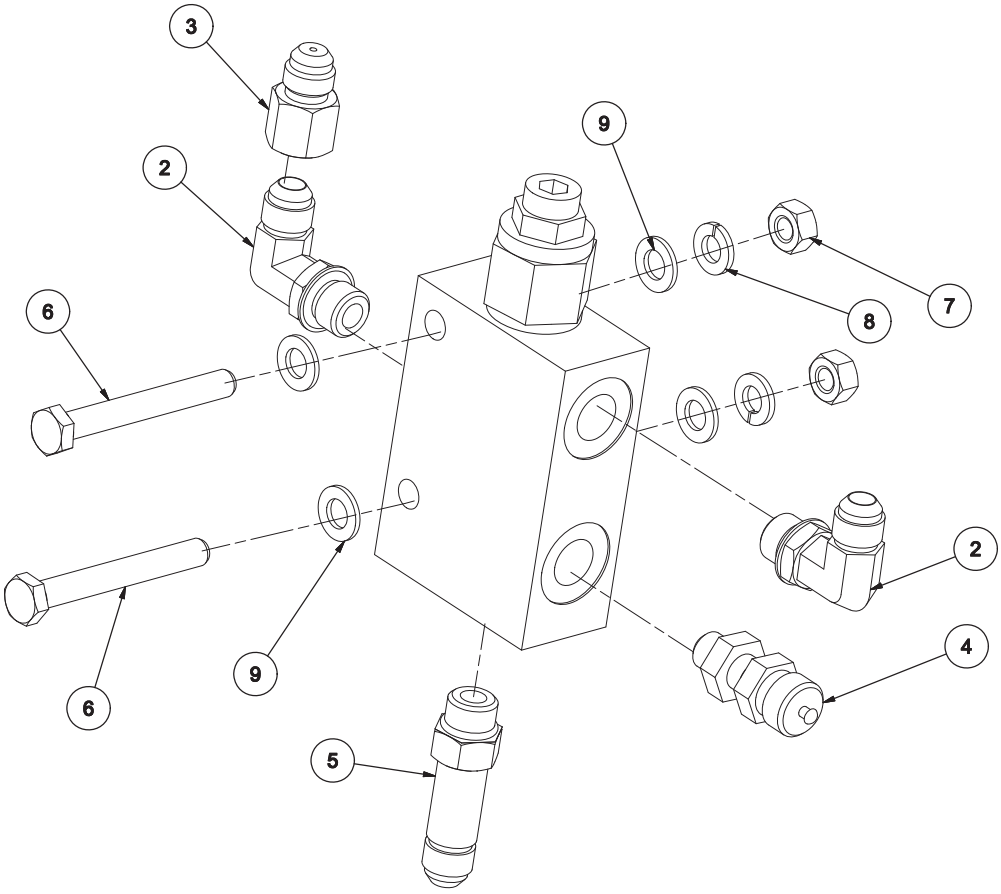

NOTE: Right Hand Assembly shown.
Left Hand Side equal & opposite.

Ref #	Part Number	REV	Part Name	Description	Qty
1	4525200967	A	VALVE	REDUCING	1
2	07430275		ELBOW	#6SAEM X #6JICM 90D	2
3	4525901203	A	FITTING	ORIFICE 5/64" DIA	1
4	4508052704	-	FITTING	SAE #4 PORT	1
5	4572077603	-	ADAPTER	3/8" SAE X 3/8" J	1
6	07383028		CAPSCREW	5/16"NC X 2-1/2	2
7	07012024		HEXNUT	5/16" NC	2
8	07014002		WASHER	5/16" LOCK	2
9	07014017		WASHER	5/16"	4

Return to Table of Contents Page

TEREX
CEDARAPIDS

Hydraulic Cylinder

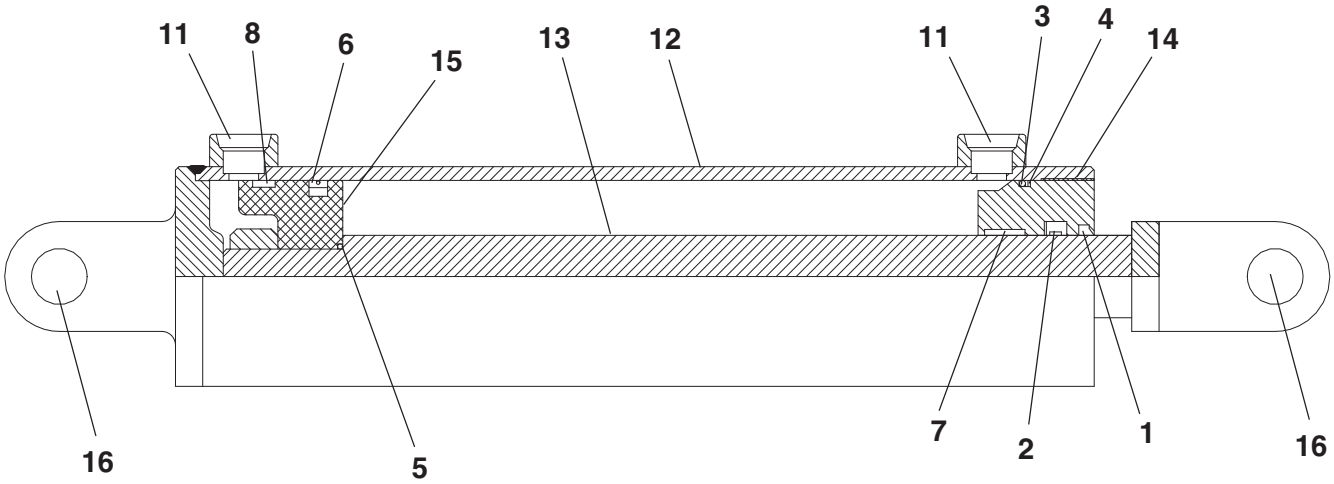

Ref. No.	Part Number	Description	Quantity
	45090-007-88	Cylinder - Complete	1
1	45090-007-88-01	Wiper	1
2	45090-007-88-02	Seal	1
3	45090-007-88-03	O-Ring	1
4	45090-007-88-04	Back-Up	1
5	45090-007-88-05	O-Ring	1
6	45090-007-88-06	Seal	1
7	45090-007-88-10	Wear Ring	1
8	45090-007-88-11	Wear Ring	1
9	45090-007-88-07	Locknut	1
10	45090-007-88-08	Cotter Pin	2
11	45090-007-88-09	Port Plug	2
12	45090-007-88-15	Tube Assembly	1
13	45090-007-88-16	Rod Assembly	1
14	45090-007-88-12	Head	1
15	45090-007-88-13	Piston	1
16	45090-007-88-14	Clevis Pin	2
17	45090-007-88-17	Seal Kit, Cylinder (Not Shown)	1

Return to Table of Contents Page

TEREX
CEDARAPIDS

Frame Raise Eccentric Sub-Assembly

Part Number 0970805021

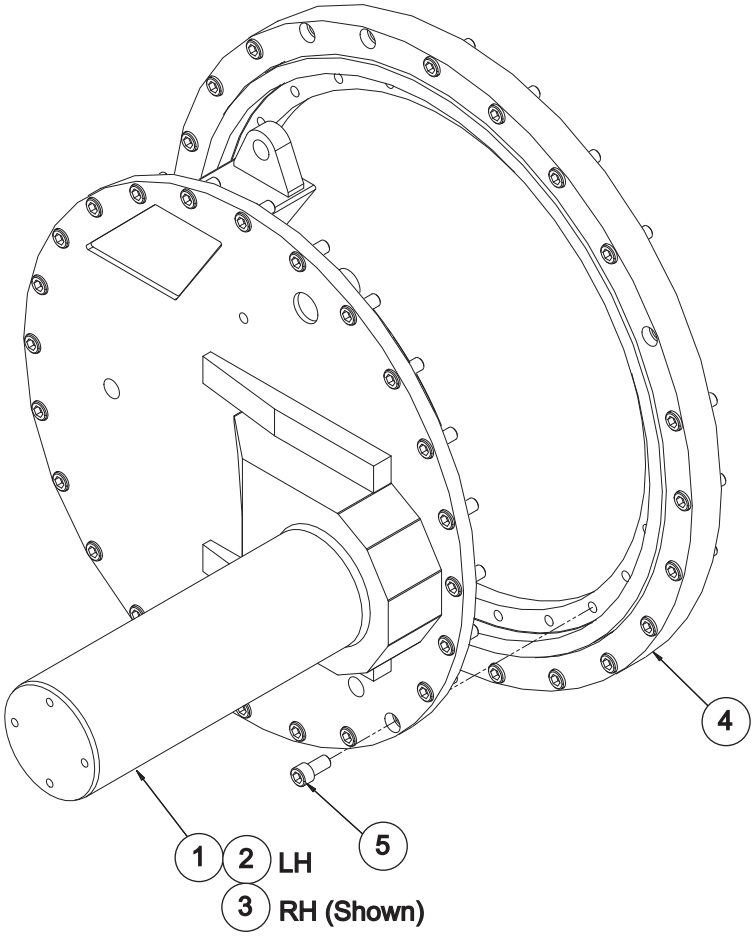

NOTE: Right Hand Assembly shown.
Left Hand Side equal & opposite.

Ref #	Part Number	REV	Part Name	Description	Qty
1	0970905018	-	KIT	CR462/562 ECCENTRIC	1
2	0970406179	A	ECCENTRIC	LH FRAME RAISE *(Not Shown)*	1
3	0970406180	A	ECCENTRIC	RH FRAME RAISE	1
4	4513400344	-	BEARING	PAVER FRAME RAISE	2
5	07025031		CAPSCREW	SCH5/8NCX1-1/4	48

TEREX
CEDARAPIDS

Rubber Track Frame

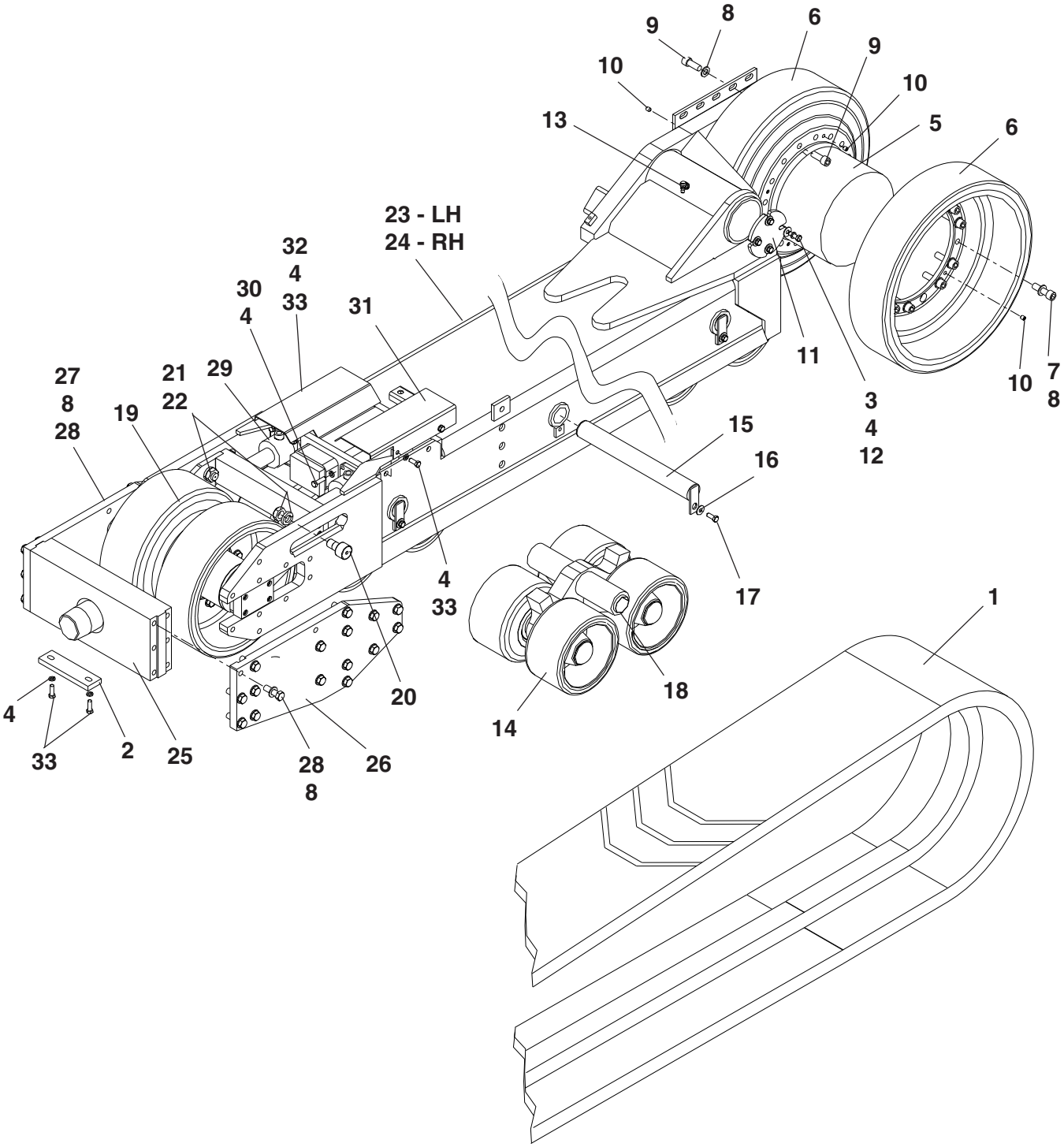

TEREX
CEDARAPIDS

Rubber Track Frame

Ref. No.	Part Number	Description	Quantity
1	45610-003-06	Track, Paver	2
2	9704-012-28	Plate, Keeper	2
3	7383-070	Capscrew, 1/2" NC x 1-1/2"	8
4	7014-005	Lockwasher, 1/2"	36
5	45080-006-29	Hydraulic Motor - *(See Form 22256)*	2
6	9704-061-28	Drive Wheel, 18" Rubber Track	4
7	45890-300-85	Capscrew, M20 x 70 - Sockethead	28
8	7465-003	Washer, 3/4" - Hardened Flat	132
9	45890-300-29	Capscrew, M20 x 50 - Sockethead	44
10	7131-101	Set Screw, 1/2" NC x 5/8"	24
11	9704-059-69	Plate, Shaft End	2
12	7014-020	Washer, 1/2"	8
13	7051-010	Fitting, Grease 1/4" 90°	2
14	9704-061-34	Bogie Assembly - *(See Form 21815)*	8
15	9704-062-64	Shaft, Roller Frame	8
16	9700-459	Washer	8
17	7383-068	Capscrew, 1/2" NC x 1"	8
18	45030-003-49	Bushing, 2-7/16" ID	8
19	9708-050-31	Idler Assembly - *(See Form 24648-24649)*	2
20	45134-003-31	Cam Roller	4
21	7014-012	Lockwasher, 1-1/8"	4
22	7017-055	Hex Nut 1-1/8" NF Jam	4
23	9704-063-89	Track Frame, Left Hand	1
24	9704-063-90	Track Frame, Right Hand	1
25	9704-061-44	Plate, Nose	2
26	9704-061-45	Plate, Nose - Left Hand	2
27	9704-061-46	Plate, Nose - Right Hand	2
28	7383-120	Capscrew, 3/4" NC x 2-1/2"	64
29	45090-010-09	Hydraulic Cylinder - *(See Form 21817)*	4
30	7383-071	Capscrew, 1/2" NC x 1-3/4"	16
31	9704-061-21	Cover, L.H. Cylinder	2
32	9704-061-22	Cover, R.H. Cylinder	2
33	7383-069	Capscrew, 1/2" NC x 1-1/4"	12

Note: Major components are included in Kit Part Number: 09709-050-03 and Sub-assembly Part Number: 09708-050-34.

TEREX
CEDARAPIDS

Rubber Track Bogie

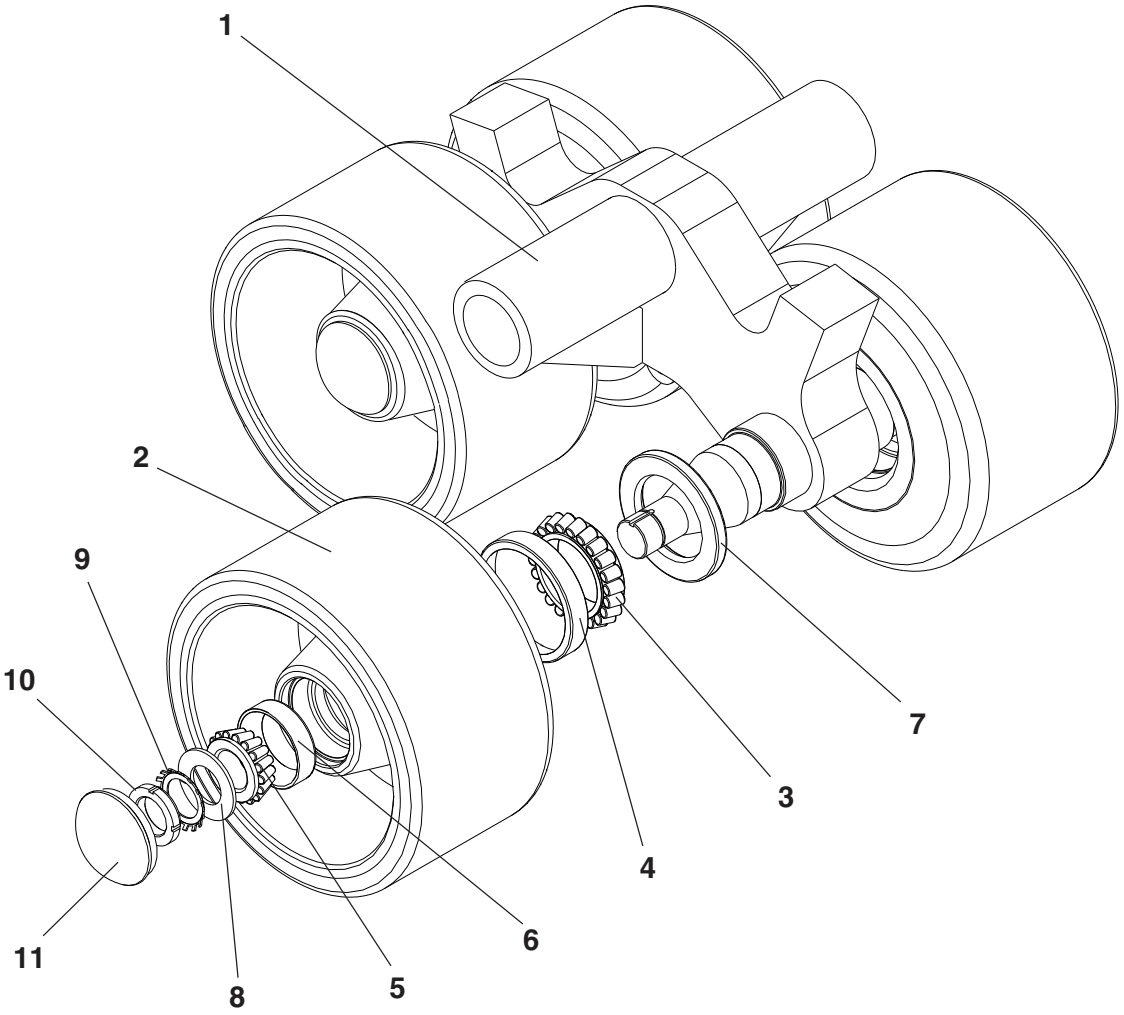

Ref. No.	Part Number	Description	Quantity
	9704-061-34	Bogie Assembly *(complete)*	1
1	9704-061-29	Bogie, 18" Rubber Track	1
2	9704-061-26	Bogie Wheel, 18" Rubber Track	4
3	45130-001-33	Bearing Cone	4
4	45130-002-81	Bearing Cup, 4.3307 OD .7411	4
5	45130-001-94	Bearing Cone, 1.375" Bore	4
6	45130-002-67	Bearing Cup, 2.8437" OD	4
7	45200-292	Seal, Shaft - 2.938" Dia.	4
8	45130-500-15	Washer, Tongued - 1.376" Dia.	4
9	45130-500-14	Washer, Lock Bearing 1.375"	4
10	7030-008	Bearing Nut	4
11	45404-501-05	Hubcap, Grease Cap / Wheel Hub	4

NOTE: Quantities shown are for one (1) Bogie assembly only.

TEREX
CEDARAPIDS

Take-Up Idler - Assembly

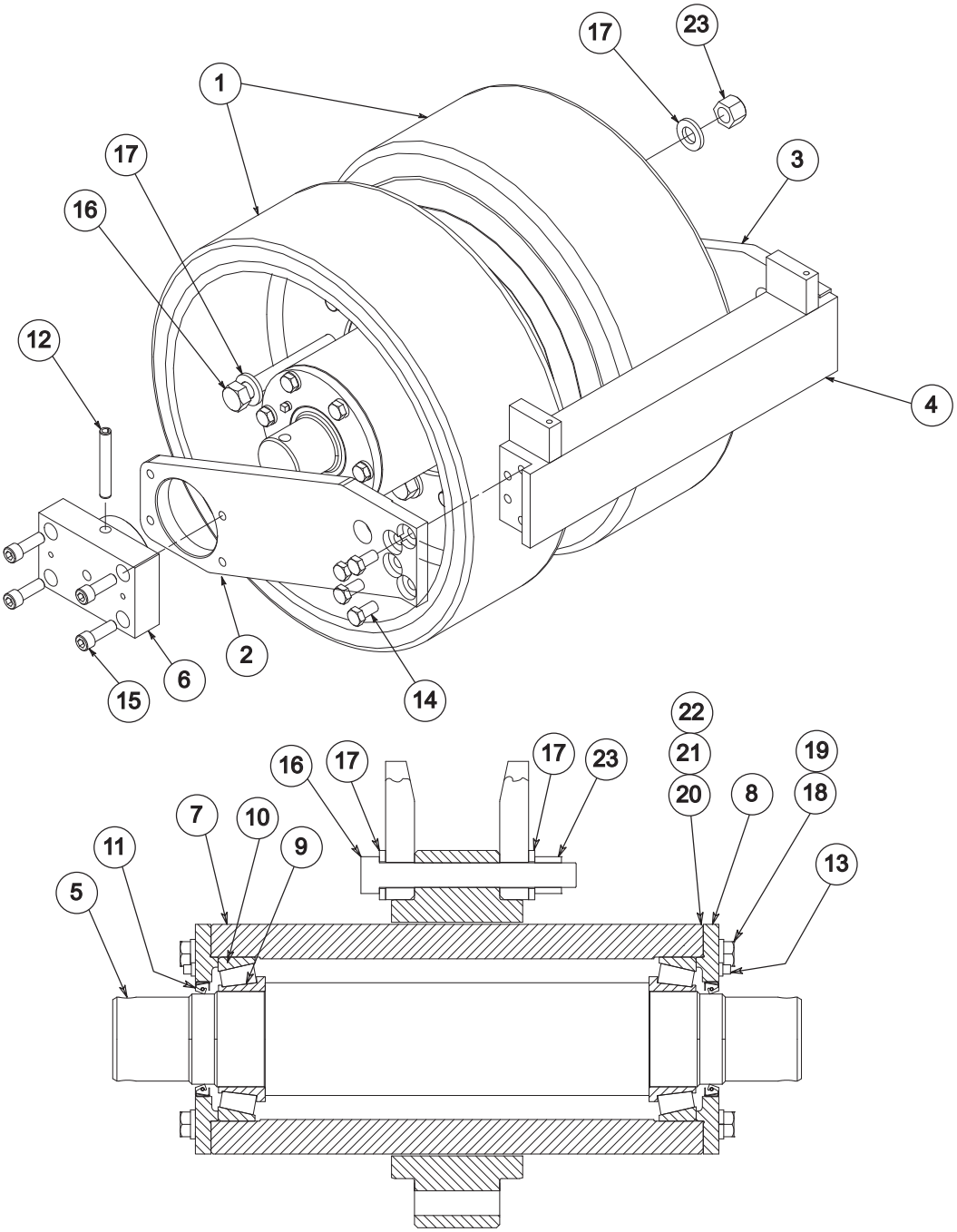

TEREX
CEDARAPIDS

Take-Up Idler - Assembly

Part No. 0970805031

Ref #	Part Number	REV	Part Name	Description	Qty
1	0970406127	-	IDLER WHEEL	18" RUBBER TRACK	2
2	*0970406472		PLATE	L.H. IDLER TAKE UP	1
3	*0970406473		PLATE	R.H. IDLER TAKE UP	1
4	*0970406471		PUSH BAR	IDLER TAKE UP	1
5	*0970406138	B	SHAFT	IDLER SHAFT	1
6	*0443178601		SLIDER	IDLER BLOCK	2
7	*0970406276	B	HOUSING	IDLER	1
8	*0970405604	B	CAP	BEARING COVER	2
9	07132010		BEARING CONE		2
10	07132001		BEARING CUP		2
11	45200046	D	OIL SEAL		2
12	07238158		ROLL PIN		2
13	07024001		PIPE PLUG	1/8"	2
14	07383068		CAPSCREW	1/2" NC X 1"	8
15	07025022		CAPSCREW	SCH1/2NCX1-1/2	8
16	4589025233	A	CAPSCREW	HIGH STRENGTH	8
17	4589025551	A	WASHER	3/4" HARDENED FLAT	16
18	07383069		CAPSCREW	1/2"NC X 1-1/4"	12
19	07014005		WASHER	1/2" LOCK	12
20	07048053		BEARING SHIM		2
21	07048054		BEARING SHIM		3
22	07048052		BEARING SHIM		1
23	4589010052	-	LOCKNUT	HIGH STRENGTH	8

NOTE: Quantities shown are for one (1) idler assembly only.

**Items 2-8 may be purchased as a Kit P/N 0970905034*

TEREX
CEDARAPIDS

Cylinder - Rubber Track

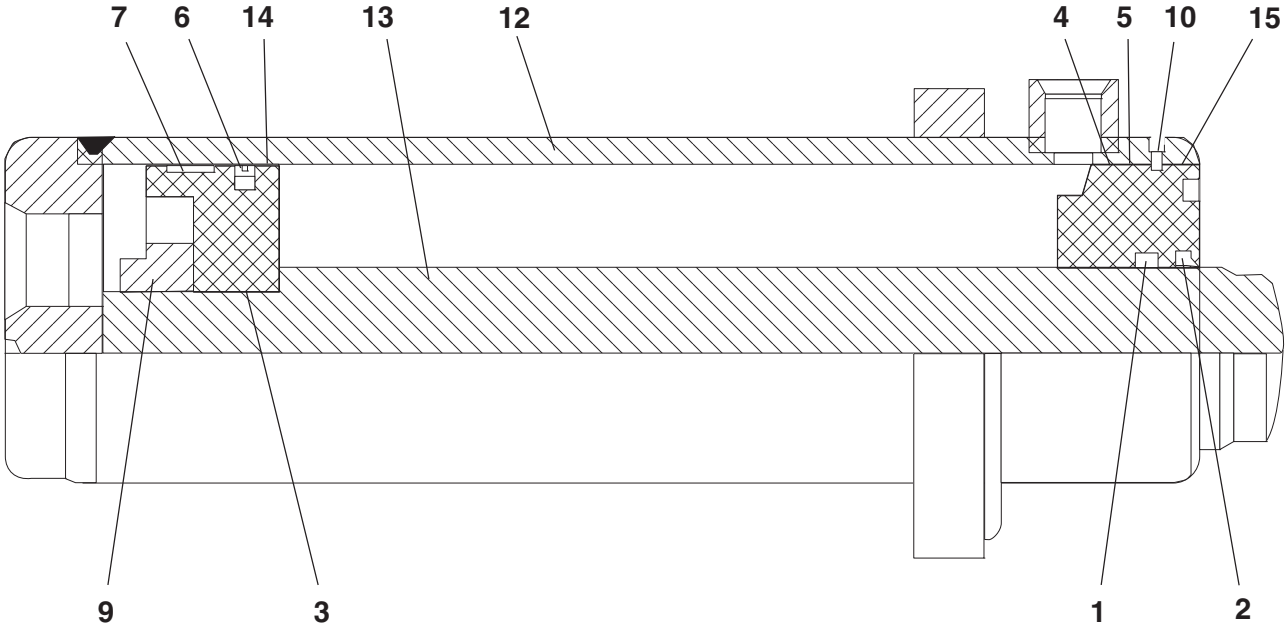

Ref. No.	Part Number	Description	Quantity
	45090-010-09	Cylinder Assembly *(complete)*	1
1	45090-010-09-01	Wiper	1
2	45090-010-02	Seal	1
3	45090-010-03	O-Ring	1
4	45090-007-88-03	O-Ring	1
5	45090-007-88-04	Back-Up	1
6	45090-010-09-04	Seal	1
7	45090-010-09-05	Wear Ring	1
8	45090-010-09-06	Seal Kit (Not Shown)	1
9	45090-010-09-07	Lock Nut	1
10	45090-010-09-08	Retaining Ring	1
11	45090-007-88-09	Port Plug (Shipping Purposes Only)	2
12	45090-010-09-09	Tube Assembly	1
13	45090-010-09-10	Rod	1
14	45090-010-09-11	Piston	1
15	45090-010-09-12	Head	1

NOTE: Quantities Listed for one (1) Cylinder Assembly Only:

TEREX
CEDARAPIDS

Track Frame Scrapers

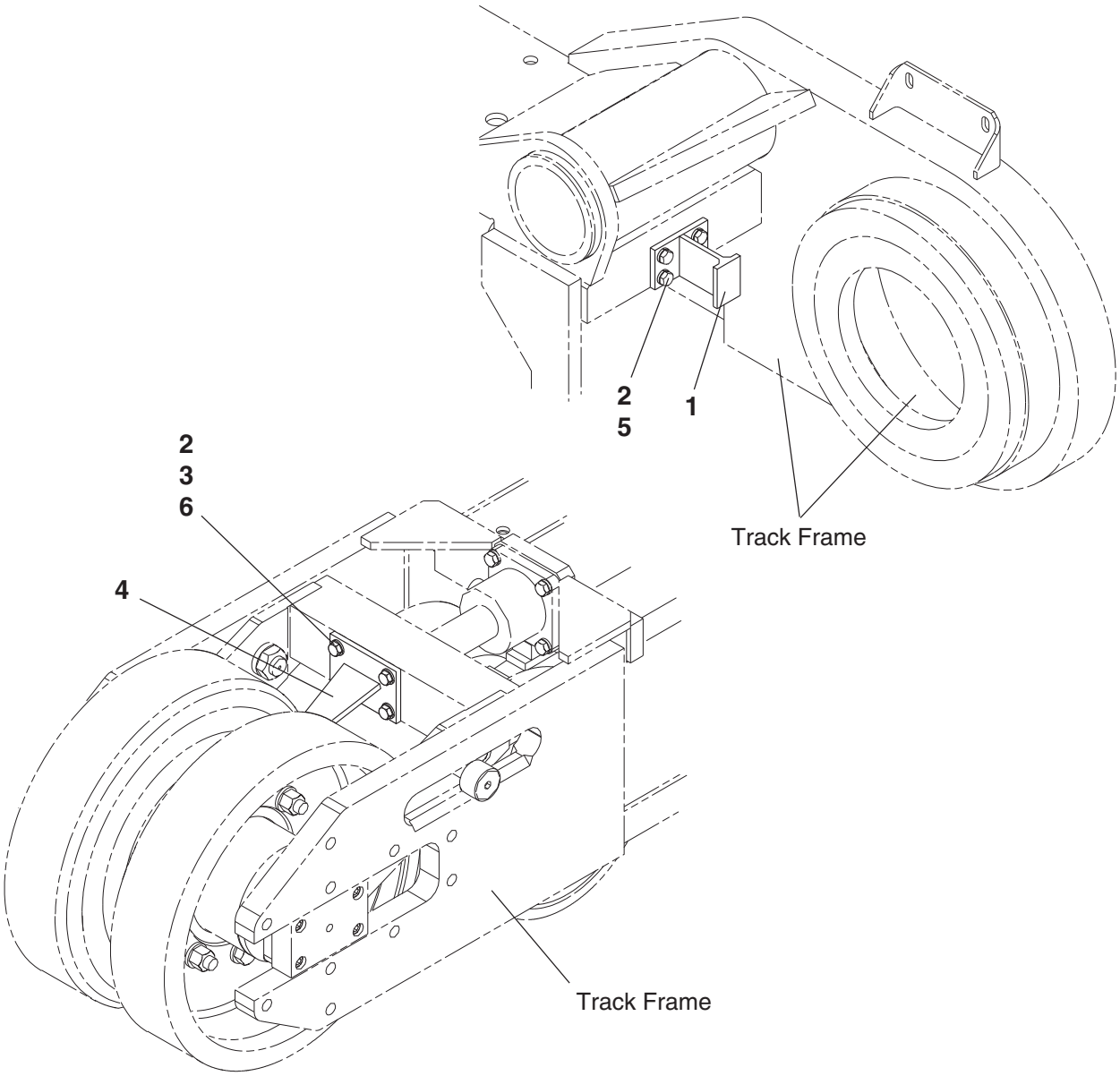

Ref. No.	Part Number	Description	Quantity
1	9704-063-60	Weldment, Rear Scraper	2
2	7465-002	Washer, 5/8" Hardened Flat	4
3	7383-099	Capscrew, 5/8" NC x 1-1/4"	8
4	9704-063-64	Weldment, Front Scraper	2
5	7465-002	Washer, 5/8" Hardened Flat	8
6	7383-099	Capscrew, 5/8" NC x 1-1/4"	8

TEREX
CEDARAPIDS

Hydraulic Motor - Rubber Track

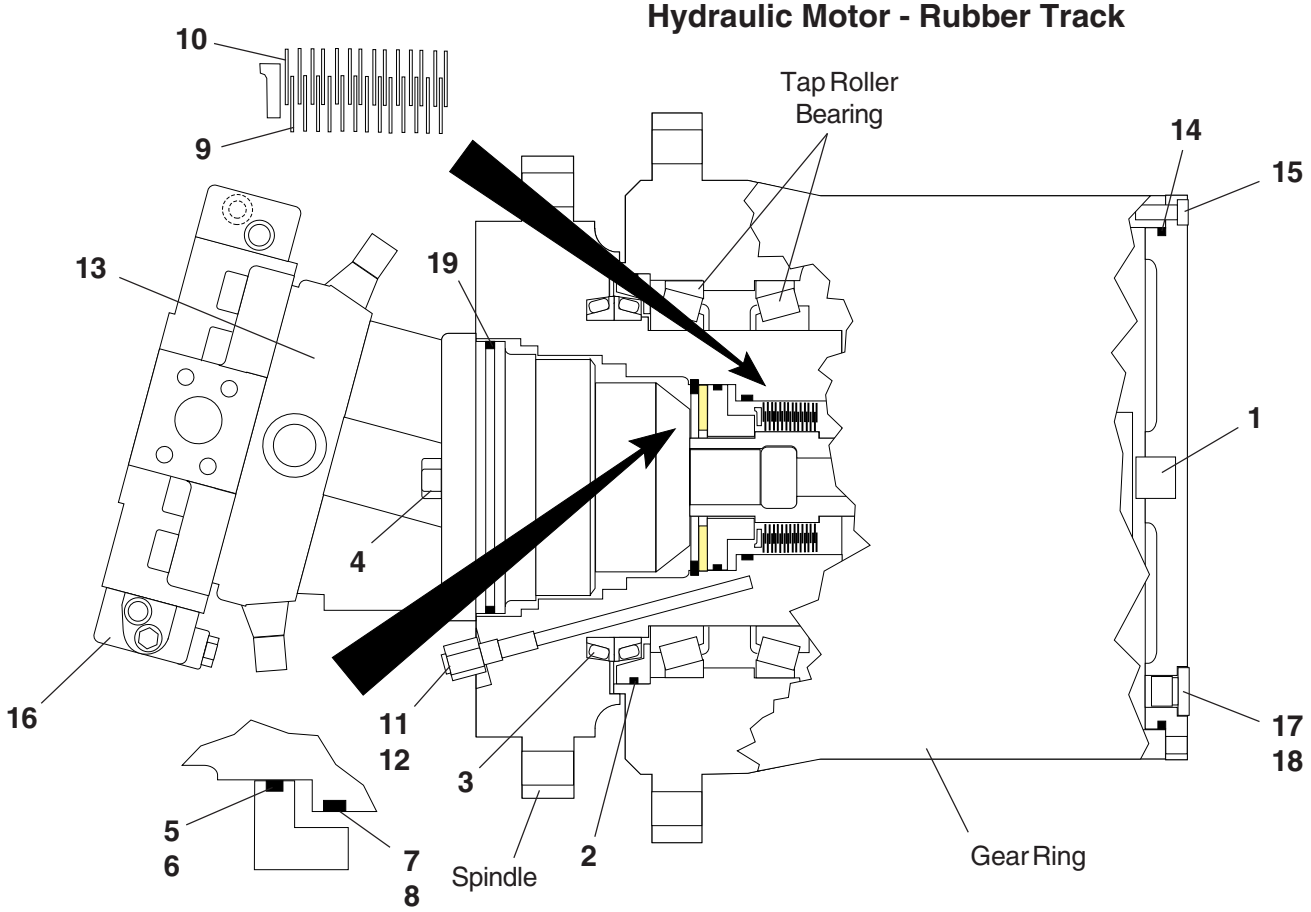

Ref. No.	Part Number	Description	Quantity
	45080-006-29	Hydraulic Motor - Complete	1
1	45080-006-20-08	Button, Thrust	1
2	45080-006-20-04	O-Ring	1
3	45080-006-20-01	Seal, Face	1
4	45080-006-20-03	Bolt, Hex Head	2
	45080-006-23-09	Brake Seal Kit	1
5	Consult Factory	Seal, Piston	As Req
6	Consult Factory	Ring, Back Up	As Req
7	Consult Factory	Seal, Piston	As Req
8	Consult Factory	Ring, Back Up	As Req
	45080-006-23-03	Brake Disk Kit	1
9	Consult Factory	Disk, Inner	As Req
10	Consult Factory	Disk, Outer	As Req
11	45720-776-08	Adapter, Brake	1
12	5220-750-45	Ring, Seal	1
13	45080-006-29-01	Motor, Hydraulic	1
14	45080-006-20-10	O-Ring	1
15	45080-006-20-11	Bolt, Hex Head	12
16	Consult Factory	Valve, Flushing	1
17	45080-004-79-06	Plug, Screw	2
18	45080-004-79-05	Ring, Seal	2
19	45080-006-20-05	O-Ring	1
20	45080-006-29-05	Seal, Hydraulic Motor Shaft *(Not Shown)*	1

NOTE: Quantities shown are for (1) one motor assembly.

TEREX
CEDARAPIDS

Rubber Track Plumbing

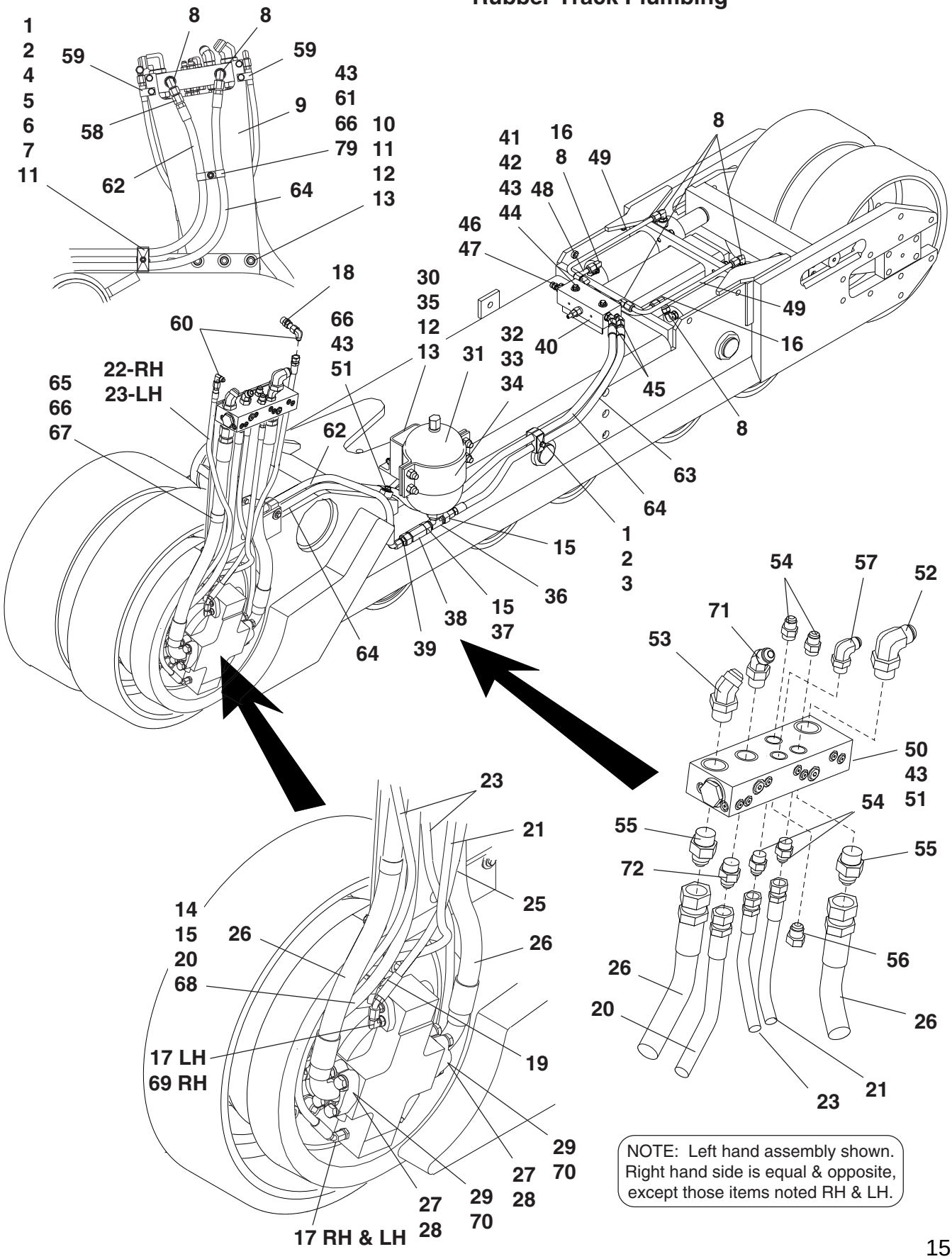

NOTE: Left hand assembly shown. Right hand side is equal & opposite, except those items noted RH & LH.

TEREX
CEDARAPIDS

Rubber Track Plumbing

Ref. No.	Part Number	Description	Quantity
1	45080-529-36	Clamp, Half 7/8" ID Twin	12
2	45080-529-27	Plate, Cover for Clamp	6
3	7383-025	Capscrew, 5/16" NC x 1-3/4"	4
4	7383-029	Capscrew, 5/16" NC x 2-3/4"	2
5	7014-002	Lockwasher, 5/16"	2
6	7012-024	Hex Nut, 5/16" NC	2
7	7014-017	Washer, 5/16"	2
8	7430-278	Elbow, 90° 3/4" x 1/2" - With #73 O-Ring	20
9	9704-062-09	Mount, Valve	2
10	7072-102	Carriage Bolt, 1/2" NC x 1-1/2"	6
11	7014-020	Washer, 1/2"	8
12	7014-005	Washer, 1/2" Lock	10
13	7012-027	Hex Nut, 1/2" NC	10
14	45720-776-44	Fitting, 3/4" x M26 x 1.5	2
15	7430-330	Reducer, 3/4" to 1/2"	6
16	7430-405	Elbow, 90° 1/2" Swivel	4
17	45720-776-10	Elbow, M14 x 1.5 to 3/8"	5
18	45080-527-18	Fitting, Test 3/8" Male	2
19	7430-416	Connector, 7/16" x 3/8" - With #74 O-Ring	2
20	7652-030-34	Hose Assembly	2**
21	7660-032-34-01	Hose Assembly	2**
22	7660-047-34-01	Hose Assembly	1**
23	7660-042-34-01	Hose Assembly	3**
24	7660-029-35-01	Hose Assembly	1**
25	7660-032-34-01	Hose Assembly	1**
26	7684-031-37-51	Hose Assembly	4**
27	45259-508-67	O-Ring, 1.484" ID	4
28	45890-303-27	Capscrew, Hex Head M14 x 50	16
29	7014-006	Washer, 9/16" Lock	16
30	9704-062-11	Mount, Accumulator	2
31	45085-502-09	Accumulator, 1 Gal.	2
32	02-360-321-0001	Bracket, 1 Gal. Accumulator	2
33	7383-102	Capscrew, 5/8" NC x 2"	8
34	7386-007	Hex Nut, 5/8" NC Lock	8
35	7383-070	Capscrew, 1/2" NC x 1-1/2"	4
36	7430-305	Tee, 1-1/16" Branch - With #75 O-Ring	2
37	45259-508-14	O-Ring, 3/4"	2
38	45252-010-31	Valve	2
39	7430-255	Connector, 3/4" x 1/2" - With #73 O-Ring	2
40	9704-061-97	Valve, Track Tension	2
41	9704-061-88	Flat	2
42	7383-046	Capscrew, 3/8" NC x 3"	4
43	7014-003	Washer, 3/8" Lock	20
44	7014-018	Washer, 3/8"	4
45	7430-314	Elbow, 45° 3/4" x 1/2" - With #73 O-Ring	4

- Continued on Next Page -

TEREX
CEDARAPIDS

Rubber Track Plumbing

Ref. No.	Part Number	Description	Quantity
46	45720-776-04	Adapter, #8 x #4	4
47	45080-527-04	Fitting, #4 Port	4
48	9704-061-89	Tube Assembly	4
49	9704-061-90	Tube Assembly	4
50	9704-063-08	Take-Up Valve - Complete	2
	9704-063-08-01	Block, Valve	1*
	45252-008-24	Valve	2*
	45720-776-47	Plug, #2	10*
	45720-770-14	Plug, #6	2*
51	7383-037	Capscrew, 3/8" NC x 7/8"	10
52	7430-285	Elbow, 90° 1-5/16" x 1" - With #76 O-Ring	2
53	7430-320	Elbow, 45° 1-5/16" x 1" - With #76 O-Ring	2
54	7430-252	Connector, 9/16" x 3/8" - With #77 O-Ring	8
55	7430-267	Connector, 1-5/16" x 1" - With #76 O-Ring	4
56	7430-381	Plug, 9/16" - With #77 O-Ring	2
57	7430-275	Elbow, 90° 9/16" x 3/8" - With #77 O-Ring	2
58	45259-012-05	Fitting, 3/32" Orifice	2
59	7509-004	Hose Clamp 5/8"	4
60	7430-420	Elbow, 3/8" Union	4
61	7383-039	Capscrew, 3/8" NC x 1-1/2"	2
62	7662-050-35	Hose Assembly	2**
63	7662-057-33	Hose Assembly	2**
64	7662-111-33	Hose Assembly	2**
65	7509-012	Hose Clamp, 1-1/2"	4
66	7509-007	Clamp, 13/16"	6
67	7383-038	Capscrew, 3/8" NC x 1"	4
68	7430-387	Elbow, 90° 3/4" Swivel Nut	2
69	45720-775-49	Fitting, M14 x 1.5 to 3/8" (Right Hand Side Only)	1
70	45191-004-92	Half, 1-1/4" Clamp	8
71	7430-317	Elbow, 45° 7/8" x 3/4" - With #78 O-Ring	2
72	7430-256	Connector, 7/8" x 1/2" - With #78 O-Ring	2
73	45259-508-14	O-Ring, 3/4" (For hydraulic fittings)	As Req
74	45259-508-12	O-Ring, 7/16" (For hydraulic fittings)	As Req
75	45259-508-15	O-Ring, 1-1/16" (For hydraulic fittings)	As Req
76	45259-508-17	O-Ring, 1-5/16" (For hydraulic fittings)	As Req
77	45259-508-13	O-Ring, 9/16" (For hydraulic fittings)	As Req
78	45259-508-71	O-Ring, 7/8" (For hydraulic fittings)	As Req
79	7012-025	Hex Nut, 3/8" NC	6

*NOTE: Quantities listed for breakdown under Item No. 50 are for *one* (1) Take-Up Valve *only*.

**NOTE: Hose assemblies noted are available together in Kit Part Number 09709-050-26.

TEREX
CEDARAPIDS

De-Tracking Limit Switch

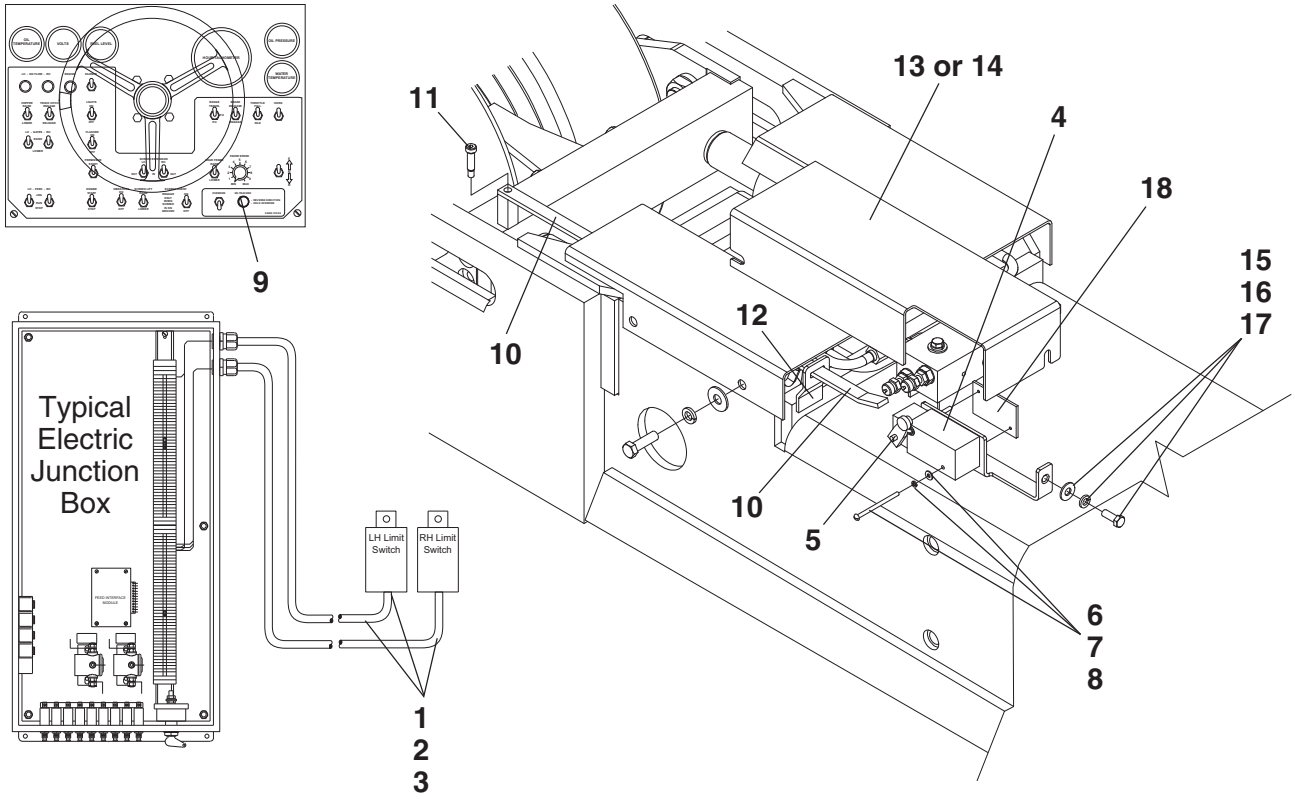

Ref. No.	Part Number	Description	Quantity
-	9704-376-51	Limit Switch Assembly - Right Hand	1
-	9704-376-53	Limit Switch Assembly - Left Hand	1
1	56020-002-01	Cable, 16/3	As Req
2	46026-035-15	Connector, 3/4" Size Hub	2
3	46275-010-31	Connector, 3 Way Shroud	2
4	46200-001-29	Switch, Limit	2
5	46200-505-03	Arm, Lever	2
6	7436-109	Machine Screw, #10 x 3"	4
7	7439-028	Washer, #10 Flat	4
8	7439-003	Lockwasher, #10	4
9	Reference Only	See Control Console Parts Page in this manual	-
10	9704-064-09	Pointer, Limit Switch	2
11	7455-012	Shoulder Screw, 3/8" x 5/8"	2
12	Reference Only	Pointer Guide - Part of Track Frame Weldment	-
13	9704-064-15	Guard, Limit Switch - Left Side	1
14	9704-064-16	Guard, Limit Switch - Right Side	1
15	7383-038	Capscrew, 3/8" x 1"	2
16	7014-018	Washer, 3/8" Flat	2
17	7014-003	Lockwasher, 3/8"	2
18	9704-064-12	Clamp, Limit Switch	2