REX CONSOLIDATED

Truck and Trailer Parts





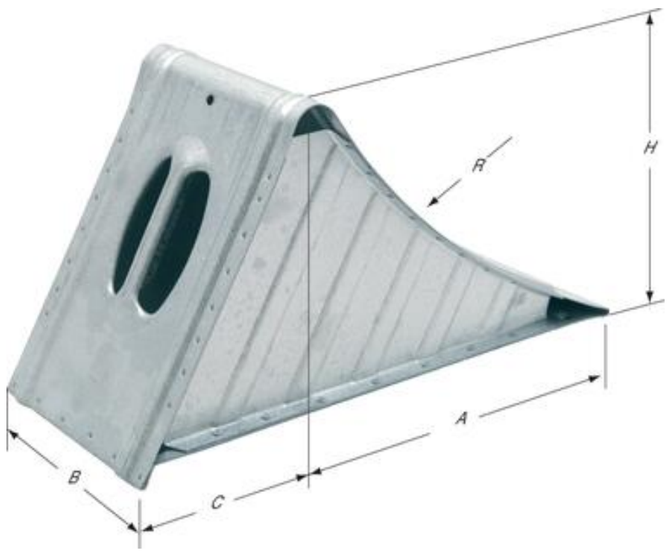

ABOUT US

Established in 1978, Rex Consolidated is an Indian manufacturer and global supplier of automotive, commercial-vehicle and industrial components. Through our specialised product divisions, we support OEMs, aftermarket distributors, wholesalers, fleet operators and industrial customers in more than 70 countries.

Rex Consolidated offers a growing range of universal accessories for commercial vehicles, trucks, trailers, fleets, workshops, and aftermarket applications. Our product range includes O-rings, rubber belts, wheel wedges in rubber and metal, budget locks, rubber buffers, and OE-replacement fasteners.
Designed for dependable performance in demanding operating conditions, these products support vehicle maintenance, safety, sealing, power transmission, load security, and component replacement. We offer standard products as well as customised sizes, materials, finishes, and packaging to meet specific customer and market requirements.

Product Range:
✔️ O-rings for reliable sealing across various vehicle systems
✔️ V-belts, cogged belts, and multi-ribbed rubber belts
✔️ Rubber and metal wheel wedges for vehicle safety
✔️ Budget locks for commercial-vehicle bodywork and compartments
✔️ Rubber buffers for impact absorption and vibration reduction
✔️ OE-replacement fasteners for vehicle maintenance and repair

WHEEL STOPPER WEDGE (METAL) - TIRE CHOCK DIN 76051

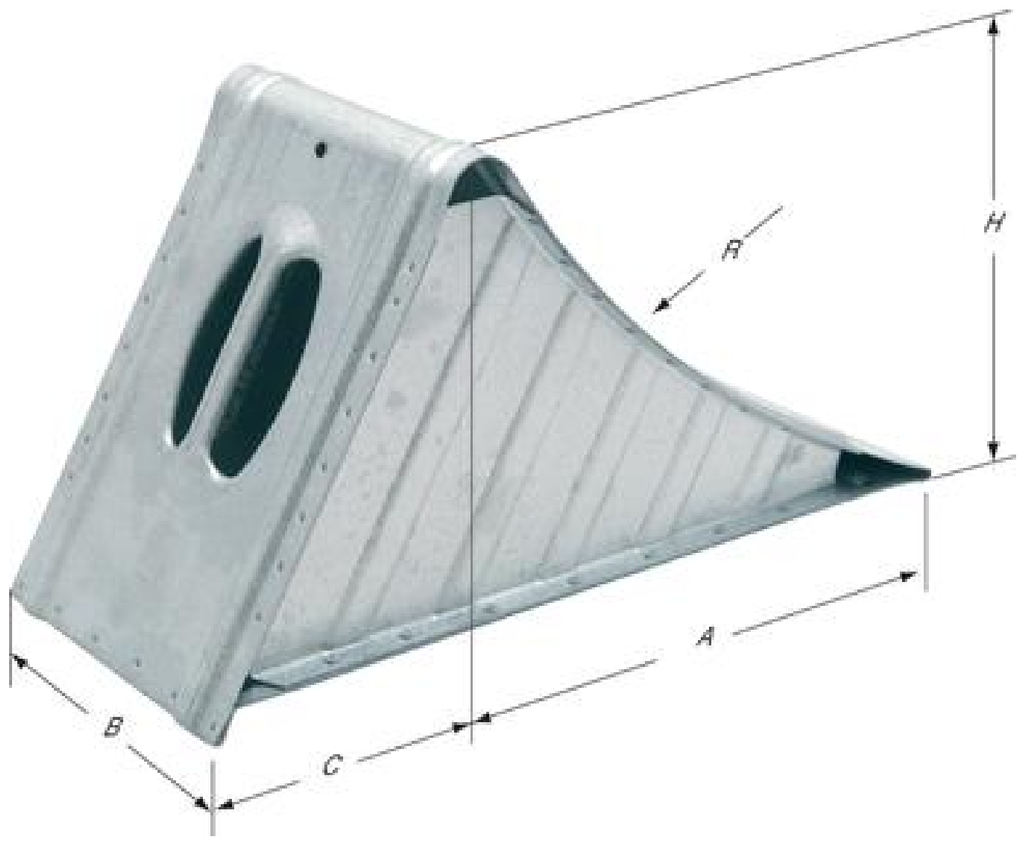

Steel Wheel Chock – Heavy Load Series

Built from high-strength steel or aluminum, this wheel chock offers lightweight durability for heavy-duty vehicle support.

Its grooved surface ensures firm traction, while the wide base provides enhanced stability on various surfaces.

Integrated handholds make positioning and removal quick and easy.

Perfect for trucks, trailers, and commercial fleet safety—only from Rex Consolidated.

WHEEL STOPPER WEDGE (RUBBER)



Heavy-Duty Rubber Wheel Chock

Engineered for maximum safety, this durable rubber wheel chock prevents accidental vehicle or trailer movement during loading, servicing, or parking.

The ribbed surface provides superior grip, while the built-in steel eyelet ensures easy handling and secure placement.

Ideal for industrial, commercial, and transport applications.

A trusted safety solution from Rex Consolidated's Rubber Tech range.

Rubber Buffers & Stoppers



At Rex Consolidated, we manufacture high-performance rubber buffers designed to absorb impact, reduce vibration, and enhance durability in truck and trailer applications. Engineered from premium-grade rubber compounds, our buffers provide exceptional resistance to wear, weather, and load stress. Whether used in suspension systems, chassis protection, or body mounting, Rex rubber buffers ensure smoother operation, longer component life, and reliable performance even under demanding road conditions.

Budget Locks



Budget Locks provide a simple, reliable, and cost-effective locking solution for access panels, cabinets, enclosures, and industrial compartments. Manufactured from durable zinc-plated steel, they offer secure operation, easy installation, and dependable performance across a wide range of industrial and commercial applications.

O-rings and Rubber belts for CVs

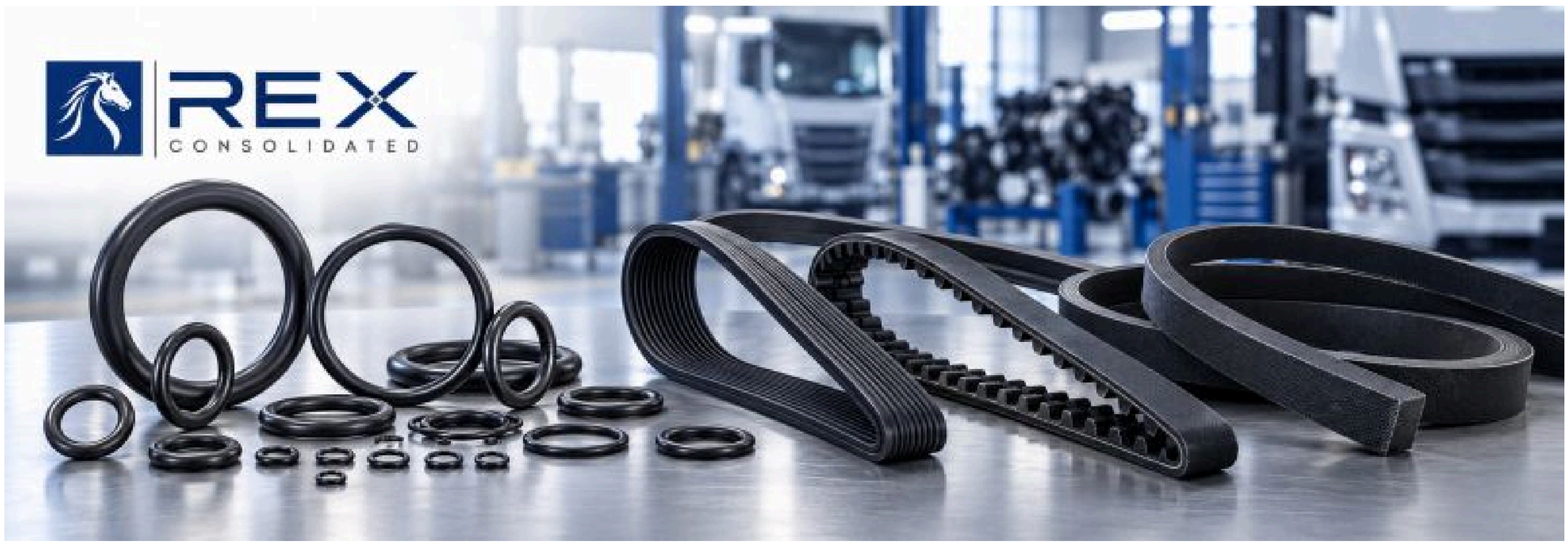

Rex Consolidated manufactures high-quality O-rings and rubber belts engineered for commercial vehicles, automotive systems, and heavy-duty industrial applications. Our O-rings provide dependable sealing against oils, fuels, air, water, chemicals, pressure, and temperature variations.

Our range of rubber belts includes V-belts, cogged belts, and multi-ribbed belts designed for efficient power transmission, reduced slippage, and dependable performance under demanding operating conditions. Manufactured using carefully selected elastomer compounds and reinforced materials, these components offer excellent flexibility, wear resistance, dimensional stability, and long service life.

Products can be developed in customised materials, profiles, dimensions, and performance grades based on customer drawings, samples, or specific application requirements.

DIN 5401 Ball Suitable for Volvo 205

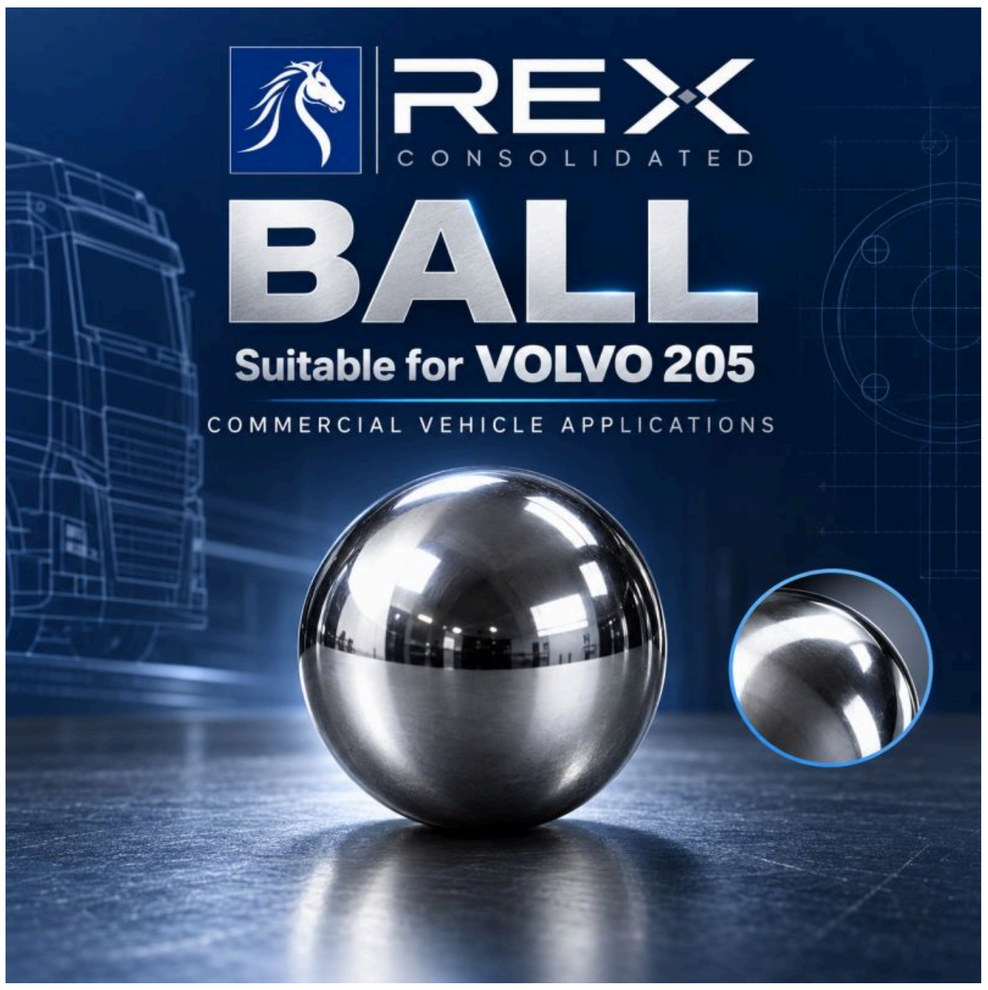

These protective profiles are designed for installation between the tank, mounting strap and support bracket. They help reduce direct metal-to-metal contact, vibration and surface damage. Kits can be supplied separately or fitted to the corresponding clamp assembly when specified with the order.

Fasteners for Commercial Vehicles



Rex Consolidated supplies a comprehensive range of fastening solutions for trucks, trailers, buses and other commercial vehicles. Our product range includes bolts, screws, nuts, flat and spring washers, lock rings, circlips, cotter pins and other application-specific fastening components.

Products are available in different materials, strength grades, dimensions, thread types and surface finishes to meet demanding requirements for load capacity, vibration resistance, corrosion protection and long service life.

We can supply fasteners according to international standards or develop customised components from technical drawings, physical samples, OEM references and application requirements.

Product Range

- Bolts and screws
- Hex, flange and prevailing-torque nuts
- Flat, spring and specialised washers
- Lock rings and circlips
- Cotter and retaining pins
- Threaded and precision-formed components
- Standard and customised fastening solutions

Supported by controlled manufacturing, dimensional inspection and material traceability, Rex Consolidated serves OEMs, aftermarket distributors and commercial-vehicle component suppliers worldwide.

Tire Chock Bracket for Commercial Vehicles



Rex Consolidated supplies durable tyre chock brackets designed to store and secure wheel chocks safely on trucks, trailers, buses and other commercial vehicles. The bracket provides a dedicated mounting position on the vehicle chassis, keeping the wheel chock readily accessible while helping prevent movement, loss or damage during transportation.
Manufactured from formed steel components with a corrosion-resistant surface finish, the bracket features a secure retaining mechanism and practical mounting points for dependable installation. Different dimensions, materials, coatings and retaining arrangements can be developed according to the wheel-chock size, vehicle configuration, customer drawing or physical sample.

Key Features

- Secure storage of wheel chocks on the vehicle
- Suitable for trucks, trailers and commercial vehicles
- Strong formed-steel construction
- Corrosion-resistant surface finishes available
- Quick access and convenient release
- Different mounting-hole configurations available
- Standard and customised designs
- Development from drawings, samples or application requirements

Customers should confirm the wheel-chock dimensions, mounting location, load conditions and required surface finish before ordering to ensure correct fitment.

CONTACT INFORMATION

REX Consolidated
80 DLF Industrial Area Phase 1
Faridabad Haryana-121003
India

All information and data stated in this Product Range document has been compiled with utmost care. Nevertheless, Invicta accepts no liability for any errors, omissions or other inaccuracies contained herein. Subject to change without notice. Reprinting or reproduction, in whole or in part, including of photographs, illustrations or graphics, is not permitted without the prior written consent of Invicta India Pvt. Ltd.. We reserve all rights in connection with this document.
Any similarity or resemblance is unintended and is merely a coincidence. The vehicle applications cited in this Product Range document may possibly be valid only up to the date printed on the use Rex Consolidated consistently. All references made in this Product Range document to the item numbers of vehicle manufacturers and/or competitors are provided for the purpose of comparison only. Such information is not allowed to be used in invoices issued to vehicle owners.

For enquiries, please email us : rahul@invictaindia.com
Contact No.- +91 98106 14124

All drawings & illustrations are the property right of Rex consolidated and cannot be copied, duplicated or re-printed in any form without the prior written consent from INVICTA.

Rex Consolidated Copyright @ 2026
Use All Right Reserved