ea architecture

CHANGE ORDER REQUEST PROPOSAL NO. 01

This Change Order Request seeks an itemized quotation for proposed changes in the Contract Documents that may require changes in the Contract Sum and/or Contract Time. All conditions, requirements, materials and workmanship are to be as described in the Contract Documents unless specifically stated otherwise. Do not proceed with the proposed work until a Change Order or Field Change is approved or a Construction Change Directive is issued.

DATE: June 25, 2018
TO: Saunders Construction
PROJECT: **Evanston 3, 6 &**
Evanston WY Stake
721 West Cheyenne Drive, Evanston, Wyoming
PN: 501092517010101

Description of Proposed Changes

Provide the materials and labor necessary to complete the following:

1. The dimension of the grab bar placement on Detail A on sheet G104 has been revised.
2. Multiple sheets have been revised to complete the following:
   Add door 104A at Waiting 104.
   Add door 139A at Waiting 139.
   Add door hardware group 20B to Section 080601 Hardware Group and Keying Schedules.
   Group 20B:
   a. 1 set: Smoke Gaskets.
   b. 4 each: Hinges.
   c. 1 each: Latchset Function F75.
   d. 1 each: Stop.
   e. 1 each: Door Grille
3. Revised elevation dimensions on detail E on sheet A306
4. Maximum capacity signs are installed at the door to each assembly room. Sheet F102 shows the room signage locations.
5. Wyoming has adopted the 2017 National Electrical Code, refer to the revised sheets E111 and E606.
6. Concrete-encased grounding electrode are required at the storage building, see revised sheet E501.
7. Prior to occupancy, a compliance inspection will be required by the State Fire Marshal's office. A written request for an inspection shall be submitted to the appropriate office approximately 21 working days (one calendar month) before project completion to facilitate scheduling of the required inspection.
8. Sheets E111 and E606 have been revised to show Font Bonding requirements.
9. The receptacle located in the Font has been relocated so it is greater that 6' away from the Font to comply with NEC 680.22(A)(1). Please see the attached revised sheet E111.
10. The switch located in the Font has been relocated so it is greater than 5' away from the Font to comply with NEC 680.22(B)(7)(C). Please see the attached revised sheet E111.
11. The light fixture located above the Font is a type F1. The light fixture is protected by the GFCI receptacle located in the Font. The distance from the high water level of the Font to the ceiling is 8'-6". The F1 light fixture mounting will comply the requirements of with NEC 680.22(B)(2).
12. Change GFCI receptacles to tamper resistant as required by the attached instructions from the electrical engineer.

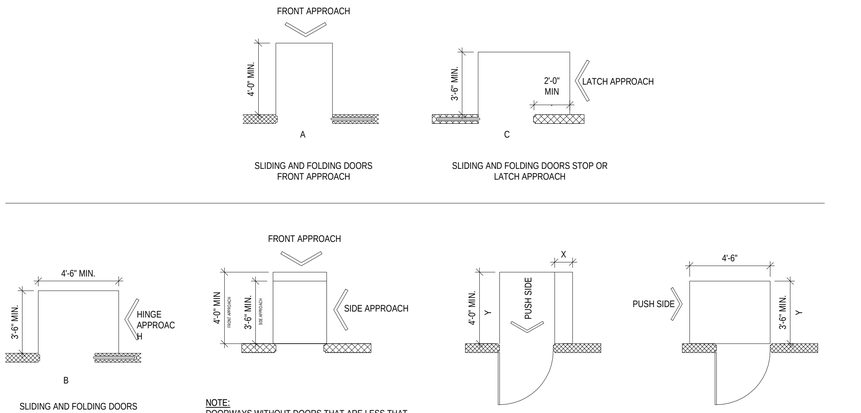

MANUEVERING CLEARANCES

C G104

1/4" = 1'-0"

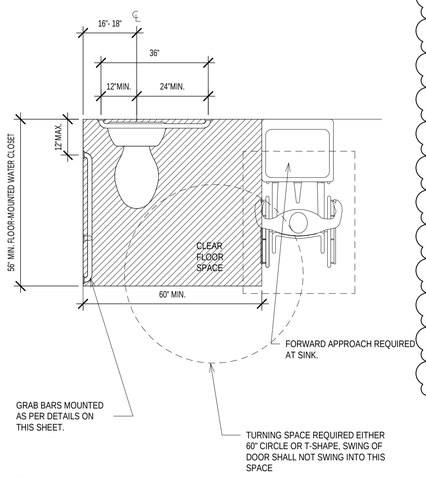

ICC/ANSI FIGURE 604.3

NOTES:

1- 604.3.2 OVERLAP. THE REQUIRED CLEARANCE AROUND THE WATER CLOSET SHALL BE PERMITTED TO OVERLAP THE WATER CLOSET, ASSOCIATED GRAB BARS, PAPER DISPENSERS, SANITARY NAPKIN RECEPTACLES, COAT HOOKS, SHELVES, ACCESSIBLE ROUTES, CLEAR FLOOR SPACE AT OTHER FIXTURES, AND THE TURNING SPACE. NO OTHER FIXTURES OR OBSTRUCTIONS SHALL BE WITHIN THE REQUIRED WATER CLOSET CLEARANCE.

2- 604.6 FLUSH CONTROLS. FLUSH CONTROLS SHALL BE HAND OPERATED OR AUTOMATIC. HAND OPERATED FLUSH CONTROLS SHALL COMPLY WITH SECTION 309. FLUSH CONTROLS SHALL BE LOCATED ON THE OPEN SIDE OF THE WATER CLOSET.

SECTION 603 & 604

PUBLIC WATER CLOSETS

D G104

1/2" = 1'-0"

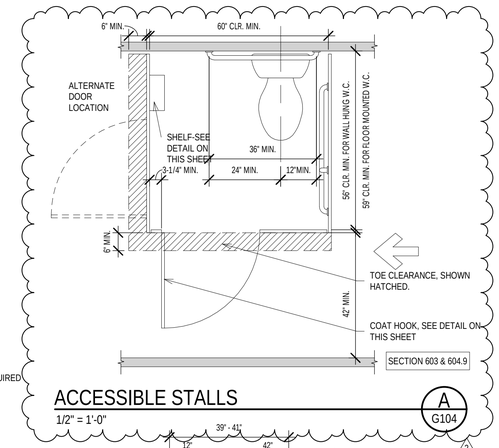

ACCESSIBLE STALLS

A G104

1/2" = 1'-0"

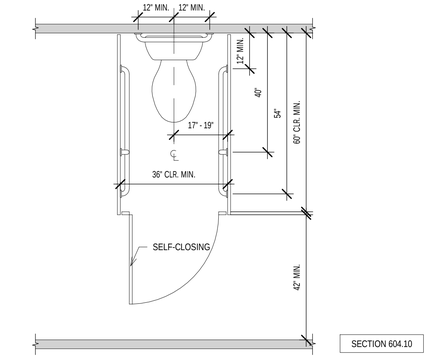

AMBULATORY ACCESSIBLE STALL

B G104

1/2" = 1'-0"

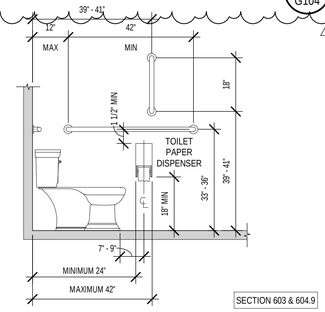

ACCESSIBLE STALLS

E G104

1/2" = 1'-0"

Architect / Engineer:
ea architecture
11576 South State Street, Suite 103b
Draper, Utah 84020

LICENSED ARCHITECT
PAUL ANTHONY PAGE
C-2394
Date 5/29/18
STATE OF WYOMING

A New Granger 250 for
Evanston 3, 6, &
Evanston WY Stake
721 West Cheyenne Drive
Evanston Wyoming

Project for:
THE CHURCH OF
JESUS CHRIST
OF LATTER-DAY SAINTS

Mark	Date (D-M-Y)	Description
2	5/17/2018	Revision 2

Project Number: 18-02
Plan Series: G25-SC-17-03
Date: March 29, 2018

Sheet Title: ACCESSIBILITY - PUBLIC SPACES

18062NEW

Sheet: G104

5/17/2018 2:31:38 PM

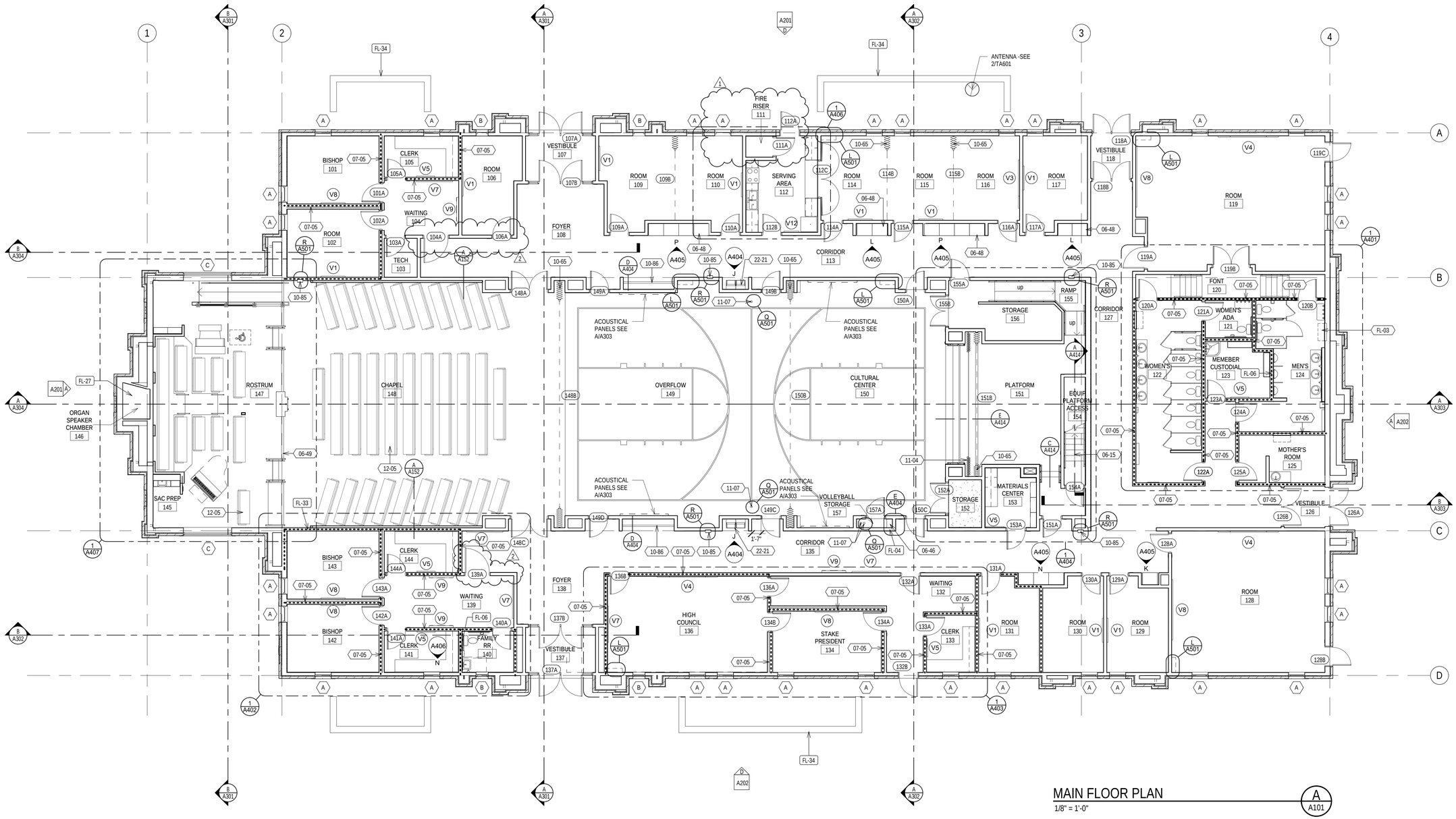

KEYNOTES

XX-XX ← KEYNOTE MATERIAL

MATERIAL / SPECIFICATION KEYNOTES

06-15	WOOD STAIR FRAMING, SEE DETAILS & STRUCTURAL DRAWINGS
06-46	SHELVING, SEE DETAILS & SPECIFICATION
06-48	WOOD VENEER FACED ARCHITECTURAL CABINETS, SEE DETAILS & SPECIFICATION
06-49	ROSTRUM CASEWORK, SEE DETAILS & SPECIFICATION
07-05	BLANKET SOUND INSULATION, SEE SCHEDULE, DETAILS, & SPECIFICATION
10-65	FOLDING ACCORDION DOOR, SEE DETAILS & SPECIFICATION
10-85	FIRE EXTINGUISHER, SEE SPECIFICATION
10-86	HAT & COAT RACK, SEE SPECIFICATION
11-04	MANUALLY OPERATED STAGE CURTAIN, SEE DETAILS & SPECIFICATION
11-07	VOLLEYBALL POST HOLE, SEE DETAILS & SPECIFICATIONS
12-05	CUSHIONED PEW SEATING AS SELECTED, SEE DETAILS & SPECIFICATION
22-21	ELECTRICAL WATER COOLER, SEE PLUMBING DRAWINGS & SPECIFICATION

KEYNOTES

XX-XX ← KEYNOTE INSTRUCTIONAL

INSTRUCTIONAL KEYNOTES

FL-03	SEE ARCHITECTURAL DIMENSION PLAN & ENLARGED PLANS
FL-04	SEE ARCHITECTURAL WALL TYPES PLAN FOR ALL WALL TYPES
FL-06	CONT. SOUND INSULATION IN WALL, TYPICAL, SEE SPECIFICATIONS
FL-27	ORGAN LOFT SPEAKER, SEE A/V DRAWINGS
FL-33	DRAFT/FIRESTOP AT 9'-4" O.C. TYPICAL
FL-34	MECHANICAL ENCLOSURE WALL, SEE CIVIL & MECHANICAL DRAWINGS

FLOOR PLAN GENERAL NOTES

1. SEE SHEET A103 FOR DIMENSIONS.
2. SEE SHEET A111, A112 & A113 FOR WALL TYPES
3. INSULATE ATTIC SPACE ABOVE AND INTERIOR WALLS AROUND ENTRY 107, 118, 126 AND 137.
4. PROVIDE SOLID BLOCKING IN THE WALLS AT ALL DOOR STOPS, VISUAL DISPLAY BOARDS, TOILET COMPARTMENTS, LAVATORY SUPPORTS, WALL HUNG CABINETS, AND AT ALL OTHER EQUIPMENT AND ACCESSORY LOCATIONS.
5. FOR ELEVATIONS OF VISUAL DISPLAY BOARDS, SEE SHEET A601.
6. VAPOR RETARDER UNDER CONCRETE SLAB - SEE STRUCTURAL.
7. FOR LOCATION OF RETURN AIR DUCT IN STUD WALLS, SEE MECHANICAL DRAWINGS.
8. PROVIDE A 2x FIRE BLOCKING IN ALL WALLS AT CEILING AND FLOOR LEVELS.
9. ALL WALLS EXCEEDING 10 FEET IN HEIGHT, PROVIDE 2x FIRE BLOCKING NOT TO EXCEED 10'-0" O.C. VERTICALLY.
10. FOR DOOR SCHEDULES, SEE SHEET A602.
11. SEE CIVIL SHEETS FOR CONTINUATION OF CONCRETE SIDEWALK AT ENTRIES AND ALL OTHER SITE CONCRETE.
12. GRID LINES ARE TO BE TO FACE OF STUD UNLESS NOTED OTHERWISE.
13. IF AHJ REQUIRES A "KNOX BOX, ARCHITECT WILL INDICATE THE LOCATION PER THE AHJ'S REQUIREMENT. IF NOT REQUIRED, REMOVE REFERENCES TO A "KNOX" BOX AND DO NOT PROVIDE ONE.
14. LIGHT COVE AND SLOPED WALL, SEE A/A152.

Architect / Engineer:

ea architecture
11576 South State Street, Suite 103b
Draper, Utah 84020

LICENSED ARCHITECT
PAUL ANTHONY PACE
C. 239
Date: 5/29/18
STATE OF WYOMING

A New Granger 250 for
Evanston 3, 6, &
Evanston WY Stake
721 West Cheyenne Drive
Evanston Wyoming

Project for:
THE CHURCH OF
JESUS CHRIST
OF LATTER-DAY SAINTS

Mark	Date (Dash 1)	Description
1	5/17/2018	Revision 1
2		Revision 2

Project Number: 18-02
Plan Series: G25-SC-17-03
Date: March 29, 2018

Sheet Title: MAIN FLOOR PLAN

18062NEW

Sheet: A101

5/17/2018 10:27:02 AM

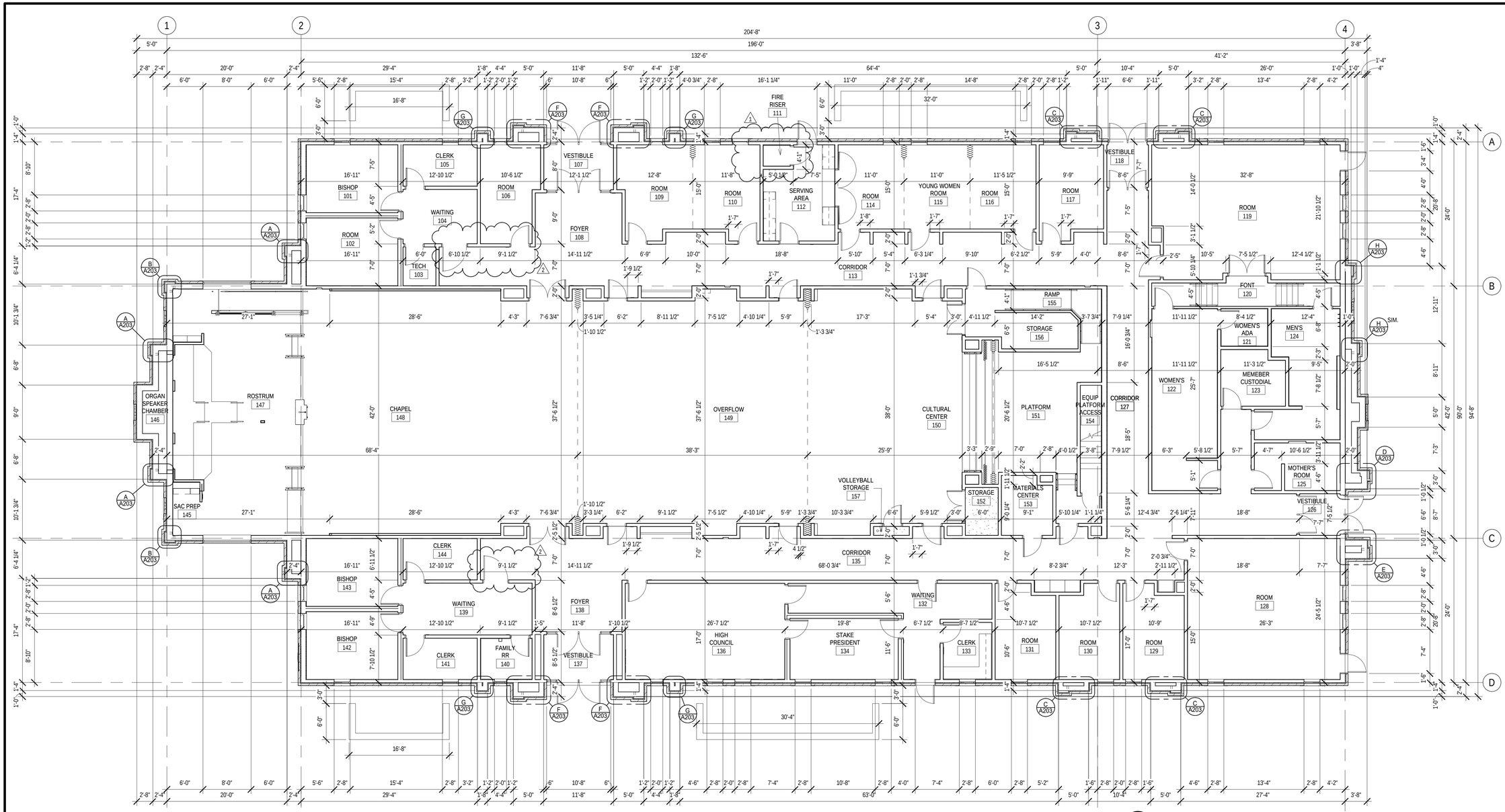

MAIN FLOOR DIMENSION PLAN

1/8" = 1'-0"

1 / A103

DIMENSION PLAN GENERAL NOTES

1. DIMENSIONS ARE FROM FACE OF STUD UNLESS NOTED OTHERWISE.
2. SEE SHEETS A111, A112 & A113 FOR WALL TYPES.
3. FOR LOCATION OF RETURN AIR DUCTS IN STUD WALLS SEE MECHANICAL DRAWINGS.

Architect / Engineer:

ea architecture
11576 South State Street, Suite 103b
Draper, Utah 84020

LICENSED ARCHITECT
PAUL ANTHONY EVANS
C-2394
Date 3/29/18
STATE OF WYOMING

A New Granger 250 for
Evanston 3, 6, &
Evanston WY Stake
721 West Cheyenne Drive
Evanston Wyoming

Project for:
THE CHURCH OF
JESUS CHRIST
OF LATTER-DAY SAINTS

Mark	Date (D-M-Y)	Description
1	Date 1	Revision 1
2	5/17/2018	Revision 2

Project Number:
18-02
Plan Series:
G25-SC-17-03
Date:
March 29, 2018

Sheet Title:
MAIN FLOOR DIMENSION PLAN

18062NEW

Sheet:
A103

5/17/2018 10:30:07 AM

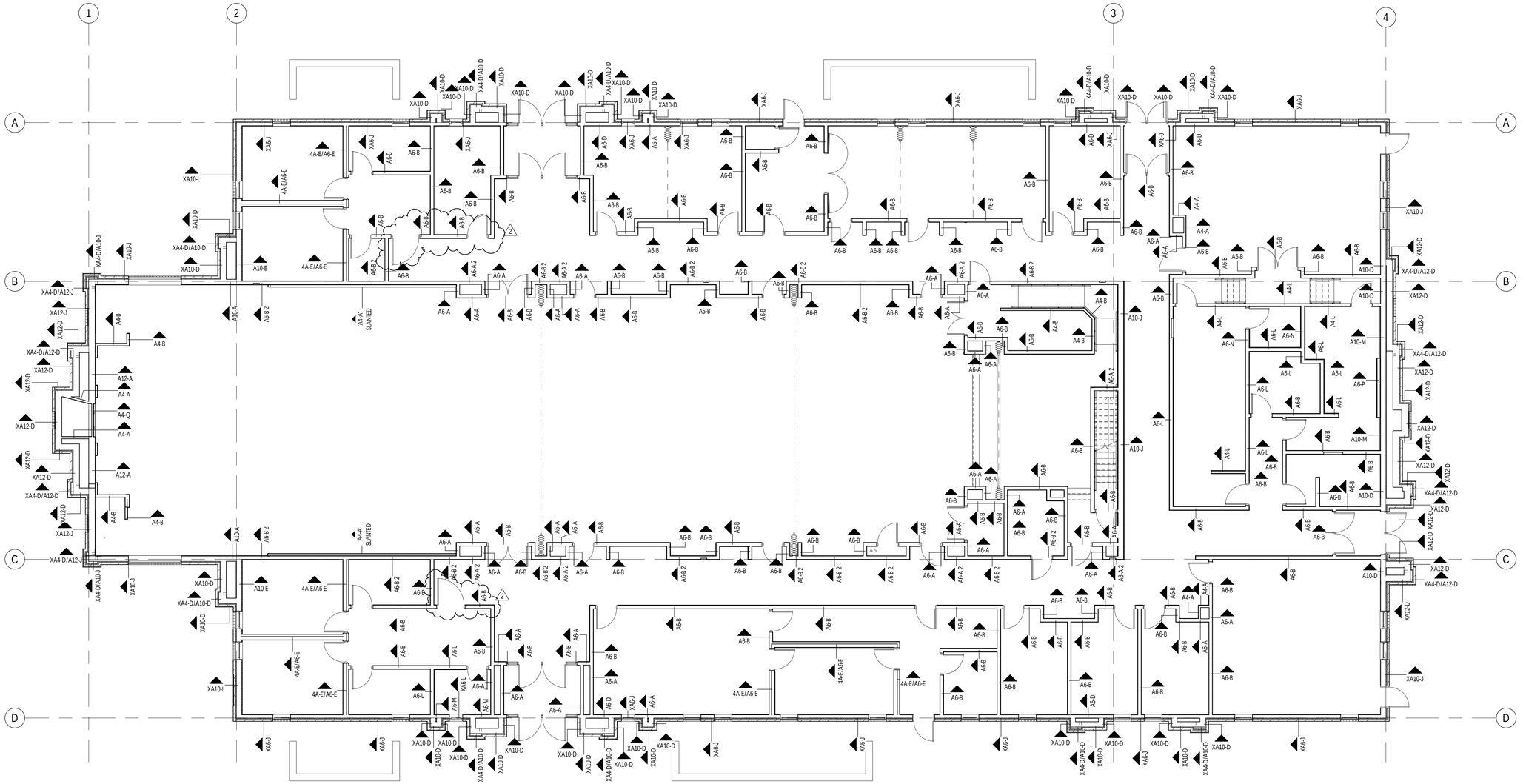

MAIN FLOOR WALL TYPES
1/8" = 1'-0"
1
A105

WALL TYPES FLOOR PLAN GENERAL NOTES

1. SEE SHEETS A111, 112 & A113 FOR WALL DESCRIPTIONS.

Architect / Engineer:

ea architecture
11576 South State Street, Suite 103b
Draper, Utah 84020

LICENSED ARCHITECT
PAUL ANTHONY EVANS
C-2391
Date 3/29/18
STATE OF WYOMING

A New Granger 250 for
Evanston 3, 6, &
Evanston WY Stake
721 West Cheyenne Drive
Evanston Wyoming

Project for:
THE CHURCH OF
JESUS CHRIST
OF LATTER-DAY SAINTS

Mark	Date (D-M-Y)	Description
2	5/17/2018	Revision 2

Project Number:
18-02
Plan Series:
G25-SC-17-03
Date:
March 29, 2018

Sheet Title:
MAIN FLOOR
WALL TYPES

18062NEW

Sheet:
A105

5/17/2018 10:37:28 AM

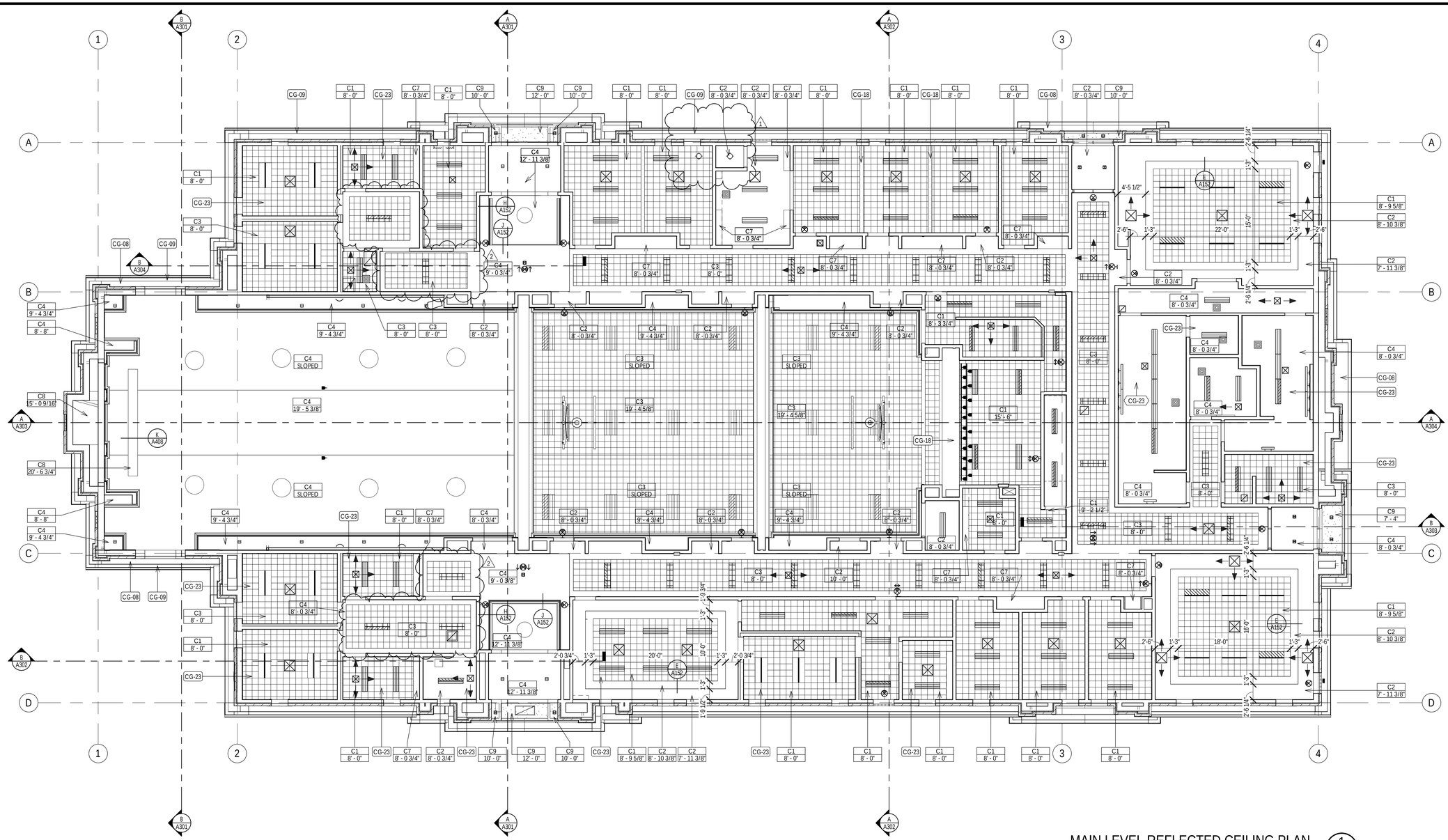

MAIN LEVEL REFLECTED CEILING PLAN

1/8" = 1'-0"

1 / A151

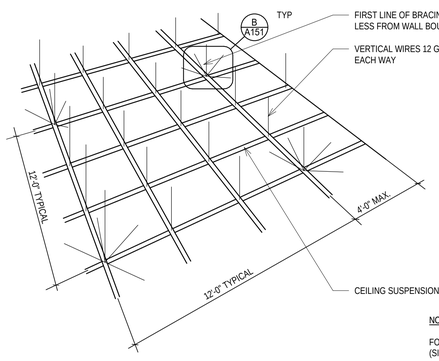

NOTES:

1. SPLAY WIRE BRACING AND COMPRESSION POSTS/STRUTS ARE ONLY REQUIRED IN SEISMIC DESIGN CATEGORIES D, E, AND F.
2. AREAS SMALLER THAN 1,000 SF AND WITH WALLS ON FOUR SIDES EXTENDING TO THE STRUCTURE NEED NOT HAVE SPLAY WIRE REINFORCING. BOUNDARY WALLS MUST BE BRACED TOP AND BOTTOM INDEPENDENT OF CEILING TO QUALIFY.
3. SEISMIC CLIP IS REQUIRED IN SEISMIC DESIGN CATEGORIES D, E, AND F.
4. USE 7/8" WALL MOULDING IN SEISMIC DESIGN CATEGORIES D, E, AND F. ATTACH TEES/RUNNERS TO WALL WITH SEISMIC CLIPS.

NOTE:

FOR METAL ACOUSTICAL SUSPENSION ASSEMLIES (SIMILAR FOR METAL SUSPENSION SYSTEM: GYPSUM BOARD)

CEILING SUSPENSION DETAIL

1 1/2" = 1'-0"

A / A151

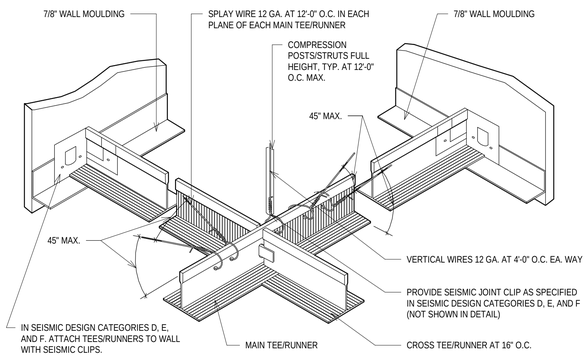

CEILING SUSPENSION DETAIL

1 1/2" = 1'-0"

B / A151

REFLECTED CEILING PLAN - FINISH SCHEDULE

CEILING TYPE → C1 / HEIGHT → 1' - 0"

CEILING TYPE → C1 / REFER TO SECTION → SLOPE

C1. CEILING SUSPENSION SYSTEM WITH GYPSUM BOARD AND ACOUSTICAL TILE

C2. CEILING SUSPENSION SYSTEM WITH GYPSUM BOARD - PAINTED

C3. ACOUSTICAL TILE ON GYPSUM BOARD

C4. GYPSUM BOARD - PAINTED

C5. METAL SOFFIT - SEE A/A305

C6. CONTINUOUS VENT STRIP

C7. WOOD FURRED DOWN OVER CABINETS - SEE B/A402

C8. GYPSUM BOARD ATTACHED, TO STRUCTURE, TEXTURED, PAINTED

C9. EXTERIOR STUCCO SYSTEM SOFFIT

CEILING PLAN GENERAL NOTES

1. WALL MOUNTED LIGHT FIXTURES THAT OCCUR BELOW CEILING LINE ARE NOT SHOWN.
2. MOUNTING OF SPEAKERS: CORRIDOR - SEE A501.
3. PROVIDE SEISMIC BRACING AT ALL CEILING SUSPENSION SYSTEMS.
4. ATT CORRIDORS, ACOUSTICAL CEILING TILE IS TO BE 6 TILES ACROSS WITH A BORDER OF GYPSUM BOARD AS SHOWN ON DRAWINGS.
5. FOR SUSPENSION CEILING SYSTE DETAILS, SEE A/A151 & B/A151.
6. GYPSUM BOARD CONTROL JOINT.
7. STEEL LINTEL - PAINTED.
8. COORDINATE GRILLE LOCATION WITH MECHANICAL DRAWINGS.

KEYNOTES

XX-XX ← KEYNOTE MATERIAL

INSTRUCTIONAL KEYNOTES

CG-08	EXT. METAL SOFFIT, COLOR AS SEL. BY ARCHITECT. SEE DETAILS
CG-09	CONTINIOUS VENT STRIP, SEE DETAILS
CG-18	FOLDING PARTITION & TRACK, SEE DETAILS & SPECIFICATIONS
CG-23	INSULATE THE ROOM CEILING ABOVE FOR SOUND CONTROL

Architect / Engineer:

ea architecture
11576 South State Street, Suite 103b
Draper, Utah 84020

LICENSED ARCHITECT
PAUL ANTHONY DAVIS
No. C-2394
Date 5/29/18
STATE OF WYOMING

A New Granger 250 for

Evanston 3, 6, & Evanston WY Stake

721 West Cheyenne Drive
Evanston Wyoming

Project for:
THE CHURCH OF JESUS CHRIST OF LATTER-DAY SAINTS

Mark	Date (Dd-Mm-Yr)	Description
1	29-05-18	Revision 1
2	5/17/2018	Revision 2

Project Number: 18-02
Plan Series: G25-SC-17-03
Date: March 29, 2018

Sheet Title: REFLECTED CEILING PLAN

18062NEW

Sheet: A151

5/17/2018 1:47:47 PM

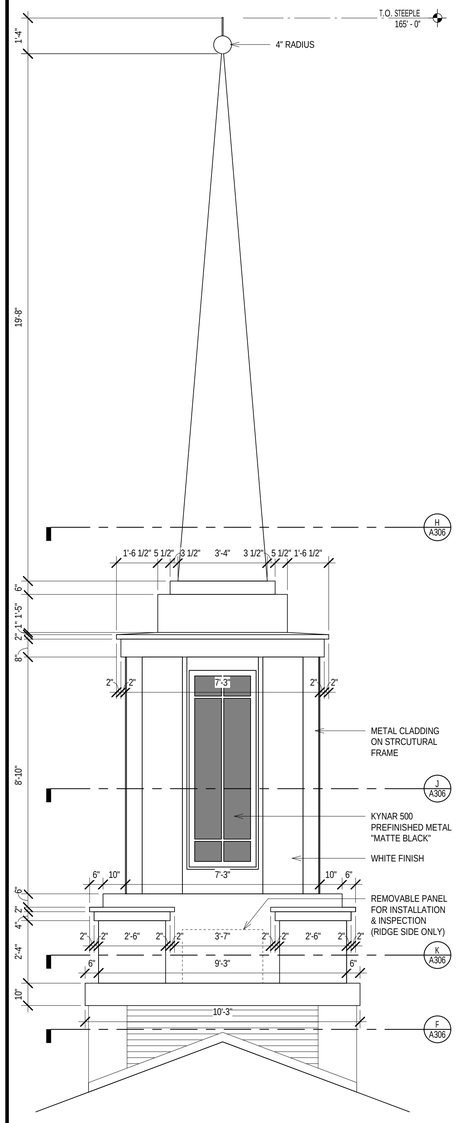

STEEPLE ELEVATION

3/8" = 1'-0"

A
A306

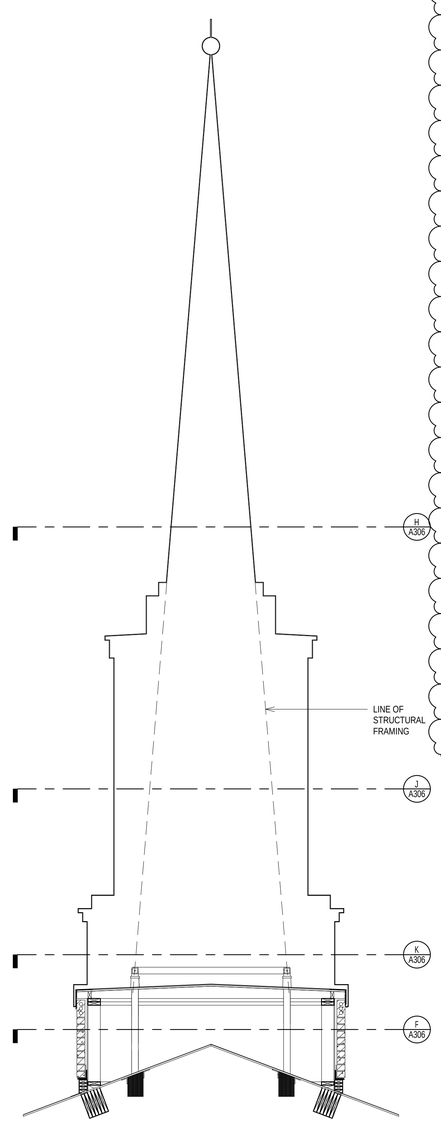

STEEPLE SECTION

3/8" = 1'-0"

B
A306

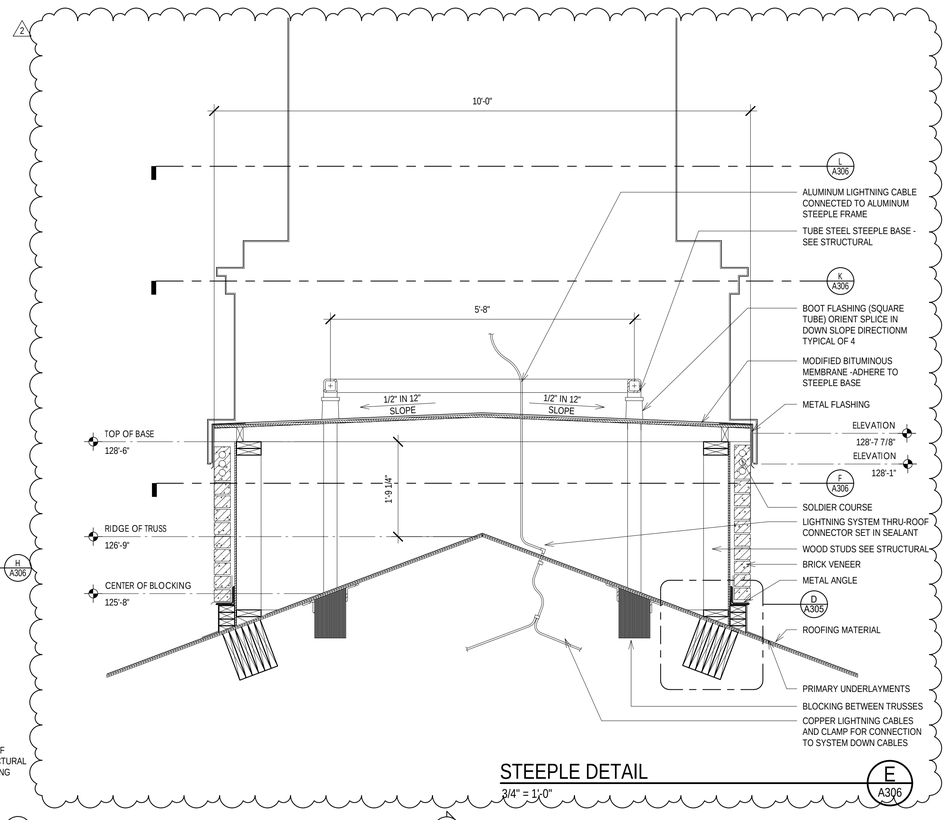

STEEPLE DETAIL

3/4" = 1'-0"

E
A306

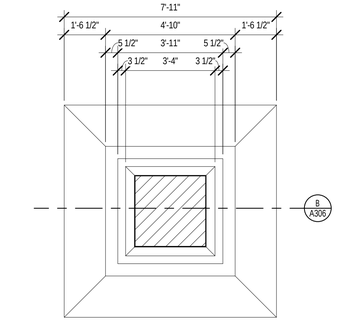

STEEPLE PLAN

3/8" = 1'-0"

H
A306

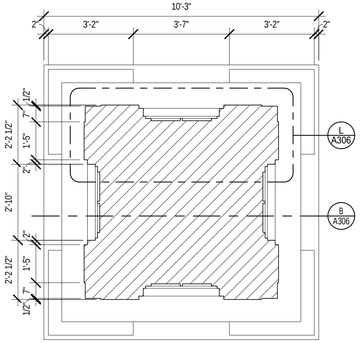

STEEPLE PLAN

3/8" = 1'-0"

J
A306

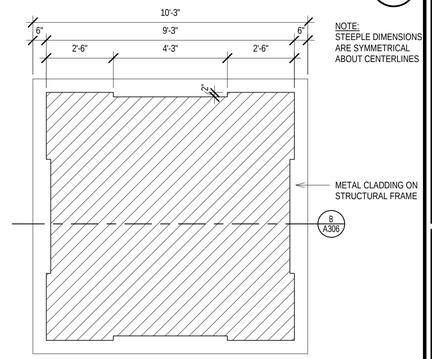

STEEPLE PLAN

3/8" = 1'-0"

K
A306

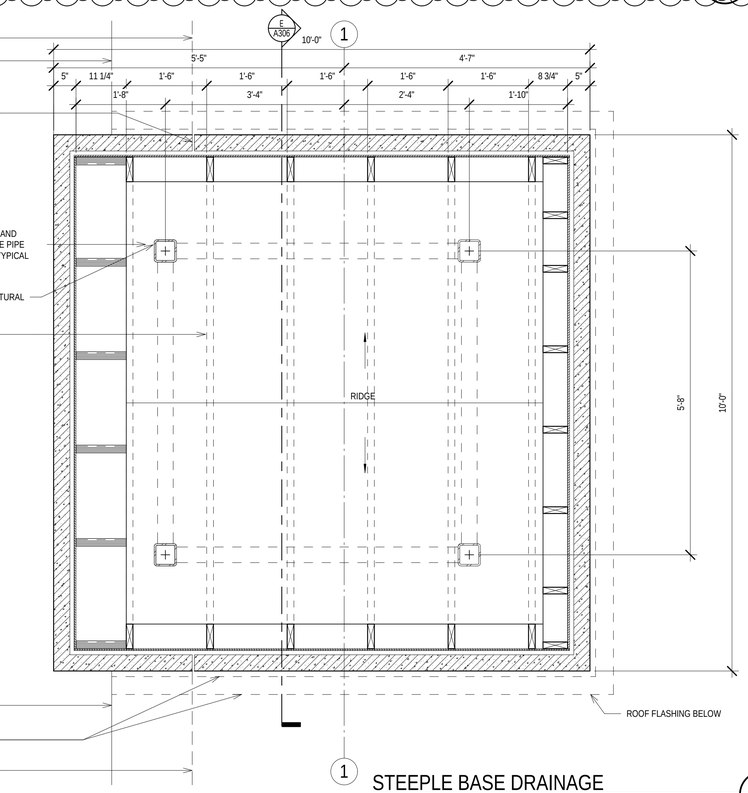

STEEPLE BASE DRAINAGE

3/4" = 1'-0"

F
A306

NOTE:
NUMBER AND PLACEMENT OF MUNTINS IN
WINDOW ELEMENT MAY VARY DEPENDING
ON STYLE OPTION SELECTED

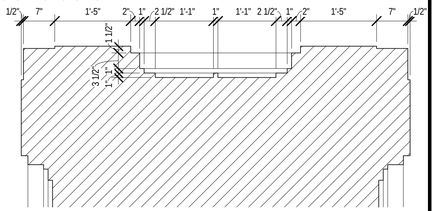

STEEPLE PLAN

3/4" = 1'-0"

L
A306

Architect / Engineer:

ea architecture
11576 South State Street, Suite 103b
Draper, Utah 84020

LICENSED ARCHITECT
PROFESSIONAL ENGINEER
C. 2394
Robert A. Ward
Date: 5/29/18
STATE OF WYOMING

A New Granger 250 for

Evanston 3, 6, &
Evanston WY Stake

721 West Cheyenne Drive
Evanston Wyoming

Project for:
THE CHURCH OF
JESUS CHRIST
OF LATTER-DAY SAINTS

Mark	Date	Description
2	5/17/2018	Revision 2

Project Number:
18-02

Plan Series:
G25-SC-17-03

Date:
March 29, 2018

Sheet Title:
STEEPLE PLANS, ELEVATIONS, SECTIONS AND DETAILS

18062NEW

Sheet:
A306

5/17/2018 2:47:03 PM

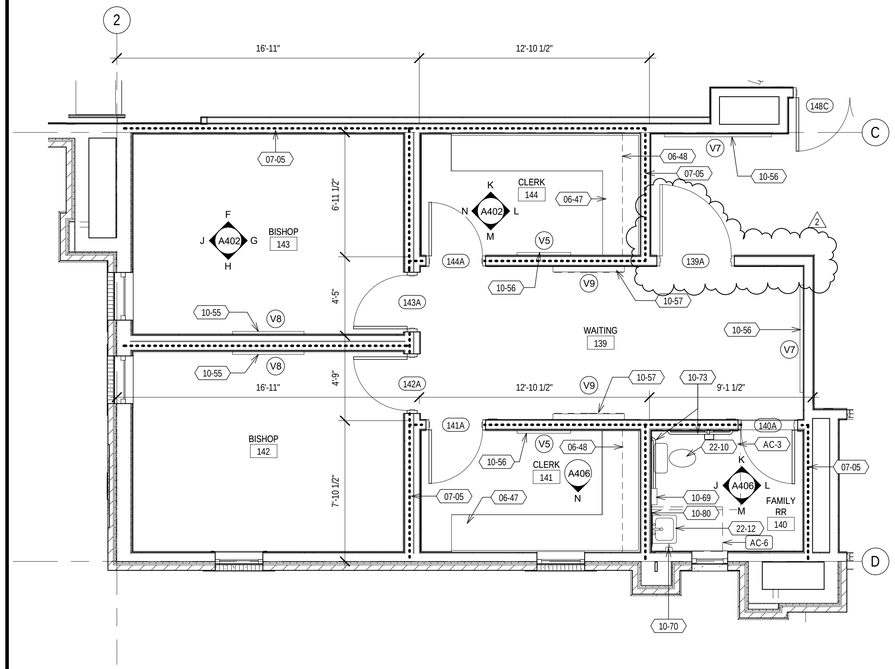

ENLARGED BISHOP'S OFFICE, CLERK'S OFFICE, AND FAMILY RESTROOMS

1/4" = 1'-0" — OTHER BISHOP, CLERK, AND WAITING AREAS ARE SIMILAR — 1 / A402

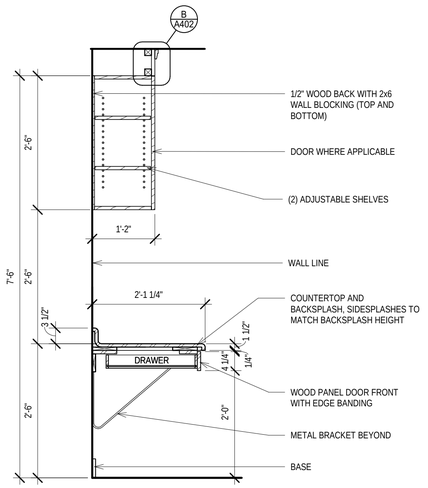

SECTION

3/4" = 1'-0" — A / A402

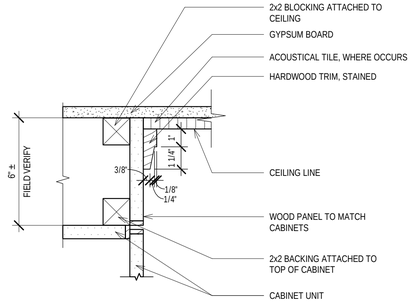

SOFFIT DETAIL

3" = 1'-0" — B / A402

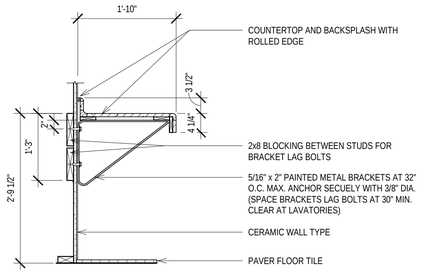

SECTION

3/4" = 1'-0" — C / A402

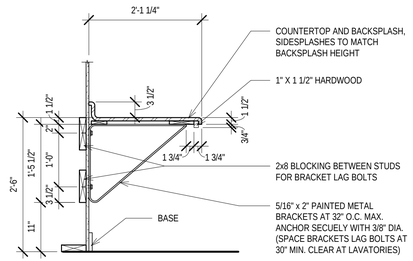

SECTION

3/4" = 1'-0" — D / A402

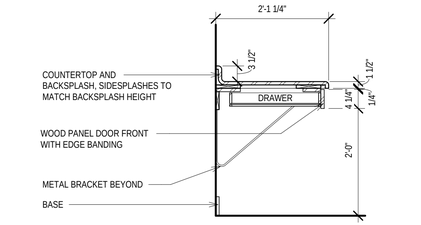

SECTION

3/4" = 1'-0" — E / A402

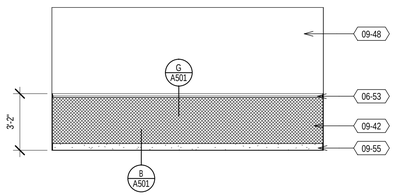

ELEVATION

1/4" = 1'-0" — F / A402

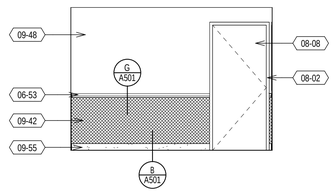

ELEVATION

1/4" = 1'-0" — G / A402

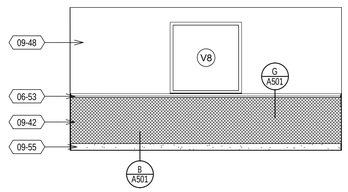

ELEVATION

1/4" = 1'-0" — H / A402

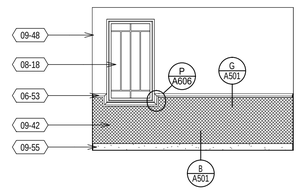

ELEVATION

1/4" = 1'-0" — J / A402

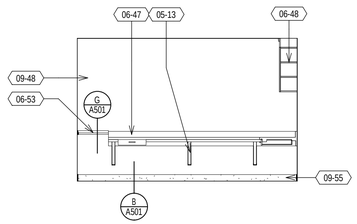

ELEVATION

1/4" = 1'-0" — K / A402

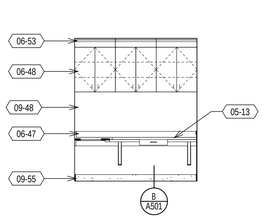

ELEVATION

1/4" = 1'-0" — L / A402

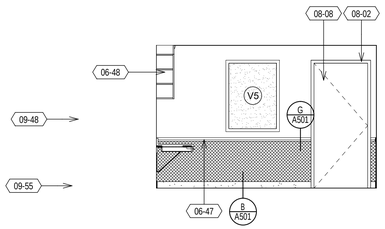

ELEVATION

1/4" = 1'-0" — M / A402

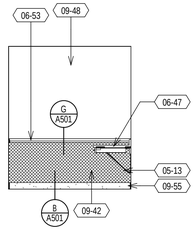

ELEVATION

1/4" = 1'-0" — N / A402

KEYNOTES

XX-XX — KEYNOTE MATERIAL

MATERIAL / SPECIFICATION KEYNOTES

05-13	METAL BRACKETS, SEE DETAILS & SPECIFICATIONS
06-47	PLASTIC LAMINATE, SEE DETAILS & SPECIFICATION
06-48	WOOD VENEER FACED ARCHITECTURAL CABINETS, SEE DETAILS & SPECIFICATION
06-53	HARDWOOD TRIM, SEE DETAILS & SPECIFICATION
08-02	INTERIOR HOLLOW METAL DOOR FRAME, SEE SCHEDULE & SPECIFICATION
08-08	INTERIOR SOLID CORE FLUSH WOOD DOORS, FACTORY FINISHED, SEE SCHEDULE & SPECIFICATION
08-18	VINYL FRAMED FIXED WINDOWS, SEE SCHEDULE, DETAILS & SPECIFICATIONS
09-42	SISAL WALL COVERING AS SELECTED, SEE FINISH SCHEDULE/ SPECIFICATION
09-48	INTERIOR PAINTED GYPSUM BOARD, SEE PAINT SCHEDULE/ SPECIFICATION
09-55	CARPET BASE, SEE FINISH SCHEDULE/ SPECIFICATION

KEYNOTES

XX-XX — KEYNOTE INSTRUCTIONAL

INSTRUCTIONAL KEYNOTES

AC-6	LAVATORY, CLEAR FLOOR SPACE, 30"X 48", FORWARD APPROACH, A.N.S.I. A117.1-2009, SECTION 606 (PG. 53) (3 EXCEPTIONS), I.B.C., 1105

Architect / Engineer:

ea architecture
11576 South State Street, Suite 103b
Draper, Utah 84020

LICENSED ARCHITECT — PAUL ANTHONY PUGH — C-2394 — Date: 5/29/18 — STATE OF WYOMING

A New Granger 250 for

Evanston 3, 6, & Evanston WY Stake

721 West Cheyenne Drive
Evanston Wyoming

Project for:

THE CHURCH OF JESUS CHRIST OF LATTER-DAY SAINTS

Mark	Date (D-M-Y)	Description
2	5/17/2018	Revision 2

Project Number: 18-02

Plan Series: G25-SC-17-03

Date: March 29, 2018

Sheet Title: ENLARGED BISHOP, CLERK, AND FAMILY RESTROOM

18062NEW

Sheet: A402

5/17/2018 10:54:24 AM

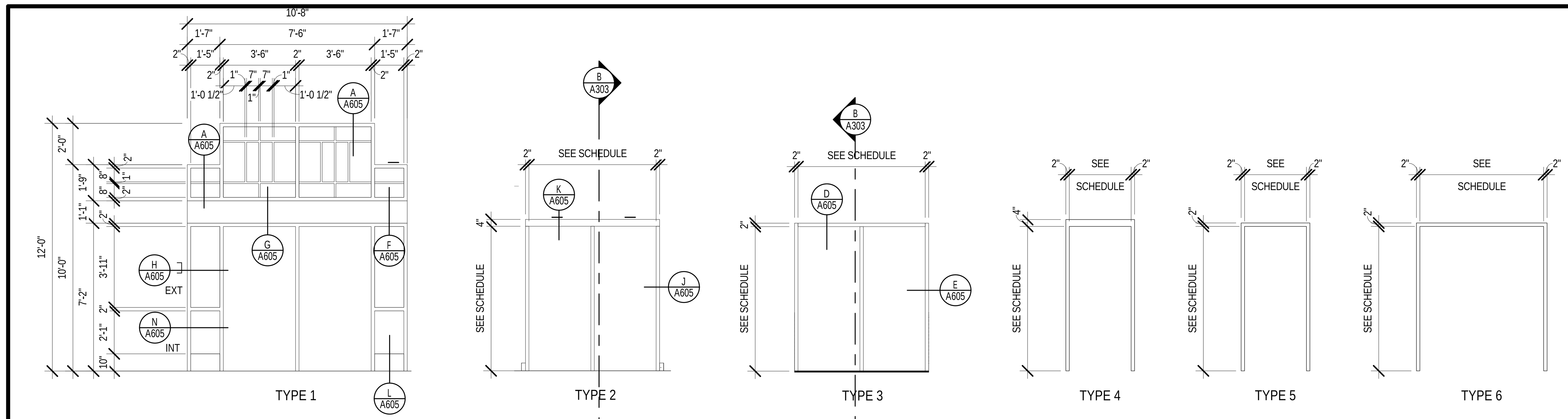

FRAME TYPES

1/4" = 1'-0"

A / A602

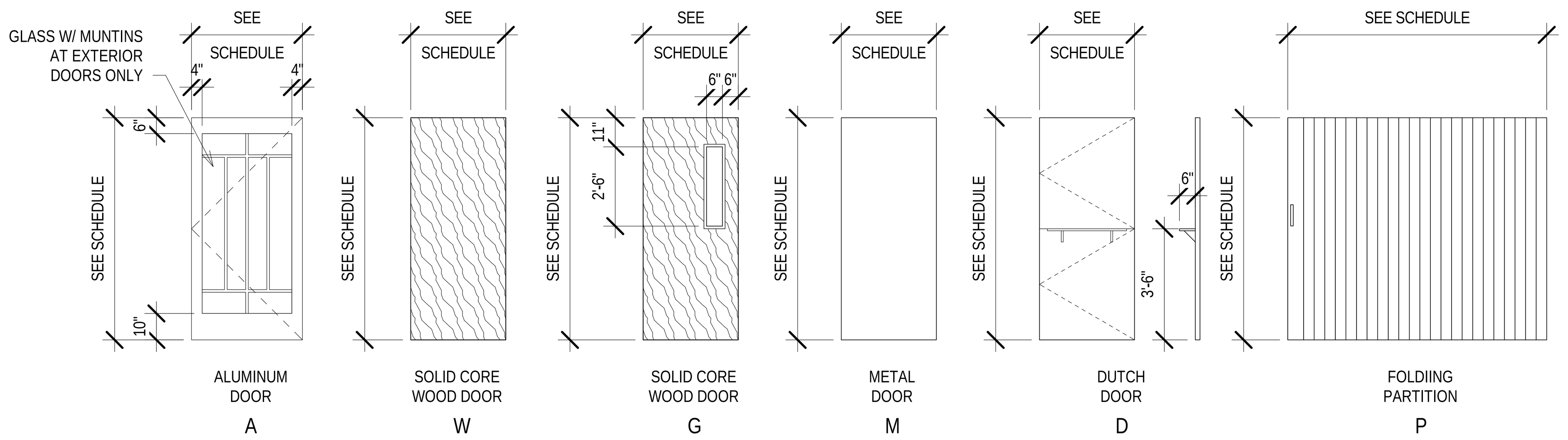

DOOR TYPES

1/4" = 1'-0"

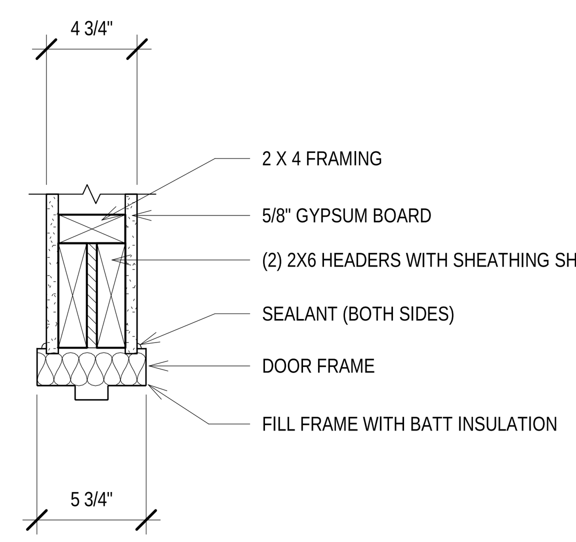

DOOR HEAD - 2X4 WALL

1 1/2" = 1'-0"

B / A602

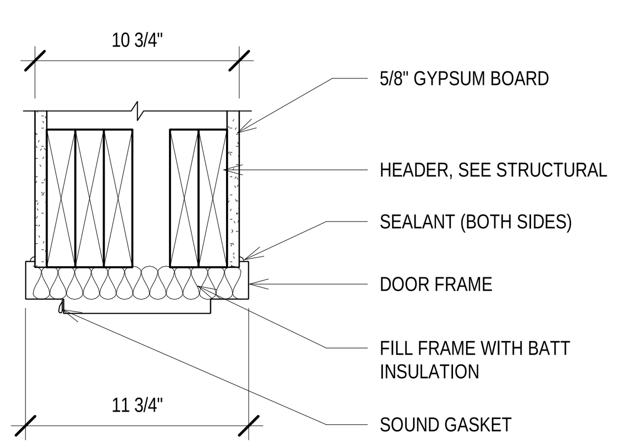

DOOR HEAD - SOUND RATED WALL

1 1/2" = 1'-0"

C / A602

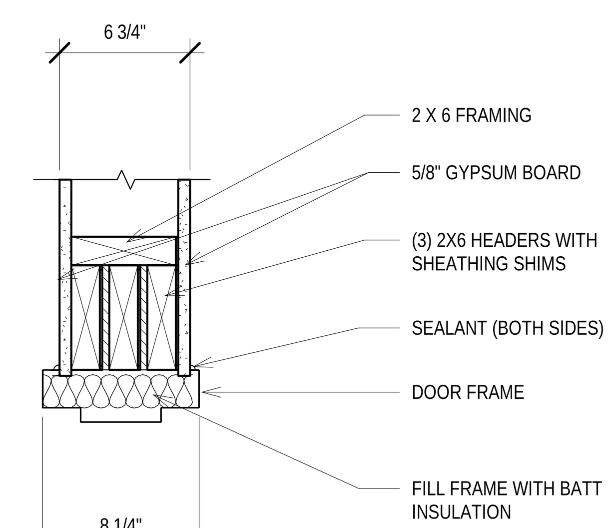

DOOR HEAD - 2X6 SHEER WALL

1 1/2" = 1'-0"

D / A602

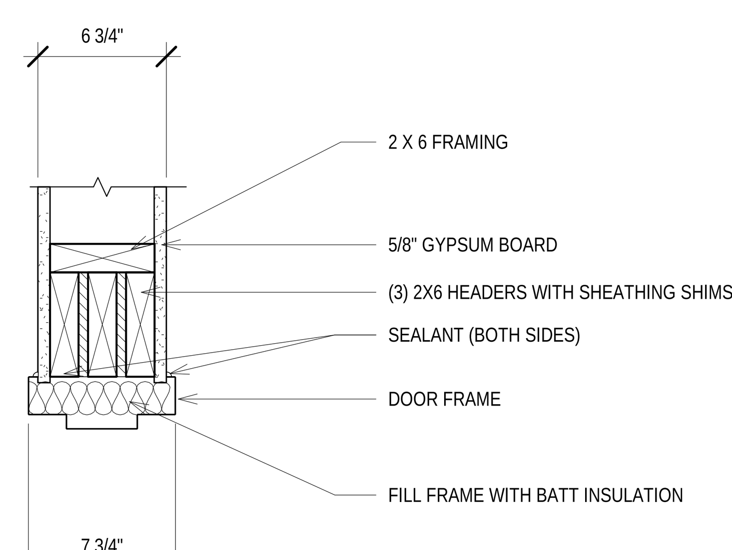

DOOR HEAD - 2X6 WALL

1 1/2" = 1'-0"

E / A602

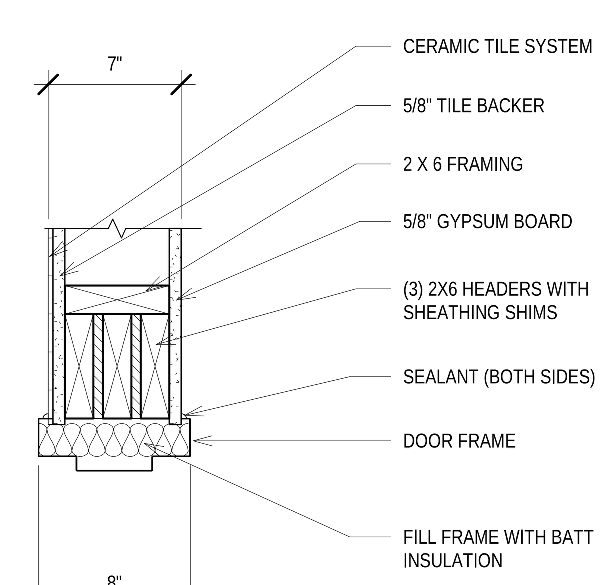

DOOR HEAD - 2X6 WALL - CERAMIC TILE

1 1/2" = 1'-0"

F / A602

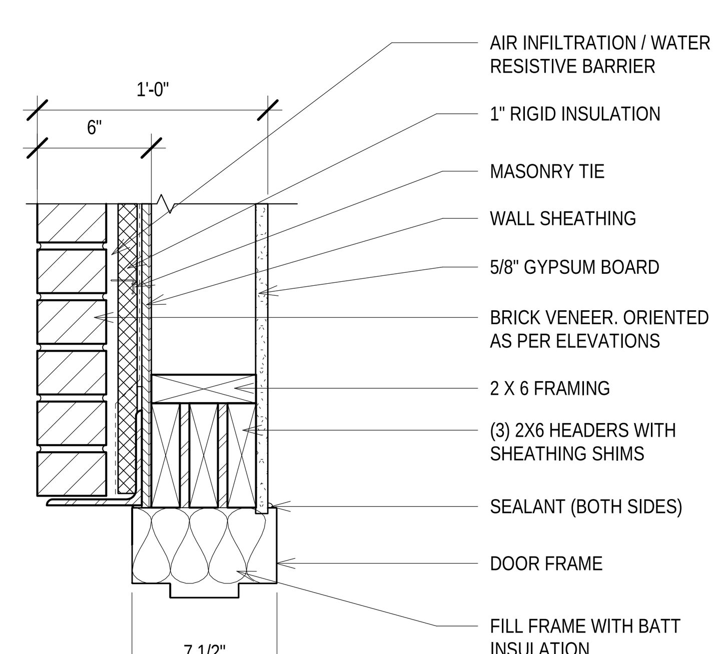

JAMB SIMILAR

DOOR HEAD @ BRICK

1 1/2" = 1'-0"

G / A602

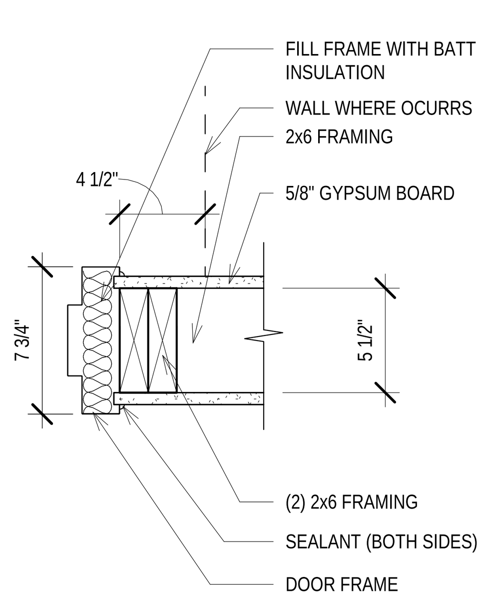

DOOR JAMB - 2X6 WALL

1 1/2" = 1'-0"

H / A602

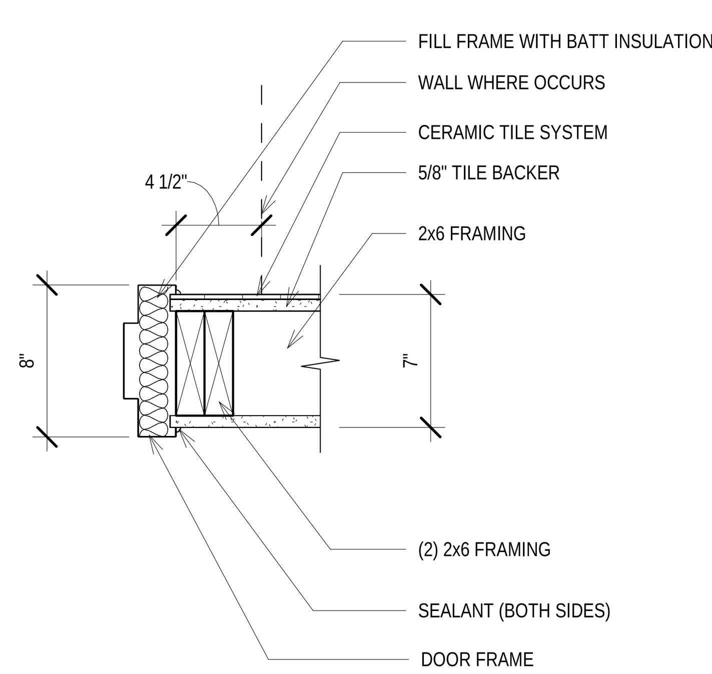

DOOR JAMB - 2X6 WALL - CERAMIC TILE

1 1/2" = 1'-0"

J / A602

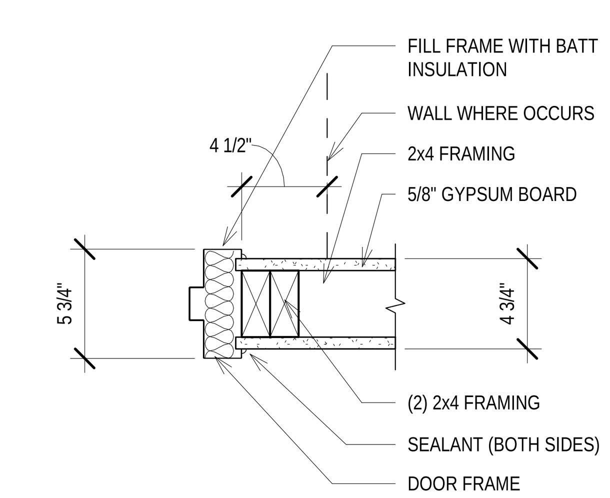

DOOR JAMB - 2X4 WALL

1 1/2" = 1'-0"

K / A602

DOOR SCHEDULE

wt	DOOR: ROOM NUMBER	TYPE	SINGLE/PAIR	WIDTH	HEIGHT	THICKNESS	FRAME TYP	HEAD	JAMB	THRESHOLD	HARDWARE GROUP	KEYING	REMARKS
101A	101	W	S	3' - 0"	7' - 0"	1 3/4"	5	C/A602	L/A606	K/A606	26	AA2	WALL STOP
102A	102	G	S	3' - 0"	7' - 0"	1 3/4"	5	C/A602	L/A606		26	AA2	WALL STOP
103A	103	W	S	3' - 0"	7' - 0"	1 3/4"	5	E/A602	H/A602		23	XAA14	WALL STOP
104A	104	G	S	4' - 0"	7' - 0"	1 3/4"	5	C/A602	L/A606		20B		WALL STOP
105A	105	W	S	3' - 0"	7' - 0"	1 3/4"	5	E/A602	H/A602	K/A606	26	XAA5	WALL STOP
106A	106	G	S	3' - 0"	7' - 0"	1 3/4"	5	E/A602	H/A602		20		WALL STOP
107A	107	A	P	3' - 6"	7' - 0"	1 3/4"	1	G/A605	H/A605	M/A605	ST1	XAA1	
107B	107	A	P	3' - 6"	7' - 0"	1 3/4"	1	G/A605	N/A605	M/A605	ST3A	XAA1	
109A	109	G	S	3' - 0"	7' - 0"	1 3/4"	5	E/A602	H/A602		20		WALL STOP
109B	109	P	-	13' - 11 3/4"	8' - 0"		-	B/A603	A/A603		-		FOLDING PARTITION
110A	110	G	S	3' - 0"	7' - 0"	1 3/4"	5	E/A602	H/A602		20		WALL STOP
111A	111	W	S	3' - 0"	7' - 0"	1 3/4"	5	E/A602	H/A602		23	XAA13	OVER HEAD STOP
112A	112	A	S	3' - 0"	7' - 0"	1 3/4"	4	G/A602	F/A606	H/A606	ST2	XAA1	
112B	112	G	S	3' - 0"	7' - 0"	1 3/4"	5	E/A602	H/A602	J/A6606	21A		OVER HEAD STOP
112C	112	W	P	6' - 0"	7' - 0"	1 3/4"	6	E/A602	H/A602		50		WALL STOP
114A	114	G	S	3' - 0"	7' - 0"	1 3/4"	5	E/A602	H/A602		20		WALL STOP WITH HARDWOOD ROSETTE
114B	114	P	-	13' - 11 3/4"	8' - 0"		-	B/A603	A/A603		-		FOLDING PARTITION
115A	115	G	S	3' - 0"	7' - 0"	1 3/4"	5	E/A602	H/A602		20		WALL STOP WITH HARDWOOD ROSETTE
115B	115	P	-	13' - 11 3/4"	8' - 0"		-	B/A603	A/A603		-		FOLDING PARTITION
116A	116	G	S	3' - 0"	7' - 0"	1 3/4"	5	E/A602	H/A602		20		WALL STOP WITH HARDWOOD ROSETTE
117A	117	G	S	3' - 0"	7' - 0"	1 3/4"	5	E/A602	H/A602		20		WALL STOP
118A	118	A	P	3' - 0"	7' - 0"	1 3/4"		K/A605	J/A605	M/A605	ST1A	XAA1	
118B	118	A	P	3' - 0"	7' - 0"	1 3/4"		D/A605	E/A605		ST3A	XAA1	
119A	119	G	S	3' - 6"	7' - 0"	1 3/4"	5	E/A602	H/A602		30		WALL STOP WITH HARDWOOD ROSETTE
119B	119	W	P	6' - 0"	7' - 0"	1 3/4"	6	F/A602	J/A602		50F		WALL STOP
119C	119	A	S	3' - 0"	7' - 0"	1 3/4"	4	K/A605	J/A605	M/A605	ST2	XAA1	
120A	120	W	S	3' - 0"	7' - 0"	1 3/4"	5	F/A602	J/A602		35		WALL STOP
120B	120	W	S	3' - 0"	7' - 0"	1 3/4"	5	F/A602	J/A602		35		WALL STOP
121A	121	W	S	3' - 0"	7' - 0"	1 3/4"	5	F/A602	J/A602		32		WALL STOP
122A	122	W	S	3' - 0"	7' - 0"	1 3/4"	5	E/A602	H/A602		28		WALL STOP
123A	123	W	S	3' - 0"	7' - 0"	1 3/4"	5	E/A602	H/A602		20A		WALL STOP
124A	124	W	S	3' - 0"	7' - 0"	1 3/4"	5	E/A602	H/A602		28		WALL STOP
125A	125	W	S	3' - 0"	7' - 0"	1 3/4"	5	E/A602	H/A602		28A		WALL STOP
126A	126	A	P	3' - 0"	7' - 0"	1 3/4"	2	K/A605	J/A605	M/A605	ST1A	XAA1	
126B	126	A	P	3' - 0"	7' - 0"	1 3/4"	3	D/A605	E/A605		ST3A	XAA1	
128A	128	G	S	3' - 0"	7' - 0"	1 3/4"	5	E/A602	H/A602		30		WALL STOP WITH HARDWOOD ROSETTE
128B	128	A	S	3' - 0"	7' - 0"	1 3/4"	4	K/A605	J/A605	M/A605	ST2	XAA1	
129A	129	G	S	3' - 0"	7' - 0"	1 3/4"	5	E/A602	H/A602		20		WALL STOP
130A	130	G	S	3' - 0"	7' - 0"	1 3/4"	5	E/A602	H/A602		20		WALL STOP
131A	131	G	S	3' - 0"	7' - 0"	1 3/4"	5	E/A602	H/A602		20		WALL STOP
132A	132	W	S	3' - 0"	7' - 0"	1 3/4"	5	E/A602	H/A602	K/A606	26	XAA16	WALL STOP
132B	132	A	S	3' - 0"	7' - 0"	1 3/4"	4	K/A605	J/A605	M/A605	ST2	XAA1	
133A	133	W	S	3' - 0"	7' - 0"	1 3/4"	5	C/A602	L/A606	K/A606	26	XAA16	WALL STOP
134A	134	W	S	3' - 0"	7' - 0"	1 3/4"	5	C/A602	L/A606	K/A606	26	AA15	WALL STOP
134B	134	W	S	3' - 0"	7' - 0"	1 3/4"	5	C/A602	L/A606	K/A606	26	AA15	WALL STOP
136A	136	W	S	3' - 0"	7' - 0"	1 3/4"	5	C/A602	L/A606	K/A606	26	XAA16	WALL STOP
136B	136	W	S	3' - 0"	7' - 0"	1 3/4"	5	E/A602	H/A602	K/A606	26	XAA16	WALL STOP
137A	137	A	P	3' - 6"	7' - 0"	1 3/4"	1	G/A605	H/A605	M/A605	ST1A	XAA1	AUTOMATIC DOOR OPENER
137B	137	A	P	3' - 6"	7' - 0"	1 3/4"	1	G/A605	N/A605	M/A605	ST3A	XAA1	AUTOMATIC DOOR OPENER
139A	139	G	S	4' - 0"	7' - 0"	1 3/4"	5	C/A602	L/A606		20B		WALL STOP
140A	140	W	S	3' - 0"	7' - 0"	1 3/4"	5	E/A602	H/A602		32		WALL STOP
141A	141	W	S	3' - 0"	7' - 0"	1 3/4"	5	E/A602	H/A602	K/A606	26	XAA7	WALL STOP
142A	142	W	S	3' - 0"	7' - 0"	1 3/4"	5	C/A602	L/A606	K/A606	26	AA4	WALL STOP
143A	143	W	S	3' - 0"	7' - 0"	1 3/4"	5	C/A602	L/A606	K/A606	26	AA3	WALL STOP
144A	144	W	S	3' - 0"	7' - 0"	1 3/4"	5	E/A602	H/A602	K/A606	26	XAA6	WALL STOP
148A	148	W	P	6' - 0"	7' - 0"	1 3/4"	6	E/A602	H/A602		52		WALL STOP WITH HARDWOOD ROSETTE
148B	148	P	-	40' - 11 3/4"	16' - 0"		-	G/A603	F/A603		-		FOLDING PARTITION
148C	148	W	P	6' - 0"	7' - 0"	1 3/4"	6	E/A602	H/A602		52		WALL STOP WITH HARDWOOD ROSETTE
149A	149	W	S	3' - 0"	7' - 0"	1 3/4"	5	E/A602	H/A602	M/A606	30		WALL STOP WITH HARDWOOD ROSETTE
149B	149	W	S	3' - 0"	7' - 0"	1 3/4"	5	E/A602	H/A602	M/A606	30		WALL STOP WITH HARDWOOD ROSETTE
149C	149	W	S	3' - 0"	7' - 0"	1 3/4"	5	E/A602	H/A602	M/A606	30		WALL STOP WITH HARDWOOD ROSETTE
149D	149	W	S	3' - 0"	7' - 0"	1 3/4"	5	E/A602	H/A602	M/A606	30		WALL STOP WITH HARDWOOD ROSETTE
150A	150	W	S	3' - 0"	7' - 0"	1 3/4"	5	E/A602	H/A602	M/A606	30		WALL STOP WITH HARDWOOD ROSETTE
150B	150	P	-	40' - 11 3/4"	16' - 0"		-	G/A603	F/A603		-		FOLDING PARTITION
150C	150	W	S	3' - 0"	7' - 0"	1 3/4"	5	E/A602	H/A602	M/A606	30		WALL STOP WITH HARDWOOD ROSETTE
151A	151	W	S	3' - 0"	7' - 0"	1 3/4"	5	E/A602	H/A602		30		WALL STOP WITH HARDWOOD ROSETTE
151B	151	P	-	23' - 11 1/4"	15' - 0"		-	H/A603	F/A404		-		FOLDING PARTITION
152A	152	W	P	5' - 0"	7' - 0"	1 3/4"	6	E/A602	H/A602	M/A606	51A		OVER HEAD STOP
153A	153	D	S	3' - 0"	7' - 0"	1 3/4"	5	D/A602	L/A602		36	XAA12	WALL STOP WITH HARDWOOD ROSETTE
154A	154	W	S	3' - 0"	7' - 0"	1 3/4"	5	E/A602	H/A602		23	XAA13	
155A	155	W	S	3' - 0"	7' - 0"	1 3/4"	5	D/A602	L/A602		30		WALL STOP WITH HARDWOOD ROSETTE
155B	155	W	P	5' - 0"	7' - 0"	1 3/4"	6	E/A602	H/A602	M/A606	52		OVER HEAD STOP
157A	157	W	S	3' - 0"	7' - 0"	1 3/4"	5	E/A602	H/A602	M/A606	23		OVER HEAD STOP

Architect / Engineer:

ea architecture
11576 South State Street, Suite 103b
Draper, Utah 84020

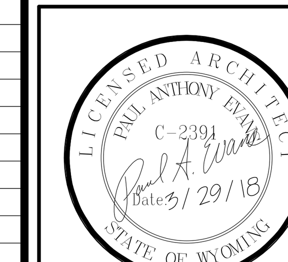

A New Granger 250 for
Evanston 3, 6, &
Evanston WY Stake
721 West Cheyenne Drive
Evanston Wyoming

Project for:
THE CHURCH OF
JESUS CHRIST
OF LATTER-DAY SAINTS

Mark	Date (D-M-Y)	Description
2	5/17/2018	Revision 2

Project Number: 18-02
Plan Series: G25-SC-17-03
Date: March 29, 2018

Sheet Title:
DOOR AND WINDOW SCHEDULES

18062NEW

Sheet:
A602

5/17/2018 2:03:10 PM

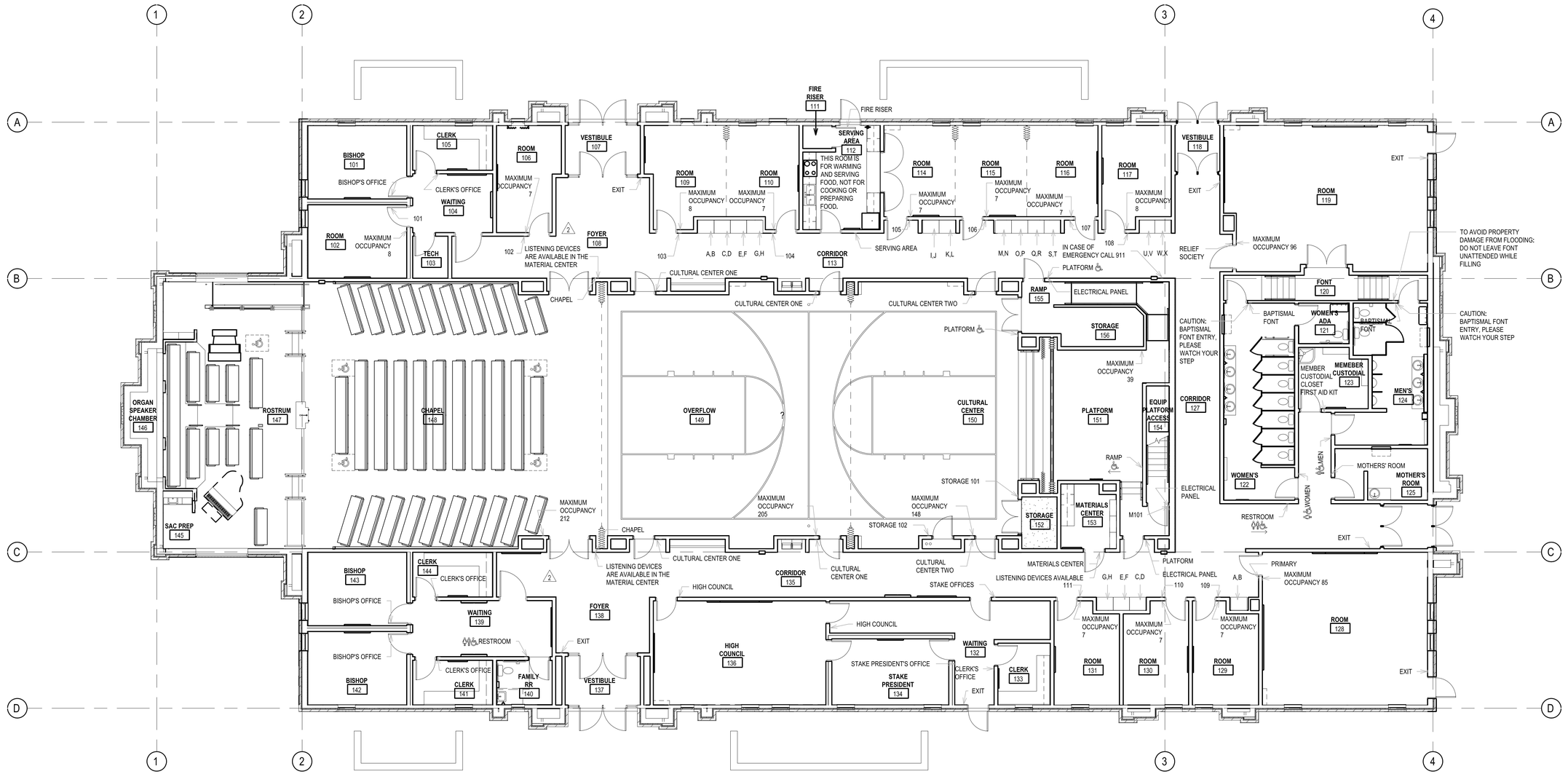

MAIN FLOOR SIGNAGE LOCATION PLAN 1 F102

1/8" = 1'-0"

Architect / Engineer:

ea architecture
11576 South State Street, Suite 103b
Draper, Utah 84020

LICENSED ARCHITECT
PAUL ANTHONY EVANS
C-2391
Date 5/30/18
STATE OF WYOMING

A New Granger 250 for
Evanston 3, 6, &
Evanston WY Stake
721 West Cheyenne Drive
Evanston Wyoming

Project for:
THE CHURCH OF
JESUS CHRIST
OF LATTER-DAY SAINTS

Mark	Date (D-M-Y)	Description
2	5/17/2018	Revision 2

Project Number:
18-02

Plan Series:
G25-SC-17-03

Date:
March 29, 2018

Sheet Title:
ROOM SIGNAGE AND LOCATION PLAN

18062NEW

Sheet:
F102

EQUIPMENT PLATFORM FRAMING PLAN NOTES:

1. SEE SHEATHING TYPE AND NAILING SCHEDULE ON SHEETS S604 FOR FLOOR SHEATHING AND NAILING REQUIREMENTS.
2. SEE ARCHITECTURAL FOR DIMENSIONS AND ELEVATIONS.
3. (3) TOP PLATES TO BE CONTINUOUS THROUGH OPENING. SEE 5/S524.
4. WHERE JOISTS ARE SPACED AT LESS THAN 24" O.C. SISTER (2) JOISTS WITH (3) 16d NAILS AT 16" O.C.
5. CONTRACTOR TO REFER TO THE ELECTRICAL DRAWINGS TO COORDINATE FRAMING LAYOUT WITH THE LIGHTING LAYOUT.
6. SHEATH INSIDE OF WALL BETWEEN GLULAMS FOR STABILITY OF BEAMS ABOVE.

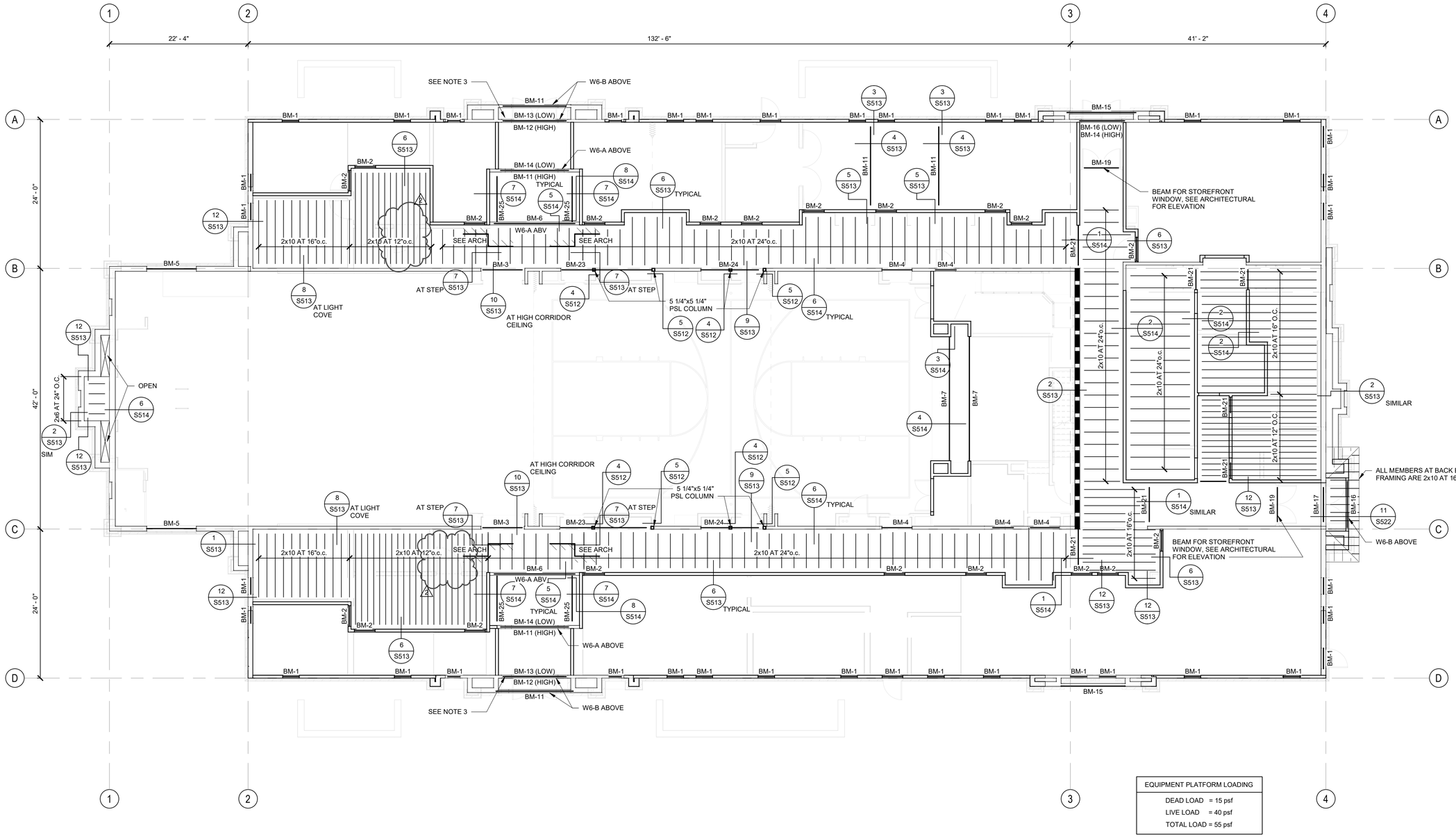

EQUIPMENT PLATFORM LOADING
DEAD LOAD = 15 psf
LIVE LOAD = 40 psf
TOTAL LOAD = 55 psf

EQUIPMENT PLATFORM FRAMING PLAN

SCALE : 1/8" = 1'-0"

A S104

Architect / Engineer:

ea architecture

11576 South State Street, Suite 103b
Draper, Utah 84020

Date: March 29, 2018

A New Granger 250 Meetinghouse for

Project Name
Evanston WY Stake

721 West Cheyenne Drive
Evanston Wyoming

Project for:
THE CHURCH OF
JESUS CHRIST
OF LATTER-DAY SAINTS

Mark	Date (DM-Y)	Description
2	May 17, 2018	Revision 2

Project Number: Project Number

Plan Series:

Date: Issue Date

Sheet Title: EQUIPMENT PLATFORM FRAMING PLAN

Sheet: S104

5/21/2018 1:59:32 PM

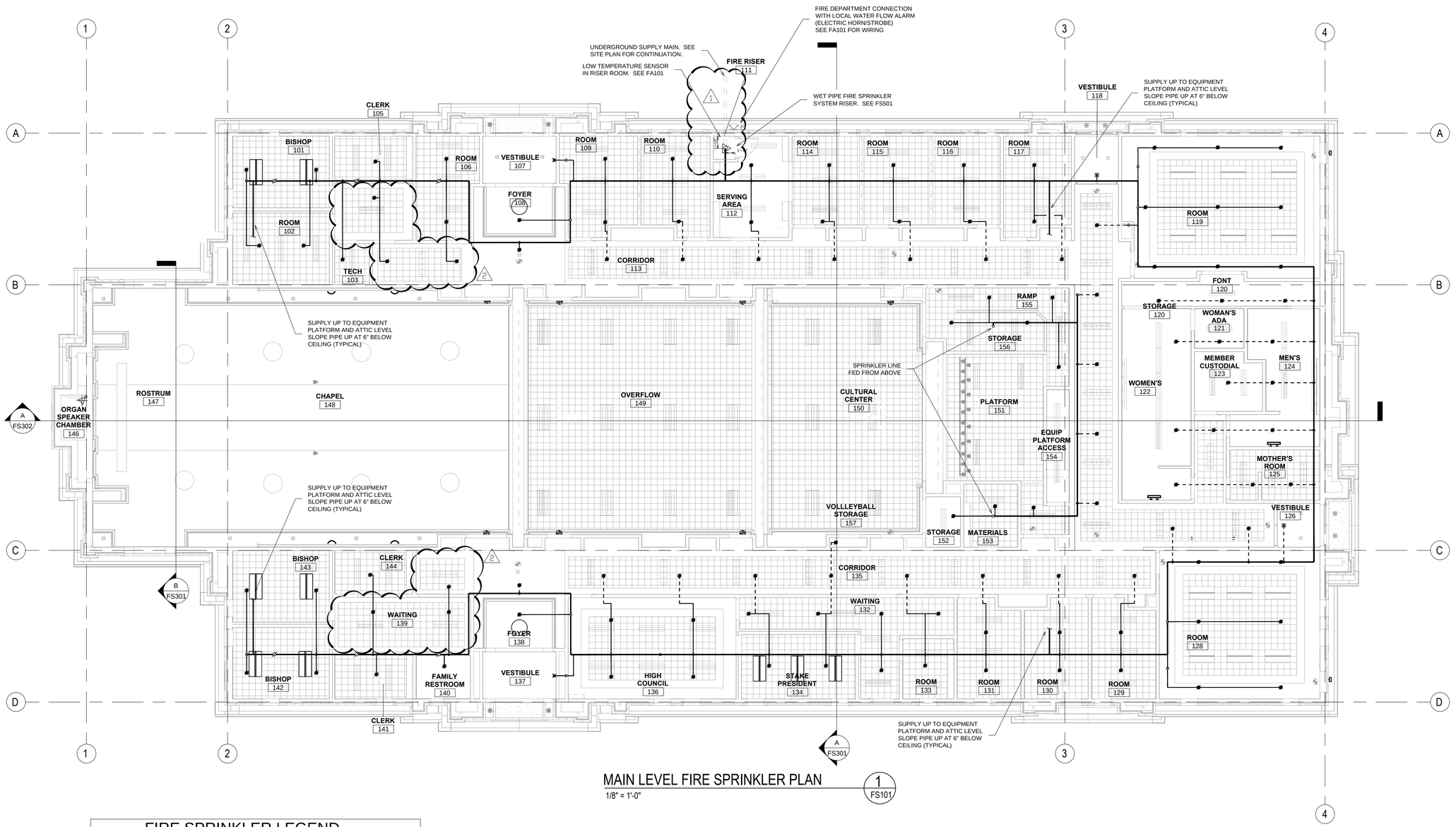

MAIN LEVEL FIRE SPRINKLER PLAN

1/8" = 1'-0"

1 FS101

FIRE SPRINKLER LEGEND

	UPRIGHT HEAD ON LINE		PRESSURE GAUGE
	CONCEALED PENDENT HEAD	LT	LOW TEMPERATURE SENSOR PROVIDED BY DIVISION 28
	CONCEALED DRY PENDENT HEAD	TS	VALVE TAMPER SWITCH
	SIDE DICHARGE ATTIC HEAD	FS	FLOW SWITCH
	DRY SIDEWALL HEAD RECESSED		FLEXIBLE COUPLING
	DRY SIDEWALL HEAD		SWAY BRACING
	SIDEWALL HEAD RECESSED		ANGLE VALVE
	SIDEWALL HEAD		PIPE SUPPORT
	TYCO MODEL AP ATTIC UPRIGHT HEAD		SPRINKLER PIPING
IT	INSPECTOR'S TEST VALVE		FIRE DEP. CONNECTION
	BALL VALVE 2" & SMALLER BUTTERFLY VALVE 2 1/2" & LARGER		PIPE IN FLOOR STRUCTURE
	PIPE UP / PIPE DOWN		

GENERAL NOTES

1. INSTALL FIRE PROTECTION PIPING AS SHOWN, WET-PIPE SYSTEM THROUGHOUT ALL AREAS OF THE BUILDING.
2. USE DRY-BARREL TYPE SPRINKLERS IN CANOPIES AND VESTIBULES WHEN SUPPLIED FROM WET SYSTEM.
3. OBTAIN APPROVAL FOR PIPING CHANGES FROM ARCHITECT AND ENGINEER.
4. RUN PIPING LEVEL OR SLOPED TO DRAIN AS DESIGNATED IN NFPA 13.
5. THE FIRE SPRINKLER SYSTEM SHALL BE DESIGNED PER THE REQUIREMENTS OF NFPA 13, LIGHT HAZARD FOR THE MAIN LEVEL AND ATTIC WITH THE EXCEPTION OF THE SERVING AREA, MECHANICAL, ELECTRICAL AND JANITOR AREAS WHICH SHALL BE DESIGNED AS ORDINARY HAZARD GROUP 1, AND THE EQUIPMENT PLATFORM THAT WILL BE DESIGNED AS ORDINARY HAZARD GROUP 2.
6. SPRINKLER HEAD SPACING:
   - 6.1. LIGHT HAZARD: 225 SQ. FT.
   - 6.2. ORDINARY HAZARD: 130 SQ. FT.
   - 6.3. ATTIC SPRINKLERS: PER HEAD LISTING.
   - 6.3. STANDARD SPRINKLERS IN ATTIC: 120 SQ. FT. PER HEAD.
7. SEE SITE PLAN FOR UTILITY CONNECTION AND LOCATION OF FIRE HYDRANTS AND POST INDICATING VALVE, IF REQUIRED BY THE AUTHORITY HAVING JURISDICTION.
8. DO NOT ROUTE PIPING THRU STRUCTURAL MEMBERS OR MECHANICAL DUCT WORK EXCEPT AS SHOWN ON THE DRAWINGS.
9. SEE REFLECTED CEILING PLAN FOR EXACT LOCATION OF SPRINKLER HEADS. SPRINKLER HEADS DO NOT HAVE TO BE CENTERED IN THE ONE FOOT ACOUSTICAL TILES.
10. COORDINATE WITH FRAMER FOR SHEAR-WALL PENETRATIONS.
11. ALL SPRINKLERS SHALL BE QUICK-RESPONSE TYPE.
12. ALL WET-PIPE SYSTEM COMPONENTS (EXCEPT DRY SPRINKLERS) SHALL BE INSIDE THE BUILDING INSULATION ENVELOPE.
13. ALL REQUIRED DRAINS SHALL FOLLOW NFPA 13 REQUIREMENTS. DRAIN VALVES SHALL BE LOCATED TO PREVENT PUBLIC ACCESS AND SHALL BE PIPED TO DISCHARGE OUTSIDE THE BUILDING.
14. PROVIDE FIRE SPRINKLERS UNDER CANOPIES, STAIRS, AND ROSTRUM ONLY IF REQUIRED BY THE LOCAL FIRE MARSHAL. SPRINKLERS ARE NOT REQUIRED WITHIN CANOPIES THAT ARE FILLED WITH NON-COMBUSTIBLE INSULATION.

evans + associates architecture
11576 south state street, suite 103a, draper, utah 84020
phone 801-553-9272 fax 801-553-9273

Stamp

Professional Engineer Registered State of Wyoming Thomas R. Hall 3/15/2018

A New Granger 250 Stake Center for:

Evanston 3, 6, & Evanston WY Stake

721 West Cheyenne Drive
Evanston, Wyoming

Project for:
THE CHURCH OF JESUS CHRIST OF LATTER-DAY SAINTS

Revisions		
Mark	Date	Description
1	4/4/18	REMOVED FIRE PUMP
2	5/17/18	REVISION 2

Project Number
18-02

Plan Series
Granger 250 SC (G25-SC-17-03)

Property Number
501092517010101

Date
March 29, 2018

Sheet Title
MAIN LEVEL FIRE SPRINKLER PLAN

Sheet
FS101

2/12/2018 3:51:44 PM

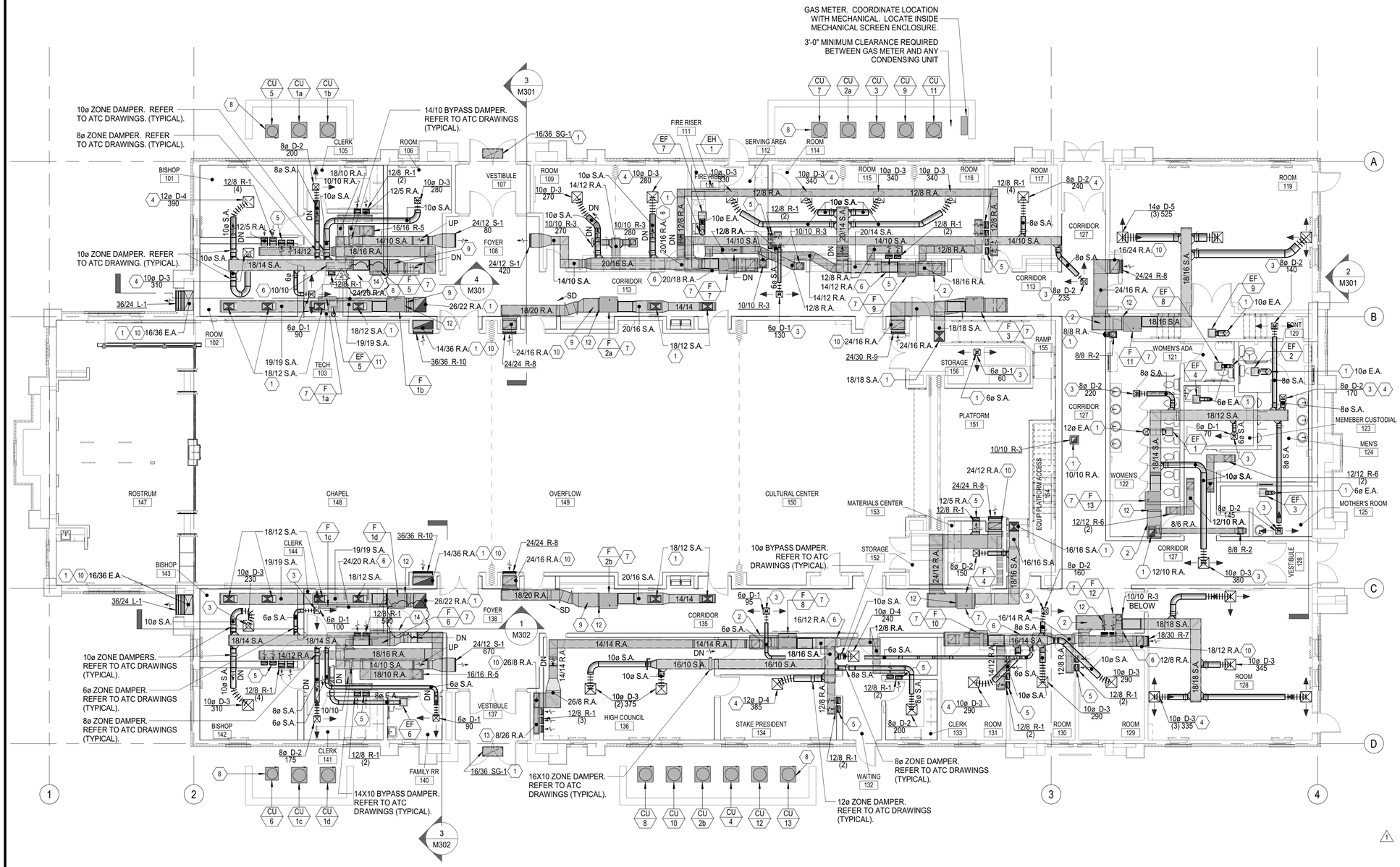

1 Mechanical Floor Plan

SCALE: 1/8" = 1'-0"

LEGEND

SYMBOL	DESCRIPTION	SYMBOL	DESCRIPTION	SYMBOL	DESCRIPTION
	BRANCH DUCT TAKE-OFF SEE DETAIL A/M502		BDD - (BACK DRAFT DAMPER)	SA	SUPPLY AIR
				RA	RETURN AIR AND RELIEF AIR TO ERV's
	SINGLE THICKNESS TURNING VANES		MANUAL VOLUME DAMPER	OA	OUTSIDE AIR
				TA	TRANSFER AIR
	DUCT TRANSITION		FLEX. CONNECTION 6'-0" MAX LENGTH - SEE DETAIL F/M502	FA	FRESH AIR (ERV LABEL)
				EA	EXHAUST AIR
	MOTORIZED DAMPER	SD-1	DUCT SMOKE DETECTOR. INSTALL 12x12 ACCESS DOOR AT ALL LOCATIONS	AF	ABOVE FLOOR
				SL UP	SLOPE UP OR DN

GENERAL NOTES

1. DRAWINGS SHOW GENERAL ARRANGEMENT OF PIPING, DUCTWORK, EQUIPMENT, ETC. FOLLOW AS CLOSELY AS ACTUAL BUILDING CONSTRUCTION AND WORK OF OTHER TRADES WILL PERMIT. BECAUSE OF THE SMALL SCALE OF THE DRAWINGS, IT IS NOT POSSIBLE TO INDICATE ALL OFFSETS, FITTINGS, AND ACCESSORIES THAT MAY BE REQUIRED. INVESTIGATE STRUCTURAL AND FINISH CONDITIONS AFFECTING THIS WORK AND ARRANGE WORK ACCORDINGLY. PROVIDE SUCH FITTINGS, VALVES, AND ACCESSORIES REQUIRED TO MEET CONDITIONS.
2. ALL DUCT DIMENSIONS SHOWN ARE CLEAR DIMENSIONS INSIDE DUCT LINER.
3. DO NOT USE LINER INSIDE RETURN AIR DUCT RISERS IN 2"X6" WALLS OF PERIMETER ROOMS.
4. WRAP ALL OUTSIDE AIR DUCTS WITH EXTERNAL INSULATION.
5. SEE ARCHITECTURAL REFLECTED CEILING PLAN FOR EXACT LOCATION OF GRILLES AND DIFFUSERS.
6. ALL PVC EQUIPMENT VENTS, PLUMBING VENTS, AND PENTHOUSE EXHAUST VENTS SHALL BE PAINTED TO MATCH ROOF COLOR.
7. MOUNT ALL DUCT SMOKE DETECTORS IN RETURN AIR STREAM ONLY. DO NOT MOUNT DOWNSTREAM OF MINIMUM OUTSIDE AIR CONNECTION.
8. DO NOT ROUTE PIPES ABOVE ELECTRICAL PANELS. MAINTAIN CLEAR ACCESS SPACE IN FRONT OF ALL ELECTRICAL PANELS 4'-0" DEEP AND 6'-6" HIGH.
9. SEE SHEET M102 FOR CONTINUATION OF ALL DUCT RISERS.
10. COORDINATE WITH NATURAL GAS PIPING MAIN. SEE SHEET P102.

KEYED NOTES

1. REFER TO SHEET M102 FOR CONTINUATION.
2. MIXED AIR PLENUM AT INLET TO FAN UNIT. FULL SIZE. TYPICAL OF ALL SYSTEMS.
3. INSTALL RIGID DUCT THROUGH FLOOR TO DIFFUSER. SEAL AT FLOOR PENETRATION.
4. ALL CEILING DIFFUSERS ARE 4-WAY BLOW UNLESS SHOWN OTHERWISE.
5. 12"x5" UNLINED RA DROP DOWN IN WALL TO R-1 RETURN AIR GRILLE. TYPICAL. REFER TO ARCHITECTURAL DETAILS FOR DUCT DROPS LOCATED IN ACOUSTICAL WALLS.
6. RA DUCT BELOW.
7. REFER TO DETAILS A, B, AND D SHEET M503. TYPICAL.
8. COMPRESSOR UNIT. PROVIDE MINIMUM 2'-0" CLEAR ALL AROUND. PROVIDE 30" MINIMUM CLEARANCE AT SERVICE SIDE. REFER TO SHEET M501 FOR REFRIGERANT PIPING SCHEME AND DETAILS. TYPICAL FOR ALL UNITS.
9. DUCT SIZE TO MATCH FAN UNIT RA CONNECTION SIZE.
10. DUCT DROP IN CHASE.
11. EXHAUST FAN IS LOCATED BELOW FAN UNIT F/1a.
12. REFER TO DETAIL G/M502 FOR EXTERNAL FILTER SECTION. TYPICAL OF ALL HORIZONTAL FAN SYSTEMS.
13. HORIZONTAL 8'x26" RA DUCT AT BOTTOM OF CHASE.
14. PROVIDE DOOR GRILLE, DG-1 HERE. SEE GRILLE SCHEDULE ON SHEET M602.

Architect / Engineer:

ea architecture
11576 South State Street, Suite 103b
Draper, Utah 84020

Professional Engineer (Mechanical)
Kirk S. Wilcox
9087
Date 3/29/2018
WYOMING

A New Granger 250 Meetinghouse for

Evanston 3, 6, &
Evanston WY Stake

700 West Cheyenne Drive
Evanston Wyoming

Project for:
THE CHURCH OF
JESUS CHRIST
OF LATTER-DAY SAINTS

Mark	Date (D-M-Y)	Description
1	05-04-18	Water Main Revisions
2	05-21-18	Revision 2

Project Number: 18-02
Plan Series: G25-SC-17-03
Date: March 29, 2018

Sheet Title: MECHANICAL FLOOR PLAN

18062NEW

Sheet: M101

VAN BOERUM & FRANK ASSOCIATES, INC.
CONSULTING ENGINEERS
WWW.VBFA.COM
Salt Lake City · Logan · St. George · Tempe
330 South 300 East 801.530.3148 T
Salt Lake City, UT 84111 801.530.3150 F
VBFA Project Number: 18051

5/21/2018 2:43:04 PM

DIFFUSER SCHEDULE (2) (4)

MARK	C.F.M. RANGE (1)	DIFFUSER SIZE	NECK CONN.	BLOW	PATTERN	AIR DIST./SIDE A (%)	AIR DIST./SIDE B (%)
D-1 -	60 - 120	6X6	6"Ø	4 WAY UNLESS NOTED ON M101	4 WAY UNLESS NOTED ON M101	--	--
D-2 -	125 - 240	9X9	8"Ø	4 WAY UNLESS NOTED ON M101	4 WAY UNLESS NOTED ON M101	--	--
D-3 -	245 - 380	12X12	10"Ø	4 WAY UNLESS NOTED ON M101	4 WAY UNLESS NOTED ON M101	--	--
D-4 -	385 - 470	12X12	12"Ø	4 WAY UNLESS NOTED ON M101	4 WAY UNLESS NOTED ON M101	--	--
D-5 -	475 - 640	15X15	14"Ø	4 WAY UNLESS NOTED ON M101	4 WAY UNLESS NOTED ON M101	--	--
D-6 -	675 - 900	15X21	15X21	3 WAY	A / B	35	33

REGISTER,LOUVER & GRILLE SCHEDULE

MARK	T Y P E	SERVICE	CFM RANGE (1)	NOMINAL SIZE	REMARKS (3)
R-1	SIDEWALL (5) (6)	RA	100-250	12X8	SERVICED BY 12X5 UNLINED R.A. DUCT IN WALL (10)
R-2	CEILING (4)	RA	60-220	8X8	
R-3	CEILING (4)	RA	225-350	10X10	
R-4	CEILING (4)	RA	355-520	12X12	
R-5	CEILING (4)	RA	525-850	16X16	
R-6	CEILING (4)	TRANSFER AIR	250-500	12X12	
R-7	SIDEWALL (5) (6)	RA	1350	18X30	(10) (14)
R-8	SIDEWALL (5) (6)	RA	1140-1575	24X24	(10) (14)
R-9	SIDEWALL (5) (6)	RA	1800	24X30	(10) (14)
R-10	SIDEWALL (5) (6)	RA	2700	36X36	(10) (14)
S-1	SIDEWALL (5) (6)	SA	80-670	24X12 (16)	(4) (9)
SG-1	SOFFIT	OA	1555-1595	36X16	(12)
L-1	LOUVER	EA	1350-1625	36X24	(8) (12) (15)
L-2	LOUVER	OA	1810-2230	60X36	(8) (11) (12)
L-3	LOUVER	EA	3545	30X68	(8) (12) (15) (17)
L-4	LOUVER	ARCHITECT	N/A	12X12	(8) (12) (13)
DG-1	DOOR GRILLE	TRANSFER AIR	N/A	24X24	(10) (11)

EXHAUST FAN SCHEDULE (2) (3)

MARK	S E R V E S R O O M	MIN. (1) A.C.F.M.	STATIC PRESSURE IN. W.G.	WATTS	R E M A R K S
EF 1	WOMEN'S RESTROOM 122	490	0.375	330W	PROVIDE BACK-DRAFT DAMPER
EF 2	MEN'S RESTROOM 124	350	0.375	250W	PROVIDE BACK-DRAFT DAMPER
EF 3	MOTHER'S ROOM 125	70	0.375	81W	PROVIDE BACK-DRAFT DAMPER
EF 4	CUSTODIAN 123	75	0.375	100W	PROVIDE BACK-DRAFT **DAMPER**
EF 5	TECHNOLOGY 103	150	0.375	130W	PROVIDE BACK-DRAFT DAMPER (4)
EF 6	RESTROOM 140	70	0.375	81W	PROVIDE BACK-DRAFT DAMPER
EF 7	SERVING AREA 112	200	0.50	166W	PROVIDE BACK-DRAFT DAMPER
EF 8	WOMEN'S ADA RESTROOM 121	70	0.375	81W	PROVIDE BACK-DRAFT DAMPER
EF 9	FONT 120	200	0.375	166W	PROVIDE BACK-DRAFT DAMPER

(1) SET BALANCE DAMPERS SHOWN ON M101 TO CFM LISTED

(2) CONTROL BY DIVISION 26.

(3) VOLTAGE IS 115V/1 PHASE/60HZ

(4) LINE VOLTAGE THERMOSTAT CONTROL. ACCESSORY THERMOSTAT BY DIV. 23, INSTALLED BY DIV. 26.

REGISTER, LOUVER AND DIFFUSER SCHEDULE NOTES:

(1) MAXIMUM NC=25 @ MAXIMUM CFM NOTED.

(2) SHALL BE TITUS TDC TYPE 6 OR EQUAL BY OTHER APPROVED MANUFACTURERS. (SEE SPECIFICATIONS)

(3) SEE SPECIFICATIONS FOR APPROVED MANUFACTURERS.

(4) FINISH SHALL BE OFF-WHITE BAKED ENAMEL.

(5) BAKED ENAMEL FINISH WITH COLOR AS DIRECTED BY ARCHITECT.

(6) RETURN AIR GRILLE TO BE MOUNTED 8" FROM FLOOR TO BOTTOM EDGE OF GRILLES.

(7) BAKED ENAMEL FINISH TO MATCH ROOF COLOR OR COLOR AS DIRECTED BY ARCHITECT.

(8) PROVIDE ALUMINUM BIRD SCREEN OR INSECT SCREEN. SEE SPECIFICATIONS.

(9) SET REGISTER BLADES FOR 15° UPWARD DEFLECTION.

(10) BLADE ORIENTATION SHALL BE HORIZONTAL

(11) MAX. ACCEPTABLE FACE VELOCITY THROUGH NET FREE AREA: 400 FT/MIN.

(12) FINISH COLOR AS DIRECTED BY ARCHITECT, TO MATCH SURROUNDING SURFACE FINISH.

(13) ON STORAGE BUILDING. NOT CONNECTED TO DUCTWORK. SEE ELEVATION F/C801.

(14) REFER TO DETAIL E/M503 FOR GRILLE INSTALLATION.

(15) MAX. ACCEPTABLE FACE VELOCITY THROUGH NET FREE AREA: 600 FT/MIN.

(16) OVERSIZED FOR BY-PASS OUTLET AT SYSTEM F-5.

(17) SEE ARCHITECTURAL ELEVATIONS FOR EXACT DIMENSIONS AND SHAPE.

VAN BOERUM & FRANK ASSOCIATES, INC.
CONSULTING ENGINEERS
WWW.VBFA.COM
Salt Lake City · Logan · St. George · Tempe
330 South 300 East 801.530.3148 T
Salt Lake City, UT 84111 801.530.3150 F
VBFA Project Number: 18051

Architect / Engineer:
ea architecture
11576 South State Street, Suite 103b
Draper, Utah 84020

Professional Engineer (Mechanical) Kirk B. Wickers 9087 WYOMING Date 3/29/2018

A New Granger 250 Meetinghouse for
Evanston 3, 6, & Evanston WY Stake
700 West Cheyenne Drive
Evanston Wyoming

Project for:
THE CHURCH OF JESUS CHRIST OF LATTER-DAY SAINTS

Mark	Date (D-M-Y)	Description
2	05-21-18	Revision 2

Project Number: 18-02
Plan Series: G25-SC-17-03
Date: March 29, 2018

Sheet Title: MECHANICAL SCHEDULES

18062NEW

Sheet: M602

5/21/2018 2:43:04 PM