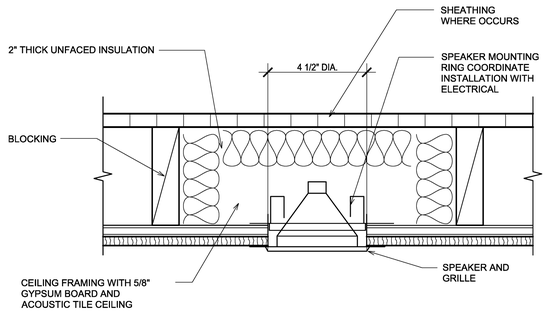

A 4" SPEAKER ENCLOSURE DETAIL
3" = 1'-0"

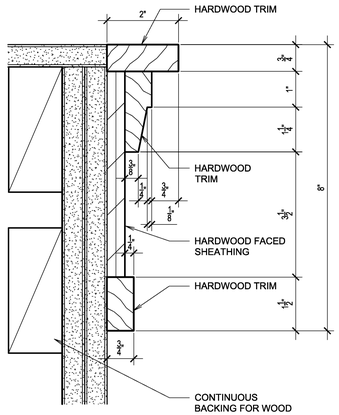

F TRIM DETAIL
6" = 1'-0"

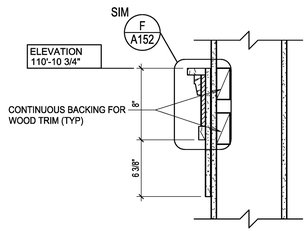

G TRIM DETAIL
1 1/2" = 1'-0"

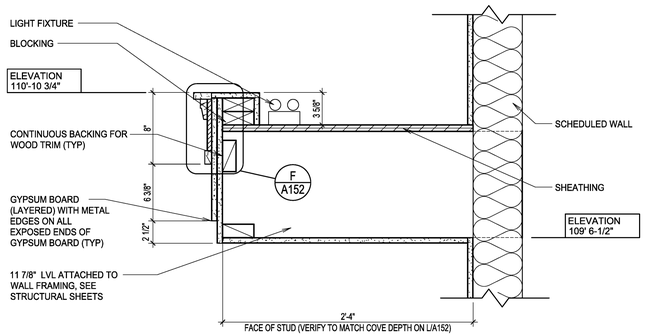

K LIGHT COVE
1 1/2" = 1'-0"

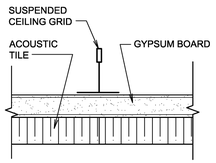

ACOUSTIC TILE ON GYPSUM BOARD SUSPENDED CEILING SYSTEM
6" = 1'-0"

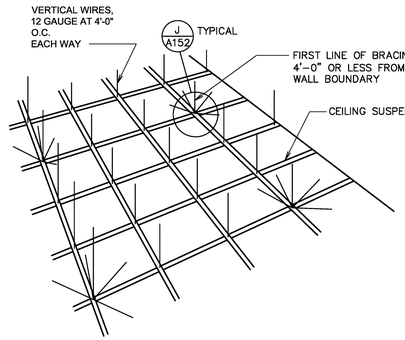

H CEILING SUSPENSION DETAIL
SCALE: NONE

DETAIL NOTES:
1. SPLAY WIRE BRACING AND COMPRESSION POSTS/STRUTS ARE ONLY REQUIRED IN SEISMIC DESIGN CATEGORIES D, E, F.
2. AREAS SMALLER THAN 1000 SQ. FT. AND WITH WALLS ON FOUR SIDES EXTENDING TO THE STRUCTURE NEED NOT HAVE SPLAY WIRE REINFORCING. BOUNDARY WALLS MUST BE BRACED TOP AND BOTTOM INDEPENDENT OF CEILING TO QUALIFY.
3. SEISMIC CLIP IS REQUIRED IN SEISMIC DESIGN CATEGORIES D, E AND F.
4. THE 2" HORIZONTAL LEG ON WALL MOLDING IS REQUIRED ONLY IN SEISMIC DESIGN CATEGORIES D, E AND F. WITH CC-ES EVALUATION REPORT, A 7/8" LEG WOULD BE ACCEPTABLE WITH PROPER SEISMIC CLIP.

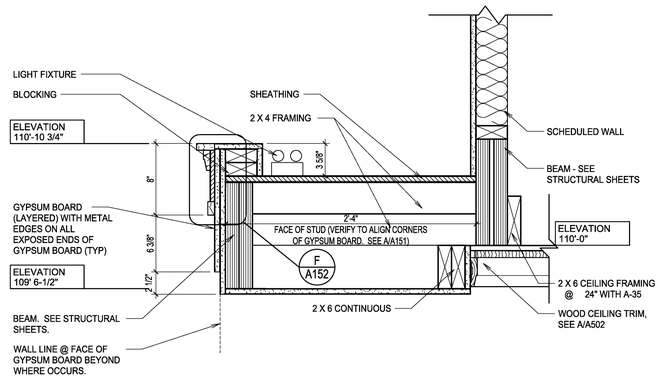

L LIGHT COVE
1 1/2" = 1'-0"

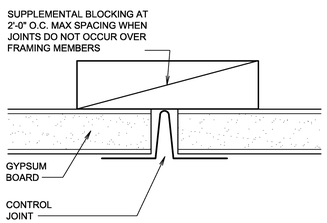

D CONTROL JOINT
1'-0" = 1'-0"

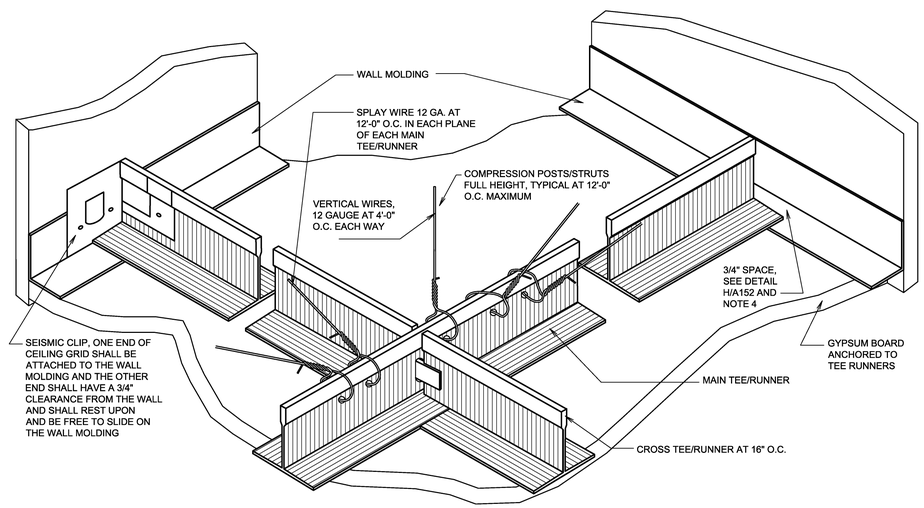

J CEILING SUSPENSION DETAIL
SCALE: NONE

evans + associates architecture
11576 south state street, suite 103b, draper, utah 84020
phone 801-333-8272 fax 801-333-8273

Stamp

LICENSED ARCHITECT
PAUL ANTHONY EVANS
273770
STATE OF UTAH

A New 8-Room Seminary for:

Herriman UT Mtn View Seminary
US Utah Salt Lake Valley South S&I Area

14002 Autumn Crest Blvd
Herriman, Utah

Project for:
THE CHURCH OF JESUS CHRIST OF LATTER-DAY SAINTS

Revisions	Mark	Date	Description

Project Number
18-20
Plan Series
SEM18-08-1
Property Number
501341917010101
Date
June 1, 2018

Sheet Title
CEILING DETAILS

Sheet
A152

NOTE:
Detail callouts and notations shown here are typical at all brick features.

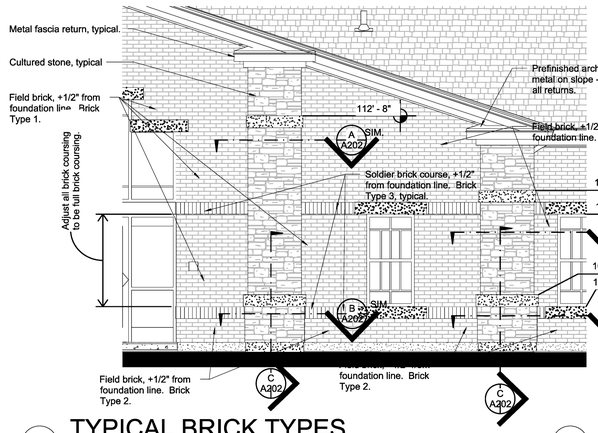

A TYPICAL BRICK TYPES

SCALE: 1/4" = 1'-0"

NOTE:
Brick expansion joints shall be 3/8" joints with backer rod and sealant to match mortar color. Expansion joints shall be full depth of brick veneer and shall not be saw-cut. Locate brick expansion joints where shown on the elevations.

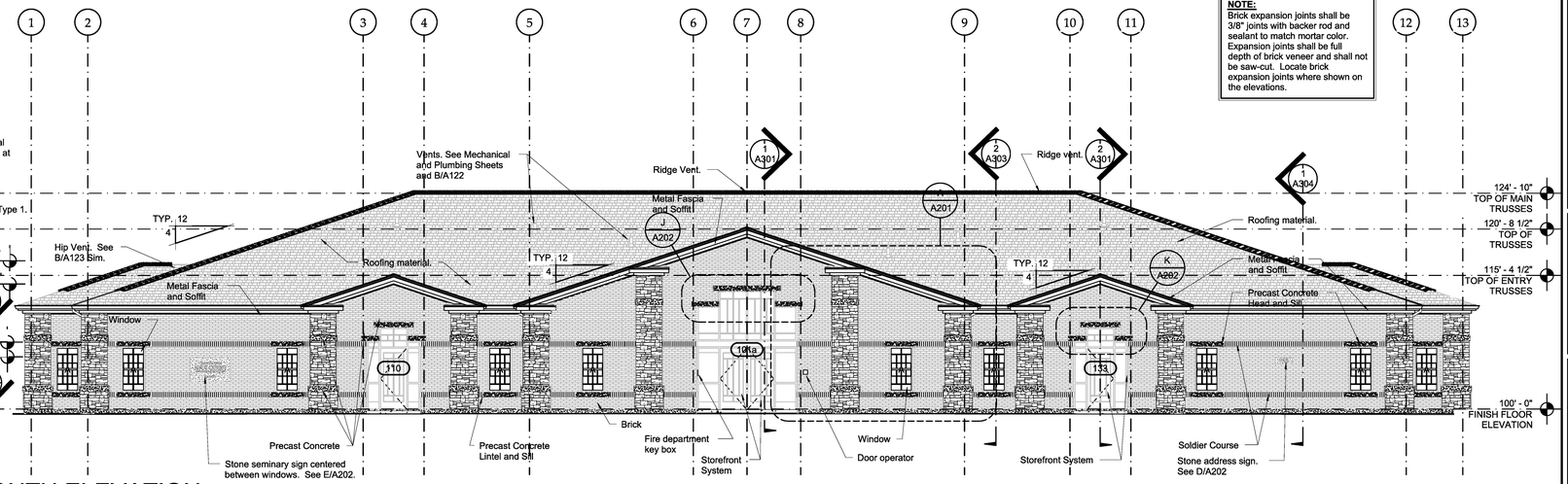

1 SOUTH ELEVATION

SCALE: 1/8" = 1'-0"

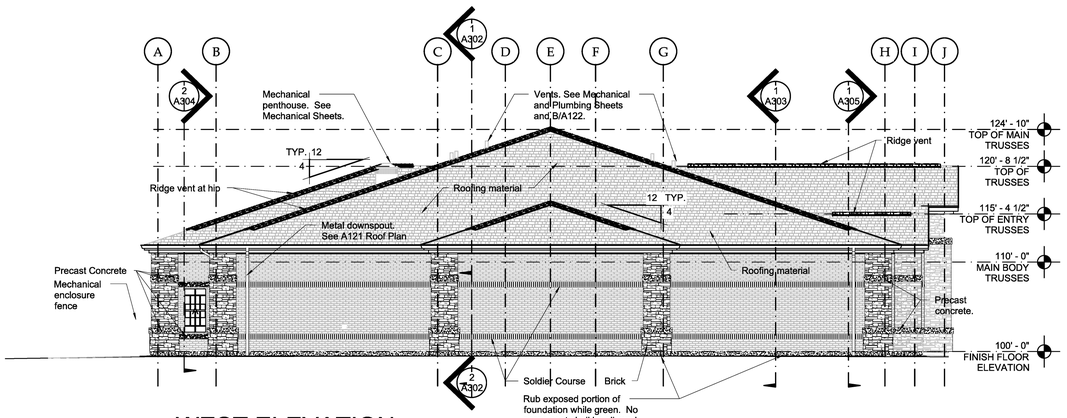

2 WEST ELEVATION

SCALE: 1/8" = 1'-0"

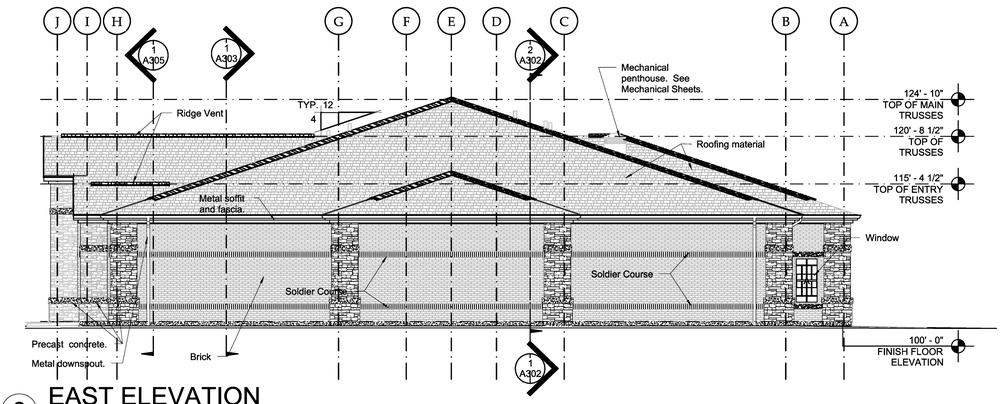

3 EAST ELEVATION

SCALE: 1/8" = 1'-0"

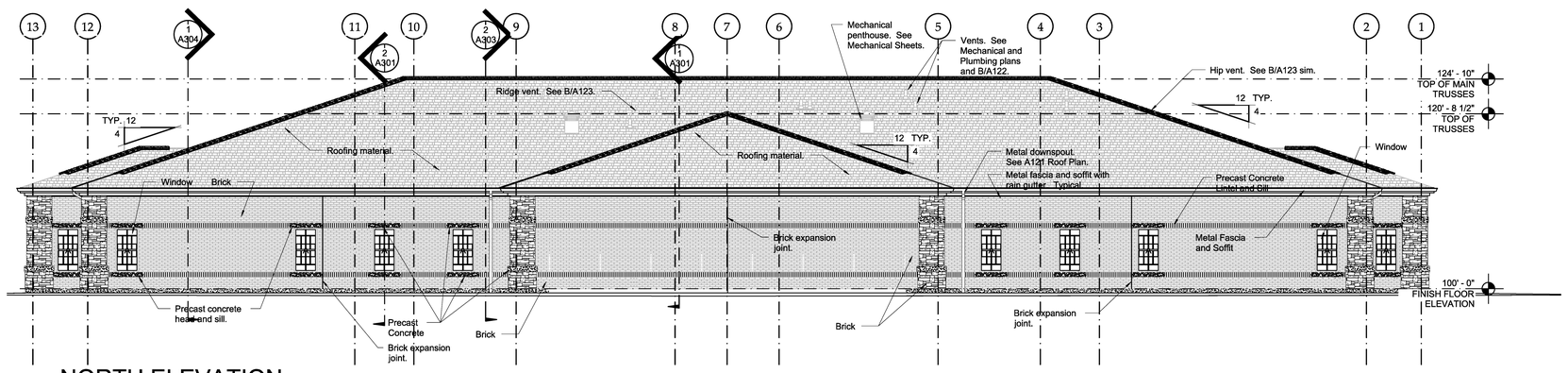

4 NORTH ELEVATION

SCALE: 1/8" = 1'-0"

evans + associates architecture
11576 south state street, suite 103b, draper, utah 84020
phone 801-553-8272
fax 801-553-8273

Stamp

LICENSED ARCHITECT
PAUL ANTHONY EVANS
273770
STATE OF UTAH

A New 8-Room Seminary for:

Herriman UT Mtn View Seminary
US Utah Salt Lake Valley South S&I Area

14002 Autumn Crest Blvd
Herriman, Utah

Project for:

THE CHURCH OF JESUS CHRIST OF LATTER-DAY SAINTS

Revisions		
Mark	Date	Description

Project Number
18-20

Plan Series
SEM18-08-1

Property Number
501341917010101

Date
June 1, 2018

Sheet Title

EXTERIOR ELEVATIONS

Sheet

A201

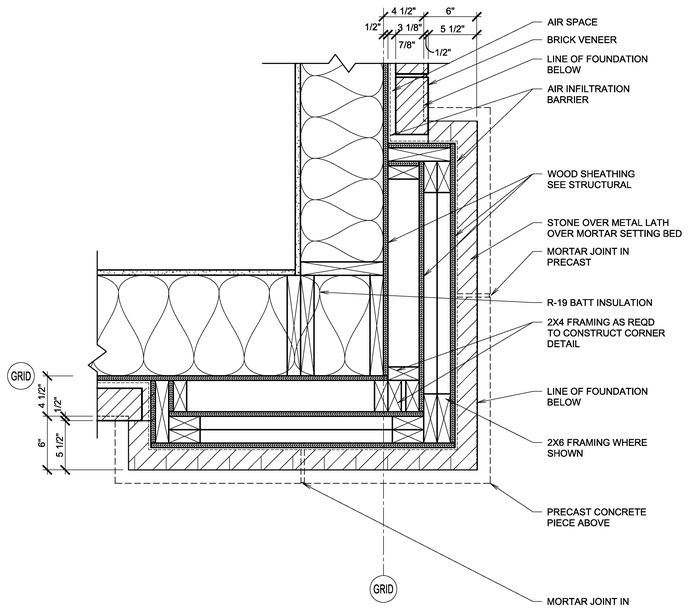

A BRICK CORNER DETAIL AT BASE
1 1/2"" = 1'-0"

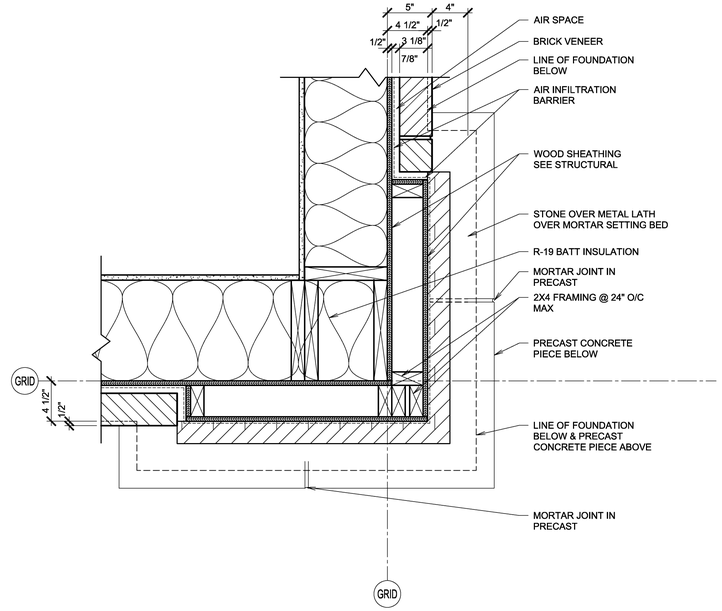

B BRICK CORNER DETAIL
1 1/2"" = 1'-0"

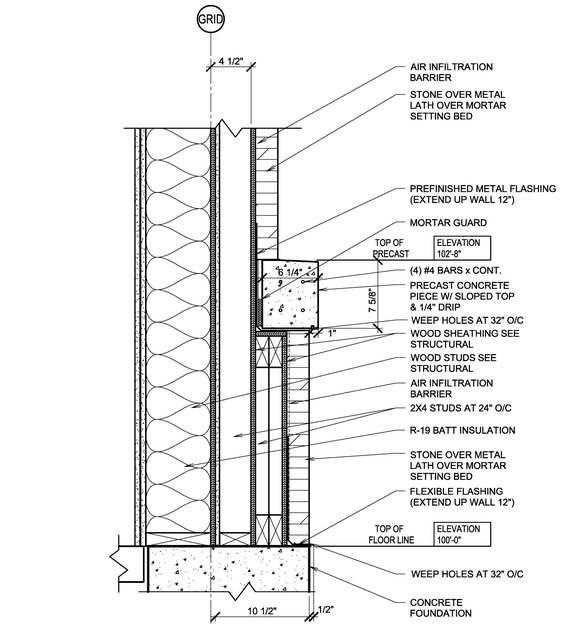

C PLINTH DETAIL
1 1/2" = 1'-0"

D SIGN ELEVATION - ADDRESS
1 1/2" = 1'-0"

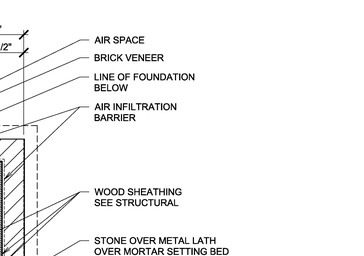

E SIGN ELEVATION - SEMINARY
3/4" = 1'-0"

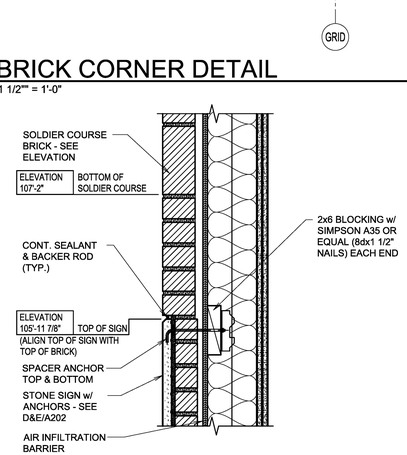

F SECTION AT SEMINARY SIGN
1 1/2" = 1'-0"

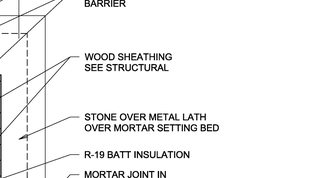

G BRICK CORNER DETAIL
1 1/2" = 1'-0"

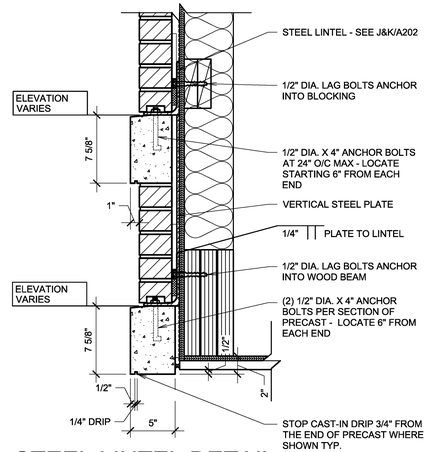

H STEEL LINTEL DETAIL
1 1/2" = 1'-0"

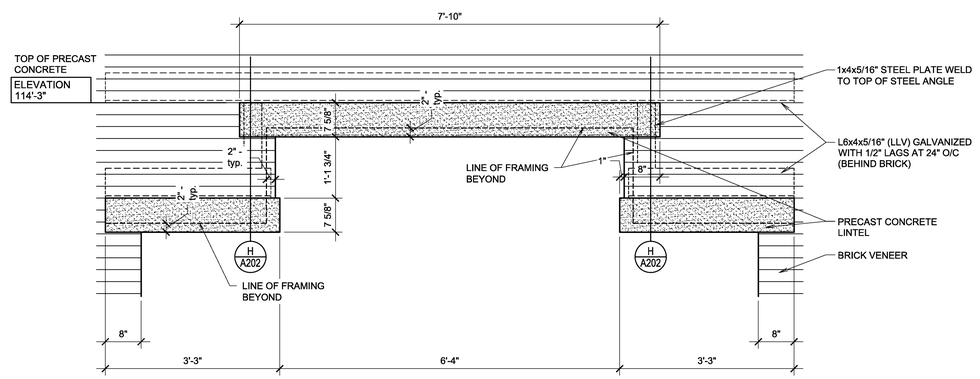

J MAIN ENTRY LINTEL ELEVATION
3/4" = 1'-0"

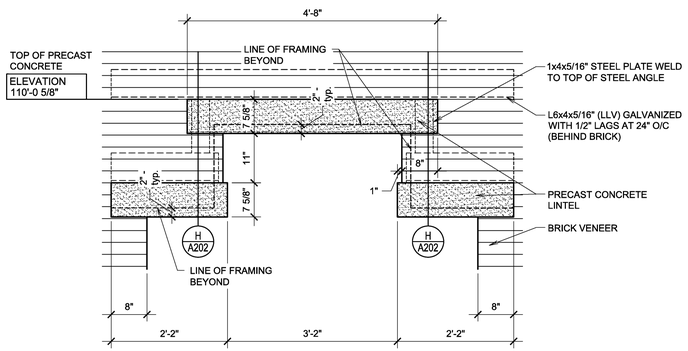

K SIDE ENTRY LINTEL ELEVATION
3/4" = 1'-0"

evans + associates architecture
11576 south state street, suite 103b, draper, utah 84020
phone 801-333-8273 fax 801-333-8273

Stamp

LICENSED ARCHITECT
PAUL ANTHONY EVANS
273770
STATE OF UTAH

A New 8-Room Seminary for:

Herriman UT Mtn View Seminary
US Utah Salt Lake Valley South S&I Area

14002 Autumn Crest Blvd
Herriman, Utah

Project for:
THE CHURCH OF JESUS CHRIST OF LATTER-DAY SAINTS

Revisions		
Mark	Date	Description

Project Number 18-20
Plan Series SEM18-08-1
Property Number 501341917010101
Date June 1, 2018

Sheet Title
BUILDING EXTERIOR DETAILS

Sheet
A202

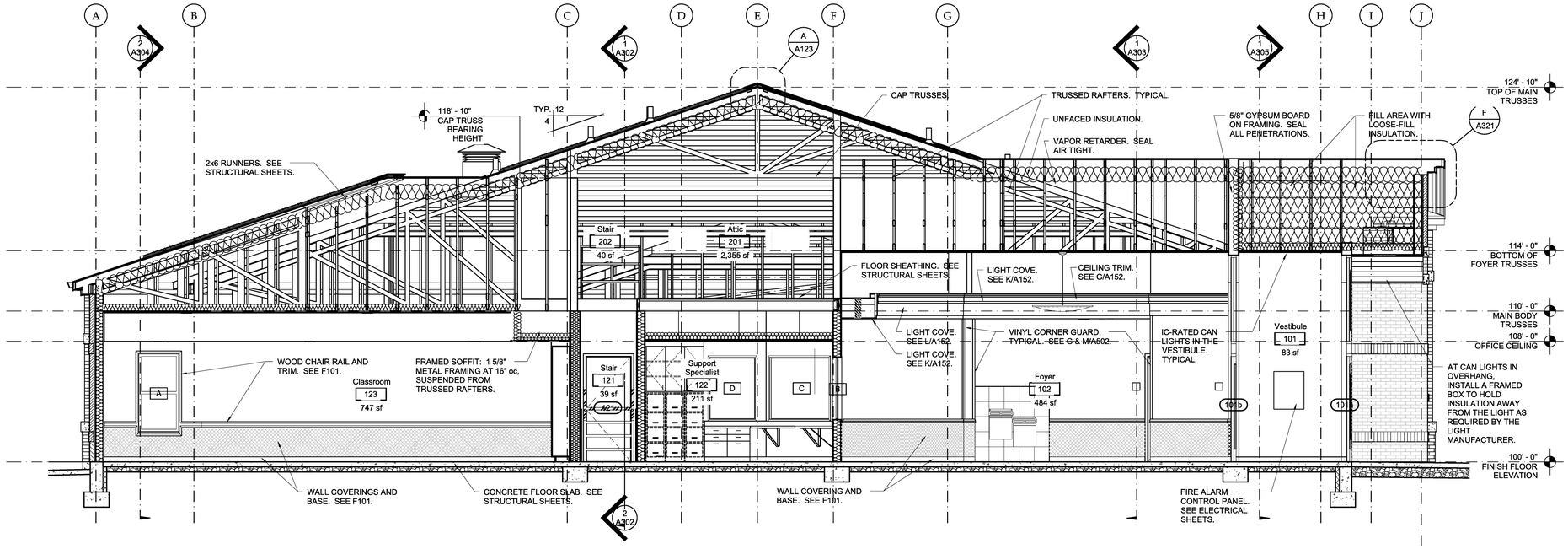

1 SECTION

SCALE: 1/4" = 1'-0"

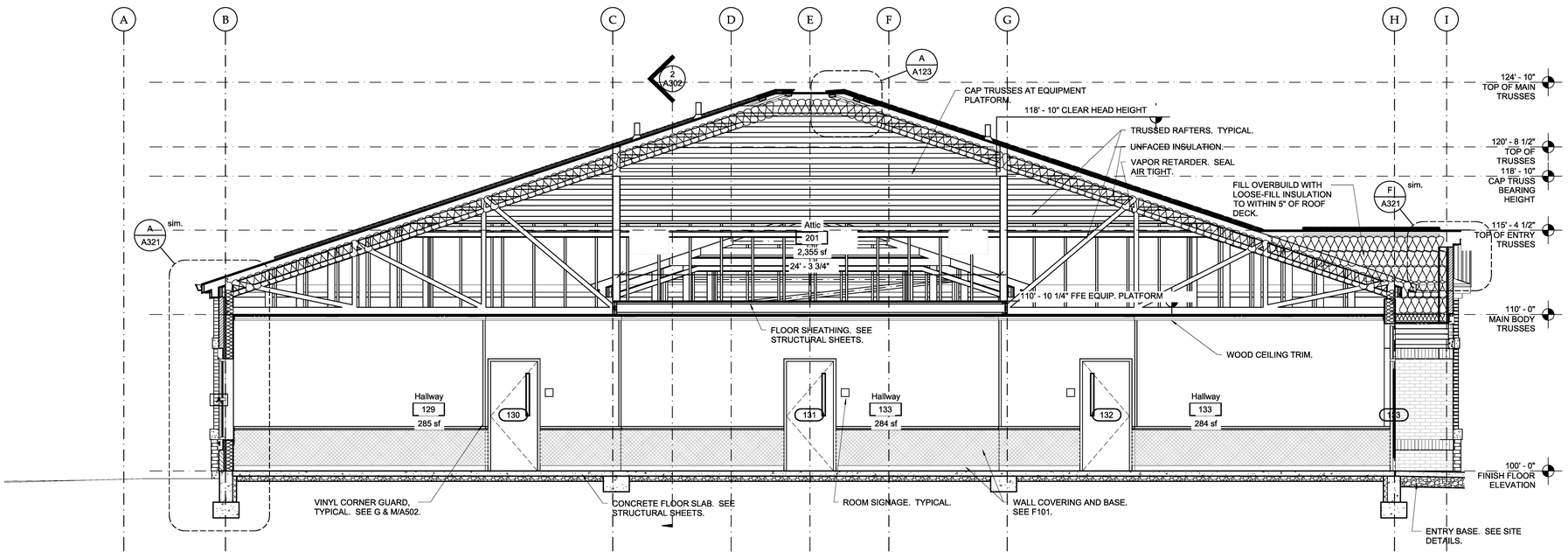

2 SECTION

SCALE: 1/4" = 1'-0"

evans + associates architecture
11576 south state street, suite 103b, draper, utah 84020
phone 801-333-8272 fax 801-333-8273

Stamp

LICENSED ARCHITECT
PAUL ANTHONY EVANS
273770
STATE OF UTAH

A New 8-Room Seminary for:

Herriman UT Mtn View Seminary
US Utah Salt Lake Valley South S&I Area

14002 Autumn Crest Blvd
Herriman, Utah

Project for:

THE CHURCH OF JESUS CHRIST OF LATTER-DAY SAINTS

Revisions			
Mark	Date	Description	

Project Number 18-20
Plan Series SEM18-08-1
Property Number 501341917010101
Date June 1, 2018

Sheet Title

BUILDING SECTIONS

Sheet

A301

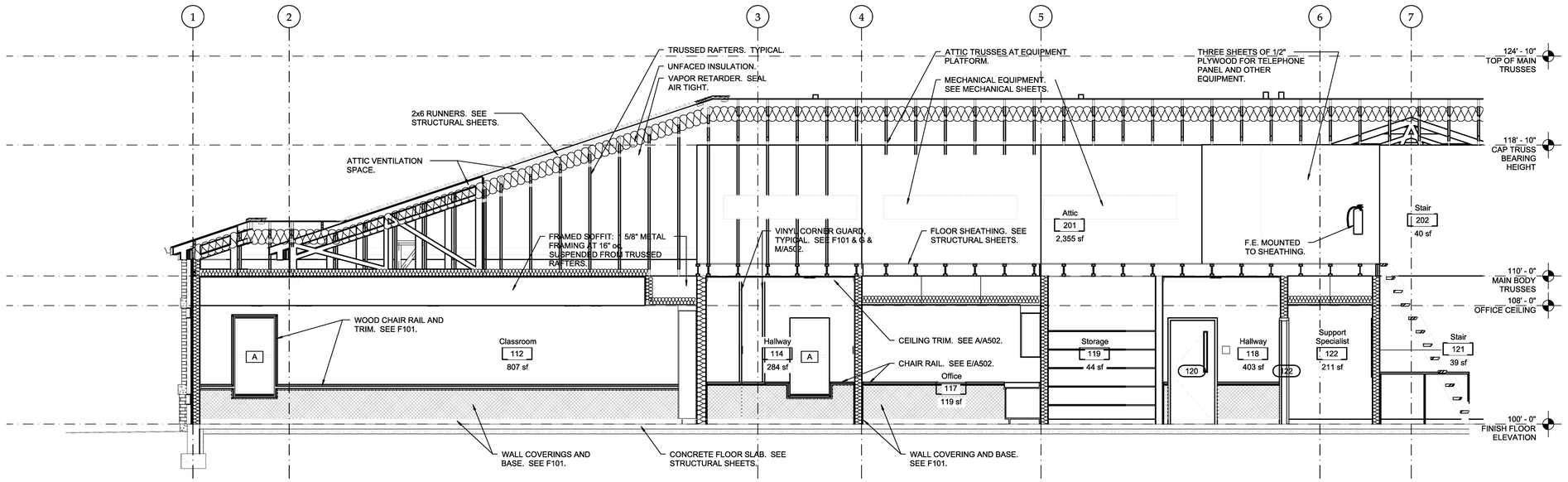

1 SECTION

SCALE: 1/4" = 1'-0"

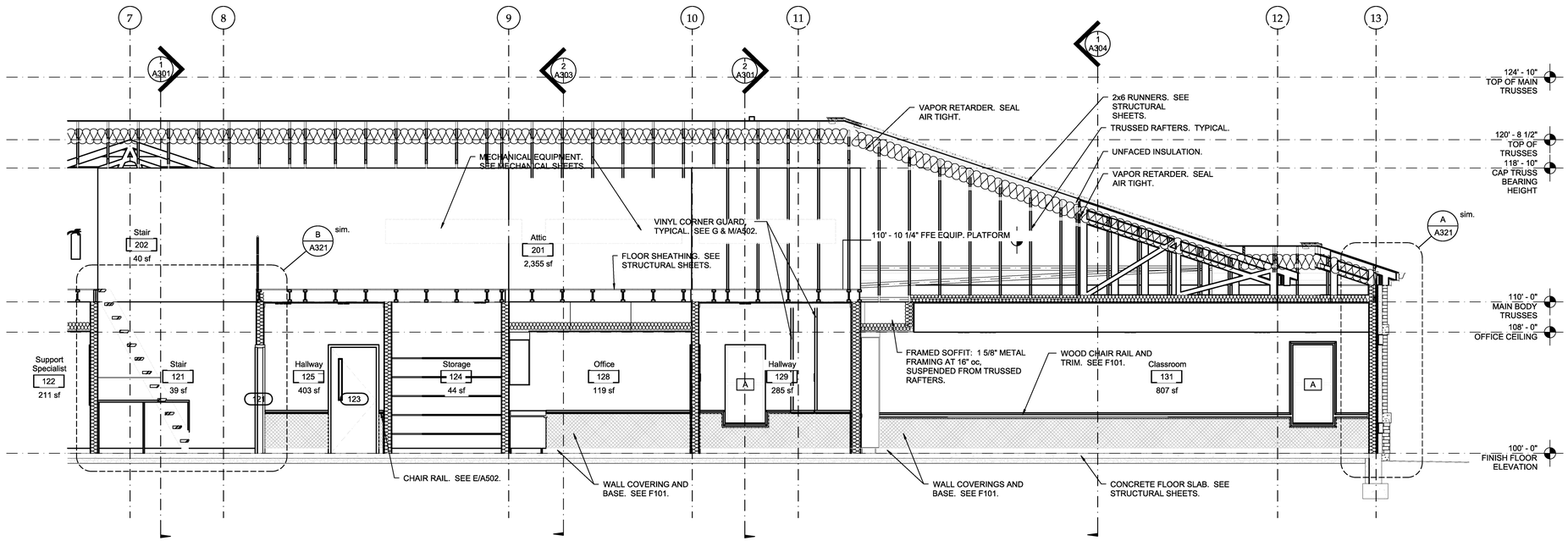

2 SECTION

SCALE: 1/4" = 1'-0"

evans + associates architecture
11576 south state street, suite 103b, draper, utah 84020
phone 801-333-8272
fax 801-333-8273

Stamp

LICENSED ARCHITECT
PAUL ANTHONY EVANS
273770
STATE OF UTAH

A New 8-Room Seminary for:

Herriman UT Mtn View Seminary
US Utah Salt Lake Valley South S&I Area

14002 Autumn Crest Blvd
Herriman, Utah

Project for:
THE CHURCH OF JESUS CHRIST OF LATTER-DAY SAINTS

Revisions

Mark	Date	Description

Project Number 18-20
Plan Series SEM18-08-1
Property Number 501341917010101
Date June 1, 2018

Sheet Title
BUILDING SECTIONS

Sheet
A302

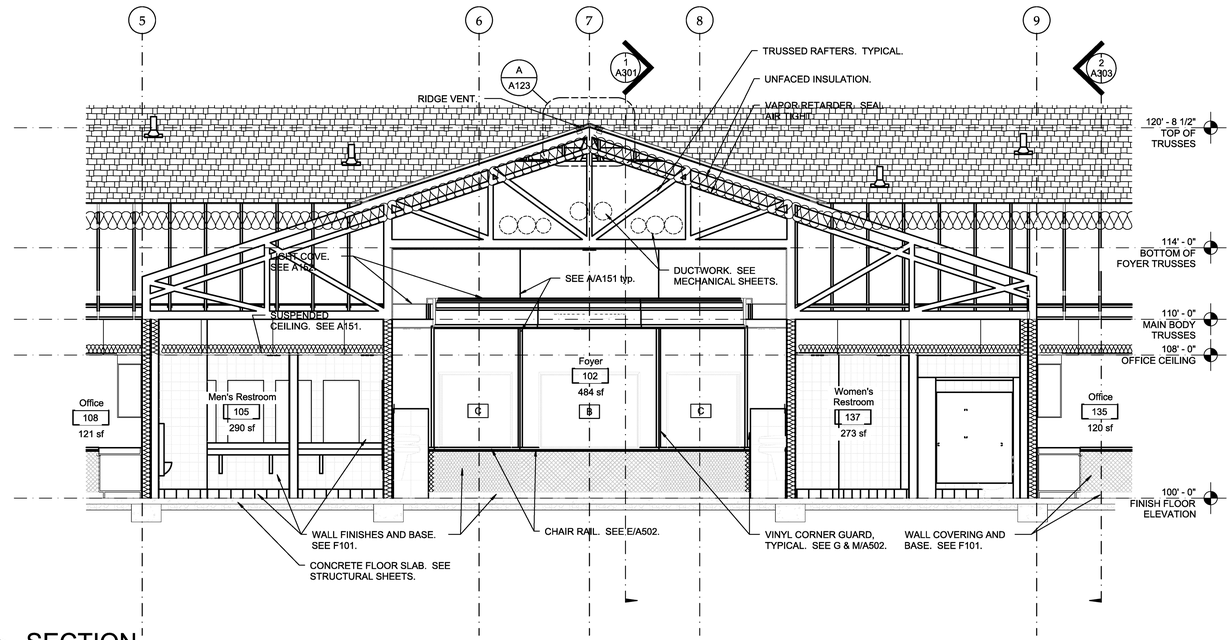

1 SECTION

SCALE: 1/4" = 1'-0"

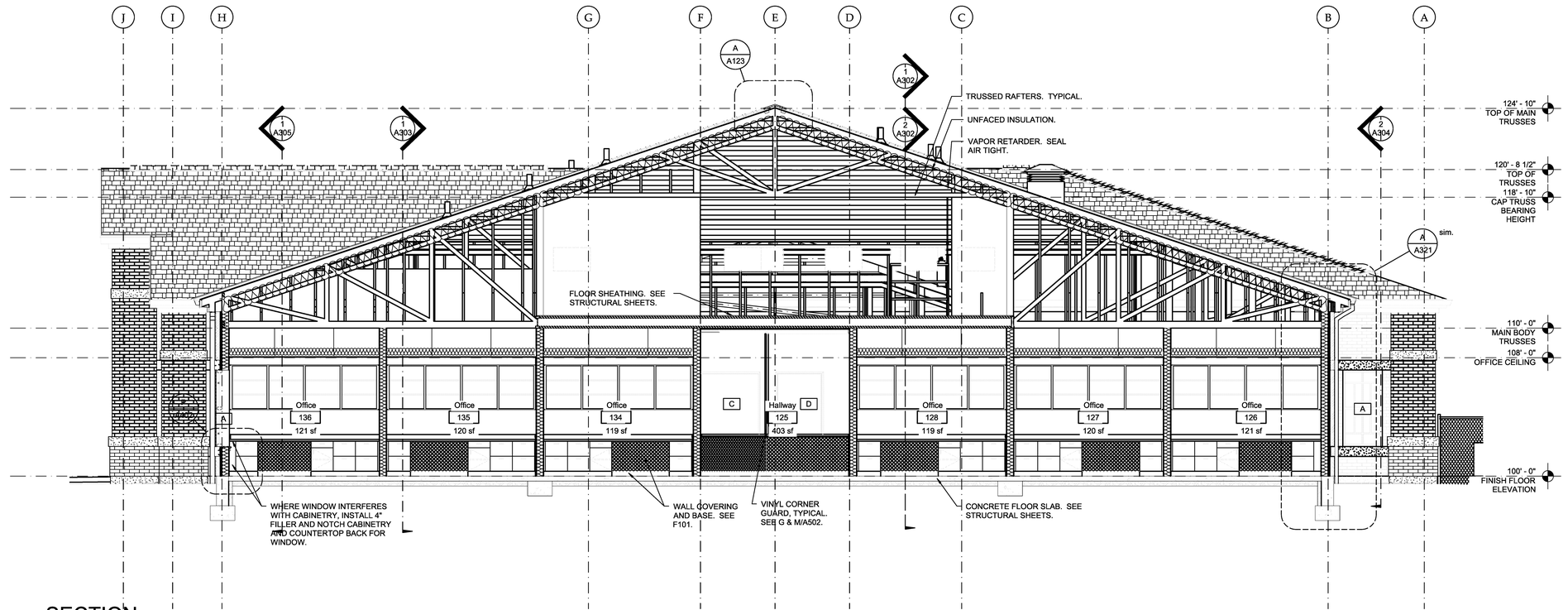

2 SECTION

SCALE: 1/4" = 1'-0"

evans + associates architecture
11576 south state street, suite 103b, draper, utah 84020
phone 801-553-8272
fax 801-553-8273

Stamp

LICENSED ARCHITECT
PAUL ANTHONY EVANS
273770
STATE OF UTAH

A New 8-Room Seminary for:

Herriman UT Mtn View Seminary
US Utah Salt Lake Valley South S&I Area

14002 Autumn Crest Blvd
Herriman, Utah

Project for:
THE CHURCH OF JESUS CHRIST OF LATTER-DAY SAINTS

Revisions	Mark	Date	Description

Project Number
18-20

Plan Series
SEM18-08-1

Property Number
501341917010101

Date
June 1, 2018

Sheet Title
BUILDING SECTIONS

Sheet
A303

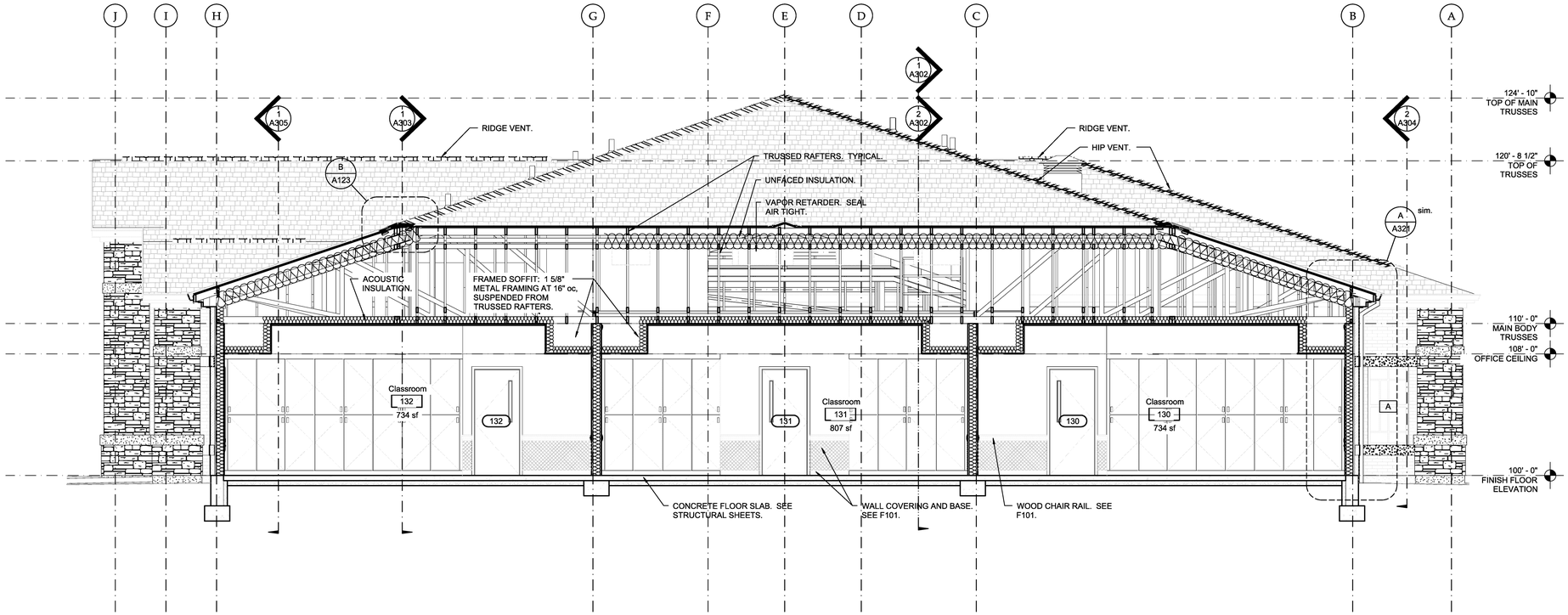

1 SECTION

SCALE: 1/4" = 1'-0"

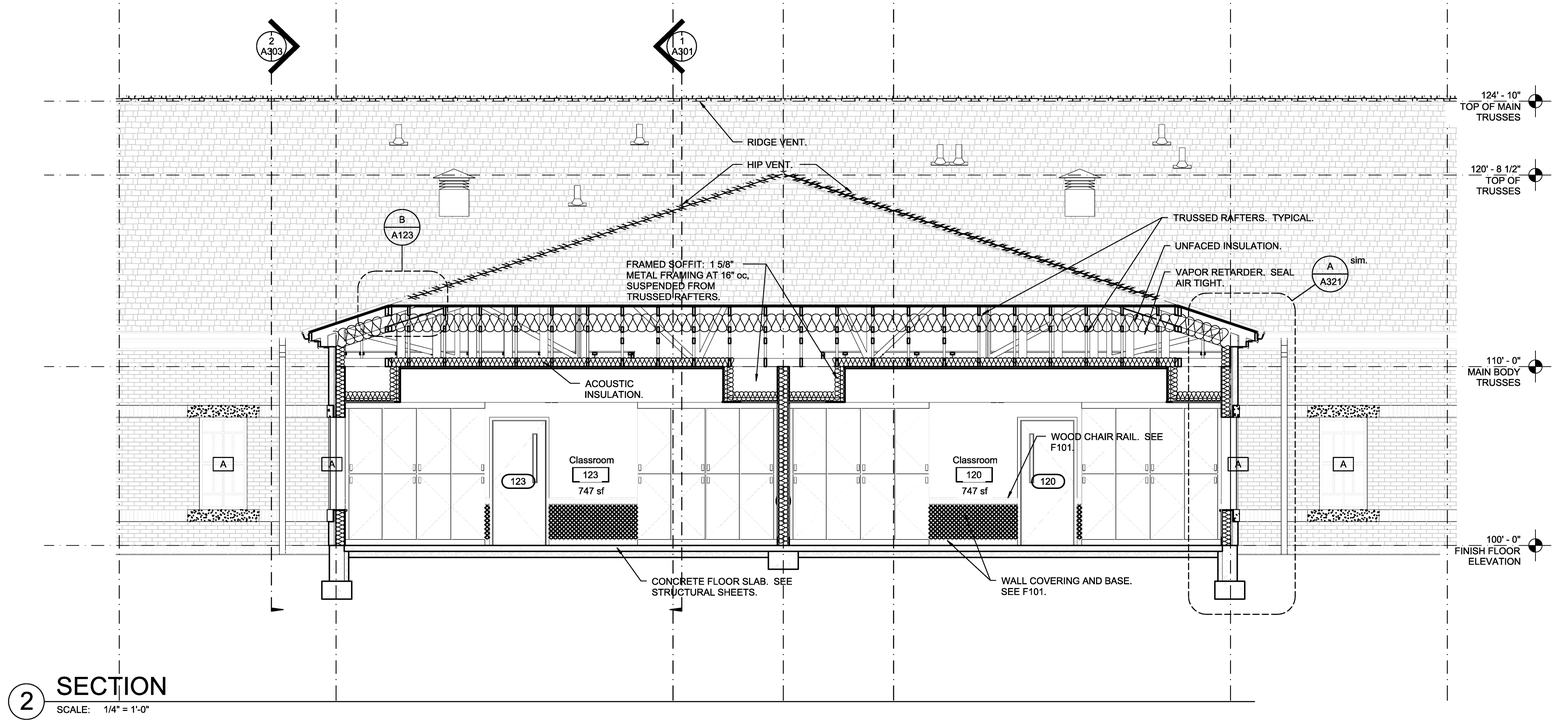

2 SECTION

SCALE: 1/4" = 1'-0"

evans + associates architecture
11576 south state street, suite 103b, draper, utah 84020
phone 801-553-8272
fax 801-553-8273

Stamp

LICENSED ARCHITECT
PAUL ANTHONY EVANS
273770
STATE OF UTAH

A New 8-Room Seminary for:

Herriman UT Mtn View Seminary
US Utah Salt Lake Valley South S&I Area

14002 Autumn Crest Blvd
Herriman, Utah

Project for:

THE CHURCH OF JESUS CHRIST OF LATTER-DAY SAINTS

Revisions			
Mark	Date	Description	

Project Number
18-20

Plan Series
SEM18-08-1

Property Number
501341917010101

Date
June 1, 2018

Sheet Title

BUILDING SECTIONS

Sheet

A304

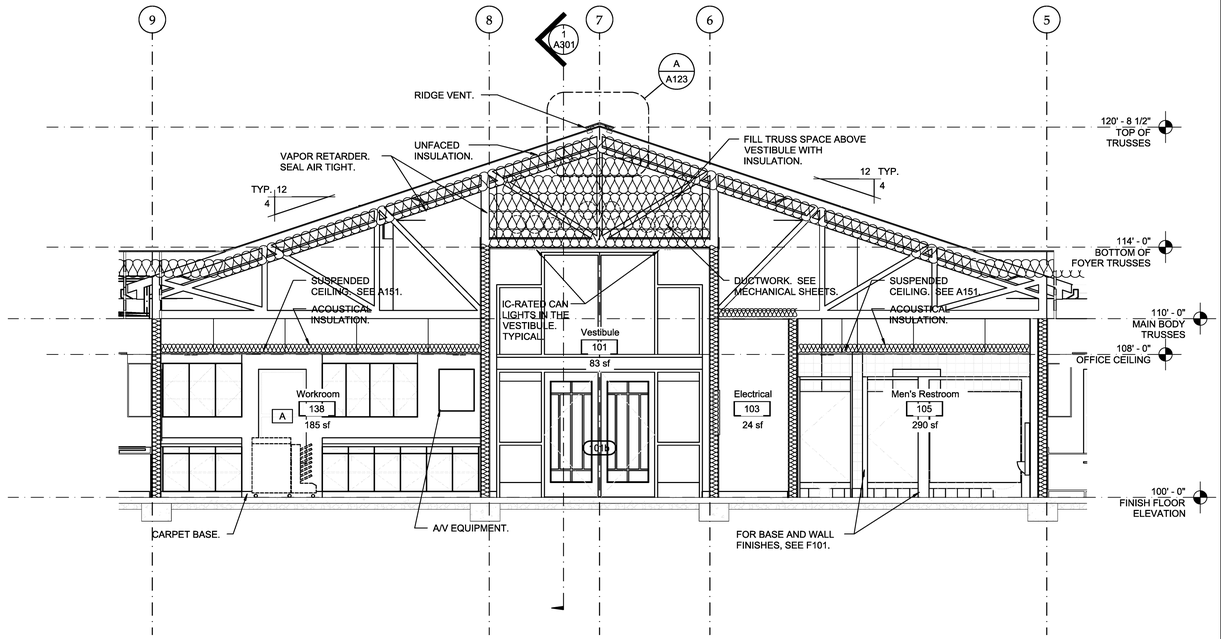

1 SECTION

SCALE: 1/4" = 1'-0"

evans + associates architecture
11576 south state street, suite 103s, draper, utah 84020
phone 801-553-8272
fax 801-553-8273

Stamp

LICENSED ARCHITECT
PAUL ANTHONY EVANS
273770
STATE OF UTAH

A New 8-Room Seminary for:

Herriman UT Mtn View Seminary
US Utah Salt Lake Valley South S&I Area

14002 Autumn Crest Blvd
Herriman, Utah

Project for:

THE CHURCH OF JESUS CHRIST OF LATTER-DAY SAINTS

Revisions		
Mark	Date	Description

Project Number
18-20

Plan Series
SEM18-08-1

Property Number
501341917010101

Date
June 1, 2018

Sheet Title

BUILDING SECTIONS

Sheet

A305

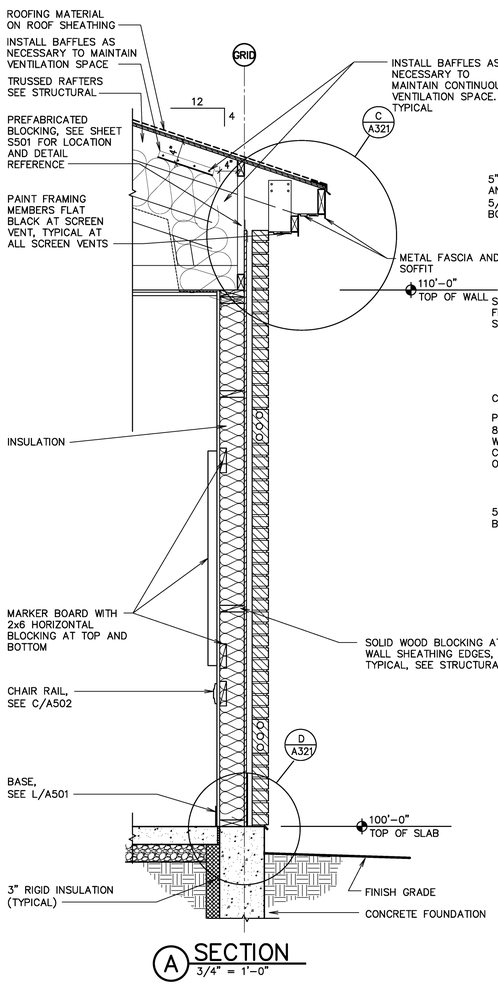

A SECTION
3/4" = 1'-0"

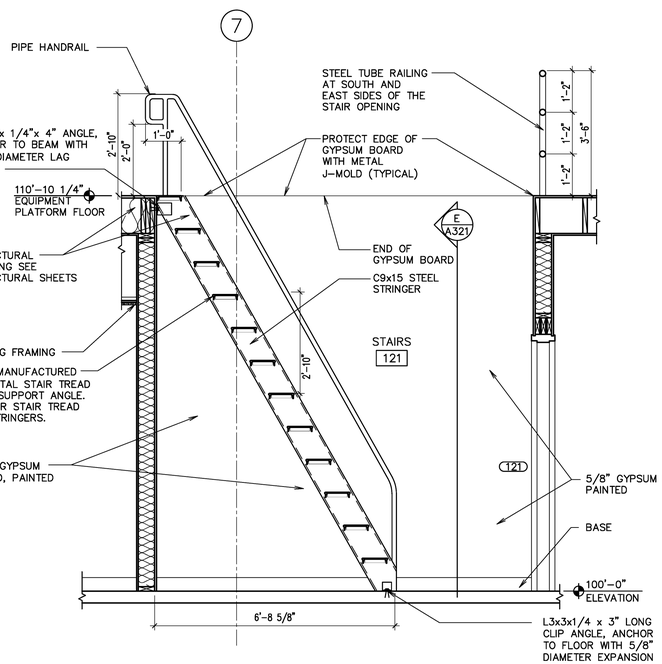

B SHIPS LADDER SECTION
1/2" = 1'-0"

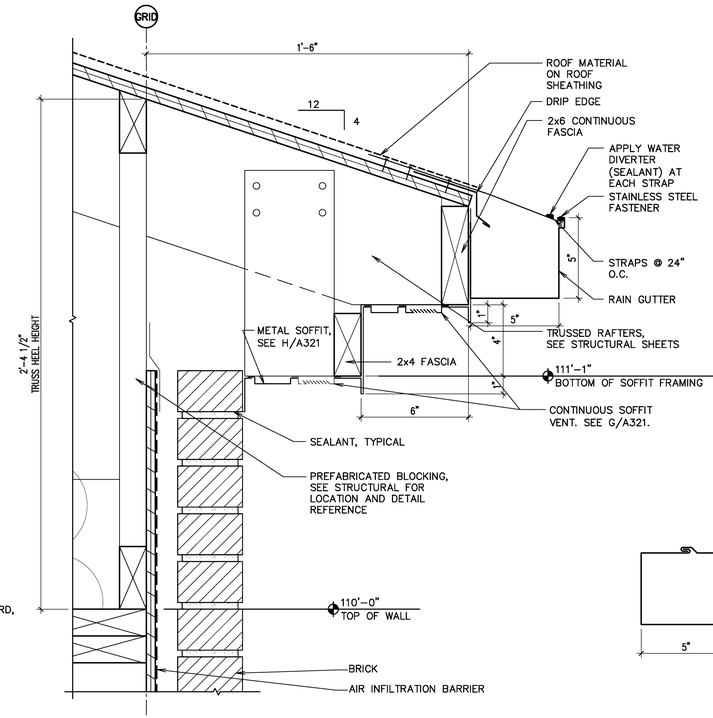

C FASCIA DETAIL
3" = 1'-0"

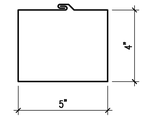

E TYPICAL DOWNSPOUT DETAIL
3" = 1'-0"

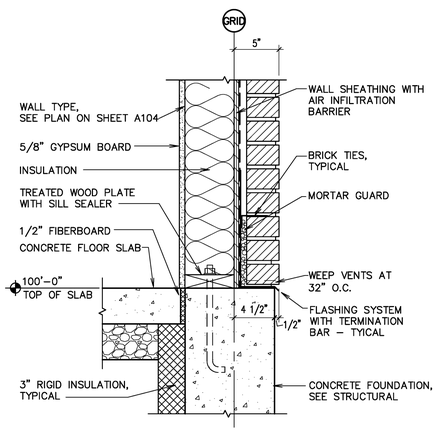

D SECTION
1 1/2" = 1'-0"

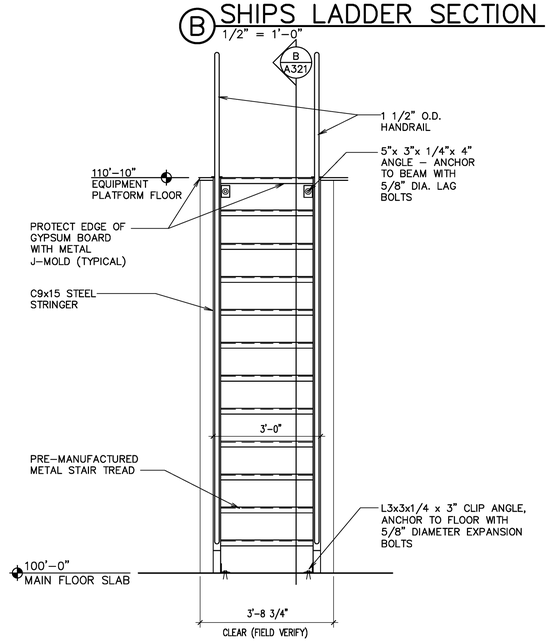

E ELEVATION
1/2" = 1'-0"

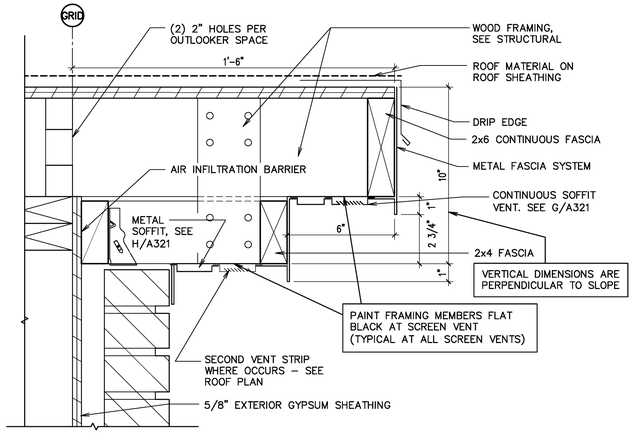

F SOFFIT VENT DETAIL
3" = 1'-0"

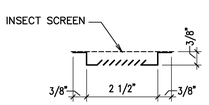

TYPICAL SOFFIT VENT PROFILE
G 6" = 1'-0"

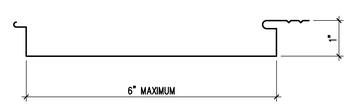

TYPICAL METAL SOFFIT PROFILE
H 6" = 1'-0"

evans + associates architecture
11576 south state street, suite 103b, draper, utah 84020
phone 801-553-8272
fax 801-553-8273

Stamp

LICENSED ARCHITECT
PAUL ANTHONY EVANS
273770
STATE OF UTAH

A New 8-Room Seminary for:
Herriman UT Mtn View Seminary
US Utah Salt Lake Valley South S&I Area
14002 Autumn Crest Blvd
Herriman, Utah

Project for:
THE CHURCH OF JESUS CHRIST OF LATTER-DAY SAINTS

Revisions	Mark	Date	Description

Project Number	18-20
Plan Series	SEM18-08-1
Property Number	50134917010101
Date	June 1, 2018

Sheet Title
SECTIONS AND DETAILS

Sheet
A321

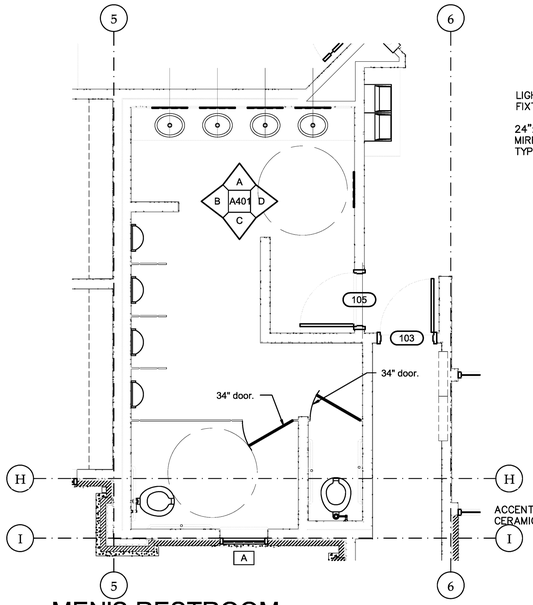

1 MEN'S RESTROOM
SCALE: 1/4" = 1'-0"

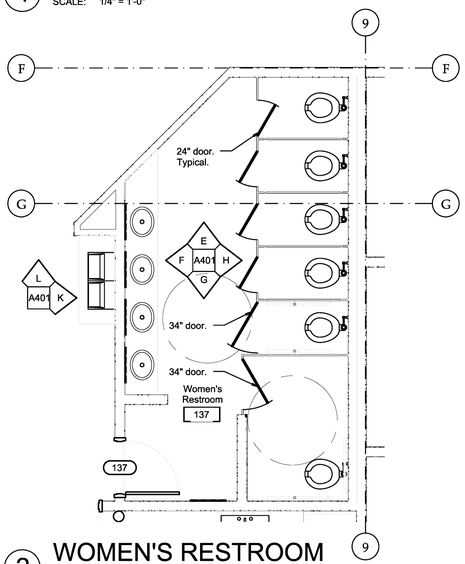

2 WOMEN'S RESTROOM
SCALE: 1/4" = 1'-0"

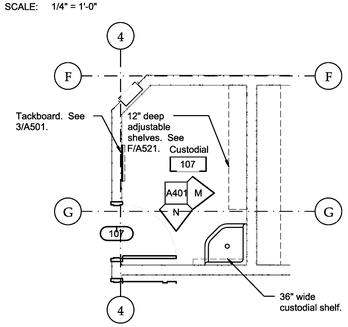

3 CUSTODIAL
SCALE: 1/4" = 1'-0"

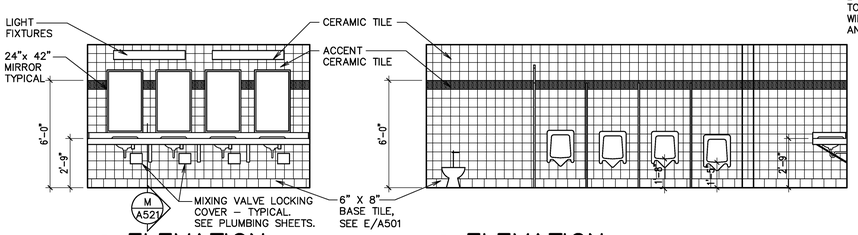

A ELEVATION
1/4" = 1'-0"

B ELEVATION
1/4" = 1'-0"

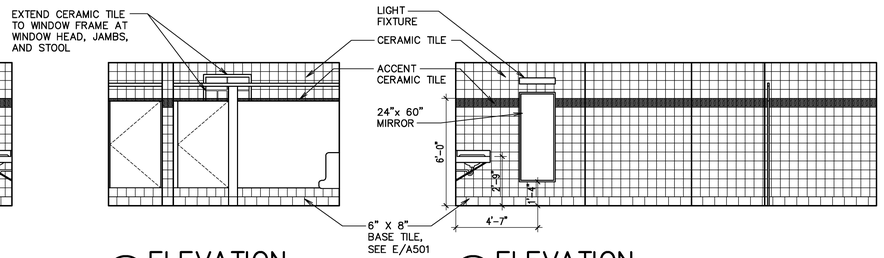

C ELEVATION
1/4" = 1'-0"

D ELEVATION
1/4" = 1'-0"

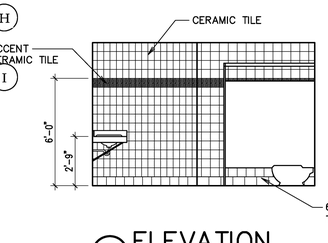

E ELEVATION
1/4" = 1'-0"

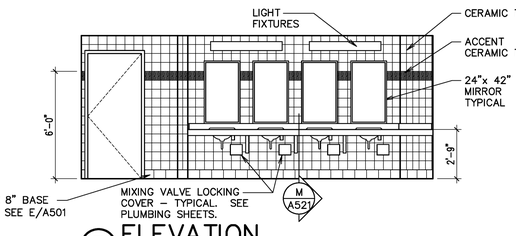

F ELEVATION
1/4" = 1'-0"

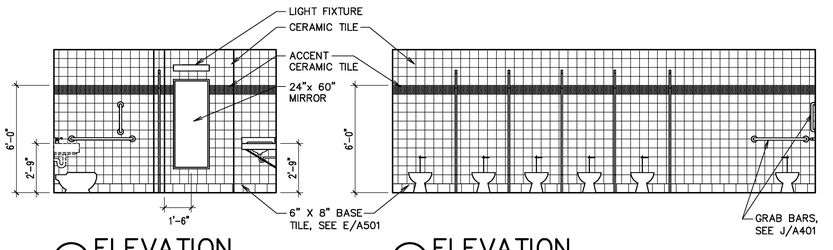

G ELEVATION
1/4" = 1'-0"

H ELEVATION
1/4" = 1'-0"

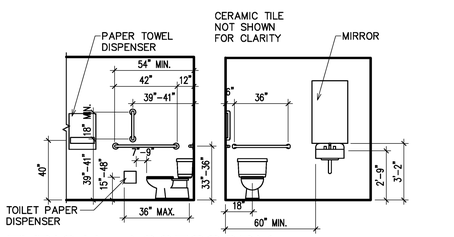

TYPICAL ACCESSORY MOUNTING LOCATION
1/4" = 1'-0"

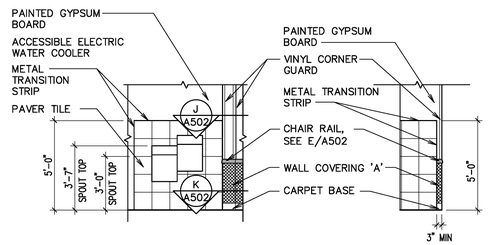

K ELEVATION
1/4" = 1'-0"

L ELEVATION
1/4" = 1'-0"

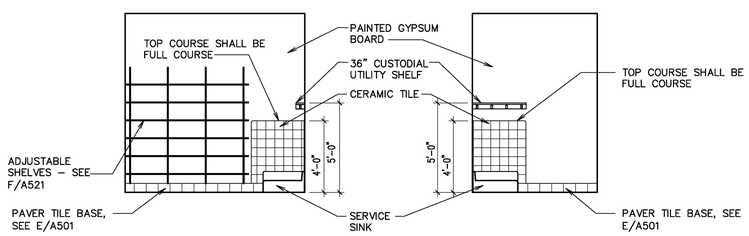

M ELEVATION
1/4" = 1'-0"

N ELEVATION
1/4" = 1'-0"

evans + associates architecture
11576 south state street, suite 103b, draper, utah 84020
phone 801-333-8272 fax 801-333-8273

Stamp

LICENSED ARCHITECT
PAUL ANTHONY EVANS
273770
STATE OF UTAH

A New 8-Room Seminary for:
Herriman UT Mtn View Seminary
US Utah Salt Lake Valley South S&I Area
14002 Autumn Crest Blvd
Herriman, Utah

Project for:
THE CHURCH OF JESUS CHRIST OF LATTER-DAY SAINTS

Revisions	Mark	Date	Description

Project Number 18-20
Plan Series SEM18-08-1
Property Number 501341917010101
Date June 1, 2018

Sheet Title
ENLARGED PLANS

Sheet
A401

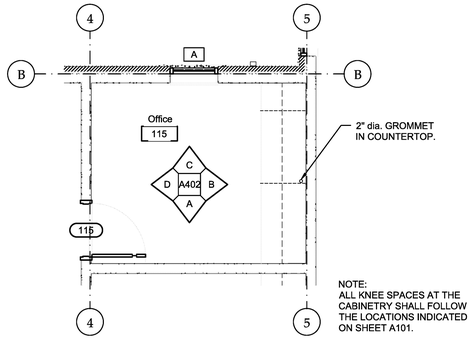

1 TYPICAL OFFICE

SCALE: 1/4" = 1'-0"

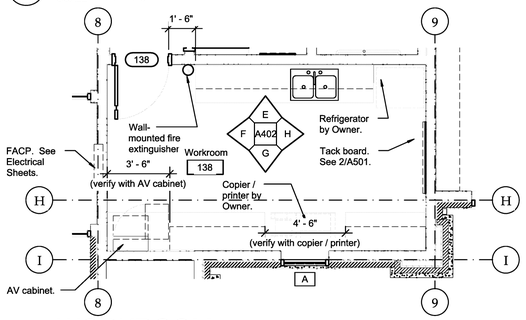

2 WORKROOM

SCALE: 1/4" = 1'-0"

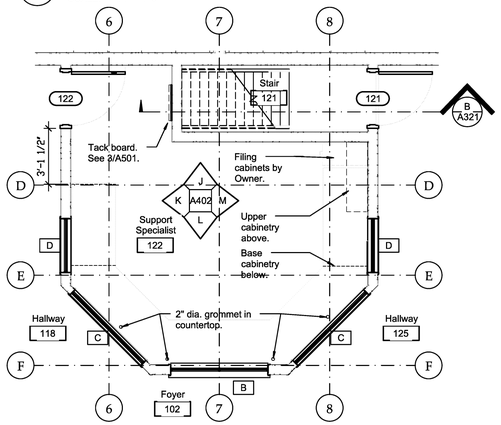

3 SUPPORT SPECIALIST

SCALE: 1/4" = 1'-0"

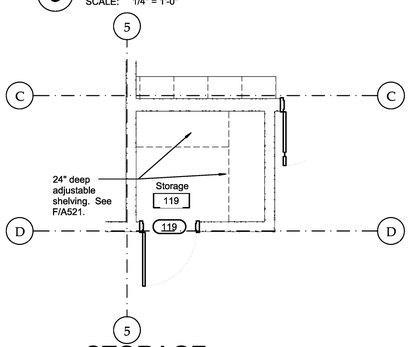

4 STORAGE

SCALE: 1/4" = 1'-0"

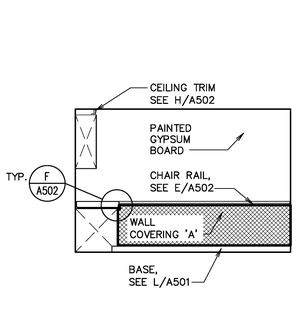

A ELEVATION

1/4" = 1'-0"

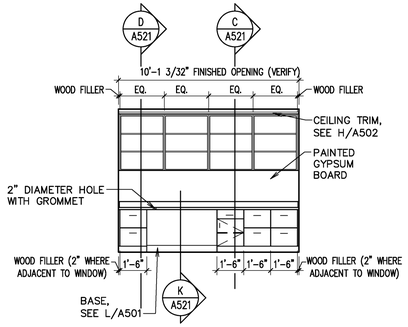

B ELEVATION

1/4" = 1'-0"

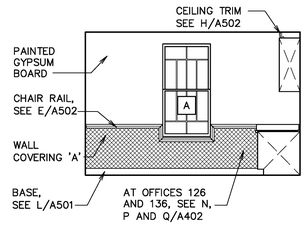

C ELEVATION

1/4" = 1'-0"

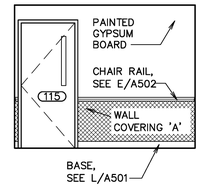

D ELEVATION

1/4" = 1'-0"

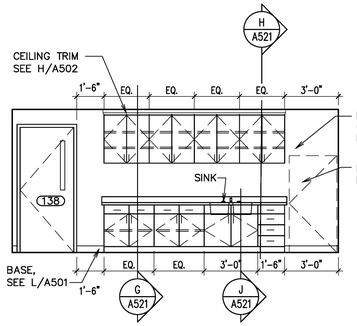

E ELEVATION

1/4" = 1'-0"

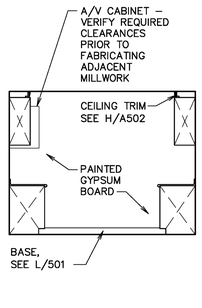

F ELEVATION

1/4" = 1'-0"

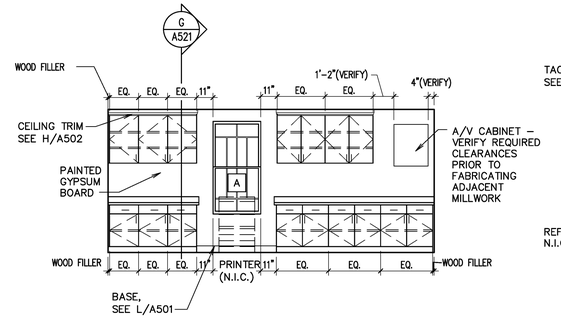

G ELEVATION

1/4" = 1'-0"

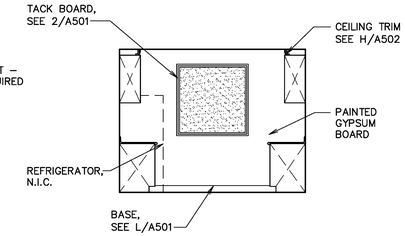

H ELEVATION

1/4" = 1'-0"

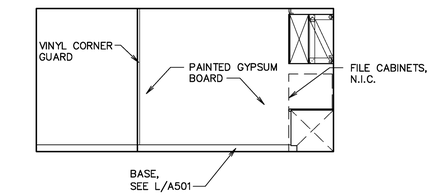

J ELEVATION

1/4" = 1'-0"

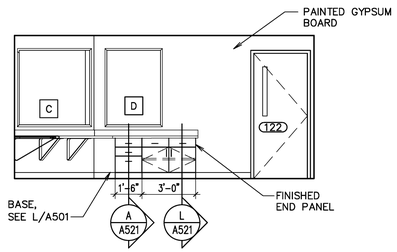

K ELEVATION

1/4" = 1'-0"

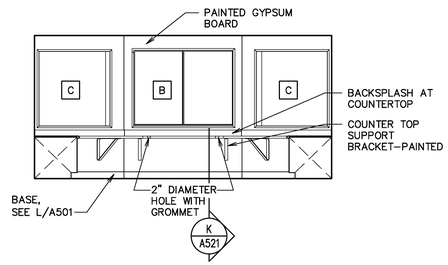

L ELEVATION

1/4" = 1'-0"

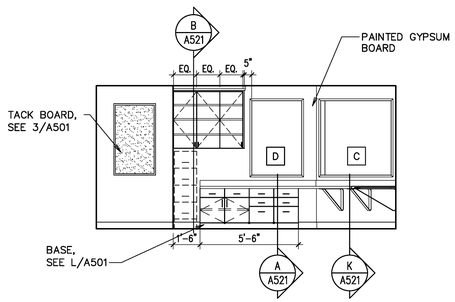

M ELEVATION

1/4" = 1'-0"

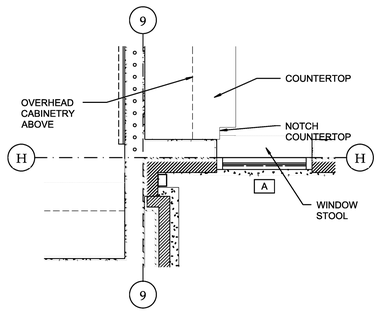

N COUNTERTOP DETAIL

SCA 1/2" = 1'-0"

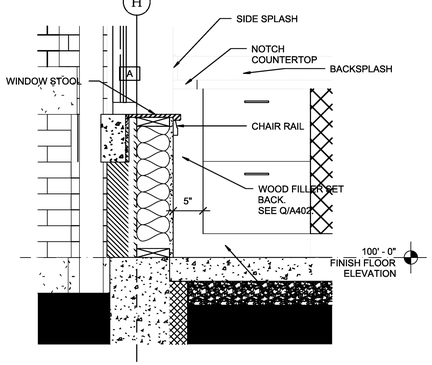

P CABINET SECTION

SCALE: 1" = 1'-0"

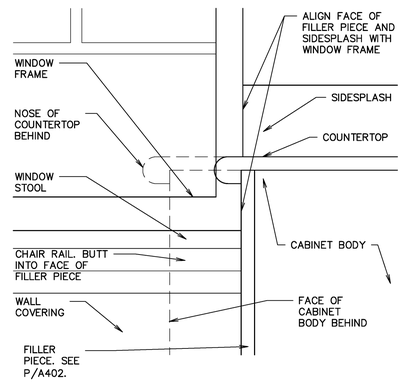

Q DETAIL

3" = 1'-0"

evans + associates architecture
11576 south state street, suite 103b, draper, utah 84020
phone 801-333-8273 fax 801-333-8273

Stamp

LICENSED ARCHITECT
PAUL ANTHONY EVANS
273770
STATE OF UTAH

A New 8-Room Seminary for:

Herriman UT Mtn View Seminary
US Utah Salt Lake Valley South S&I Area

14002 Autumn Crest Blvd
Herriman, Utah

Project for:
THE CHURCH OF JESUS CHRIST OF LATTER-DAY SAINTS

Revisions		
Mark	Date	Description

Project Number 18-20
Plan Series SEM18-08-1
Property Number 501341917010101
Date June 1, 2018

Sheet Title
ENLARGED PLANS

Sheet
A402

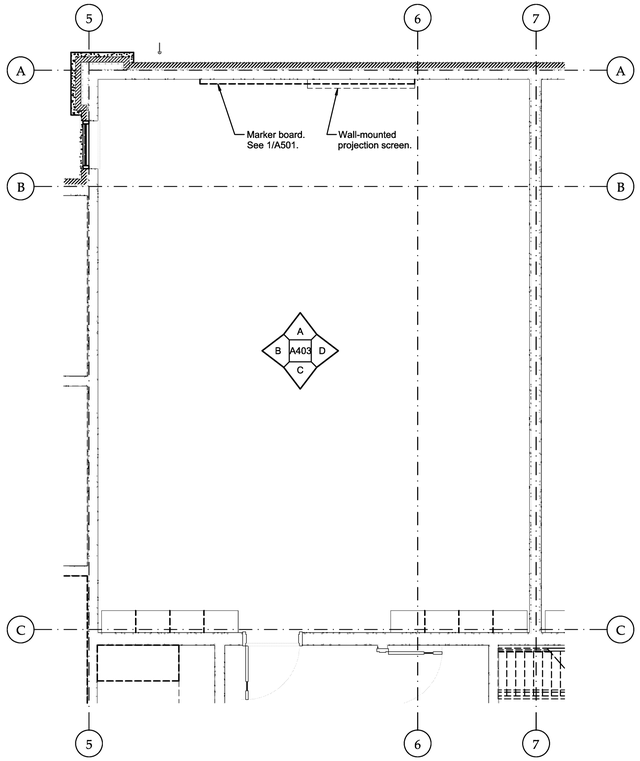

1 TYPICAL CLASSROOM
SCALE: 1/4" = 1'-0"

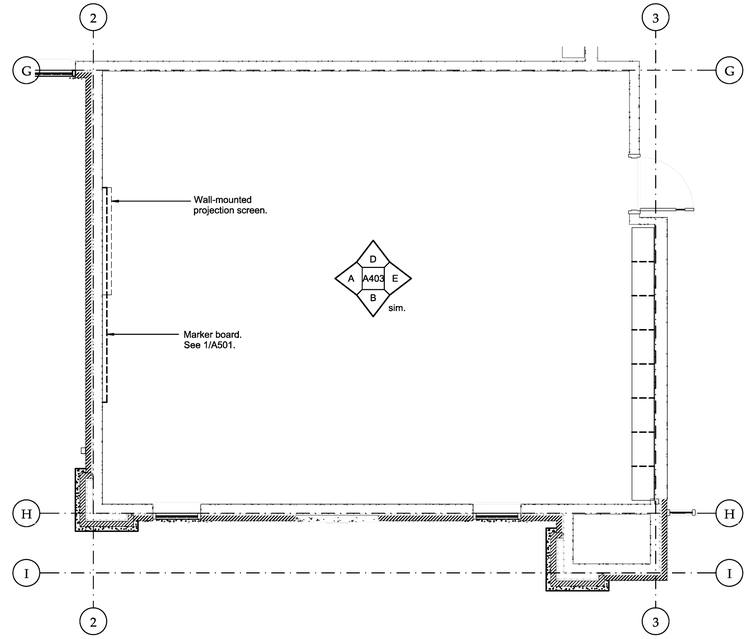

2 TYPICAL CLASSROOM
SCALE: 1/4" = 1'-0"

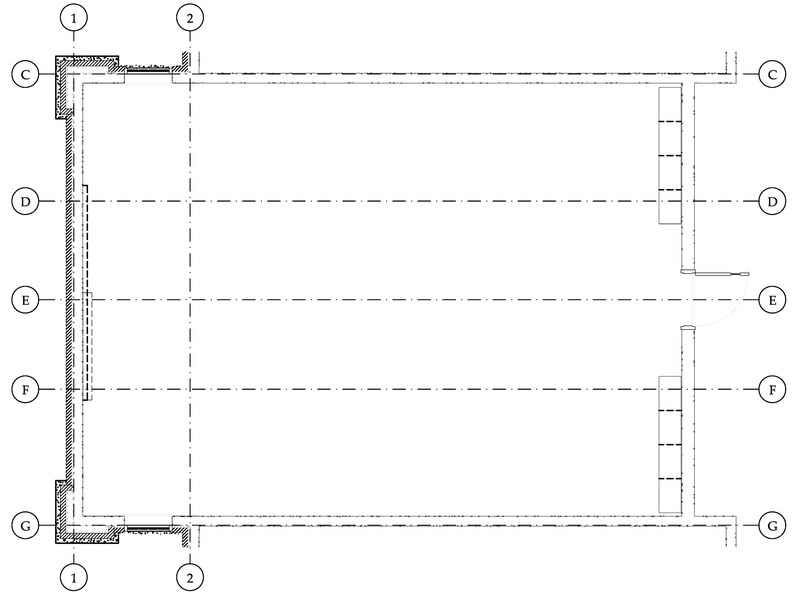

3 TYPICAL CLASSROOM
SCALE: 1/4" = 1'-0"

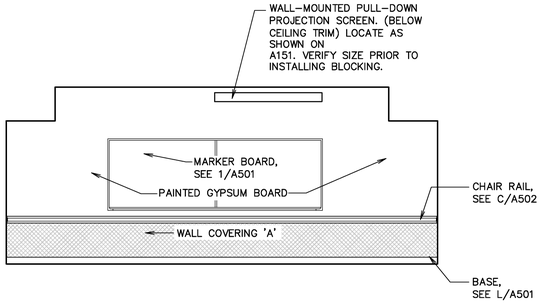

A ELEVATION
1/4" = 1'-0"

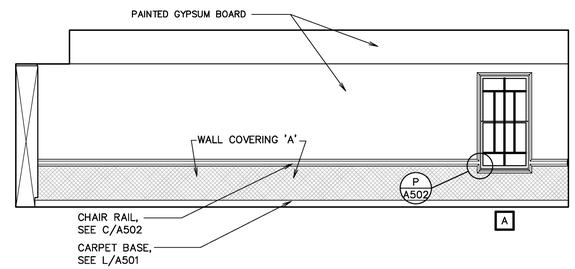

B ELEVATION
1/4" = 1'-0"

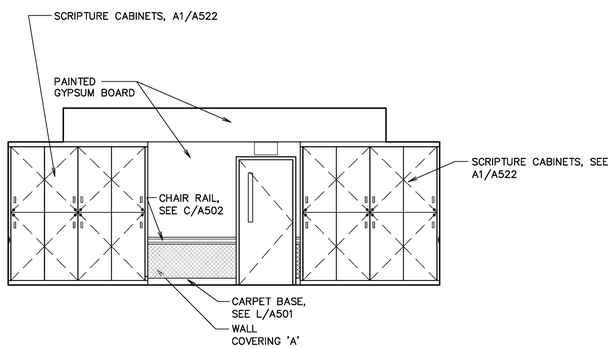

C ELEVATION
1/4" = 1'-0"

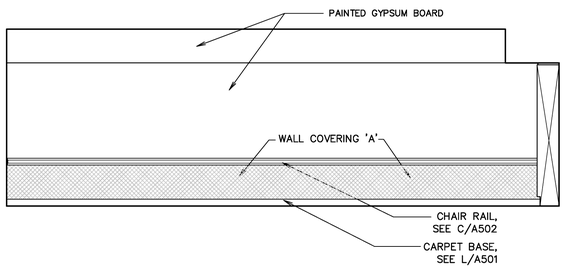

D ELEVATION
1/4" = 1'-0"

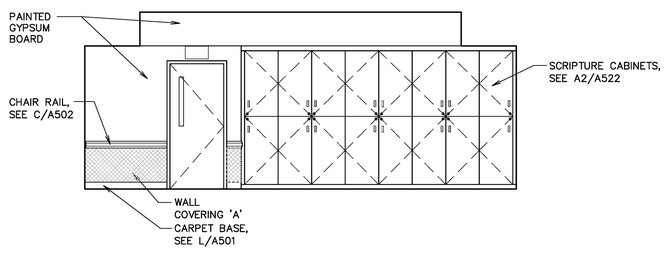

E ELEVATION
1/4" = 1'-0"

evans + associates architecture
11576 south state street, suite 103b, draper, utah 84020
phone 801-333-8273
fax 801-333-8273

Stamp

LICENSED ARCHITECT
PAUL ANTHONY EVANS
273770
STATE OF UTAH

A New 8-Room Seminary for:
Herriman UT Mtn View Seminary
US Utah Salt Lake Valley South S&I Area
14002 Autumn Crest Blvd
Herriman, Utah

Project for:
THE CHURCH OF JESUS CHRIST OF LATTER-DAY SAINTS

Revisions

Mark	Date	Description

Project Number
18-20
Plan Series
SEM18-08-1
Property Number
501341917010101
Date
June 1, 2018

Sheet Title
ENLARGED CLASSROOMS

Sheet
A403

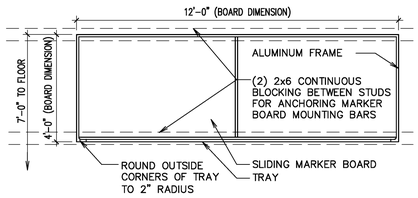

1 MARKER BOARD
3/8" = 1'-0"

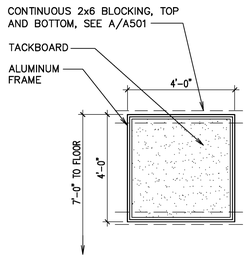

2 TACK BOARD
3/8" = 1'-0"

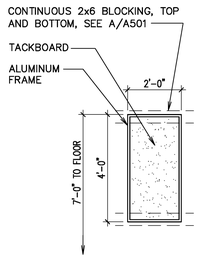

3 TACK BOARD
3/8" = 1'-0"

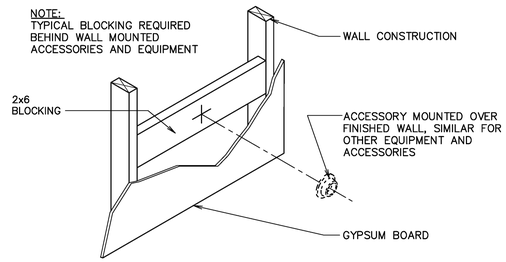

TYPICAL ACCESSORY MOUNTING DETAIL
A SCALE: NONE

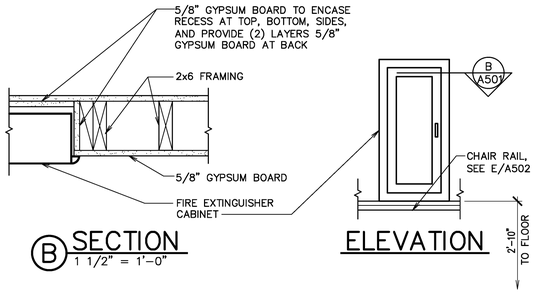

FIRE EXTINGUISHER CABINET DETAILS
C 1 1/2" = 1'-0"

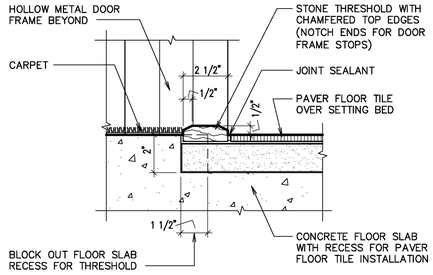

D STONE THRESHOLD DETAIL
3" = 1'-0"

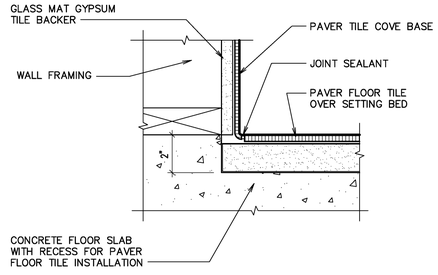

E PAVER TILE COVE BASE DETAIL
3" = 1'-0"

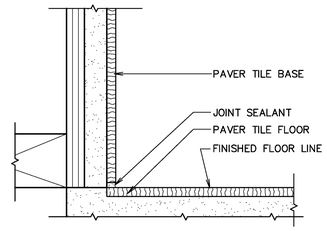

F PAVER TILE BASE
6" = 1'-0"

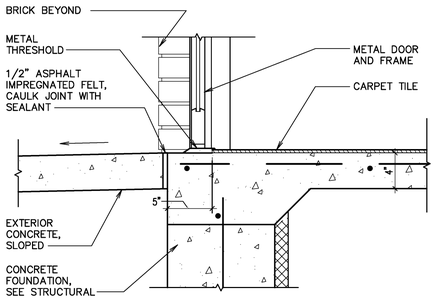

G THRESHOLD
1 1/2" = 1'-0"

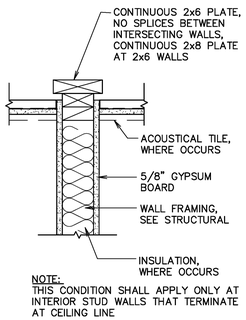

J DETAIL
1 1/2" = 1'-0"

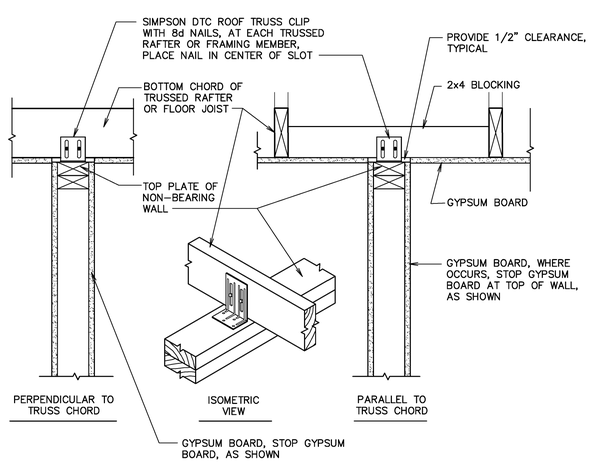

K TYPICAL DETAIL
1 1/2" = 1'-0"

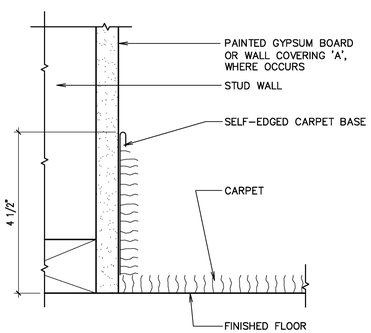

L CARPET BASE
6" = 1'-0"

evans + associates architecture
1 1576 south state street, suite 103b, draper, utah 84020
phone 801-353-8272 fax 801-353-8273

Stamp

LICENSED ARCHITECT
PAUL ANTHONY EVANS
273770
STATE OF UTAH

A New 8-Room Seminary for:
Herriman UT Mtn View Seminary
US Utah Salt Lake Valley South S&I Area
14002 Autumn Crest Blvd
Herriman, Utah

Project for:
THE CHURCH OF JESUS CHRIST OF LATTER-DAY SAINTS

Revisions		
Mark	Date	Description

Project Number 18-20
Plan Series SEM18-08-1
Property Number 501341917010101
Date June 1, 2018

Sheet Title
MISCELLANEOUS DETAILS

Sheet
A501

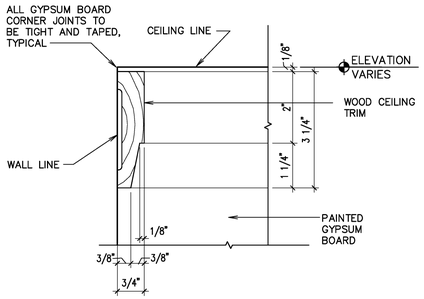

A CEILING MOLDING
6" = 1'-0"

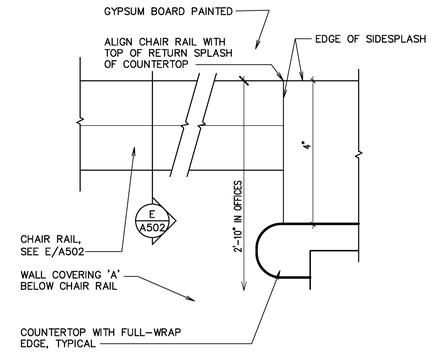

F CHAIR RAIL TRANSITION (IN OFFICES ONLY)
6" = 1'-0"

SEE Q/A402 AT OFFICES 109 AND 136

GENERAL NOTE: (TYPICAL) WOOD TRIM CORNERS AND EDGES ARE NOT TO BE EASED OR ROUNDED.

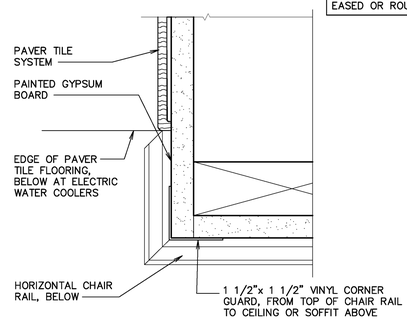

J TRANSITION AT ELECTRIC WATER COOLER
6" = 1'-0"

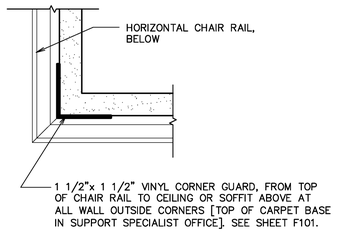

G VINYL CORNER GUARD AT WALL CORNERS
6" = 1'-0"

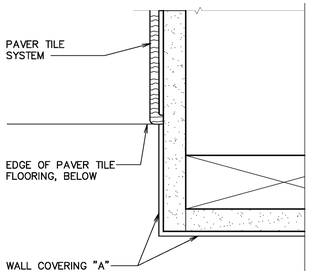

K TRANSITION AT ELECTRIC WATER COOLER
6" = 1'-0"

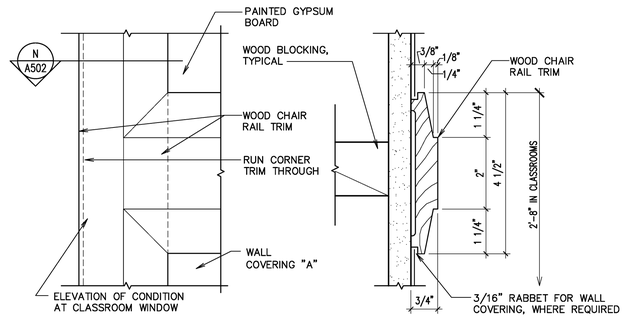

C CHAIR RAIL AND WOOD TRIM
6" = 1'-0"

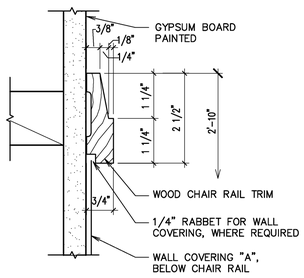

E CHAIR RAIL
6" = 1'-0"

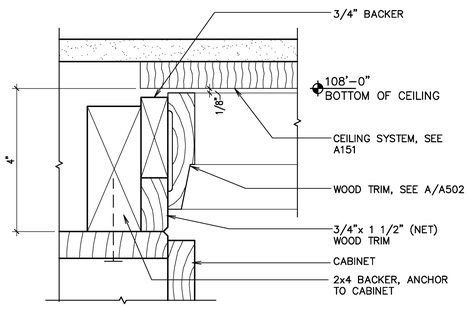

H CABINET MOLDING
6" = 1'-0"

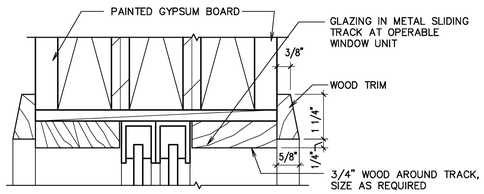

L PASS-THROUGH WINDOW WOOD TRIM
6' = 1'-0"

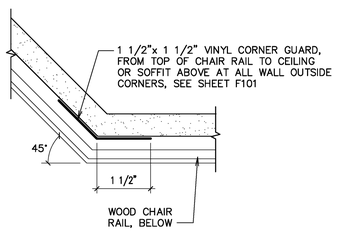

M VINYL CORNER GUARD AT WALL CORNERS
6" = 1'-0"

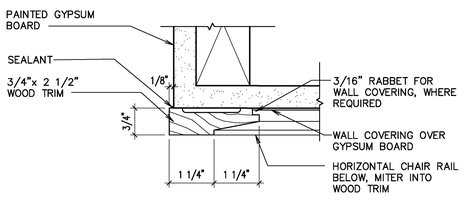

N CLASSROOM WINDOW MOLDING DETAIL
6" = 1'-0"

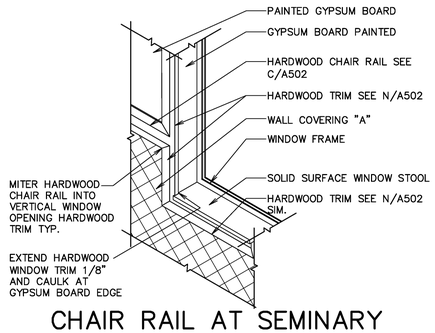

P CHAIR RAIL AT SEMINARY CLASSROOM WINDOW DETAIL
3/4" = 1'-0"

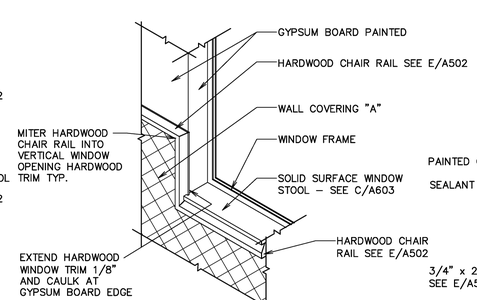

Q CHAIR RAIL AT SEMINARY OFFICE WINDOW DETAIL
3/4" = 1'-0"

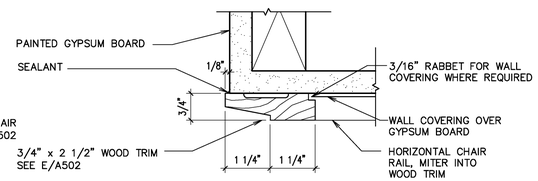

R OFFICE WINDOW MOLDING DETAIL
6" = 1'-0"

evans + associates architecture
11576 south state street, suite 103b, draper, utah 84020
phone 801-553-8272
fax 801-553-8273

Stamp

LICENSED ARCHITECT
PAUL ANTHONY EVANS
273770
STATE OF UTAH

A New 8-Room Seminary for:

Herriman UT Mtn View Seminary
US Utah Salt Lake Valley South S&I Area

14002 Autumn Crest Blvd
Herriman, Utah

Project for:
THE CHURCH OF JESUS CHRIST OF LATTER-DAY SAINTS

Revisions		
Mark	Date	Description

Project Number
18-20

Plan Series
SEM18-08-1

Property Number
501341917010101

Date
June 1, 2018

Sheet Title
MISCELLANEOUS DETAILS

Sheet
A502

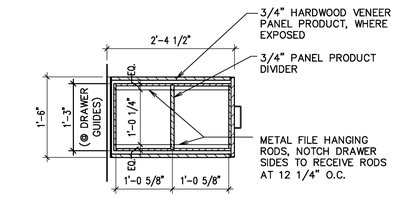

AA SECTION
3/4" = 1'-0"

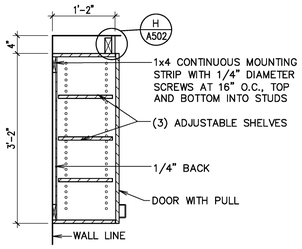

B SECTION
3/4" = 1'-0"

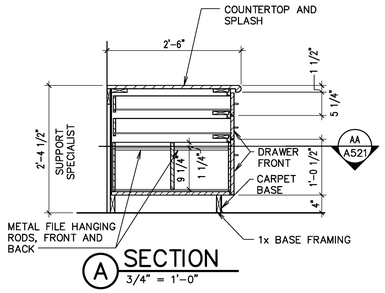

A SECTION
3/4" = 1'-0"

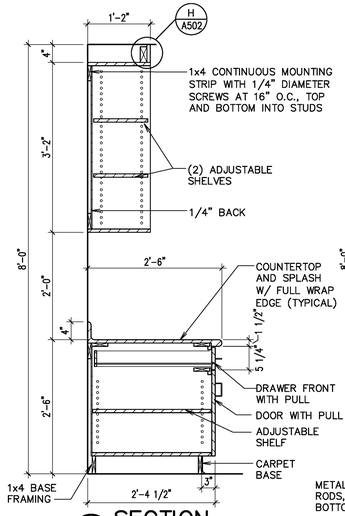

C SECTION
3/4" = 1'-0"

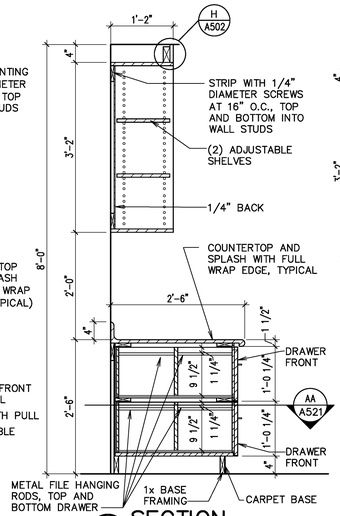

D SECTION
3/4" = 1'-0"

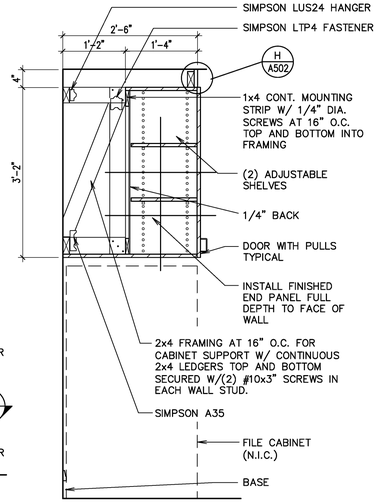

E SECTION
3/4" = 1'-0"

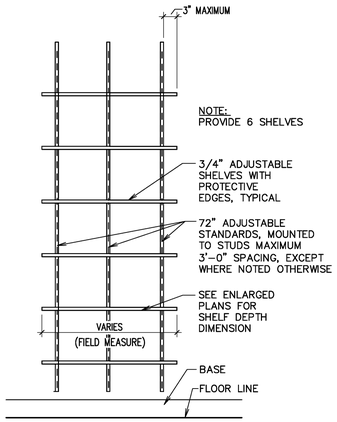

F ELEVATION
3/4" = 1'-0"

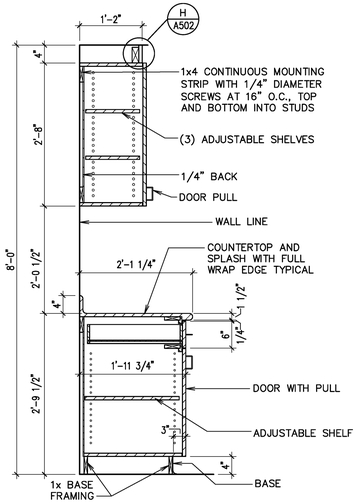

G SECTION
3/4" = 1'-0"

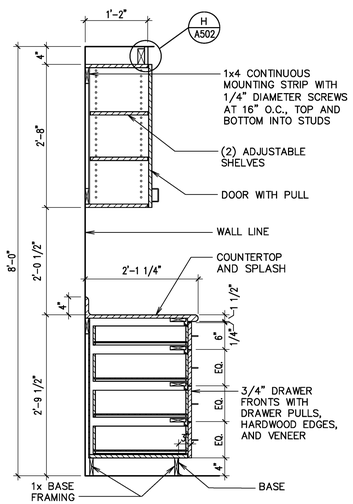

H SECTION
3/4" = 1'-0"

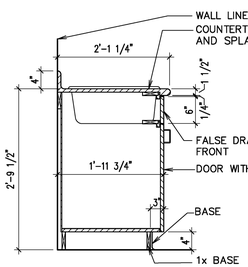

J SECTION
3/4" = 1'-0"

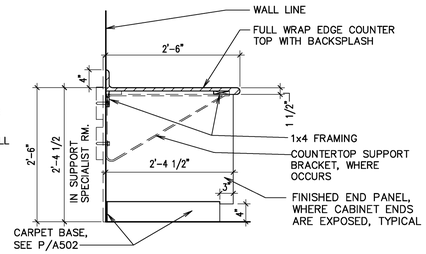

K SECTION
3/4" = 1'-0"

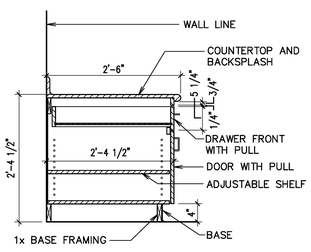

L SECTION
3/4" = 1'-0"

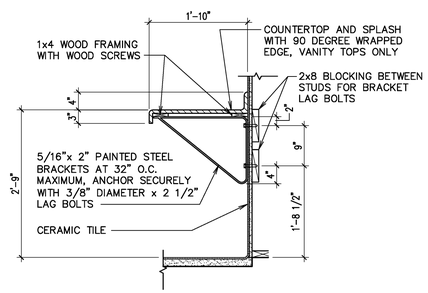

M VANITY COUNTER DETAIL
3/4" = 1'-0"

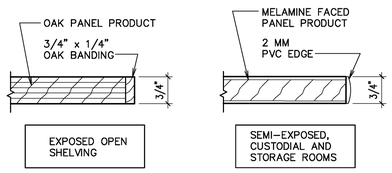

1 TYPICAL SHELVING EDGE TYPES
6" = 1'-0"

evans + associates architecture
11576 south state street, suite 103b, draper, utah 84020
phone 801-333-8272
fax 801-333-8273

Stamp

LICENSED ARCHITECT
PAUL ANTHONY EVANS
273770
STATE OF UTAH

A New 8-Room Seminary for:
Herriman UT Mtn View Seminary
US Utah Salt Lake Valley South S&I Area
14002 Autumn Crest Blvd
Herriman, Utah

Project for:
THE CHURCH OF JESUS CHRIST OF LATTER-DAY SAINTS

Revisions

Mark	Date	Description

Project Number
18-20
Plan Series
SEM18-08-1
Property Number
501341917010101
Date
June 1, 2018

Sheet Title
CABINETRY DETAILS

Sheet
A521

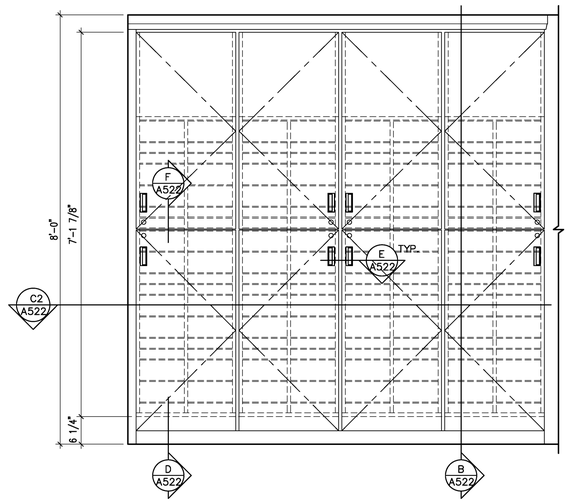

A1 ELEVATION
3/4" = 1'-0"

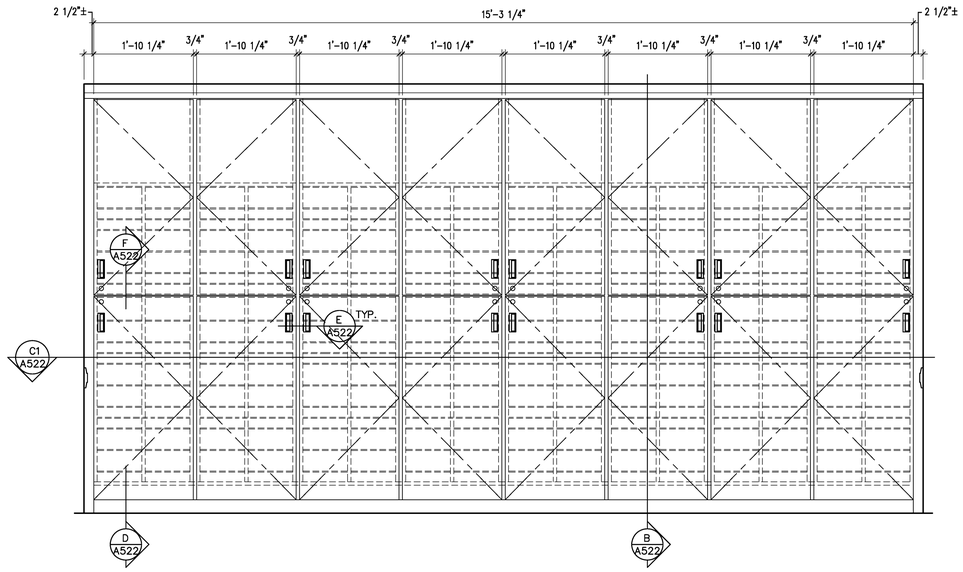

A2 ELEVATION
3/4" = 1'-0"

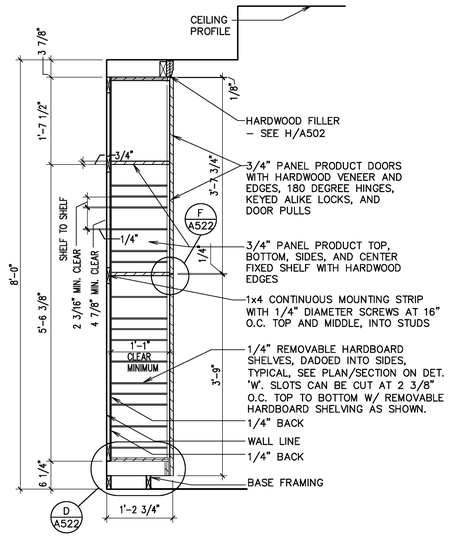

B CABINET SECTION
3/4" = 1'-0"

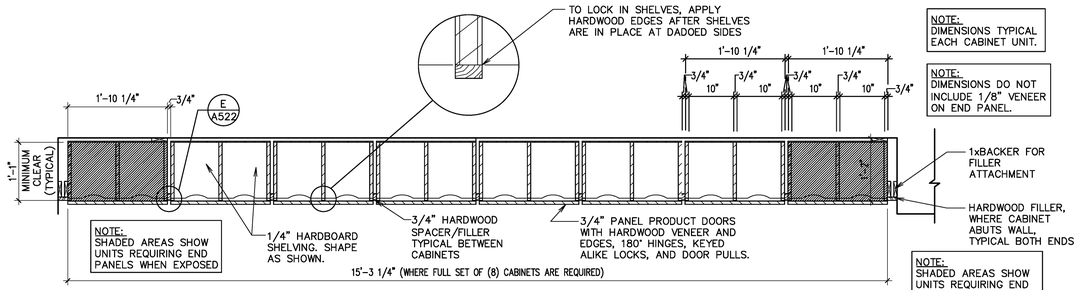

C1 SCRIPTURE CABINET SECTION
3/4" = 1'-0"

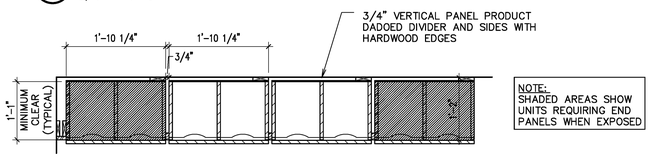

C2 SCRIPTURE CABINET SECTION
3/4" = 1'-0"

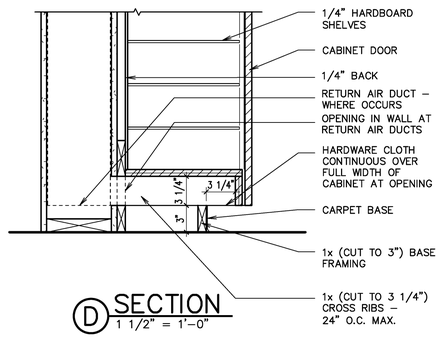

D SECTION
1 1/2" = 1'-0"

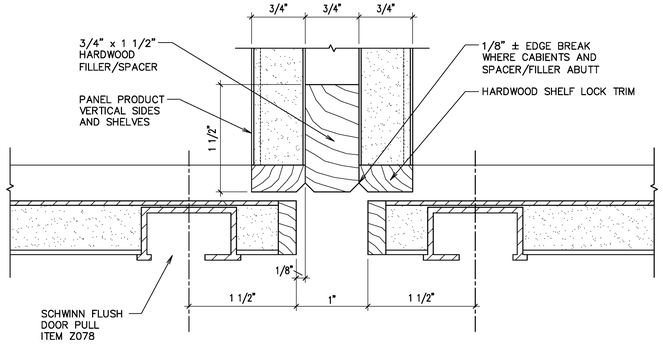

E SECTION
FULL SCALE

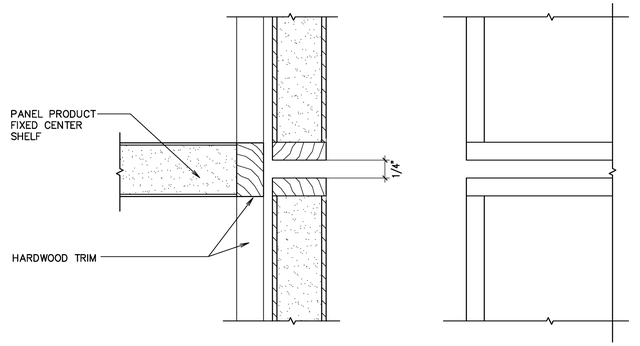

F SECTION
FULL SCALE

G ELEVATION
FULL SCALE

SCRIPTURE CABINET DOOR DETAILS

evans + associates architecture
11576 south state street, suite 103s, draper, utah 84020
phone 801-333-8272 fax 801-333-8273

Stamp

LICENSED ARCHITECT
PAUL ANTHONY EVANS
273770
STATE OF UTAH

A New 8-Room Seminary for:
Herriman UT Mtn View Seminary
US Utah Salt Lake Valley South S&I Area
14002 Autumn Crest Blvd
Herriman, Utah

Project for:
THE CHURCH OF JESUS CHRIST OF LATTER-DAY SAINTS

Revisions		
Mark	Date	Description

Project Number	18-20
Plan Series	SEM18-08-1
Property Number	501341917010101
Date	June 1, 2018

Sheet Title
SCRIPTURE CABINETRY DETAILS

Sheet
A522

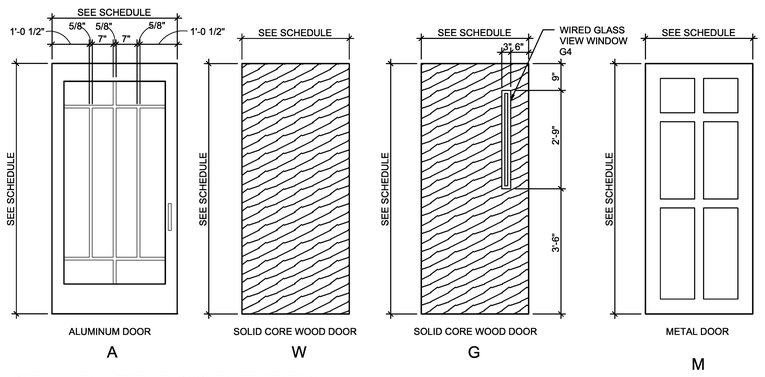

1 STANDARD DOOR TYPES

SCALE: 1/2" = 1'-0"

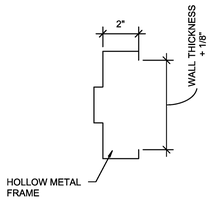

A PROFILE A

SCALE: 3" = 1'-0"

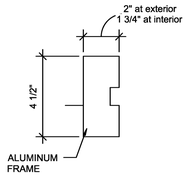

B PROFILE B

SCALE: 3" = 1'-0"

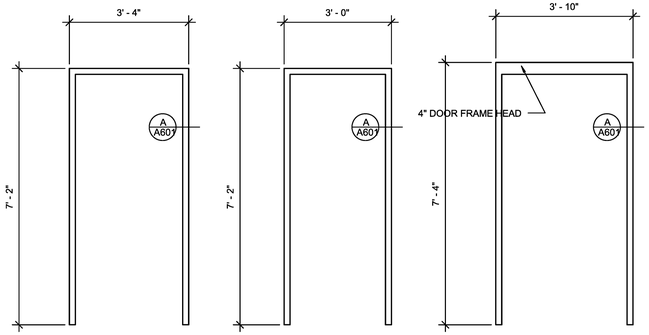

2 HOLLOW METAL FRAME TYPES

SCALE: 1/2" = 1'-0"

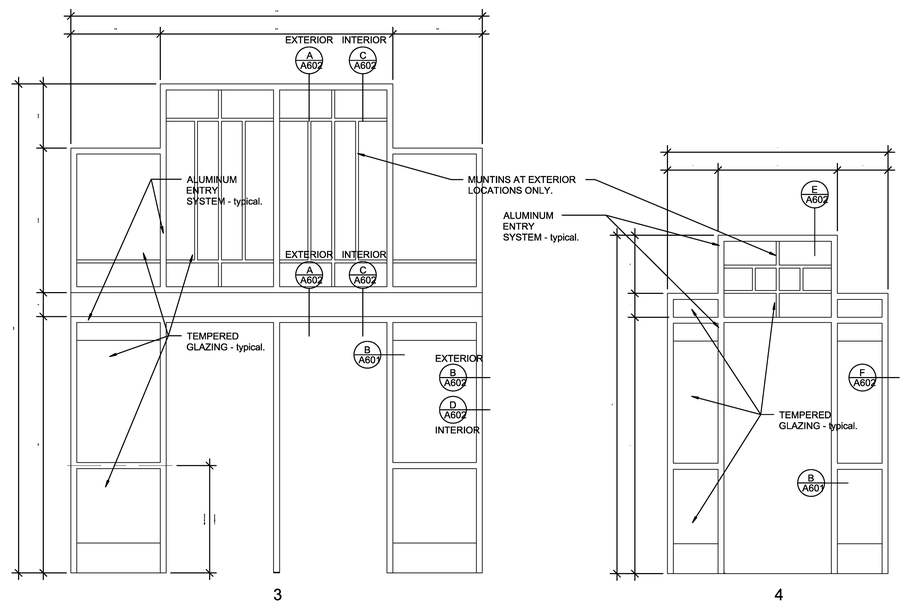

3 ALUMINUM FRAME TYPES

SCALE: 1/2" = 1'-0"

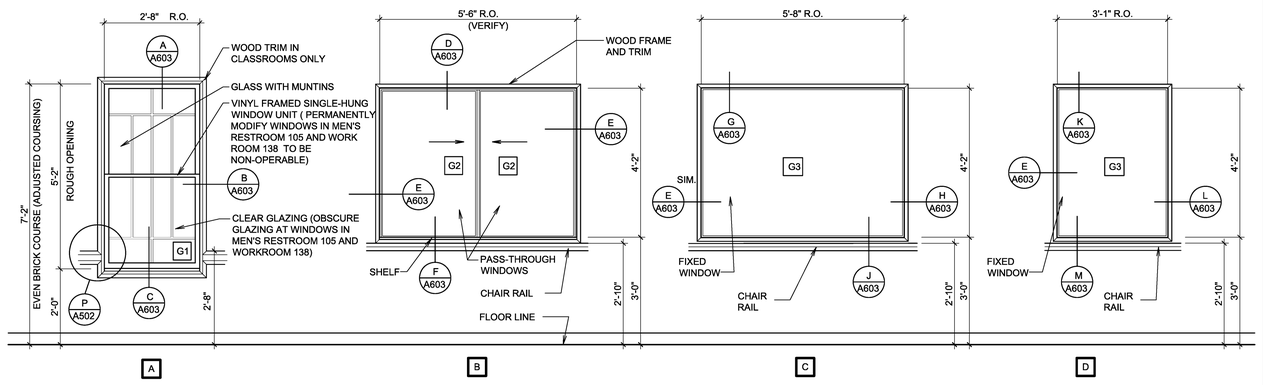

4 WINDOW TYPES

1/2" = 1'-0"

DOOR SCHEDULE

Mark	Pair	Single	Door Type	Height	Width	Thickness	Glass	Frame Type	Frame Profile	Frame Depth	Wall Thickness	Head Detail	Jamb Detail	Hardware Group	Door Stop	Keying	Fire Rating	Threshold	Remarks	Mark
Main Floor																				
101a	X		A	7' - 0"	3' - 0"	1 3/4"	G1	3	B	4 1/2"	8 3/8"	A/A602	B/A602	ST1	DS-3			T1	R1 R2 R3 SS4	101a
101b	X		A	7' - 0"	3' - 0"	1 3/4"	G2	3	B	4 1/2"	8 1/2"	C/A602	D/A602	ST1A	DS-3			T1	R1 SS3	101b
103		X	W	7' - 0"	3' - 0"	1 3/4"		1	A	7 7/8"	6 3/4"	J/A602	K/A602	22	DS-1	AA1		T3		103
105		X	W	7' - 0"	3' - 0"	1 3/4"		1	A	7 7/8"	6 3/4"	J/A602	K/A602	28	DS-5			T4	SS3	105
106		X	G	7' - 0"	3' - 0"	1 3/4"	G4	1	A	5 7/8"	4 3/4"	J/A602	K/A602	24	DS-1	AA1		T2		106
107		X	W	7' - 0"	3' - 0"	1 3/4"		1	A	7 7/8"	6 3/4"	J/A602	K/A602	22	DS-1	AA1		T4		107
108		X	G	7' - 0"	3' - 0"	1 3/4"	G4	1	A	7 7/8"	6 3/4"	J/A602	K/A602	26	DS-1	AA1		T2		108
109		X	G	7' - 0"	3' - 0"	1 3/4"	G4	1	A	7 7/8"	6 3/4"	J/A602	K/A602	26	DS-1	AA1		T2		109
110		X	A	7' - 0"	3' - 0"	1 3/4"	G1	4	B	4 1/2"	8 1/2"	E/A602	F/A102	ST4	DS-3			T1	SS4	110
111		X	G	7' - 0"	3' - 0"	1 3/4"	G4	1	A	7 7/8"	6 3/4"	J/A602	K/A602	20C	DS-4	AA1			SS1	111
112		X	G	7' - 0"	3' - 0"	1 3/4"	G4	1	A	9 1/2"	8 3/8"	J/A602	K/A602	20C	DS-4	AA1			SS2	112
113		X	G	7' - 0"	3' - 0"	1 3/4"	G4	1	A	7 7/8"	6 3/4"	J/A602	K/A602	20C	DS-4	AA1			SS1	113
115		X	G	7' - 0"	3' - 0"	1 3/4"	G4	1	A	7 7/8"	6 3/4"	J/A602	K/A602	26	DS-1	AA1		T2		115
116		X	G	7' - 0"	3' - 0"	1 3/4"	G4	1	A	7 7/8"	6 3/4"	J/A602	K/A602	26	DS-1	AA1		T2		116
117		X	G	7' - 0"	3' - 0"	1 3/4"	G4	1	A	7 7/8"	6 3/4"	J/A602	K/A602	26	DS-1	AA1		T2		117
119		X	W	7' - 0"	3' - 0"	1 3/4"		1	A	7 7/8"	6 3/4"	J/A602	K/A602	24	DS-1	AA1				119
120		X	G	7' - 0"	3' - 0"	1 3/4"	G4	1	A	9 5/8"	8 1/2"	J/A602	K/A602	20C	DS-4	AA1			SS1	120
121		X	W	7' - 0"	3' - 0"	1 3/4"		1	A	7 7/8"	6 3/4"	J/A602	K/A602	24	DS-1	AA1		T2		121
122		X	W	7' - 0"	3' - 0"	1 3/4"		1	A	7 7/8"	6 3/4"	J/A602	K/A602	24	DS-1	AA1				122
123		X	G	7' - 0"	3' - 0"	1 3/4"	G4	1	A	9 5/8"	8 1/2"	J/A602	K/A602	20C	DS-4	AA1			SS1	123
124		X	W	7' - 0"	3' - 0"	1 3/4"		1	A	7 7/8"	6 3/4"	J/A602	K/A602	24	DS-1	AA1				124
126		X	G	7' - 0"	3' - 0"	1 3/4"	G4	1	A	7 7/8"	6 3/4"	J/A602	K/A602	26	DS-1	AA1		T2		126
127		X	G	7' - 0"	3' - 0"	1 3/4"	G4	1	A	7 7/8"	6 3/4"	J/A602	K/A602	26	DS-1	AA1		T2		127
128		X	G	7' - 0"	3' - 0"	1 3/4"	G4	1	A	7 7/8"	6 3/4"	J/A602	K/A602	26	DS-1	AA1		T2		128
130		X	G	7' - 0"	3' - 0"	1 3/4"	G4	1	A	7 7/8"	6 3/4"	J/A602	K/A602	20C	DS-4	AA1			SS1	130
131		X	G	7' - 0"	3' - 0"	1 3/4"	G4	1	A	9 1/2"	8 3/8"	J/A602	K/A602	20C	DS-4	AA1			SS2	131
132		X	G	7' - 0"	3' - 0"	1 3/4"	G4	1	A	7 7/8"	6 3/4"	J/A602	K/A602	20C	DS-4	AA1			SS1	132
133		X	A	7' - 0"	3' - 0"	1 3/4"	G1	4	B	4 1/2"	8 1/2"	E/A602	F/A102	ST4	DS-3			T1	SS4	133
134		X	G	7' - 0"	3' - 0"	1 3/4"	G4	1	A	7 7/8"	6 3/4"	J/A602	K/A602	26	DS-1	AA1		T2		134
135		X	G	7' - 0"	3' - 0"	1 3/4"	G4	1	A	7 7/8"	6 3/4"	J/A602	K/A602	26	DS-1	AA1		T2		135
136		X	G	7' - 0"	3' - 0"	1 3/4"	G4	1	A	7 7/8"	6 3/4"	J/A602	K/A602	26	DS-1	AA1		T2		136
137		X	W	7' - 0"	3' - 0"	1 3/4"		1	A	7 7/8"	6 3/4"	J/A602	K/A602	28	DS-5			T4	SS3	137
138		X	G	7' - 0"	3' - 0"	1 3/4"	G4	1	A	7 7/8"	6 3/4"	J/A602	K/A602	24	DS-1					138
Storage Building																				
301		X	M	7' - 0"	3' - 6"	1 3/4"		5	A	6 3/4"	9"	D/C801	E/C801	3	DS-4	AA1		T1	SS2	301

DESCRIPTIONS

GENERAL NOTES

A. Due to multiple use, some of the details referred to on the Door Schedule are reversed and / or turned from the direction shown on the floor plan. The general intent of details shall in all cases be followed and the Architect consulted should questions arise.

B. Doors shall be set to clear the finished floor surface by 1/2".

C. Hollow metal door frame throat dimensions shall be 1/8" wider than the finished wall thickness. Frame depth dimensions and wall thickness dimensions shown on the Door Schedule are to assist in preparation of bids but shall in all cases be verified prior to fabrication and installation of door frames.

D. See the Specifications for Hardware Group definitions.

E. See the Specifications for Keying definitions. Coordinate all keying with the Facilities Manager prior to installing cylinders.

F. The wall stop shown on C/A401 for the toilet partition Men's Restroom 105 shall be provided and installed by the door hardware subcontractor.

THRESHOLDS

T1 Metal threshold.
T2 Sound control threshold.
T3 Metal transition strip.
T4 Stone threshold.

DOOR STOPS

DS-1 Wall Stop.
DS-2 Overhead Stop.
DS-3 Closer with Cush-Stop Arm.
DS-4 Closer with Cush Hold-Open Arm.
DS-5 Closer with Wall Stop.

FIRE RATING

All Doors No doors on this project are fire rated.

DOOR SWING SETTINGS

SS1 Mount door hardware to allow the maximum swing opening (approximately 90°) that will engage the hold-open function while preventing contact between the door and opposing surfaces (including chair rail where occurs) even when significant force is applied to the door.

SS2 Mount door hardware to allow the maximum swing opening (approximately 110°) that will engage the hold-open function while preventing contact between the door and opposing surfaces (including chair rail where occurs) even when significant force is applied to the door.

SS3 Mount door hardware to allow a 90° swing opening without the door or hardware contacting opposing surfaces (including chair rail where occurs).

SS4 Mount door hardware to allow a 110° swing opening without the door or hardware contacting opposing surfaces (including chair rail where occurs).

REMARKS

R1 Low Energy Swing Door Operators. See A101 and Electrical Sheets.
R2 Install conduit for future access controls. See Electrical Sheets.
R3 Prep for high security cylinder.

GLASS

G1 Insulated tempered, double glaze.
G2 1/4" tempered plate, single glaze.
G3 1/4" annealed plate - single glaze.
G4 1/4" wired glazing, diamond mesh

evans + associates architecture
11576 south state street, suite 103b, draper, utah 84020
phone 801-553-8272 fax 801-553-8273

Stamp

LICENSED ARCHITECT
PAUL ANTHONY EVANS
273770
STATE OF UTAH

A New 8-Room Seminary for:
Herriman UT Mtn View Seminary
US Utah Salt Lake Valley South S&I Area
14002 Autumn Crest Blvd
Herriman, Utah

Project for:
THE CHURCH OF JESUS CHRIST OF LATTER-DAY SAINTS

Revisions	Mark	Date	Description

Project Number 18-20
Plan Series SEM18-08-1
Property Number 501341917010101
Date June 1, 2018

Sheet Title
DOOR SCHEDULE AND WINDOW TYPES

Sheet
A601

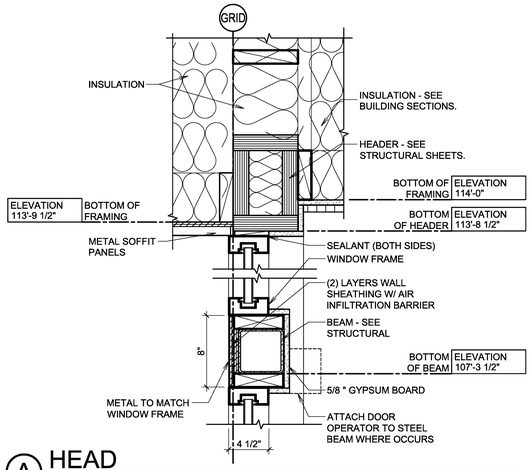

A HEAD
1 1/2" = 1'-0"

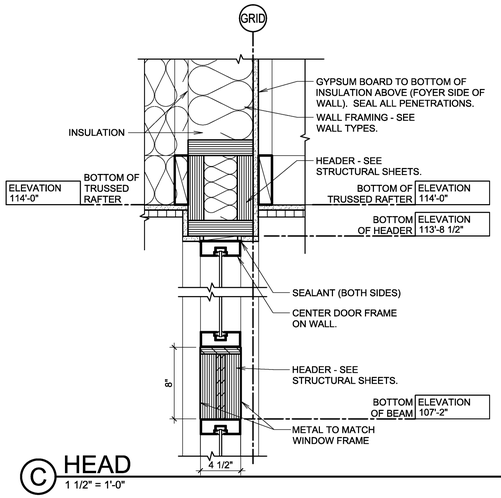

C HEAD
1 1/2" = 1'-0"

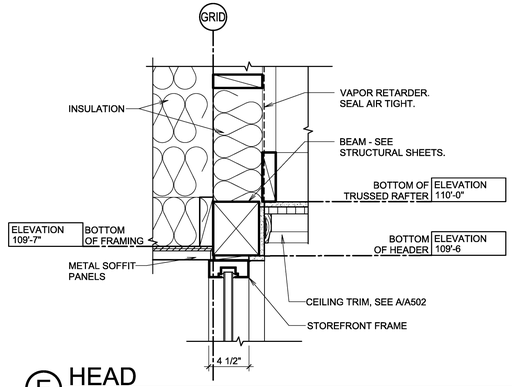

E HEAD
1 1/2" = 1'-0"

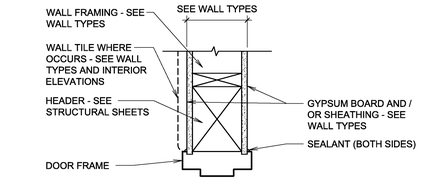

J HEAD
1 1/2" = 1'-0"

NOTE:
COORDINATE WALL CONSTRUCTION AND THICKNESS, INCLUDING LAYERS OF SHEATHING AND GYPSUM BOARD, SEE WALL TYPES AND STRUCTURAL SHEETS.

B JAMB
1 1/2" = 1'-0"

D JAMB
1 1/2" = 1'-0"

F JAMB
1 1/2" = 1'-0"

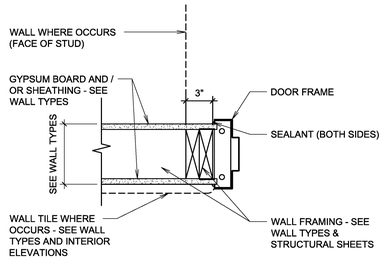

K JAMB
1 1/2" = 1'-0"

evans + associates architecture
11576 south state street, suite 103b, draper, utah 84020
phone 801-333-8272 fax 801-333-8273

Stamp

LICENSED ARCHITECT
PAUL ANTHONY EVANS
273770
STATE OF UTAH

A New 8-Room Seminary for:
Herriman UT Mtn View Seminary
US Utah Salt Lake Valley South S&I Area
14002 Autumn Crest Blvd
Herriman, Utah

Project for:
THE CHURCH OF JESUS CHRIST OF LATTER-DAY SAINTS

Revisions	Mark	Date	Description

Project Number
18-20
Plan Series
SEM18-08-1
Property Number
501341917010101
Date
June 1, 2018

Sheet Title
DOOR DETAILS

Sheet
A602

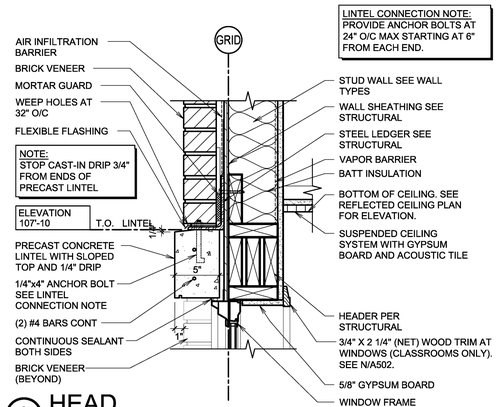

A HEAD
1 1/2" = 1'-0"

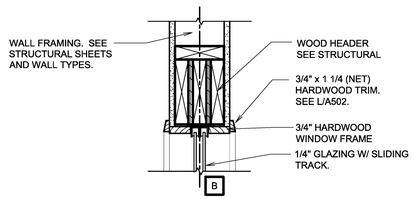

D HEAD
1 1/2" = 1'-0"

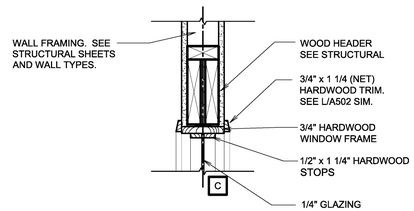

G HEAD
1 1/2" = 1'-0"

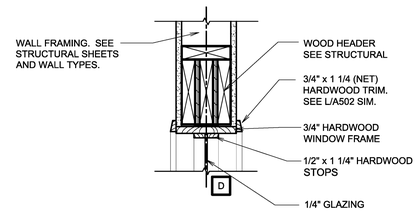

K HEAD
1 1/2" = 1'-0"

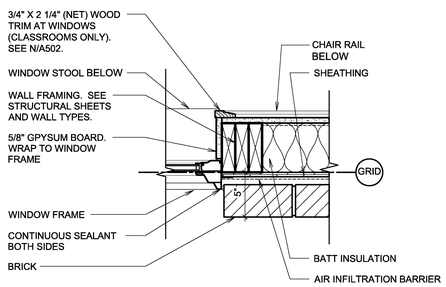

B JAMB
1 1/2" = 1'-0"

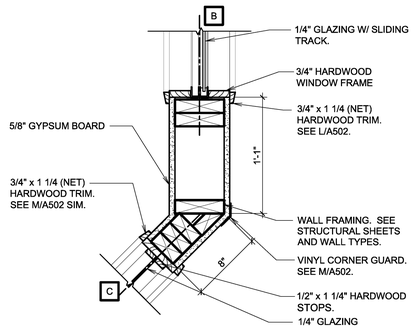

E JAMB
1 1/2" = 1'-0"

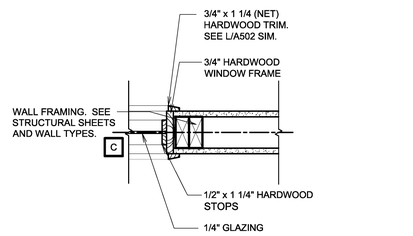

H JAMB
1 1/2" = 1'-0"

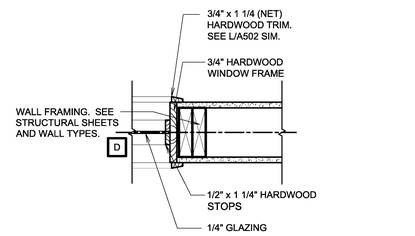

L JAMB
1 1/2" = 1'-0"

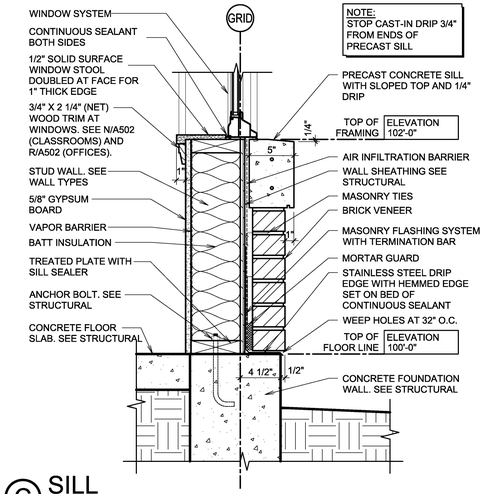

C SILL
1 1/2" = 1'-0"

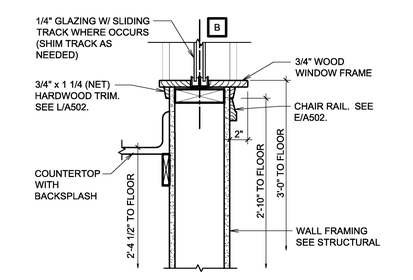

F SILL
1 1/2" = 1'-0"

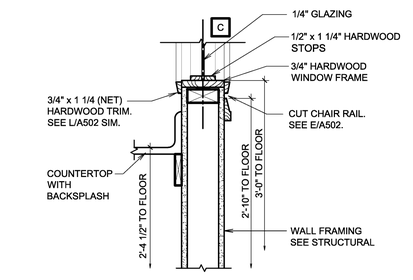

J SILL
1 1/2" = 1'-0"

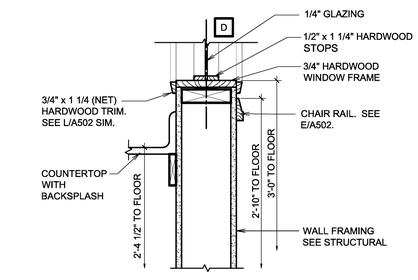

M SILL
1 1/2" = 1'-0"

evans + associates architecture
11576 south state street, suite 103b, draper, utah 84020
phone 801-333-8273 fax 801-333-8273

Stamp

LICENSED ARCHITECT
PAUL ANTHONY EVANS
273770
STATE OF UTAH

A New 8-Room Seminary for:

Herriman UT Mtn View Seminary
US Utah Salt Lake Valley South S&I Area

14002 Autumn Crest Blvd
Herriman, Utah

Project for:
THE CHURCH OF JESUS CHRIST OF LATTER-DAY SAINTS

Revisions		
Mark	Date	Description

Project Number
18-20

Plan Series
SEM18-08-1

Property Number
501341917010101

Date
June 1, 2018

Sheet Title
WINDOW DETAILS

Sheet
A603

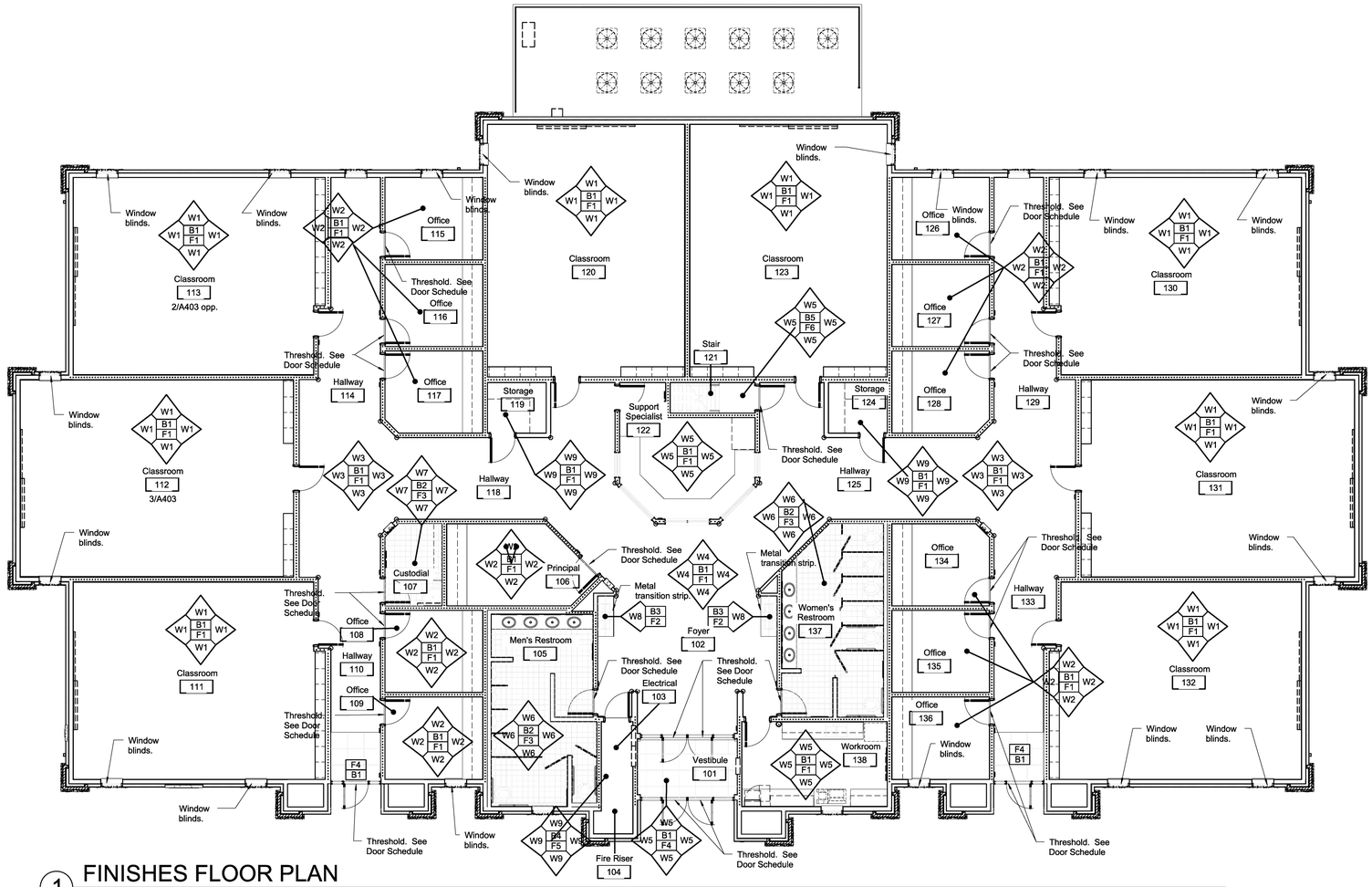

1 FINISHES FLOOR PLAN

SCALE: 1/8" = 1'-0"

NOTE:
Window blinds shall be as follows:
Mini-blinds.
2'-8" wide x 5'-2" high.
Inset mounted.
Dimensions are nominal. Field measure the actual window size for the inside mount.

○ Vinyl corner guard location.

WALL FINISH SCHEDULE

W1	Painted and textured gypsum board above chair rail. Wood chair rail. See C/A502. Wall Covering "A" wainscot below chair rail. Wood trim around windows. See C & P/A502.
W2	Painted and textured gypsum board above chair rail. Wood chair rail. See E/A502. Wall covering "A" wainscot below chair rail.
W3	Painted and textured gypsum board above chair rail. Wood chair rail. See E/A502. Wall covering "A" wainscot below chair rail. Wood trim at ceiling. See A/A502.
W4	Painted and textured gypsum board above chair rail. Wood chair rail. See E/A502. Wall covering "A" wainscot below chair rail. Wood trim at light cove. See G, K, L, & M/A152.
W5	Painted and textured gypsum board.
W6	6" x 6" ceramic wall tile with accent. See Interior Elevations.
W7	Painted and textured gypsum board with a wall tile surround at the floor sink. See Interior Elevations.
W8	12" x 12" paver tile at drinking fountains.
W9	Painted gypsum board, no texture.

BASE FINISH SCHEDULE

B1	Carpet. See L/A501.
B2	6" high x 8" wide coved paver tile. See E/A501.
B3	12" x 12" paver tile. See F/A501.
B4	4" rubber.
B5	No base.

FLOOR FINISH SCHEDULE

F1	Carpet.
F2	12" x 12" paver tile.
F3	8" x 8" paver tile.
F4	Carpet tile (walk-off mat).
F5	Painted concrete.
F6	Concrete.

evans + associates architecture
11576 south state street, suite 103s, draper, utah 84020
phone 801-333-8273
fax 801-333-8273

Stamp

LICENSED ARCHITECT
PAUL ANTHONY EVANS
273770
STATE OF UTAH

A New 8-Room Seminary for:

Herriman UT Mtn View Seminary
US Utah Salt Lake Valley South S&I Area

14002 Autumn Crest Blvd
Herriman, Utah

Project for:
THE CHURCH OF JESUS CHRIST OF LATTER-DAY SAINTS

Revisions	Mark	Date	Description

Project Number
18-20

Plan Series
SEM18-08-1

Property Number
50134191701010l

Date
June 1, 2018

Sheet Title
FINISHES PLAN AND SCHEDULES

Sheet
F101

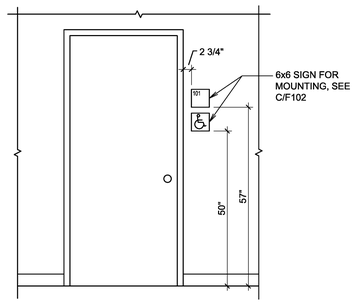

A MOLDED SIGN MOUNTING LOCATION NEXT TO DOOR

1/2" = 1'-0"

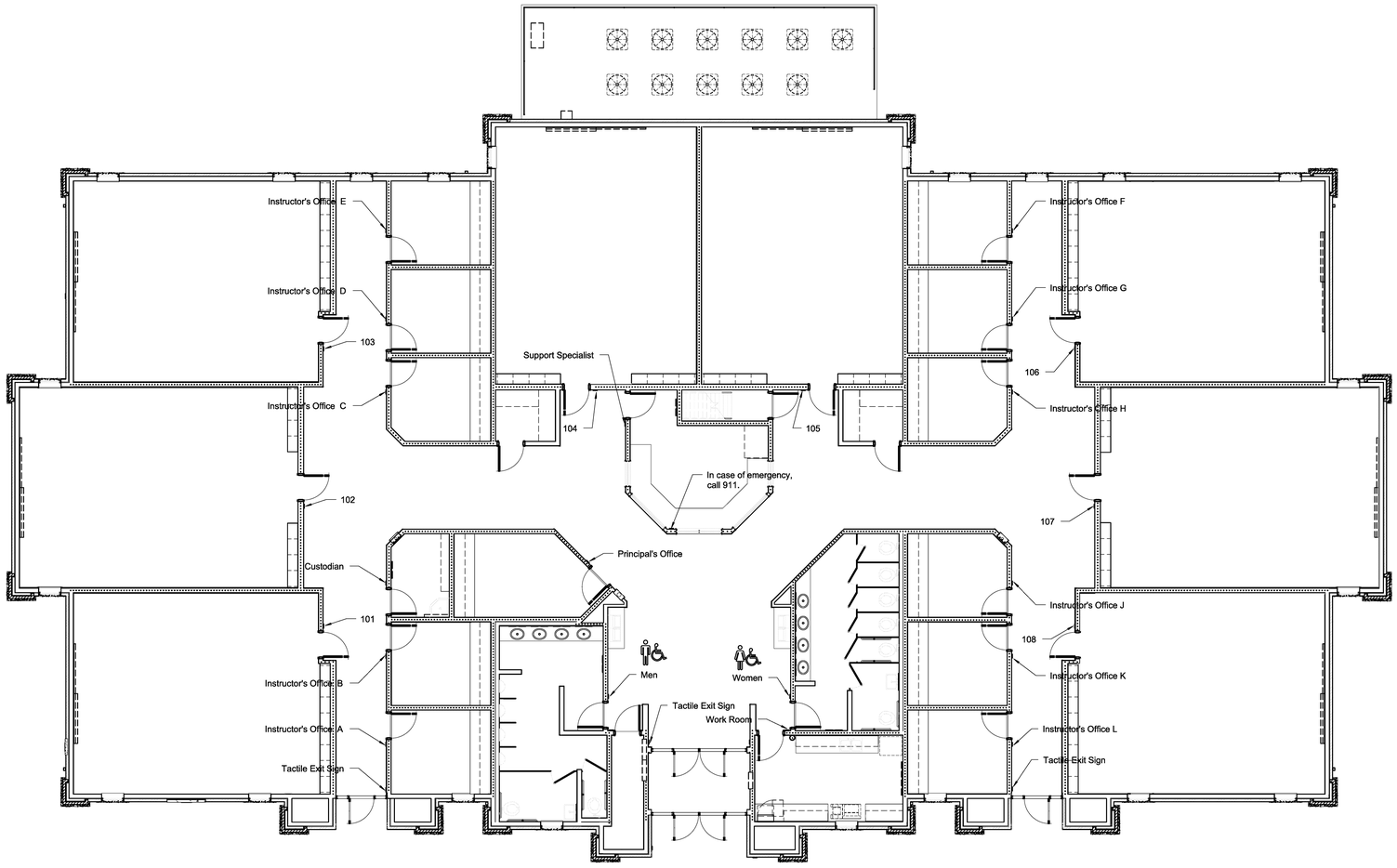

1 ROOM SIGNAGE LOCATION PLAN

SCALE: 1/8" = 1'-0"

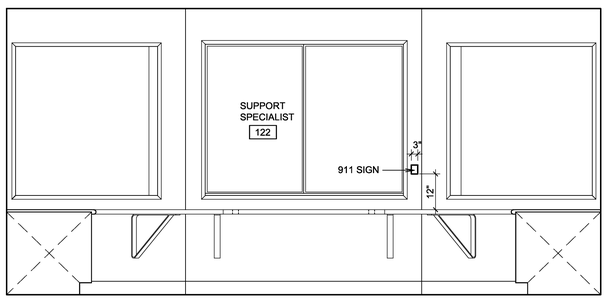

B ELEVATION

1/2" = 1'-0"

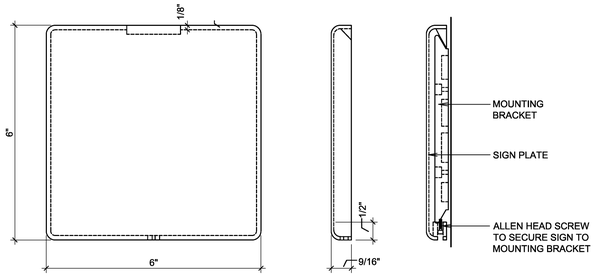

SIGN PLATE DETAIL

INSTALLATION DETAIL

C MOLDED SIGN MOUNTING DETAIL

6" = 1'-0"

NOTE:
ALL SIGNAGE SHALL INCLUDE RAISED BRAILLE LETTERING AS PROVIDED BY THE OWNER.

(COORDINATE WITH SPECIFICATIONS)

BUILDING SIGNAGE SCHEDULE

SIGNAGE ROOM NAME OR NUM.	QUANTITY	SIZE	MOUNTING	
MEN	1	6x6	A/F102	
WOMEN	1	6x6	A/F102	
	2	6x6	A/F102	
SUPPORT SPECIALIST	1	6x6	A/F102	
WORKROOM- FIRST AID KIT	1	6x6	A/F102	
CUSTODIAN	1	6x6	A/F102	
101	1	6x6	A/F102	
102	1	6x6	A/F102	
103	1	6x6	A/F102	
104	1	6x6	A/F102	
105	1	6x6	A/F102	
106	1	6x6	A/F102	
107	1	6x6	A/F102	
108	1	6x6	A/F102	
PRINCIPAL'S OFFICE	1	6x6	A/F102	
INSTRUCTOR'S OFFICE A	1	6x6	A/F102	
INSTRUCTOR'S OFFICE B	1	6x6	A/F102	
INSTRUCTOR'S OFFICE C	1	6x6	A/F102	
INSTRUCTOR'S OFFICE D	1	6x6	A/F102	
INSTRUCTOR'S OFFICE E	1	6x6	A/F102	
INSTRUCTOR'S OFFICE F	1	6x6	A/F102	
INSTRUCTOR'S OFFICE G	1	6x6	A/F102	
INSTRUCTOR'S OFFICE H	1	6x6	A/F102	
INSTRUCTOR'S OFFICE J	1	6x6	A/F102	
INSTRUCTOR'S OFFICE K	1	6x6	A/F102	
INSTRUCTOR'S OFFICE L	1	6x6	A/F102	
TACTILE EXIT SIGN	3	6x6	A/F102	
IN CASE OF EMERGENCY CALL 911	1	3x3	B/F102	SPECIFY BUILDING ADDRESS AND PHONE NUMBER

evans + associates architecture
11576 south state street, suite 103b, draper, utah 84020
phone 801-333-8272 fax 801-333-8273

Stamp

LICENSED ARCHITECT
PAUL ANTHONY EVANS
273770
STATE OF UTAH

A New 8-Room Seminary for:

Herriman UT Mtn View Seminary
US Utah Salt Lake Valley South S&I Area

14002 Autumn Crest Blvd
Herriman, Utah

Project for:

THE CHURCH OF JESUS CHRIST OF LATTER-DAY SAINTS

Revisions

Mark	Date	Description

Project Number
18-20

Plan Series
SEM18-08-1

Property Number
501341917010101

Date
June 1, 2018

Sheet Title

ROOM SIGNAGE LOCATION PLAN, SCHEDULE AND DETAILS

Sheet

F102

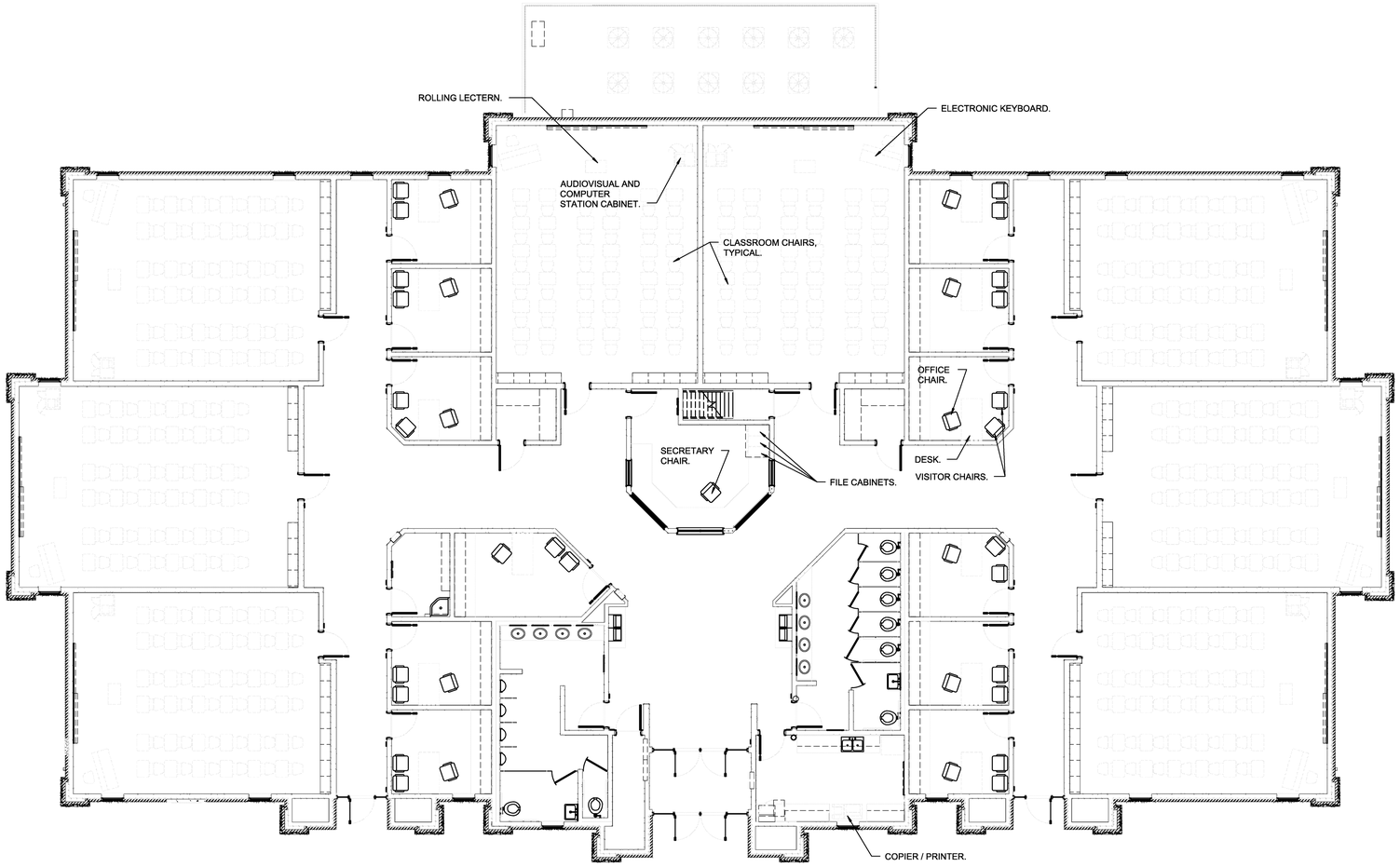

1 FURNISHINGS LAYOUT PLAN

SCALE: 1/8" = 1'-0"

evans + associates architecture
11576 south state street, suite 103b, draper, utah 84020
phone 801-553-8272 fax 801-553-8273

Stamp

LICENSED ARCHITECT
PAUL ANTHONY EVANS
273770
STATE OF UTAH

A New 8-Room Seminary for:

Herriman UT Mtn View Seminary
US Utah Salt Lake Valley South S&I Area

14002 Autumn Crest Blvd
Herriman, Utah

Project for:
THE CHURCH OF JESUS CHRIST OF LATTER-DAY SAINTS

Revisions	Mark	Date	Description

Project Number
18-20

Plan Series
SEM18-08-1

Property Number
501341917010101

Date
June 1, 2018

Sheet Title
FURNISHINGS LAYOUT PLAN

Sheet
F103

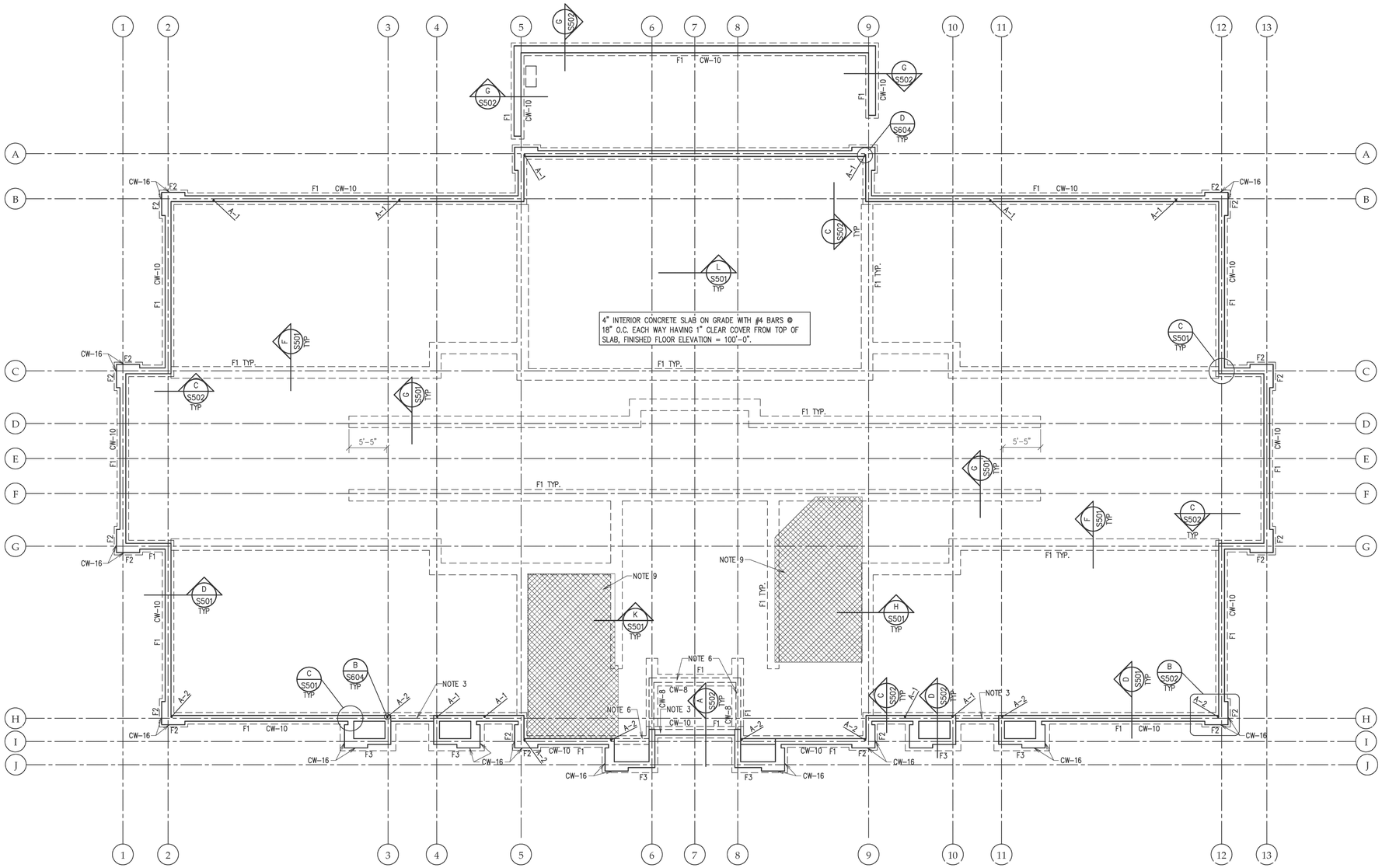

1 FOOTING AND FOUNDATION PLAN

1/8" = 1'-0"

FOOTING AND FOUNDATION LEGEND

DETAIL NUMBER / DETAIL SHEET	
S——S	INDICATES FOOTING STEP, SEE DETAIL H/S502.
	INDICATES CONCRETE WALL.
	INDICATES DEPRESSED SLAB, SEE ARCHITECTURAL PLANS.
A-x	INDICATES HOLD-DOWN TYPE, SEE SCHEDULE A/S604.
CW-x	INDICATES CONCRETE WALL. SEE SCHEDULE C/S603.
F	INDICATES CONTINUOUS CONCRETE FOOTING TYPE, SEE SCHEDULE A/S603.
-x	INDICATES FLOOR OFFSET, INCHES, SEE DETAILS
C.J.	INDICATES CONTROL JOINT

FOOTING AND FOUNDATION NOTES

NOTES:

1. TOP OF FOOTING 98'-0" TYPICAL UNLESS NOTED OTHERWISE AT ALL EXTERIOR FOOTINGS.
2. TOP OF FOOTING 99'-6" TYPICAL UNLESS NOTED OTHERWISE AT ALL INTERIOR FOOTINGS
3. RECESS FOUNDATION WALL 8" AT DOORWAYS AND POUR SLAB THRU OPENING. SEE A/S502
4. SEE DETAIL A/S501 AND B/S501 FOR PIPES PERPENDICULAR AND PARALLEL TO FOOTING.
5. SEE DETAIL C/S501 FOR TYPICAL CORNER WALL REINFORCING AT CONCRETE WALLS.
6. RECESS FOUNDATION WALL 8" AT VESTIBULE AND POUR SLAB OVER, SEE E/S502.
7. SEE DETAIL E/S501 FOR SILL PLATES BOLTING DETAIL.
8. SEE DETAIL M/S501 FOR STRUCTURAL FILL BENEATH FOOTINGS AND THICKENED SLABS.
9. DEPRESS FLOOR SEE ARCH FOR DIMENSIONS
10. BLOCK OUT FOR THRESHOLD AT DOOR. VERIFY SIZE WITH TILE INSTALLER.
11. NO CONSTRUCTION OR CONTRACTION JOINTS SHALL BE ALLOWED IN THE BUILDING FLOOR SLAB UNLESS APPROVED BY THE ARCHITECT.
12. SPOT FOOTINGS ARE TO BE CENTERED UNDER COLUMN OR HOLD DOWN.
13. SEE DETAIL E/S502 WHERE SPOT FOOTINGS AND CONTINUOUS FOOTINGS ARE PLACED AT DIFFERENT TIMES.
14. SEE ARCH FOR DIMENSIONS
15. SEE S102 FOR WOOD FRAMED WALL LOCATIONS AND SCHEDULE A/S602 FOR ANCHOR BOLT REQUIREMENTS.

evans + associates architecture
11576 south state street, suite 103b, draper, utah 84020
phone 801-553-8272 fax 801-553-8273

Stamp

08/01/2018

A New 8-Room Seminary for:

Herriman UT Mtn View Seminary
US Utah Salt Lake Valley South S&I Area

Autumn Crest Blvd
Herriman, Utah

Project for:

THE CHURCH OF JESUS CHRIST OF LATTER-DAY SAINTS

Revisions

Mark	Date	Description

Project Number
18-20

Plan Series
SEM18-08-1

Property Number
501341917010101

Date
June 1, 2018

Sheet Title
FOOTING AND FOUNDATION PLAN

Sheet
S101

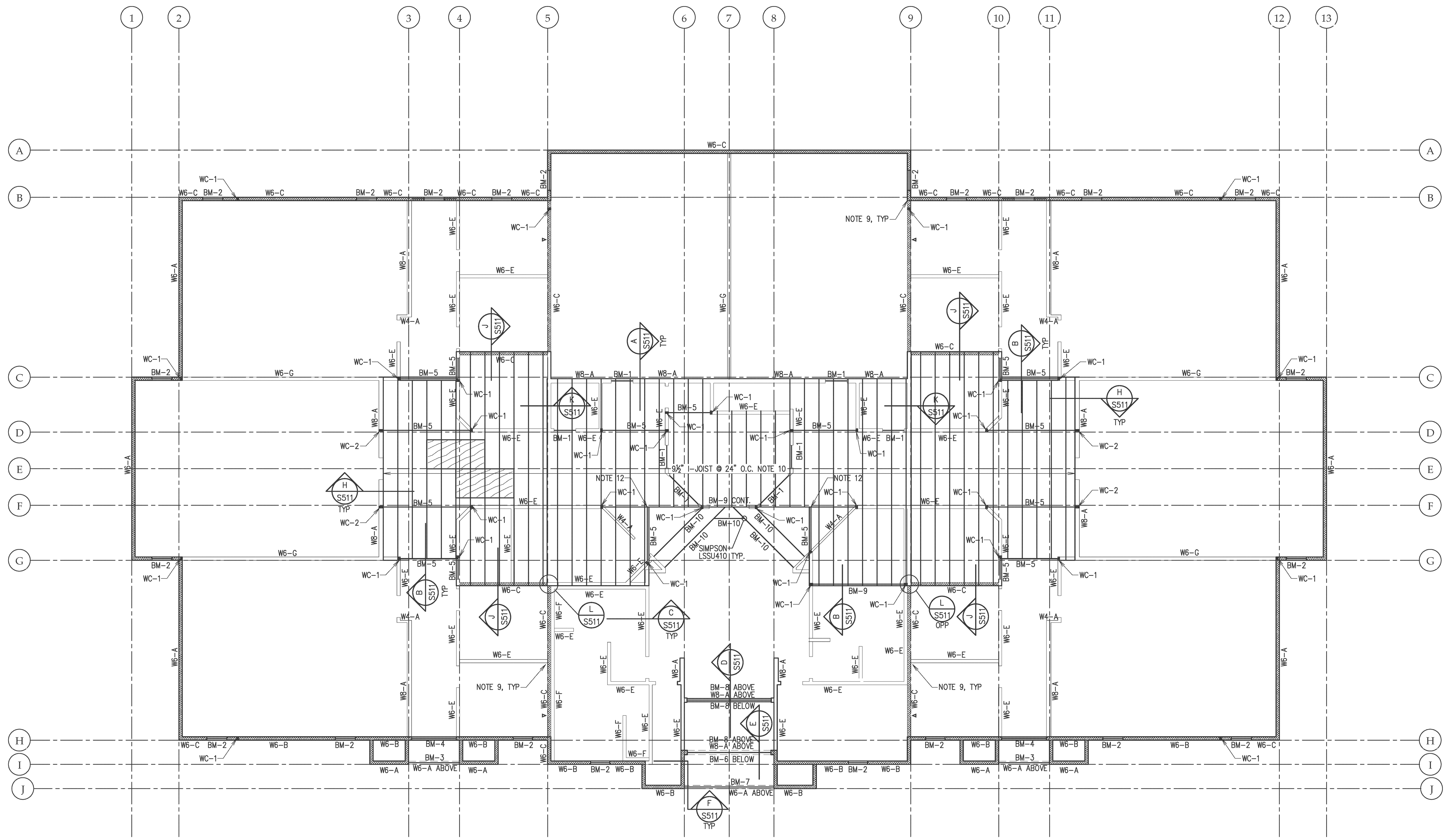

① WALL AND EQUIPMENT PLATFORM FRAMING PLAN

1/8" = 1'-0"

WALL/EQUIPMENT PLATFORM LEGEND

- DETAIL NUMBER
- DETAIL SHEET
- INDICATES WOOD SHEAR WALL
- INDICATES SIDE OF WALL WOOD SHEATHING IS TO BE INSTALLED.
- INDICATES WOOD ROOF OR FLOOR SHEATHING, SEE SCHEDULE B/S601

WX–x	INDICATES WOOD WALL. SEE SCHEDULE A/S602.
WC–x	INDICATES WOOD COLUMN. SEE SCHEDULE B/S602.
BM–x	INDICATES WOOD BEAM. SEE SCHEDULE C/S602.

WALL/EQUIPMENT PLATFORM NOTES

NOTES:

1. SEE DETAIL C/S521 FOR TYPICAL TOP PLATE SPLICE DETAIL.
2. SEE DETAIL D/S521 FOR TOP PLATE SPLICE DETAIL FOR PIPES THAT PENETRATE TOP PLATES.
3. SEE SCHEDULE C/S602 FOR BUILT–UP BEAM DETAIL.
4. SEE SCHEDULES ON SHEETS S601 AND S602 FOR WALL, ROOF AND FLOOR SHEATHING AND NAILING REQUIREMENTS.
5. SEE DETAILS A/S522 FOR SHEAR WALL PENETRATIONS.
6. SEE ARCHITECTURAL PLANS FOR EQUIPMENT PLATFORM ELEVATIONS AND ACCESS.
7. FOR UNMARKED INTERIOR HEADERS, USE (3) 2x6 FOR 2x6 WALLS AND (2) 2x6 FOR 2x4 WALLS. USE (1) TRIMMER AND (1) KING STUD.
8. ALL DIMENSIONS ARE TO FACE OF STUD WALL NOT TO SHEATHING
9. WALL SHEATHING CONT. BEHIND PERPENDICULAR WALL.
10. LL=40 PSF DL=15 PSF MAX TOTAL DEFLECTION=0.65"
11. SEE ARCH FOR DIMENSIONS
12. SIMPSON HU410. FILL ALL ROUND & TRIANGULAR NAIL HOLES

EQUIPMENT PLATFORM LOADING

DEAD LOAD = 12 PSF
LIVE LOAD = 40 PSF
TOTAL LOAD = 52 PSF

evans + associates architecture
11576 south state street, suite 103b, draper, utah 84020
phone 801-553-8272 fax 801-553-8273

Stamp

LICENSED PROFESSIONAL STRUCTURAL ENGINEER
CHRISTIAN LEE HOFHEINS
323828-2203
STATE OF UTAH
06/01/2018

A New 8-Room Seminary for:

Herriman UT Mtn View Seminary
US Utah Salt Lake Valley South S&I Area

Autumn Crest Blvd
Herriman, Utah

Project for:

THE CHURCH OF JESUS CHRIST OF LATTER-DAY SAINTS

Revisions		
Mark	Date	Description

Project Number
18-20

Plan Series
SEM18-08-1

Property Number
501341917010101

Date
June 1, 2018

Sheet Title
WALL AND EQUIPMENT PLATFORM FRAMING PLAN

Sheet
S102

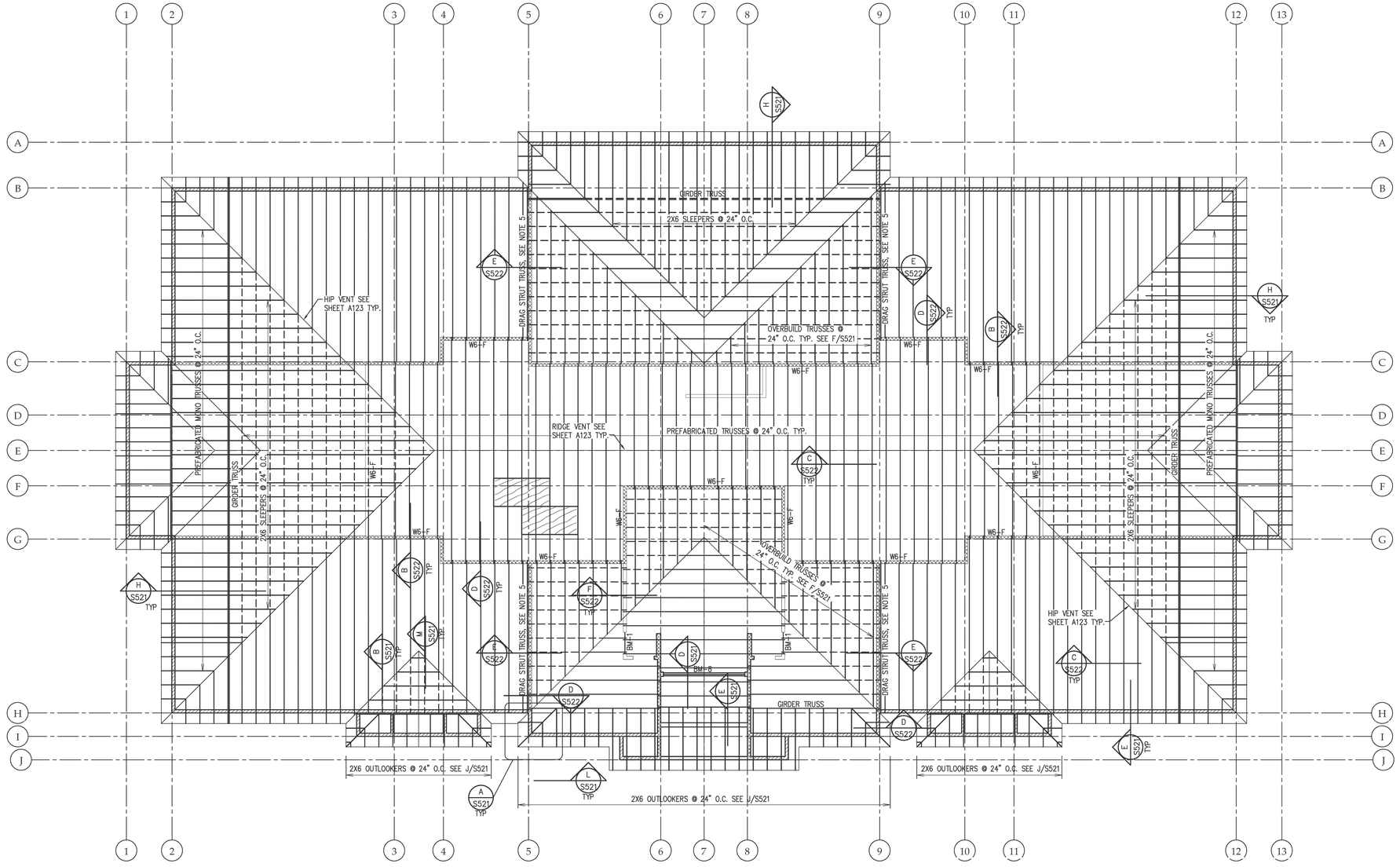

1 ROOF FRAMING PLAN
1/8" = 1'-0"

ROOF LEGEND

- DETAIL NUMBER / DETAIL SHEET
- INDICATES EXTERIOR WOOD STUD WALL.
- INDICATES WOOD BEARING WALL.
- INDICATES WOOD ROOF OR FLOOR SHEATHING, SEE SCHEDULE B/S601.
- WX-x — INDICATES WOOD WALL. SEE SCHEDULE A/S602.

ROOF FRAMING NOTES

NOTES:

1. SEE DETAIL C/S521 FOR TYPICAL TOP PLATE SPLICE DETAIL.
2. SEE DETAIL D/S521 FOR TOP PLATE SPLICE DETAIL WHERE PIPES PENETRATE TOP PLATES.
3. SEE SCHEDULE C/S602 FOR BUILT-UP BEAM DETAIL.
4. SEE SCHEDULES ON SHEETS S601 AND S602 FOR WALL, ROOF, AND FLOOR NAILING REQUIREMENTS.
5. DRAG STRUT TRUSS. F=431 PLF. SEE E/S522 FOR ATTACHMENT TO SHEAR WALLS
6. COORDINATE TRUSS WEBS WITH HVAC DUCTS. SEE MECHANICAL PLANS.
7. ADD 2X4 WEB FOR INSULATION BACKING PARALLEL TO TOP CHORD OF ALL TRUSSES, SEE ARCHITECTURAL.
8. SL=33 PSF DL=20 PSF TRUSS LOAD
9. SEE ARCH FOR DIMENSIONS

ROOF LOADING

ASPHALT SHINGLES	= 4.0 psf
TRUSSES	= 4.0 psf
SHEATHING	= 2.5 psf
CEILING/INSULATION	= 4.0 psf
MECHANICAL	= 1.0 psf
LIGHTING	= 1.0 psf
COLLATERAL	= 3.5 psf
TOTAL DEAD LOAD	= 20 psf
SNOW LOAD	= 37 psf
TOTAL ROOF LOAD	= 57 psf

evans + associates architecture
11576 south state street, suite 103b, draper, utah 84020
phone 801-553-8272
fax 801-553-8273

Stamp
LICENSED PROFESSIONAL ENGINEER — CHRISTIAN LEE HOFHEINS — 363828-2203 — STATE OF UTAH
06/01/2018

A New 8-Room Seminary for:
Herriman UT Mtn View Seminary
US Utah Salt Lake Valley South S&I Area
Autumn Crest Blvd
Herriman, Utah

Project for:
THE CHURCH OF JESUS CHRIST OF LATTER-DAY SAINTS

Revisions	Mark	Date	Description

Project Number 18-20
Plan Series SEM18-08-1
Property Number 501341917010101
Date June 1, 2018

Sheet Title
ROOF FRAMING PLAN

Sheet
S103

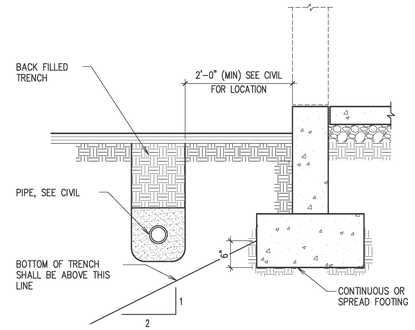

A CONDITION AT PIPE PARALLEL TO CONCRETE FOOTING
NO SCALE

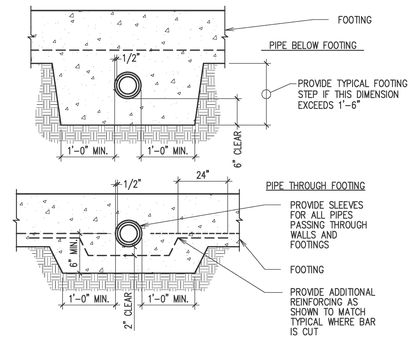

B CONDITION AT PIPE PERP. TO CONCRETE FOOTING
NO SCALE

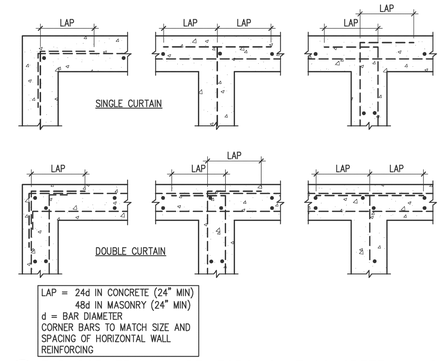

C TYP CORNER WALL REINFORCING AT CONCRETE WALLS (PLAN VIEW)
NO SCALE

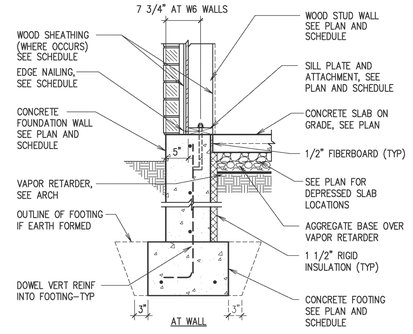

D TYP EXTERIOR FOUNDATION WALL
NO SCALE

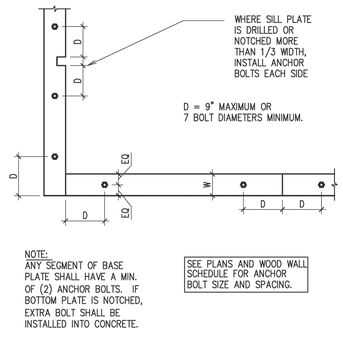

E SILL PLATE BOLTING DETAIL
NO SCALE

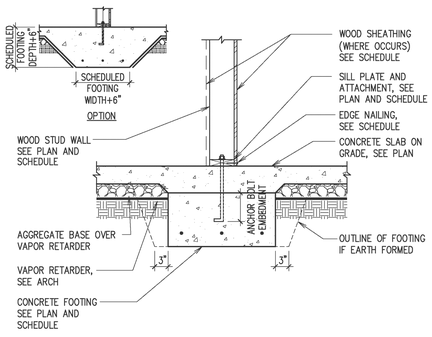

F TYPICAL INTERIOR CONCRETE FOOTING
NO SCALE

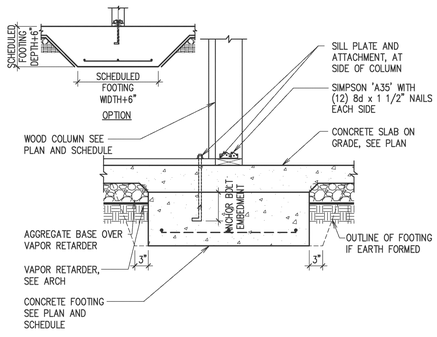

G INTERIOR WOOD COLUMN TO FOOTING DETAIL
NO SCALE

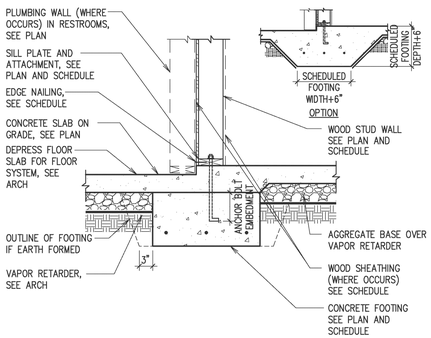

H BEARING WALL DETAIL AT FLOOR OFFSET
NO SCALE

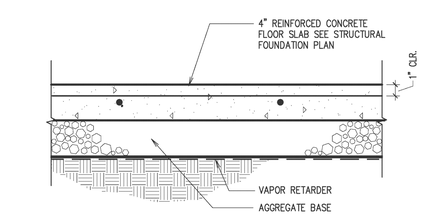

J TYPICAL INTERIOR SLAB-ON-GRADE
NO SCALE

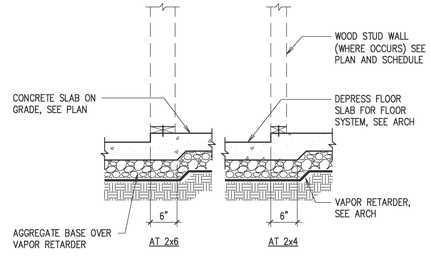

K WOOD STUD WALL AT FLOOR OFFSET
NO SCALE

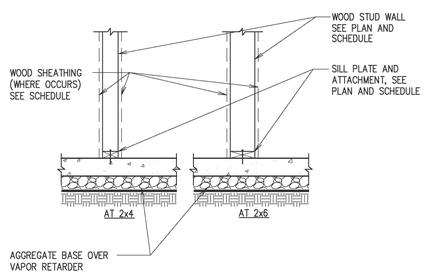

L TYP NON-BEARING STUD AT SLAB-ON-GRADE
NO SCALE

evans + associates architecture
11576 south state street, suite 103b, draper, utah 84020
phone 801-553-8272
fax 801-553-8273

Stamp

08/01/2018

A New 8-Room Seminary for:

Herriman UT Mtn View Seminary
US Utah Salt Lake Valley South S&I Area

Autumn Crest Blvd
Herriman, Utah

Project for:
THE CHURCH OF JESUS CHRIST OF LATTER-DAY SAINTS

Revisions	Mark	Date	Description

Project Number
18-20

Plan Series
SEM18-08-1

Property Number
501341917010101

Date
June 1, 2018

Sheet Title
FOUNDATION DETAILS

Sheet
S501

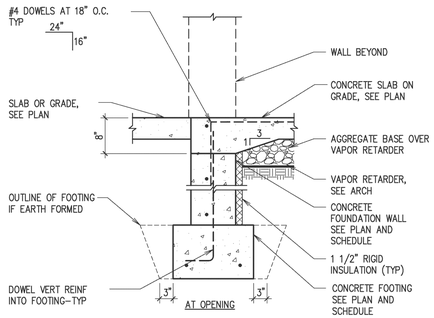

A TYP EXTERIOR FOUNDATION WALL
NO SCALE

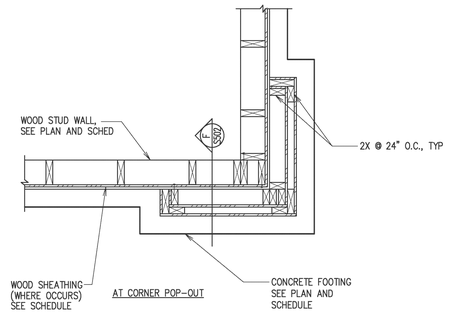

B EXTERIOR FOUNDATION POP–OUT [PLAN VIEW]
NO SCALE

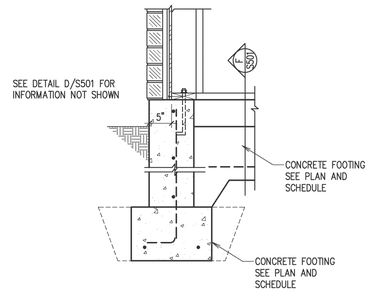

C INTERIOR FOOTING AT EXTERIOR FOUNDATION WALL
NO SCALE

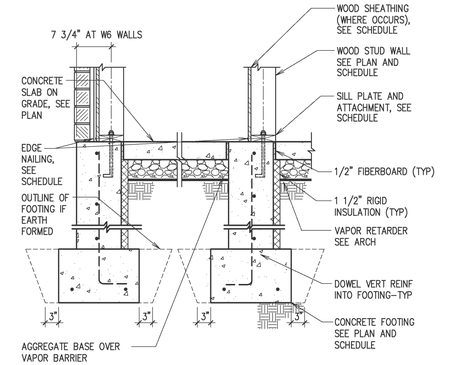

D ENTRY POP–OUT FOUNDATION DETAIL
NO SCALE

E TYP EXTERIOR FOUNDATION WALL
NO SCALE

F TYP EXTERIOR FOUNDATION WALL
NO SCALE

G MECHANICAL ENCLOSURE DETAIL
NO SCALE

evans + associates architecture
11576 south state street, suite 103b, draper, utah 84020
phone 801-553-8272 fax 801-553-8273

Stamp

CHRISTIAN LEE HOFHEINS 323825-2203 STATE OF UTAH LICENSED ARCHITECT PROFESSIONAL SEAL

08/01/2018

A New 8-Room Seminary for:

Herriman UT Mtn View Seminary
US Utah Salt Lake Valley South S&I Area

Autumn Crest Blvd
Herriman, Utah

Project for:
THE CHURCH OF JESUS CHRIST OF LATTER-DAY SAINTS

Revisions		
Mark	Date	Description

Project Number
18-20

Plan Series
SEM18-08-1

Property Number
501341917010101

Date
June 1, 2018

Sheet Title
FOUNDATION DETAILS

Sheet
S502

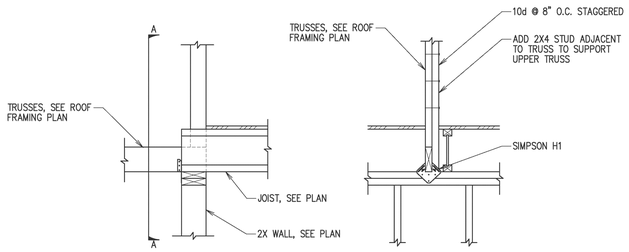

A DETAIL
NO SCALE

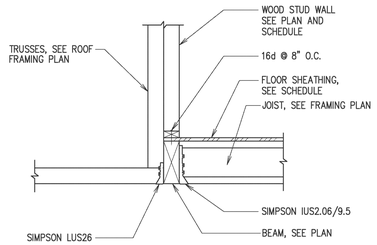

B DETAIL
NO SCALE

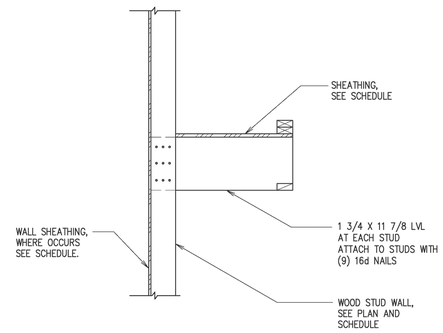

C LIGHT COVE DETAIL
NO SCALE

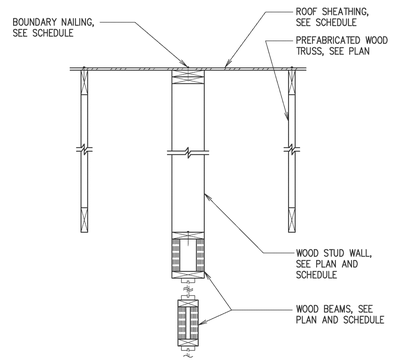

D WOOD BEAM AT VESTIBULE
NO SCALE

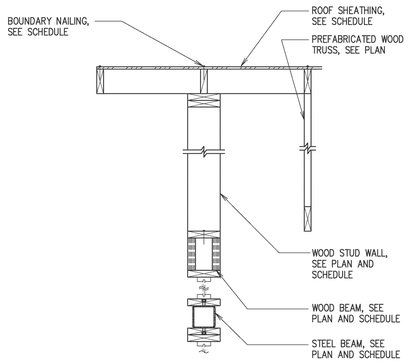

E UPPER AND LOWER BEAMS AT VESTIBULE
NO SCALE

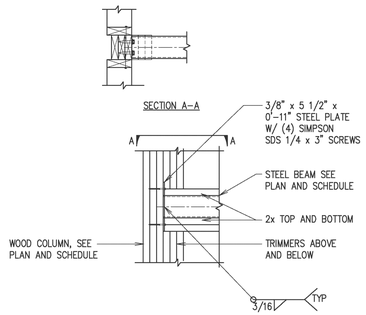

F LOWER BEAM AT VESTIBULE
NO SCALE

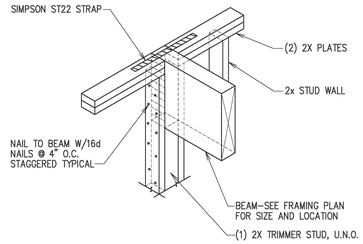

G BEAM CONNECTION
NO SCALE

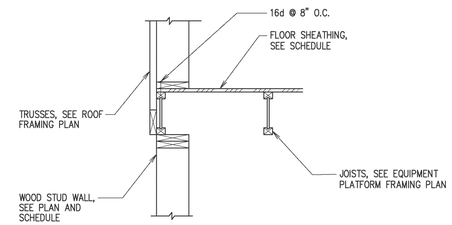

H DETAIL
NO SCALE

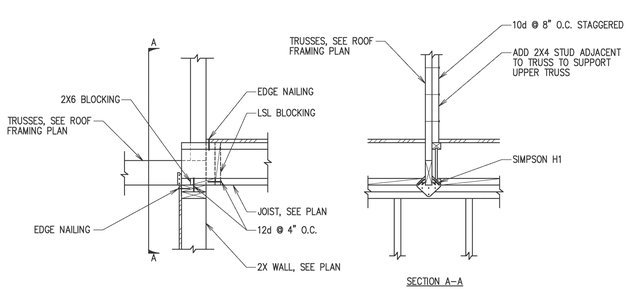

J DETAIL
NO SCALE

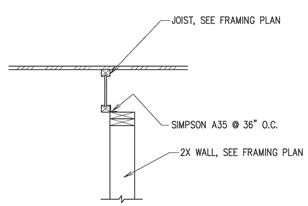

K DETAIL
NO SCALE

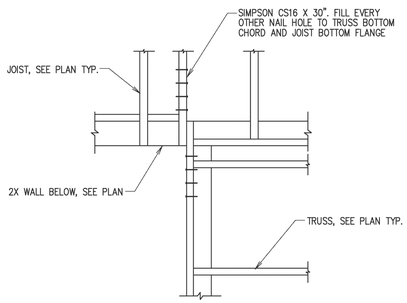

L DETAIL
NO SCALE

evans + associates architecture
1 1576 south state street, suite 103b, draper, utah 84020
phone 801-553-8272 fax 801-553-8273

Stamp

CHRISTIAN LEE HOFHEINS 323825-2203 LICENSED ARCHITECT STATE OF UTAH

08/01/2018

A New 8-Room Seminary for:

Herriman UT Mtn View Seminary
US Utah Salt Lake Valley South S&I Area

Autumn Crest Blvd
Herriman, Utah

Project for:
THE CHURCH OF JESUS CHRIST OF LATTER-DAY SAINTS

Revisions		
Mark	Date	Description

Project Number 18-20
Plan Series SEM18-08-1
Property Number 501341917010101
Date June 1, 2018

Sheet Title
FRAMING DETAILS

Sheet
S511

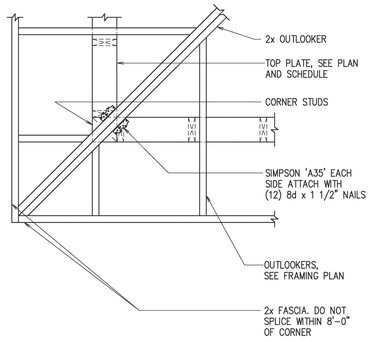

A CORNER SOFFIT FRAMING [PLAN VIEW]
NO SCALE

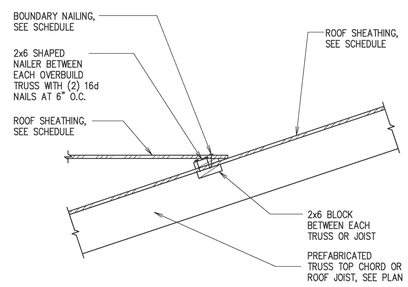

B OVERBUILD BETWEEN EACH OVERBUILD TRUSS
NO SCALE

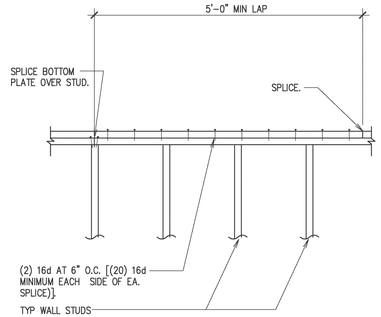

C TYP TOP PLATE SPLICE DETAIL
NO SCALE

TOP PLATE SPLICE	
HOLE SIZE	STRAPS
LESS THAN OR EQUAL TO 1/3 STUD WIDTH	NONE REQUIRED
GREATER THAN 1/3 AND LESS THAN OR EQUAL TO 2/3 STUD WIDTH	(2) RPS18 WITH (4) 16d x 3 1/2" NAILS EACH END
GREATER THAN 2/3 STUD WIDTH	(2) RPS22 WITH (8) 16d x 3 1/2" NAILS EACH END

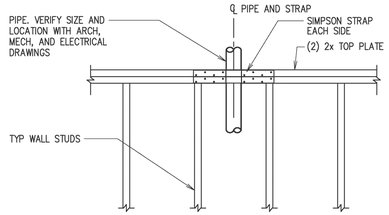

D TOP PLATE SPLICE SCHEDULE AT PIPE
NO SCALE

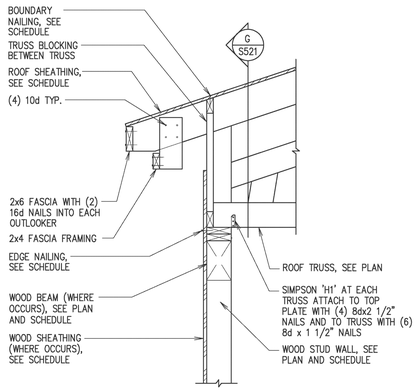

E TRUSS BEARING AT EXTERIOR WOOD STUD WALL
NO SCALE

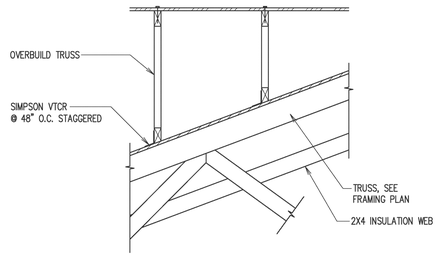

F OVERBUILD TRUSS CONNECTION
NO SCALE

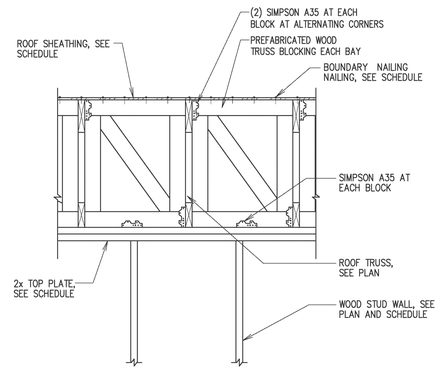

G BLOCKING CONDITION BETWEEN TRUSSES
NO SCALE

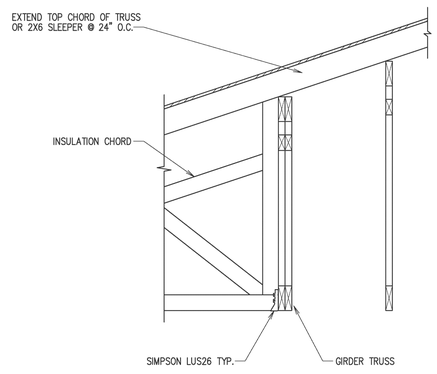

H TRUSS CONNECTION
NO SCALE

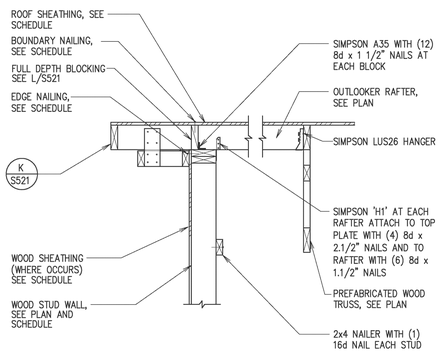

J EAVE DETAIL AT OUTLOOKERS
NO SCALE

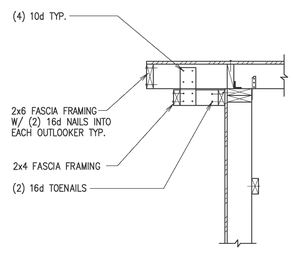

K SOFFIT DETAIL
NO SCALE

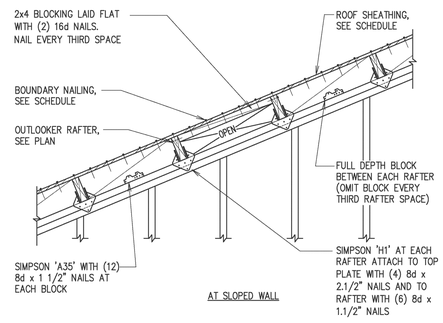

L SOLID BLOCKING AND ANCHORING DETAIL
NO SCALE

evans + associates architecture
11576 south state street, suite 103b, draper, utah 84020
phone 801-553-8272 fax 801-553-8273

Stamp

05/01/2018

A New 8-Room Seminary for:

Herriman UT Mtn View Seminary
US Utah Salt Lake Valley South S&I Area

Autumn Crest Blvd
Herriman, Utah

Project for:
THE CHURCH OF JESUS CHRIST OF LATTER-DAY SAINTS

Revisions			
Mark	Date	Description	

Project Number	18-20
Plan Series	SEM18-08-1
Property Number	501341917010101
Date	June 1, 2018

Sheet Title
ROOF DETAILS

Sheet
S521

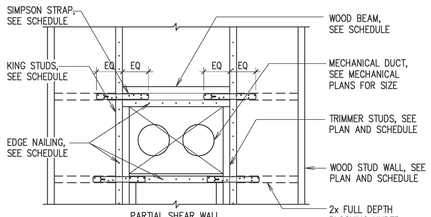

PARTIAL SHEAR WALL ELEVATION

BEAM SPAN	BEAM SIZE	TRIMMER	KING STUD	HORIZONTAL SIMPSON STRAP	NAILS
1'–3"	(3) 2x6	(1) 2x	(1) 2x	CS22 x 1'–6"	(14) 8d x 2 1/2"
3'–5"	(3) 2x10	(1) 2x	(1) 2x	CS18 x 2'–0"	(22) 8d x 2 1/2"
5'–7"	(3) 2x12	(1) 2x	(2) 2x	CS16 x 2'–4"	(26) 8d x 2 1/2"

SEE DETAIL C/S521 FOR OPENINGS < 9' SQUARE

(A) WALL ELEVATION WITH MECHANICAL OPENING
NO SCALE

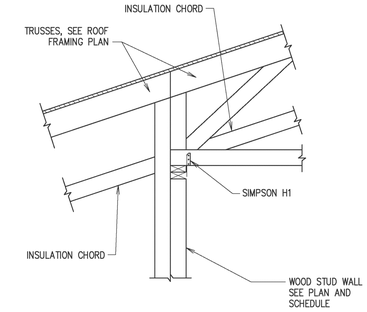

(B) DETAIL
NO SCALE

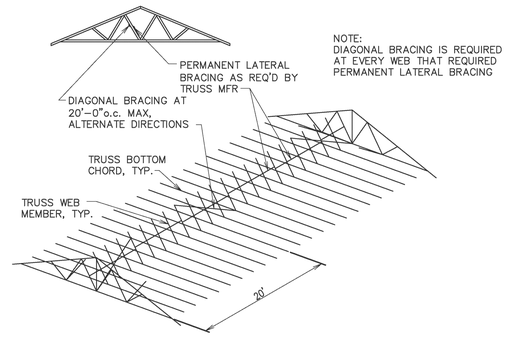

(C) DETAIL
NO SCALE

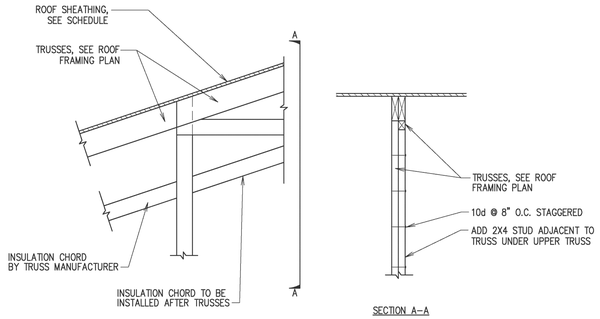

SECTION A–A

(D) DETAIL
NO SCALE

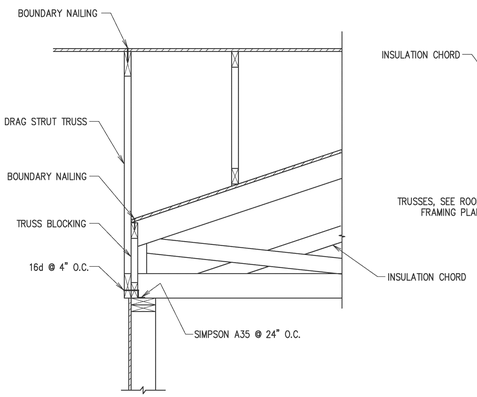

(E) DRAG STRUT CONNECTION
NO SCALE

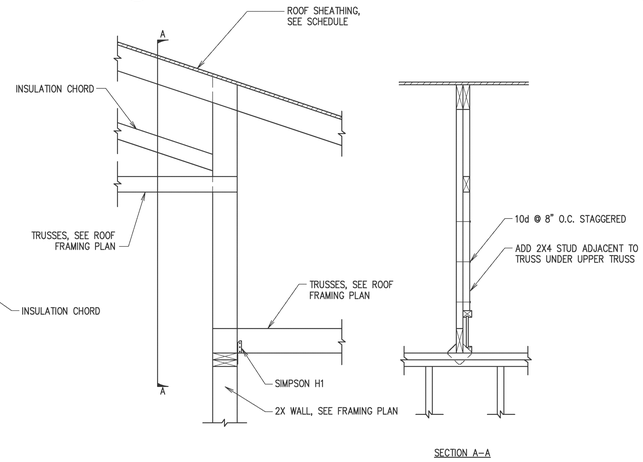

SECTION A–A

(F) TRUSS TO BEAM CONNECTION
NO SCALE

evans + associates architecture
11576 south state street, suite 103b, draper, utah 84020
phone 801-553-8272
fax 801-553-8273

Stamp

08/01/2018

A New 8-Room Seminary for:

Herriman UT Mtn View Seminary
US Utah Salt Lake Valley South S&I Area

Autumn Crest Blvd
Herriman, Utah

Project for:
THE CHURCH OF JESUS CHRIST OF LATTER-DAY SAINTS

Revisions

Mark	Description	Date

Project Number
18-20

Plan Series
SEM18-08-1

Property Number
501341917010101

Date
June 1, 2018

Sheet Title
ROOF DETAILS

Sheet
S522

SCHEDULE A

DESIGN CRITERIA

DESIGN CRITERIA	2015 INTERNATIONAL BUILDING CODE (ASCE 7-10)	
SEISMIC	RISK CATEGORY	III
	IBC SEISMIC IMPORTANCE FACTOR	I_E = 1.25
	MAPPED SPECTRAL RESPONSE ACCELERATION:	
	MAPPED VALUE OF S_S (FOR ALL CALCULATIONS EXCEPT C_S)	S_S = 1.124
	VALUE OF S_S USED TO CALCULATE C_S	S_S = 1.124
	S_1	S_1 = 0.375
	SOIL SITE CLASS	D
	SITE COEFFICIENT F_a	F_a = 1.0
	SITE COEFFICIENT F_v	F_v = 1.5
	DESIGN SPECTRAL RESPONSE ACCELERATION PARAMETERS	S_{DS} = 0.787
		S_{D1} = 0.412
	SEISMIC DESIGN CATEGORY	D
	BASIC SEISMIC-FORCE RESISTING SYSTEM. LIGHT FRAMED WALLS SHEATHED WITH WOOD PANELS:	
	RESPONSE MODIFICATION FACTOR	R = 6.5
	OVERSTRENGTH FACTOR	W_O = 3.0
	ANALYSIS PROCEDURE USED. (EQUIVALENT LATERAL FORCE PROCEDURE)	
	SEISMIC RESPONSE COEFFICIENT - ULTIMATE	C_S = 0.121
WIND	ASCE WIND SPEED (3 SECOND GUST)	120 M.P.H.
	EXPOSURE CATEGORY	C
	WIND IMPORTANCE FACTOR	I_W= 1.0
ROOF	DEAD LOAD	20 P.S.F.
	ROOF SNOW LOAD - THIS LOAD REFLECTS ROOF SNOW LOAD MULTIPLIED BY THE SNOW IMPORTANCE FACTOR (VALUE SHOWN DOES NOT INCLUDE DRIFT LOAD)	37 P.S.F.
	SNOW IMPORTANCE FACTOR	I_S= 1.1
	BUILDING ELEVATION	4817 FT
MECHANICAL ACCESS	DEAD LOAD	12 P.S.F.
	LIVE LOAD	40 P.S.F.
SOIL BEARING	PER GSH REPORT #0153-345-17, DATED MARCH 16, 2018	3000 P.S.F.

SCHEDULE B

SHEATHING TYPE AND NAILING SCHEDULE

LOCATION	SHEATHING	EDGE NAILING[1]	FIELD NAILING[1]	BOUNDARY NAILING[2]	BLOCKING AT PANEL EDGES
ROOF, UNBLOCKED	19/32" 40/20 SPAN RATING	10d AT 6" O.C.	10d AT 6" O.C.	10d AT 6" O.C.	NO
WALLS	SEE WOOD WALL SCHEDULE A/S602				
EQUIPMENT PLATFORM	23/32" 48/24 SPAN RATING	10d AT 6" O.C.	10d AT 12" O.C.	10d AT 6" O.C.	NO

1. SEE PARTIAL PLAN BELOW FOR LOCATION OF BOUNDARY, EDGE, AND FIELD NAILING.
2. SEE SCHEDULE E/S603 FOR TABLE OF EQUIVALENT FASTENERS, STAPLES AND NAILS FOR ADJUSTED FASTENER SPACING.
3. ALL FASTENERS, INCLUDING NAILS IN PRESERVATIVE TREATED WOOD, SHALL BE HOT DIPPED ZINC COATED GALVANIZED STEEL, STAINLESS STEEL, SILICON BRONZE, OR COPPER UNLESS SILL PLATE IS BORATE TREATED OR IS OF LSL MATERIAL.
4. MECHANICAL ACCESS AND ROSTRUM SHEATHING SHALL BE GLUED AND NAILED TO THE STRUCTURE

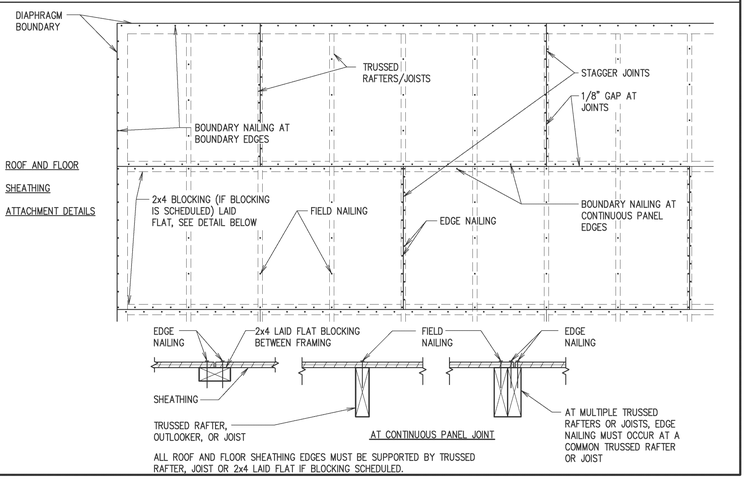

ALL ROOF AND FLOOR SHEATHING EDGES MUST BE SUPPORTED BY TRUSSED RAFTER, JOIST OR 2x4 LAID FLAT IF BLOCKING SCHEDULED.

SCHEDULE C

QUALITY ASSURANCE (TESTING AND INSPECTION)

QUALITY ASSURANCE (TESTING AND INSPECTION) AS REQUIRED BY THE OWNER AND SECTIONS 1704 THRU 1709 OF THE IBC, SHALL BE PROVIDED BY AN INDEPENDENT AGENCY EMPLOYED BY THE OWNER. THE CONTRACTOR SHALL COORDINATE AND COOPERATE WITH THE REQUIRED INSPECTIONS. ALL TESTING AND INSPECTION REPORTS SHALL BE SENT WITHIN 24 HOURS OF COMPLETION OF THE TEST OR INSPECTION TO THE OWNER, ARCHITECT, APPLICABLE ENGINEER, BUILDING OFFICIAL AND GENERAL CONTRACTOR. ITEMS REQUIRING QUALITY ASSURANCE (TESTING AND INSPECTION) ARE:

1. SOILS/ENGINEERED FILL (IBC SECTION 1704.7 AND TABLE 1704.7):
   - A. REFER TO SPECIFICATIONS FOR ADDITIONAL AND SPECIFIC TESTING AND INSPECTION REQUIREMENTS
   - B. PRIOR TO PLACEMENT OF THE PREPARED FILL, THE INSPECTOR SHALL DETERMINE THAT THE SITE HAS BEEN PREPARED IN ACCORDANCE WITH THE SOILS REPORT
   - C. DURING PLACEMENT AND COMPACTION OF THE FILL MATERIAL, THE INSPECTOR SHALL DETERMINE THAT THE MATERIAL BEING USED AND THE MAXIMUM LIFT THICKNESS COMPLIES WITH THE GEOTECHNICAL REPORT
   - D. THE INSPECTOR SHALL DETERMINE THAT THE IN-PLACE DRY DENSITY OF THE ENGINEERED FILL MATERIAL COMPLIES WITH THE GEOTECHNICAL REPORT
     - I. CONTINUOUS FOOTING ENGINEERED FILL: SEE SPECIFICATIONS
     - II. SPOT FOOTING ENGINEERED FILL: SEE SPECIFICATIONS
     - III. SITE WORK ENGINEERED FILL (PAVED AREAS, SIDEWALKS, TRENCHES, ETC): SEE SPECIFICATIONS.
     - IIII. BUILDING PAD ENGINEERED FILL: SEE SPECIFICATIONS
2. CONCRETE (IBC SECTION 1704.4 AND TABLE 1704.4):
   - A. REFER TO SPECIFICATIONS FOR SPECIFIC TESTING AND INSPECTION REQUIREMENTS
   - B. CYLINDERS, SLUMP, TEMPERATURE, AND AIR-ENTRAINMENT TESTS SHALL BE PREFORMED
   - C. CONCRETE TO BE PROTECTED DURING COLD AND HOT WEATHER
3. PREFABRICATED METAL PLATE WOOD TRUSSES (IBC SECTIONS 1704.2 AND 1704.6)
   - A. REFER TO SPECIFICATIONS FOR CERTIFICATION REQUIREMENTS
   - B. THE INSPECTOR SHALL VERIFY THAT THE FABRICATOR MAINTAINS DETAILED FABRICATION AND QUALITY CONTROL PROCEDURES THAT PROVIDE A BASIS OF INSPECTION CONTROL OF THE WORKMANSHIP AND THE FABRICATOR'S ABILITY TO CONFORM TO APPROVED CONSTRUCTION DOCUMENTS AND REFERENCED STANDARDS
   - C. REFER TO SPECIFICATIONS FOR INSPECTION OF PREFABRICATED WOOD TRUSSES LONGER THAN 60' LONG
4. WOOD DIAPHRAGMS AND SHEAR WALLS (IBC SECTION 1704.6 AND 1707.3)
   - A. FOR WALLS AND ROOF AREAS WHERE THE NAIL SPACING IS 4 INCHES AND LESS ON CENTER, THE INSPECTOR SHALL VERIFY WOOD PANEL SHEATHING, GRADE, AND THICKNESS, NOMINAL SIZE OF FRAMING MEMBERS, NAIL SIZE AND SPACING, BOLTING, SILL PLATE AND ANCHOR BOLTS, AND OTHER FASTENING OF COMPONENTS
   - B. ALL HOLDOWNS SHALL BE INSPECTED TO VERIFY CONFORMANCE WITH CONTRACT DOCUMENTS
5. EPOXY ANCHORS (IBC SECTION 1704.15):
   - A. REFER TO SPECIFICATIONS FOR ADDITIONAL AND SPECIFIC TESTING AND INSPECTION REQUIREMENTS
   - B. INSPECTION SHALL VERIFY ALL DRILLED HOLE SIZES AND DEPTHS PRIOR TO INSTALLATION OF EPOXY AND ANCHOR ROD. SEE SPECIFICATIONS FOR QUANTITY OF TESTING
6. MASONRY (IBC SECTION 1704.5):
   - A. TESTING AND INSPECTION OF MASONRY IS NOT REQUIRED

SCHEDULE D

SITE OBSERVATIONS BY STRUCTURAL ENGINEER

SITE OBSERVATIONS SHALL BE DONE BY THE ENGINEER OF RECORD OR AN APPROVED LICENSED STRUCTURAL ENGINEER. THE CONTRACTOR SHALL NOTIFY THE ENGINEER WHEN HE HAS REACHED THE CONSTRUCTION STAGE LISTED BELOW AND BEFORE THE WORK TO BE OBSERVED IS COVERED UP, BECOMES HIDDEN FROM VIEW, OR BECOMES INACCESSIBLE. THIS IS TO PROVIDE THE STRUCTURAL ENGINEER THE OPPORTUNITY TO PERFORM A SITE OBSERVATION AT HIS/HER DISCRETION AT THAT POINT. AT THE CONCLUSION OF THE PROJECT, THE STRUCTURAL OBSERVER SHALL SUBMIT TO THE BUILDING OFFICIAL A WRITTEN STATEMENT THAT THE SITE VISITS HAVE BEEN MADE AND IDENTIFY ANY REPORTED DEFICIENCIES THAT HAVE NOT BEEN RESOLVED (SEE IBC SECTION 1709.1).

1. PRIOR TO CONCRETE FOOTING POURS
2. AFTER SUBSTANTIAL WALL WOOD FRAMING IS COMPLETED
3. AFTER SUBSTANTIAL PORTION OF WOOD SHEAR WALLS ARE NAILED
4. AFTER WOOD ROOF SHEATHING IS NAILED AND PRIOR TO ROOFING

SCHEDULE E

DEFERRED SUBMITTALS

FOR THE PURPOSE OF THIS SECTION, DEFERRED SUBMITTALS ARE DEFINED PER SECTION 106.3.4.2 OF THE IBC. SUBMITTAL DOCUMENTS FOR DEFERRED SUBMITTAL ITEMS SHALL BE SUBMITTED TO THE ENGINEER, ARCHITECT, AND BUILDING OFFICIAL FOR THEIR REVIEW FOR GENERAL CONFORMANCE WITH THE DESIGN OF THE BUILDING. DEFERRED STRUCTURAL SUBMITTALS FOR THIS PROJECT ARE:

1. PREFABRICATED METAL PLATE WOOD TRUSSES

SCHEDULE F

SCHEDULE OF CONSTRUCTION MATERIALS

CONCRETE	LOCATION	28-DAY COMPRESSIVE STRENGTH
	FOOTINGS	3,000 P.S.I. MIX TYPE B
	FOUNDATION WALLS	4,500 P.S.I. MIX TYPE B
	INTERIOR SLABS ON GRADE	3,000 P.S.I. MIX TYPE A
	NOTES: 1. CONCRETE STRENGTH USED IN DESIGN IS 2500 P.S.I.	2. SEE SPECIFICATIONS 03-3111 FOR DEFINITION OF MIX TYPE.
STRUCTURAL STEEL	APPLICATION	MATERIAL
	SQUARE OR RECTANGULAR HSS	ASTM A500 (46ksi) GRADE B
	WIDE FLANGE SECTIONS	ASTM A992 (50ksi)
	OTHER SHAPES AND PLATES	ASTM A36 (36ksi)
	NOTES: 1. WELDING OF STRUCTURAL STEEL SHALL BE ACCORDANCE WITH AWS D1.1	
REINFORCING STEEL	FIELD BENT BARS	ALL OTHER BARS
	ASTM A615, GRADE 40 OR GRADE 60 (SEE LAP SPLICE SCHEDULE H/S003 FOR LAP LENGTHS)	ASTM A615, GRADE 60 (SEE LAP SPLICE SCHEDULE H/S003 FOR LAP LENGTHS)
MASONRY	MATERIAL	SPECIFICATION
	CONCRETE MASONRY UNITS (CMU)	LIGHTWEIGHT GRADE N, TYPE 1 (MIN. UNIT STRENGTH OF 1900 PSI) f'm = 1500 PSI. ASTM C90
	MORTAR	TYPE "S", 1,800 PSI MINIMUM COMPRESSIVE STRENGTH
	GROUT	2,000 PSI MINIMUM COMPRESSIVE STRENGTH

WOOD

DIMENSION LUMBER

APPLICATION	SPECIES AND MINIMUM GRADE (ANY SPECIES AND GRADE LISTED MAY BE USED FOR ANY OF THE DESCRIBED APPLICATIONS).		
TOP PLATES, STRUTS, ROOF JOISTS, FLOOR JOISTS, MISC. FRAMING, HEADERS, BEAMS, LEDGERS	DOUGLAS FIR-LARCH HEM FIR MSR	#2 OR BETTER #1 OR BETTER 1650F - 1.5E OR BETTER	
BLOCKING	DOUGLAS FIR-LARCH HEM FIR MSR	#2 OR BETTER #2 OR BETTER 1650F - 1.5E OR BETTER	
POSTS AND TIMBERS 5" x 5" AND LARGER	DOUGLAS FIR-LARCH	#1 OR BETTER	
SILL PLATES	DOUGLAS FIR-LARCH HEM FIR LVL	2x4, 1 1/2"x3 1/2" LVL STANDARD OR BETTER STANDARD OR BETTER 1.3E	2x6, 2x8, 2x10, 1 1/2"x9 1/2" LVL, 1 1/2"x11 7/8" LVL #2 OR BETTER #2 OR BETTER 1.5E
TRUSSED RAFTERS (CHORDS AND WEBS)	DOUGLAS FIR-LARCH HEM FIR MSR	#2 OR BETTER #1 OR BETTER 1650F - 1.5E OR BETTER	
EXTERIOR WALL STUDS AND INTERIOR STRUCTURAL WALL STUDS	DOUGLAS FIR-LARCH HEM FIR LVL	2x4 STUD GRADE OR BETTER STUD GRADE OR BETTER	2x6 #2 OR BETTER #2 OR BETTER
INTERIOR NON-STRUCTURAL WALL STUDS	DOUGLAS FIR-LARCH HEM FIR	2x4 STANDARD, UTILITY, CONSTRUCTION, OR BETTER STANDARD, UTILITY, CONSTRUCTION, OR BETTER	2x6 #2 OR BETTER #2 OR BETTER

LAMINATED VENEER LUMBER (LVL)

	MINIMUM PROPERTY VALUES[1] - P.S.I.				
	Fb	Fv	Fc ⊥	Fc ||	E x 10^6
1-3/4" x ALL DEPTHS	2,600	285	750	2,510	1.9
3-1/2" x ALL DEPTHS	2,400	285	750	2,510	1.7

GLUED LAMINATED BEAMS

	MINIMUM PROPERTY VALUES[1] - P.S.I.				
	Fb TENSION ZONE	Fb COMPRESSION ZONE STRESSED IN TENSION	Fv	Fc	E x 10^6
24F-V4 DF/DF OR 24F-E4 SP/SP WITH STRESS CLASS 24F-1.8E	2400	1200	265	1600	1.8

NOTES:

1. DESIGN VALUES ARE FOR NORMAL DURATION. REPETITIVE FRAMING FACTORS AND SIZE FACTORS HAVE NOT BEEN APPLIED.
2. 1 3/4" LVL MEMBERS MAY BE USED TO REPLACE 1 1/2" LVL MEMBERS. ADJUST DIMENSIONS IN PLANS AND DETAILS ACCORDINGLY.
3. LIMIT THE MODULUS OF ELASTICITY OF 1 1/2" MEMBERS TO 1.7x10 psi.

evans + associates architecture
11576 south state street, suite 103b, draper, utah 84020
phone 801-553-8272 fax 801-553-8273

Stamp

CHRISTIAN LEE HOPKINS 323825-2203 LICENSED PROFESSIONAL ENGINEER STATE OF UTAH

06/01/2018

A New 8-Room Seminary for:

Herriman UT Mtn View Seminary

US Utah Salt Lake Valley South S&I Area

Autumn Crest Blvd
Herriman, Utah

Project for:

THE CHURCH OF JESUS CHRIST OF LATTER-DAY SAINTS

Revisions		
Mark	Date	Description

Project Number
18-20

Plan Series
SEM18-08-1

Property Number
501341917010101

Date
June 1, 2018

Sheet Title
SCHEDULES

Sheet
S601

SCHEDULE A

WOOD WALL SCHEDULE

MARK	WALL STUDS	STUD SPACING	SILL	TOP PLATE	WOOD SHEATHING THICKNESS AND TYPE	COMMENT	FASTENERS	EDGE NAIL (OR E.N.) SPACING	FIELD NAIL (OR F.N.) SPACING	ATTACHMENT TO WOOD SILL	SILL ATTACHMENT
W4–A	1 1/2" x 3 1/2" LVL	16" O.C.	2x4	(2) 2x4	NO WOOD SHEATHING		–	–	–	–	POWDER ACTUATED FASTENERS AT 24" O.C.
W4–B	2x4	16" O.C.	2x4	(2) 2x4	NO WOOD SHEATHING		–	–	–	–	POWDER ACTUATED FASTENERS AT 24" O.C.
W6–A	2x6	16" O.C.	2x6	(2) 2x6	7/16" APA RATED		8d NAILS	6" O.C.	12" O.C.	8d NAILS AT 6" O.C.	5/8" DIA x 7" EMBEDMENT AT 32" O.C.
W6–B*	2x6	16" O.C.	2x6	(2) 2x6	7/16" APA RATED		8d NAILS	4" O.C.	12" O.C.	8d NAILS AT 4" O.C.	5/8" DIA x 7" EMBEDMENT AT 32" O.C.
W6–C*	2x6 (NOTE B)	16" O.C.	2x6	(2) 2x6	7/16" APA RATED		8d NAILS	3" O.C.	12" O.C.	8d NAILS AT 3" O.C.	5/8" DIA x 7" EMBEDMENT AT 32" O.C.
W6–D*	1 3/4" x 5 1/2" LVL (NOTE B)	12" O.C.	2x6	(2) 2x6	7/16" APA RATED		8d NAILS	3" O.C.	12" O.C.	8d NAILS AT 2" O.C.	5/8" DIA x 7" EMBEDMENT AT 32" O.C. IN CONCRETE
W6–E	1 1/2" x 5 1/2" LVL	16" O.C.	2x6	(2) 2x6	NO WOOD SHEATHING		–	–	–	–	POWDER ACTUATED FASTENERS AT 24" O.C.
W6–F	2x6	16" O.C.	2x6	(2) 2x6	NO WOOD SHEATHING		–	–	–	–	POWDER ACTUATED FASTENERS AT 24" O.C.
W6–G	2X4	8" O.C. STAGGERED	2x6	(2) 2x6	NO WOOD SHEATHING		–	–	–	–	POWDER ACTUATED FASTENERS AT 24" O.C.
W8–A	1 1/2" x 7 1/4" LVL	16" O.C.	2x8	(2) 2x8	NO WOOD SHEATHING		–	–	–	–	POWDER ACTUATED FASTENERS AT 24" O.C.

SCHEDULE NOTES:

1. 5/8"ø ANCHOR BOLTS MAY BE REPLACED WITH 5/8"ø BY MANUFACTURER SPECIFIED EMBEDMENT CONCRETE SCREW ANCHORS OR EXPANSION/WEDGE ANCHORS. THE SCREW ANCHORS MAY BE POWERS "WEDGE-BOLT+" (ICC ESR-2526), SIMPSON "TITEN HD" (ICC ESR-2713). THE EXPANSION/WEDGE ANCHORS MAY BE POWERS "POWER-STUD+ SD1" (ICC ESR-1917), HILTI "KWIK BOLT TZ" (ICC ESR-1917), OR SIMPSON "STRONG-BOLT" (ICC ESR-1771). CLEAN HOLE WITH OIL FREE COMPRESSED AIR BEFORE INSTALLING BOLT.
2. SEE ARCHITECTURAL PARTITION TYPES FOR FINISHES NOT SHOWN.
3. ALL WOOD IN CONTACT WITH CONCRETE SHALL BE PRESSURE TREATED.
4. ALL FASTENERS, INCLUDING NAILS IN PRESERVATIVE TREATED WOOD, SHALL BE HOT-DIPPED ZINC COATED GALVANIZED STEEL, STAINLESS STEEL, SILICON BRONZE, OR COPPER UNLESS SILL PLATE IS BORATE TREATED OR IS OF LSL MATERIAL.
5. ALL NAILS TO BE HEAD MARKED FOR EASY IDENTIFICATION AFTER INSTALLATION.
6. POWDER ACTUATED FASTENERS TO BE HILTI 'X-DNI 72P8' OR EQUIVALENT.
7. (*) INDICATES SPECIAL INSPECTION REQUIRED.
8. 1 3/4" THICK STUDS MAY REPLACE 1 1/2" THICK STUDS AT CONTRACTOR'S OPTION.

ELEVATION NOTES:

A. WHEN SHEATHING BOTH SIDES, STAGGER SHEATHING ON OPPOSITE SIDES OF SHEAR WALL SO VERTICAL AND HORIZONTAL JOINTS DO NOT ALIGN AT A COMMON STUD OR BLOCKING MEMBER.
B. WHERE NAIL SPACING IS 3" OR LESS, MEMBERS AT ADJOINING PANEL EDGES SHALL NOT BE LESS THAN 3" NOMINAL. JOINT AND SILL NAILING SHALL BE STAGGERED. BLOCK AT ALL PANEL JOINTS. ALTERNATIVELY, (2) 2X STUDS MAY BE SUBSTITUTED AT PANEL JOINTS. NAIL TOGETHER WITH (2) 16d @ 4" O.C. SEE B/S522
C. ALL WOOD SHEATHING SHALL BE INSTALLED WITH LONG DIMENSION ACROSS STUDS.
D. ALL SHEATHING SHALL HAVE A SPAN RATING OF 24/0 OR BETTER U.N.O.
E. SHEATHING MAY BE INSTALLED IN STACKED INSTEAD OF RUNNING PATTERN AT CONTRACTOR'S OPTION, IF STUDS ARE SPACED @ 16" O.C. MAX.
F. ALL WALL SHEATHING SHALL COMPLY WITH PS1–95 OR PS2–92.

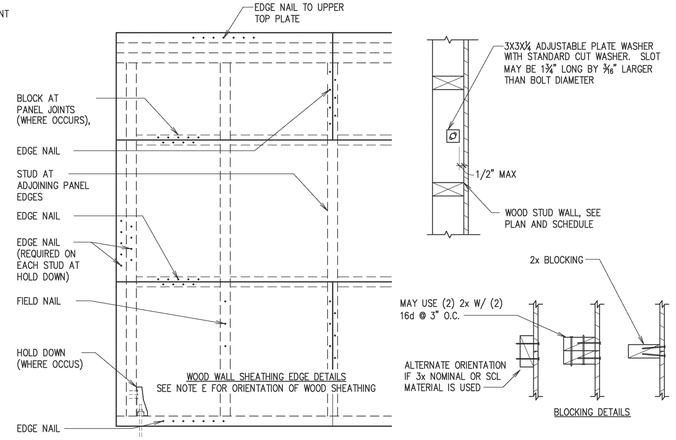

WOOD WALL SHEATHING EDGE DETAILS
SEE NOTE E FOR ORIENTATION OF WOOD SHEATHING

BLOCKING DETAILS

SCHEDULE B

WOOD COLUMN SCHEDULE

MARK	BEARING STUD(S)	KING STUD(S) (EACH SIDE)	COMMENTS
WC–1	(2) 2X6		
WC–2	(2) 2X8	–	

NOTES:

1. USE 16d NAILS TO BUILD UP COLUMN.
2. ADJACENT NAILS ARE TO BE DRIVEN FROM OPPOSING SIDES OF COLUMN.
3. 3 1/2" WIDE COLUMNS REQUIRE ONE ROW OF STAGGERED NAILS. ALL OTHER COLUMNS REQUIRE TWO ROWS OF NAILS.
4. KING STUDS EXTEND FROM BOTTOM WALL PLATE TO BOTTOM OF TOP WALL PLATES.
5. BEARING STUDS EXTEND FROM BOTTOM WALL PLATE TO UNDER–SIDE OF BEAM OR HEADER.
6. ALL FASTENERS, INCLUDING NAILS IN PRESERVATIVE TREATED WOOD, SHALL BE HOT DIPPED ZINC COATED GALVANIZED STEEL, STAINLESS STEEL, SILICON BRONZE, OR COPPER UNLESS SILL PLATE IS BORATE TREATED OR IS OF LSL MATERIAL

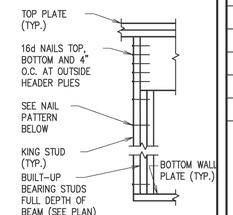

AT HEADER

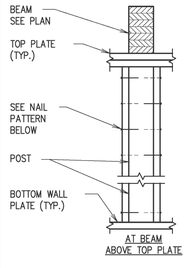

AT BEAM ABOVE TOP PLATE

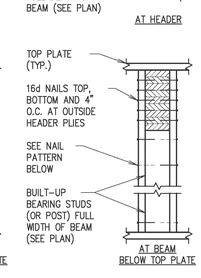

AT BEAM BELOW TOP PLATE

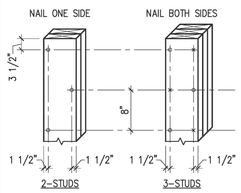

2–STUDS 3–STUDS

LEGEND
° NAIL FROM THIS SIDE
× NAIL FROM OPPOSITE SIDE

SCHEDULE C

BEAM SCHEDULE

HEADER MARK	HEADER AND TYPE	JAMB		COMMENTS
		BEARING STUDS	KING STUDS	
BM–1	(2) 2x6	1	1	
BM–2	(3) 2x6	1	1	
BM–3	(3) 2x10	1	1	
BM–4	5 1/8" x 6" GLB	1	2	
BM–5	(2) 1 3/4" x 9 1/2" LVL	1	1	
BM–6	HSS 5X5X1/4	3	3	SEE F/S511
BM–7	(3) 1 3/4" x 11 7/8" LVL	2	2	
BM–8	(2) 1 3/4" x 7 1/4" LVL	1	2	BOX BEAM
BM–9	(4) 1 3/4" x 9 1/2" LVL	3	2	
BM–10	(2) 1 3/4" X 11 7/8" LVL	2	–	

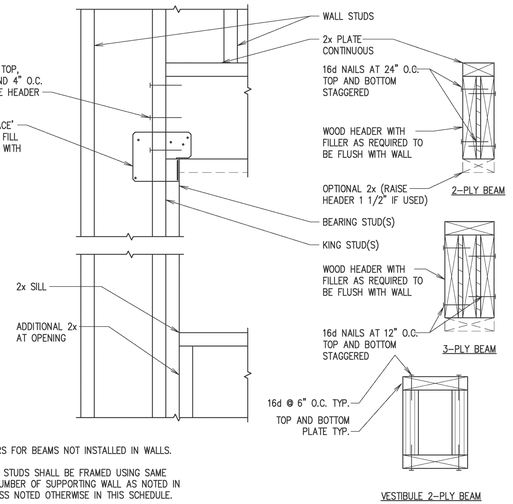

VESTIBULE 2–PLY BEAM

NOTES:
1. DO NOT USE FILLERS FOR BEAMS NOT INSTALLED IN WALLS.

2. BEARING AND KING STUDS SHALL BE FRAMED USING SAME MATERIAL AND SIZE LUMBER OF SUPPORTING WALL AS NOTED IN WALL SCHEDULE UNLESS NOTED OTHERWISE IN THIS SCHEDULE.

evans + associates architecture
11576 south state street, suite 103b, draper, utah 84020
phone 801-553-8272 fax 801-553-8273

Stamp

CHRISTIAN LEE HOFHEINS 363825-2103 REGISTERED PROFESSIONAL ENGINEER STATE OF UTAH

06/01/2018

A New 8-Room Seminary for:
Herriman UT Mtn View Seminary
US Utah Salt Lake Valley South S&I Area
Autumn Crest Blvd
Herriman, Utah

Project for:
THE CHURCH OF JESUS CHRIST OF LATTER-DAY SAINTS

Revisions

Mark	Date	Description

Project Number
18-20
Plan Series
SEM18-08-1
Property Number
501341917010101
Date
June 1, 2018

Sheet Title
SCHEDULES

Sheet
S602

SCHEDULE A

CONCRETE FOOTING SCHEDULE

MARK	WIDTH	LENGTH	DEPTH	REINFORCING CROSSWISE				REINFORCING LENGTHWISE				REMARKS
				NO.	SIZE	LENGTH	SPACING	NO.	SIZE	LENGTH	SPACING	
F1	1'–8"	CONT.	1'–0"	–	–	–	–	2	#4	CONT.	14" O.C.	
F2	2'–0"	CONT.	1'–0"	–	–	–	–	3	#4	CONT.	EQUAL	
F3	5'–6"	8'–0"	1'–0"	8	#5	5'–0"	EQUAL	6	#5	7'–6"	EQUAL	

NOTES:

1. PLACE ALL REINFORCING IN THE BOTTOM OF THE FOOTING WITH 3" CLEAR CONCRETE COVER (UNLESS NOTED OTHERWISE). USE ADOBE BLOCKS.
2. TOP REINFORCING, WHERE SPECIFIED, SHALL BE PLACED IN THE TOP OF THE FOOTING WITH 2" MINIMUM CONCRETE COVER.
3. IF FOOTINGS ARE EARTH–FORMED, FOOTING WIDTH AND LENGTH SHALL BE 6" LONGER AND WIDER THAN SCHEDULED. SEE FIGURE BELOW.
4. SOME SCHEDULED FOOTINGS MAY NOT BE USED. SEE FOOTING AND FOUNDATION PLAN FOR FOOTING MARKS.
5. RUN CONTINUOUS BARS IN CONTINUOUS FOOTINGS THRU INTERSECTED SPOT FOOTINGS. SEE FIGURE BELOW.

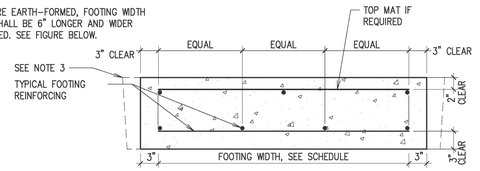

TYPICAL FOOTING SECTION

SCHEDULE B

STEEL ANGLE LINTEL SCHEDULE FOR VENEER

CLEAR OPENING	SIZE OF ANGLE
UP TO 7'–0"	3 1/2" x 3 1/2" x 1/4"
7'–1" TO 9'–0"	5" x 3 1/2" x 1/4"
9'–1" TO 10'–0"	5" x 3 1/2" x 5/16"
10'–1" TO 11'–0"	5" x 3 1/2" x 3/8"
11'–1" TO 12'–0"	6" x 4" x 3/8"
12'–1" AND OVER	REQUIRES SPECIAL ANALYSIS
NOTE:	ANGLES ARE TO BE HOT DIPPED GALVANIZED AND "PAINTED".

LINTELS CARRY BRICK OR STONE ONLY. WHERE FLOORS, ROOFS, OR CONCENTRATED LOADS OCCUR, FURTHER ANALYSIS IS NECESSARY. PROVIDE 1" OF BEARING EACH END FOR EACH FOOT OF SPAN. MINIMUM BEARING OF 6" EACH SIDE OF OPENING.

SCHEDULE C

CONCRETE FOUNDATION WALL SCHEDULE

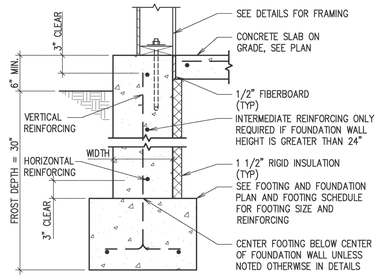

MARK	WIDTH	HORIZONTAL REINF.			VERTICAL REINF.	
		TOP	INTERMEDIATE	BOTTOM	SIZE	SPACING
CW–8	8"	(1) #4	#4 AT 12" O.C.	(1) #4	#4	16" O.C.
CW–10	10"	(1) #4	#4 AT 12" O.C.	(1) #4	#4	16" O.C.
CW–16	16"	(2) #4	(2) #4 AT 12" O.C.	(2) #4	#4	16"O.C. EF

SCHEDULE D

FRAMING NAILING REQUIREMENTS

CONNECTION AND LOCATION	NAILING	CONNECTION AND LOCATION	NAILING
TOP PLATE TO STUD (END NAIL)	2– 16d BOX (3½"x0.135") 3– 3"x0.131" NAILS	DOUBLE STUDS (FACE NAIL)	16d (3½"x0.135") AT 24" O.C. 3"x0.131" NAILS AT 8" O.C.
STUD TO SOLE (SILL) PLATE (TOENAIL)	4– 8d BOX (2½"x0.113") 4– 3"x0.131" NAILS	DOUBLE TOP PLATES (TYPICAL FACE NAIL)	16d (3½"x0.135") AT 16" O.C. 3"x0.131" NAILS AT 12" O.C.
(END NAIL)	2– 16d BOX (3½"x0.135") 3– 3"x0.131" NAILS	DOUBLE TOP PLATES (LAP SPLICE) STAGGER LAPS 8' MIN.	8– 16d BOX (3½"x0.135") 12– 3"x0.131" NAILS
BUILT UP GIRDERS AND BEAMS (FACE NAIL AT TOP AND BOTTOM STAGGERED ON OPPOSITE SIDES)	20d BOX (4"x0.148") AT 32" O.C. 3– x0.131" NAILS AT 24" O.C.	BLOCKING BETWEEN JOISTS OR RAFTERS TO TOP PLATE (TOENAIL)	3– 8d BOX (2½"x0.113") 3– 3"x0.131" NAILS
(FACE NAIL AT ENDS AND AT EACH SPLIT	2– 20d BOX (4"x0.148") 3– 3"x0.131" NAILS	RIM TO TOP PLATE (TOENAIL)	8d (2½"x0.113") AT 6" O.C. 3"x0.131" NAILS AT 6" O.C.
BUILT–UP CORNER STUDS	16d (3½"x0.135") AT 24" O.C. 3"x0.131" NAILS AT 16" O.C.	TOP PLATES, LAPS AND INTERSECTIONS (FACE NAIL)	2– 16d BOX (3½"x0.135") 3– 3"x0.131" NAILS
CONTINUOUS HEADER TO STUD (TOENAIL)	4– 8d BOX (2½"x0.113")	CONTINUOUS HEADER, TWO PIECES (16" O.C. ALONG EDGE)	16d BOX (3½"x0.135")
		CEILING JOISTS TO PLATE (TOENAIL)	3– 8d BOX (2½"x0.113") 3– 3"x0.131" NAILS

ALL FASTENERS, INCLUDING NAILS IN PRESERVATIVE TREATED WOOD, SHALL BE HOT DIPPED ZINC COATED GALVANIZED STEEL, STAINLESS STEEL, SILICONE BRONZE, OR COPPER UNLESS SILL PLATE IS BORATE TREATED OR IS OF LSL MATERIAL.

SCHEDULE F

REQUIRED NAIL TYPES

NOTE:

1. USE SCHEDULE D/S603 WHERE NOT DETAILED OTHERWISE IN DRAWINGS
2. ALL NAILS NOTED ON THE DRAWINGS SHALL BE AS SHOWN BELOW UNLESS NOTED OTHERWISE; NAILS FOR 3RD PARTY HARDWARE SHALL BE AS REQUIRED BY MANUFACTURER OF HARDWARE
3. ALL FASTENERS, INCLUDING NAILS IN PRESERVATIVE TREATED WOOD, SHALL BE HOT DIPPED ZINC COATED GALVANIZED STEEL, STAINLESS STEEL, SILICON BRONZE, OR COPPER UNLESS SILL PLATE IS BORATE TREATED OR IS OF LSL MATERIAL.

ALL NAILS NOTED ON THE DRAWINGS SHALL BE AS SHOWN BELOW, UNLESS NOTED OTHERWISE.

NAIL SIZE	TYPE	STANDARD LENGTH (INCHES)	DIAMETER (INCHES)	PENETRATION REQUIRED (INCHES)
8d	COMMON	2 1/2	.131	1 3/8
10d	COMMON	3	.148	1 1/2
16d	BOX	3 1/2	.135	1 1/2

OTHER FASTENERS MAY BE USED TO REPLACE ABOVE NAILS BUT THEY MUST HAVE EQUIVALENT, OR LARGER, DIAMETERS AND PENETRATION LENGTHS.

SCHEDULE G

CONCRETE PROTECTION FOR REINFORCEMENT

APPLICATION		MIN. CLEAR COVER
CONCRETE CAST AGAINST AND PERMANENTLY EXPOSED TO EARTH	1. ALL APPLICATIONS EXCEPT SLABS ON GRADE	3"
	2. SLABS ON GRADE – CLEAR DISTANCE FROM TOP OF SLAB	1"
CONCRETE EXPOSED TO EARTH OR WEATHER	1. #6 BARS AND LARGER	2"
	2. #5 BARS AND SMALLER	1 1/2"
NOTES	1. TOLERANCE FOR CONCRETE COVER AND REINFORCEMENT LOCATION IS ±3/8"	

SCHEDULE H

TYPICAL BLOCKING SCHEDULE

DOOR STOPS	JANITOR SHELVING
VISUAL DISPLAYS	CAN LIGHTS AT ENTRIES
MARKER BOARDS	JANITOR TAP AND HOSE HARDWARE
TACK BOARDS	MIRRORS
BABY CHANGING STATIONS	COUNTERS
EXIT SIGNS	COUNTER BRACKETS
CHAIR RAIL	ACCESS PANELS
CABINETS	HANDRAILS
TOILET PARTITIONS	FIRE CABINETS
HANDICAP BARS	STAIR BLOCKING
BATHROOM ACCESSORIES	DRINKING FOUNTAINS
TOWEL DISPENSORS	WALL HUNG SINKS
TOILET PAPER HOLDERS	
NAPKIN HOLDERS	
SHELVES	

evans + associates architecture
11576 south state street, suite 103b, draper, utah 84020
phone 801-553-8272 fax 801-553-8273

Stamp

08/01/2018

A New 8-Room Seminary for:

Herriman UT Mtn View Seminary
US Utah Salt Lake Valley South S&I Area

Autumn Crest Blvd
Herriman, Utah

Project for:

THE CHURCH OF JESUS CHRIST OF LATTER-DAY SAINTS

Revisions		
Mark	Date	Description

Project Number
18-20

Plan Series
SEM18-08-1

Property Number
501341917010101

Date
June 1, 2018

Sheet Title
SCHEDULES

Sheet
S603

SCHEDULE A

HOLD–DOWN (ANCHOR) SCHEDULE

MARK	SIMPSON HOLD–DOWN MODEL NO.	WOOD COLUMN/STUDS AT HOLD–DOWN (MINIMUM)	ANCHOR BOLT DIAMETER	EMBEDMENT DEPTH
A–1	HDU2	2	5/8" DIA	0'–8"
A–2	HDU4	2	5/8" DIA	0'–10"

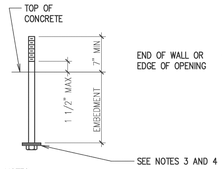

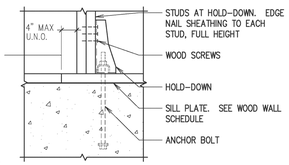

NOTES:

1. SIMPSON 'SSTB16' OR 'SSTB20' BOLTS MAY BE SUBSTITUTED FOR 5/8" DIA ANCHOR BOLTS IN THE ABOVE SCHEDULE (OR EQUAL).
2. SIMPSON 7/8" DIA 'SSTB28' OR 'SSTB34' BOLTS MAY BE SUBSTUTUTED FOR 7/8" DIA ANCHOR BOLTS IN THE ABOVE SCHEDULE (OR EQUAL).
3. ANCHOR BOLTS MAY BE HEADED BOLTS OR ALL–THREADED RODS WITH DOUBLE NUTS EMBEDDED IN CONCRETE. USE ASTM A307 OR A36.
4. USE (2)– 2" x 2" x 3/16" PLATE WASHERS (NOT REQUIRED WITH A DOUBLE NUT SYSTEM).
5. COMPARE THIS SCHEDULE TO SCHEDULES B/S602 AND C/S602 USE THE GREATER NUMBER OF STUDS REQUIRED.
6. CONTRACTOR HAS THE OPTION TO USE EPOXY BOLTS INSTEAD OF CAST IN PLACE BOLTS. EPOXY BOLTS SHALL BE INSTALLED AS DEEP AS CAST IN PLACE BOLTS. THE EPOXY SHALL BE 'HIT RE 500–SD' BY HILTI CORPORATION, PR POWERS PW1000+' BY POWERS FASTENERS INC. OR 'SET–XP' BY SIMPSON STRONG–TIE. ALL EPOXY BOLTS SHALL BE SPECIALY INSPECTED
7. ALL FASTENERS, INCLUDING NAILS IN PRESERVATIVE TREATED WOOD, SHALL BE HOT DIPPED ZINC COATED GALVANIZED STEEL, STAINLESS STEEL, SILICON BRONZE, OR COPPER UNLESS SILL PLATE IS BORATE TREATED OR IS OF LSL MATERIAL.
8. ALL WOOD COLUMNS TO BE NAILED OR BOLTED TOGETHER PER THE FIGURES IN B/S602 PRIOR TO HOLD–DOWN INSTALLATION.
9. INSTALL ALL SDS SCREWS PERPENDICULAR TO FACE OF STUD. DO NOT INSTALL AT ANGLE

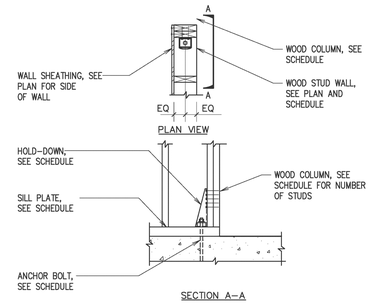

A INTERIOR SHEARWALL END
NO SCALE

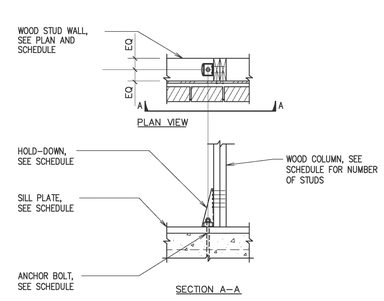

B EXTERIOR CONTINUOUS FOOTING
NO SCALE

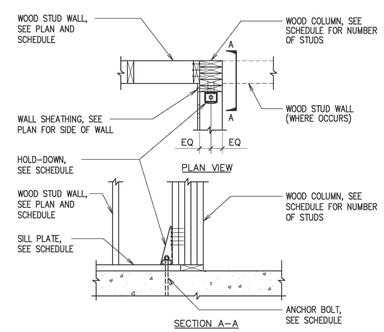

C INTERIOR CORNER
NO SCALE

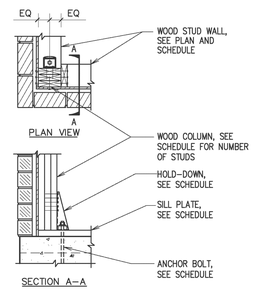

D EXTERIOR CORNER
NO SCALE

evans + associates architecture
11576 south state street, suite 103b, draper, utah 84020
phone 801-553-8272 fax 801-553-8273

Stamp

06/01/2018

A New 8-Room Seminary for:

Herriman UT Mtn View Seminary
US Utah Salt Lake Valley South S&I Area

Autumn Crest Blvd
Herriman, Utah

Project for:

THE CHURCH OF JESUS CHRIST OF LATTER-DAY SAINTS

Revisions		
Mark	Date	Description

Project Number
18-20

Plan Series
SEM18-08-1

Property Number
501341917010101

Date
June 1, 2018

Sheet Title
SCHEDULES

Sheet
S604

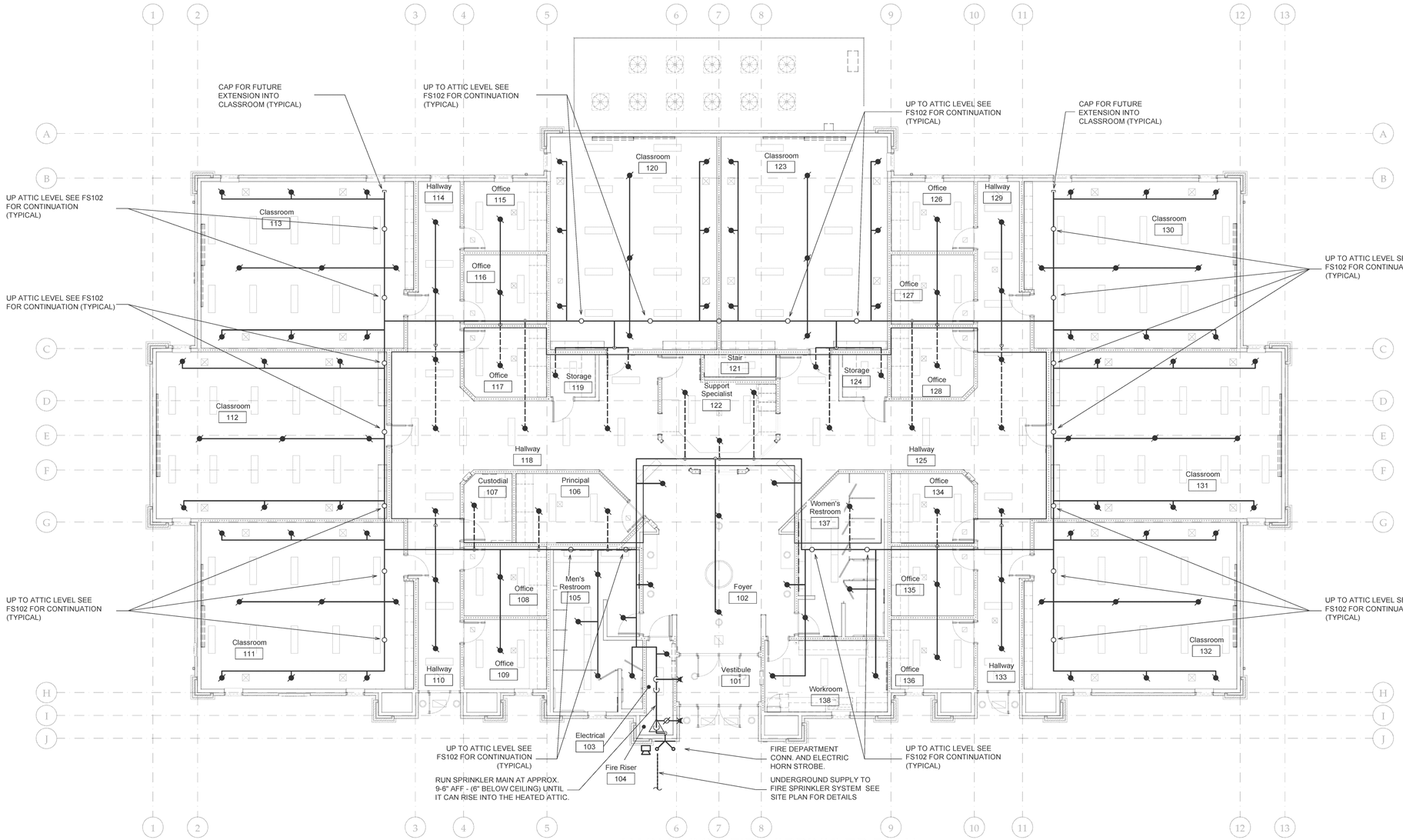

1 MAIN FLOOR FIRE SPRINKLER PLAN

1/8" = 1'-0"

GENERAL NOTES

1. INSTALL FIRE PROTECTION PIPING AS SHOWN, WET-PIPE SYSTEM THROUGHOUT ALL AREAS OF THE BUILDING.
2. USE DRY-BARREL TYPE SPRINKLERS IN CANOPIES AND VESTIBULES WHEN SUPPLIED FROM WET SYSTEM.
3. OBTAIN APPROVAL FOR PIPING CHANGES FROM ARCHITECT AND ENGINEER.
4. RUN PIPING LEVEL OR SLOPED TO DRAIN AS DESIGNATED IN NFPA 13.
5. THE FIRE SPRINKLER SYSTEM SHALL BE DESIGNED PER THE REQUIREMENTS OF NFPA 13
   A) ORDINARY HAZARD GP 1 FOR MECHANICAL, ELECTRICAL, AND JANITOR AREAS.
   B) LIGHT HAZARD FOR THE REMAINDER OF THE MAIN LEVEL AND THE ATTIC.
6. SPRINKLER HEAD SPACING:
   A) LIGHT HAZARD AREAS: 225 SQ. FT.
   B) ORDINARY HAZARD AREAS: 130 SQ. FT.
   C) ATTIC AREAS: 120 SQ. FT. PER HEAD.
7. SEE SITE PLAN FOR UTILITY CONNECTION AND LOCATION OF FIRE HYDRANTS.
8. DO NOT ROUTE PIPING THRU STRUCTURAL MEMBERS OR MECHANICAL DUCT WORK EXCEPT AS SHOWN ON THE DRAWINGS.
9. SEE REFLECTED CEILING PLAN FOR EXACT LOCATION OF SPRINKLER HEADS. SPRINKLER HEADS ARE NOT REQUIRED TO BE CENTERED IN THE ONE FOOT ACOUSTICAL TILES.
10. COORDINATE WITH FRAMER FOR SHEAR-WALL PENETRATIONS.
11. ALL SPRINKLERS SHALL BE QUICK-RESPONSE TYPE.
12. ALL WET-PIPE SYSTEM COMPONENTS (EXCEPT DRY BARREL SPRINKLERS) SHALL BE INSTALLED INSIDE THE BUILDING INSULATION ENVELOPE.
13. ALL REQUIRED DRAINS SHALL FOLLOW NFPA 13 REQUIREMENTS. DRAIN VALVES SHALL BE LOCATED TO PREVENT PUBLIC ACCESS AND SHALL BE PIPED TO DISCHARGE OUTSIDE THE BUILDING.
14. FIRE SPRINKLERS SHALL NOT BE REQUIRED UNDER CANOPIES AND STAIRS UNLESS REQUIRED BY THE FIRE MARSHAL.
15. THE SPRINKLER PIPING LOCATED IN THE EQUIPMENT PLATFORM LEVEL THAT SUPPLIES SPRINKLER HEADS LOCATED IN THE MAIN LEVEL SHALL BE INSTALLED WITHIN THE FLOOR FRAMING. PIPING SHALL NOT BE INSTALLED ON THE FLOOR SURFACE. PIPING WITHIN FLOOR FRAMING IS SHOWN DASHED. SEE DETAIL 2/FS301, 3/FS301, AND DETAIL N/FS501.
16. USE ONLY PENDENT SPRINKLERS UNDER INSULATION AND AIR BARRIER IN ATTIC. ATTIC SIDE DISCHARGE SPRINKLERS ARE EXEMPT FROM THIS RULE.

FIRE SPRINKLER LEGEND

⌀	UPRIGHT HEAD ON LINE		PRESSURE GAUGE
⌀	CONCEALED PENDENT HEAD	LT	LOW TEMPERATURE SENSOR PROVIDED BY DIVISION 28
⌀	PENDENT HEAD ON LINE	TS	VALVE TAMPER SWITCH
⌀	CONCEALED DRY PENDENT HEAD	FS	FLOW SWITCH
	SIDE DICHARGE ATTIC HEAD		FLEXIBLE COUPLING
	DRY SIDEWALL HEAD RECESSED		SWAY BRACING
	DRY SIDEWALL HEAD		ANGLE VALVE
	SIDEWALL HEAD RECESSED		PIPE SUPPORT
	SIDEWALL HEAD		SPRINKLER PIPING
IT	INSPECTOR'S TEST VALVE		FIRE DEP. CONNECTION
	BALL VALVE 2" & SMALLER BUTTERFLY VALVE 2 1/2" & LARGER		PIPE IN FLOOR STRUCTURE
	PIPE UP / PIPE DOWN		

HEAD COUNT

SPRINKLERS	K-FACTOR	ORIFICE	FINISH	TYPE	CANOPY	DEGREE	QUANTITY
⌀	5.6	1/2"	WHITE	WET PENDENT	N/A	212	
⌀	5.6	1/2"	BRONZE	UPRIGHT	N/A	212	
⌀	5.6	1/2"	BRONZE	PENDENT	CONCEALED	155	
⌀	5.6	1/2"	WHITE	DRY PENDENT	CONCEALED	155	
	5.6	1/2"	BRONZE	ATTIC SIDEWALL	N/A	212	
	5.6	1/2"	WHITE	DRY SIDEWALL	RECESSED	155	
E				(E=EXTENDED COVERAGE)			
	5.6	1/2"	WHITE	WET SIDEWALL	RECESSED	155	
	5.6	1/2"	BRONZE	WET SIDEWALL	N/A	212	
	5.6	1/2"	BRONZE	DRY SIDEWALL	N/A	212	

evans + associates architecture
11576 south state street, suite 103b, draper, utah 84020
phone 801-553-9272
fax 801-553-9273

Stamp

REGISTERED PROFESSIONAL ENGINEER
No. 158501
ROBERT D. FAZZIO
6/1/2018
STATE OF UTAH

A New 8-Room Seminary for:

Herriman UT Mtn View Seminary
US Utah Salt Lake Valley South S&I Area

Autumn Crest Blvd
Herriman, Utah

Project for:
THE CHURCH OF JESUS CHRIST OF LATTER-DAY SAINTS

Revisions

Mark	Date	Description

Project Number 18-20
Plan Series SEM18-08-1
Property Number 501341917010101
Date June 1, 2018

Sheet Title
MAIN LEVEL FIRE SPRINKLER PIPING PLAN

Sheet
FS101

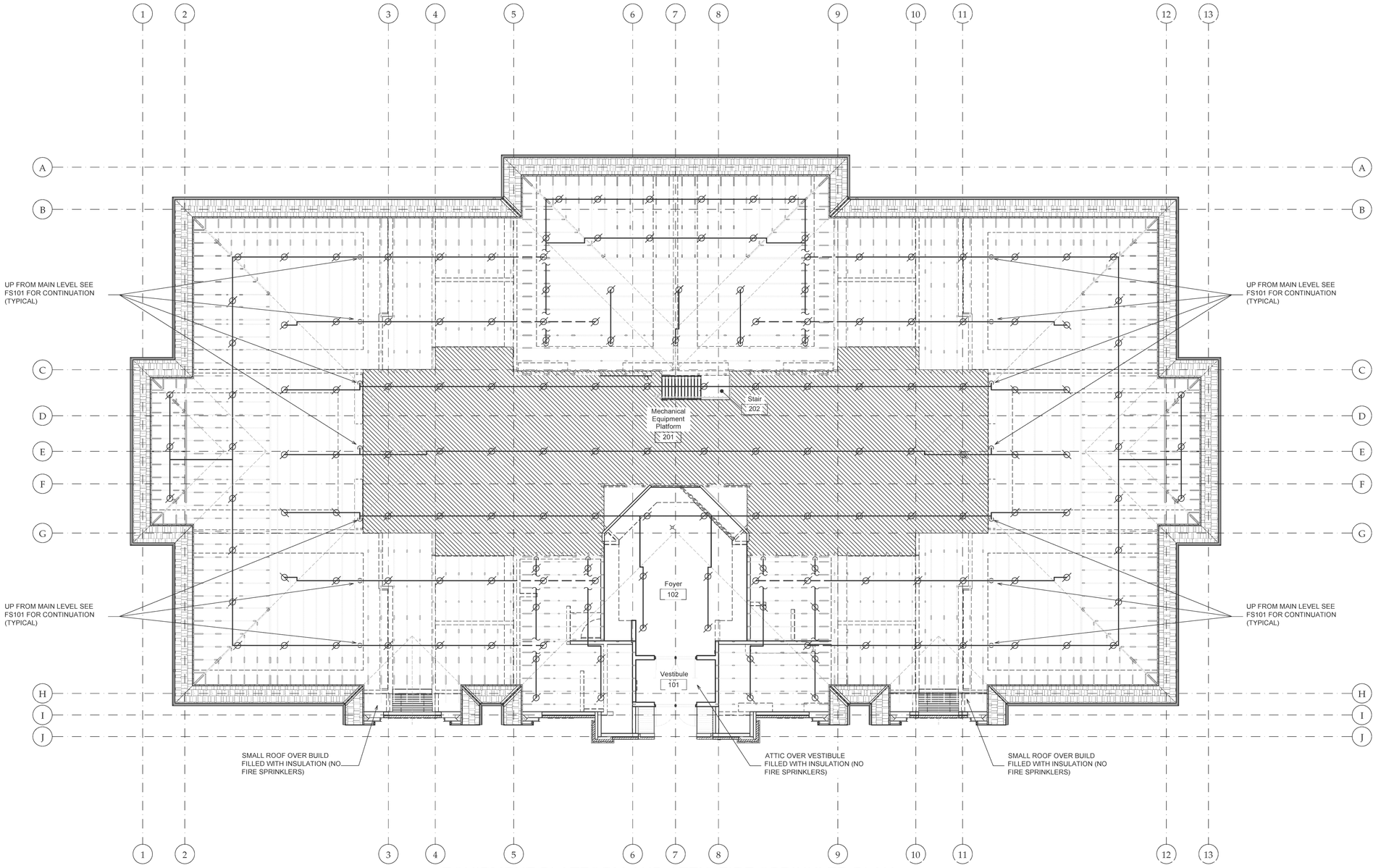

1 EQUIPMENT PLATFORM AND ATTIC FIRE SPRINKLER PLAN

1/8" = 1'-0"

FIRE SPRINKLER LEGEND

⌀	UPRIGHT HEAD ON LINE		PRESSURE GAUGE
	CONCEALED PENDENT HEAD	LT	LOW TEMPERATURE SENSOR PROVIDED BY DIVISION 28
	PENDENT HEAD ON LINE	TS	VALVE TAMPER SWITCH
	CONCEALED DRY PENDENT HEAD	FS	FLOW SWITCH
	SIDE DICHARGE ATTIC HEAD		FLEXIBLE COUPLING
	DRY SIDEWALL HEAD RECESSED		SWAY BRACING
	DRY SIDEWALL HEAD		ANGLE VALVE
	SIDEWALL HEAD RECESSED		PIPE SUPPORT
	SIDEWALL HEAD		SPRINKLER PIPING
IT	INSPECTOR'S TEST VALVE		FIRE DEP. CONNECTION
	BALL VALVE 2" & SMALLER BUTTERFLY VALVE 2 1/2" & LARGER		PIPE IN FLOOR STRUCTURE
	PIPE UP		PIPE DOWN

HEAD COUNT

SPRINKLERS	K-FACTOR	ORIFICE	FINISH	TYPE	CANOPY	DEGREE	QUANTITY
	5.6	1/2"	WHITE	WET PENDENT	N/A	212	
⌀	5.6	1/2"	BRONZE	UPRIGHT	N/A	212	
	5.6	1/2"	BRONZE	PENDENT	CONCEALED	155	
	5.6	1/2"	WHITE	DRY PENDENT	CONCEALED	155	
	5.6	1/2"	BRONZE	ATTIC SIDEWALL	N/A	212	
	5.6	1/2"	WHITE	DRY SIDEWALL	RECESSED	155	
E				(E=EXTENDED COVERAGE)			
	5.6	1/2"	WHITE	WET SIDEWALL	RECESSED	155	
	5.6	1/2"	BRONZE	WET SIDEWALL	N/A	212	
	5.6	1/2"	BRONZE	DRY SIDEWALL	N/A	212	

evans + associates architecture
11576 south state street, suite 100b, draper, utah 84020
phone 801-553-9072 fax 801-553-9073

Stamp

REGISTERED PROFESSIONAL ENGINEER
No. 158501
ROBERT D. FAZZIO
6/1/2018
STATE OF UTAH

A New 8-Room Seminary for:

Herriman UT Mtn View Seminary
US Utah Salt Lake Valley South S&I Area

Autumn Crest Blvd
Herriman, Utah

Project for:
THE CHURCH OF JESUS CHRIST OF LATTER-DAY SAINTS

Revisions

Mark	Date	Description

Project Number
18-20

Plan Series
SEM18-08-1

Property Number
501341917010101

Date
June 1, 2018

Sheet Title
EQUIPMENT PLATFORM AND ATTIC FIRE SPRINKLER PLAN

Sheet
FS102