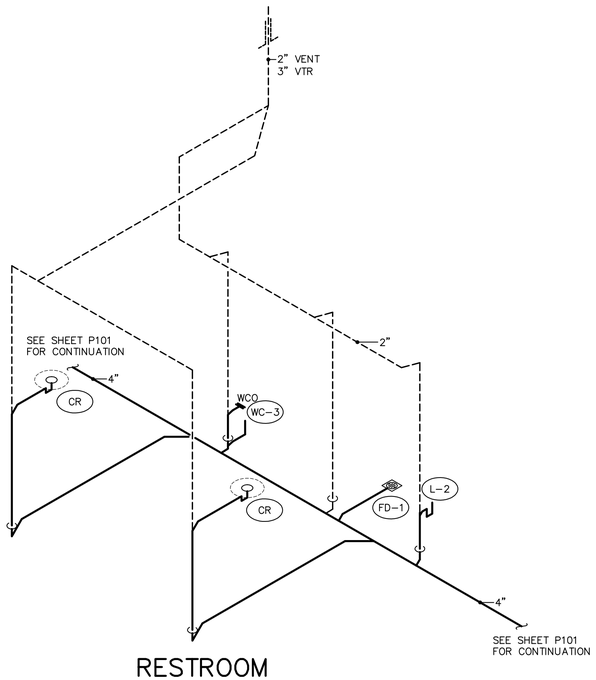

RESTROOM
3 104 WASTE AND VENT
NOT TO SCALE

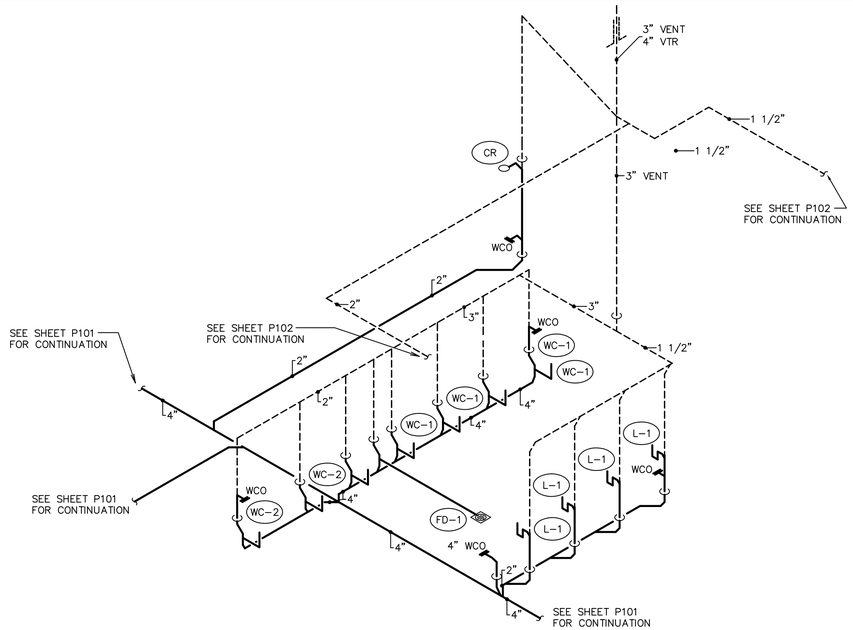

1 WOMENS RESTROOM 176 WASTE AND VENT
NOT TO SCALE

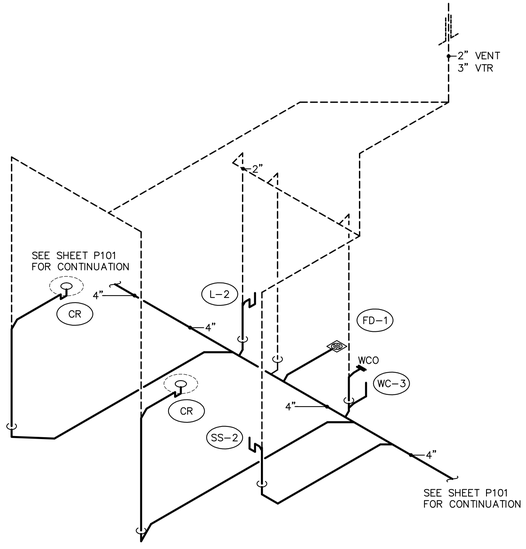

RESTROOM 155/
4 SACRAMENT PREP. 154 WASTE AND VENT
NOT TO SCALE

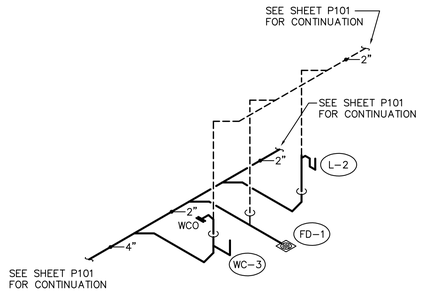

RESTROOM
5 144 WASTE AND VENT
NOT TO SCALE

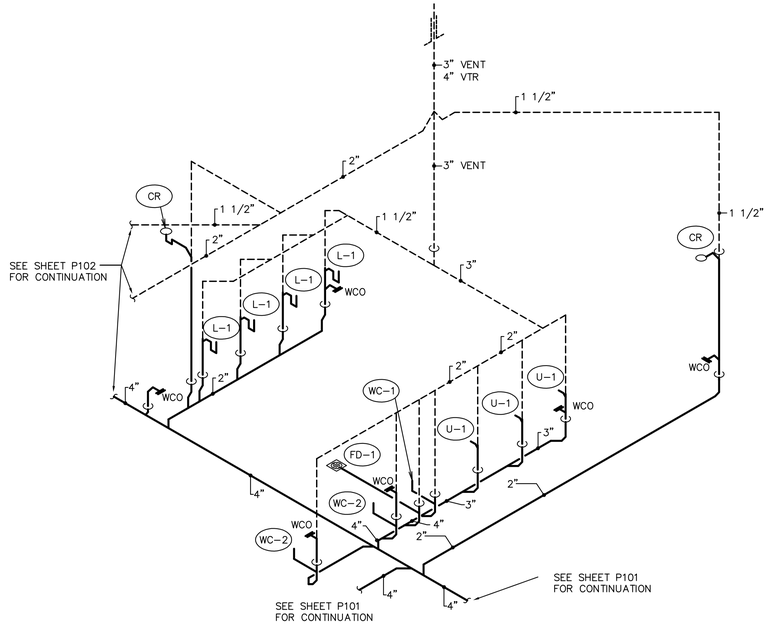

2 MEN'S RESTROOM 172 WASTE AND VENT
NOT TO SCALE

Architect / Engineer:
BOTT PANTONE ARCHITECTS
630 24TH STREET
OGDEN, UT 84401
ARCHITECTS.NET
P 801 394 3033
F 801 394 0064

Stamp:
Registered Professional Engineer
NO. 3572
LELAND P. DAVIS
10/30/18
State of Utah

NIBLEY 12 &
MENDON UTAH
STAKE CENTER
APPROX. 1585 W. 3200 S.
NIBLEY, UTAH

Project for:
THE CHURCH OF
JESUS CHRIST
OF LATTER-DAY SAINTS

Mark	Date (D-M-Y)	Description
30-OCT-18		BID SET

Project Number:
1770
Plan Series:
HET-SDS-09-07
Property Number:
5002240-17-010201

Sheet Title:
PLUMBING
WASTE AND
VENT
SCHEMATICS

Sheet:
P902

F:\1project\18019 Nibley 12 Wards\Drawings\HET-SDS-09-07\HET-SDS-09-07\hstk\HET-SDS-09\HSDS-P902.dwg, 10/21/2018 9:43:47 PM

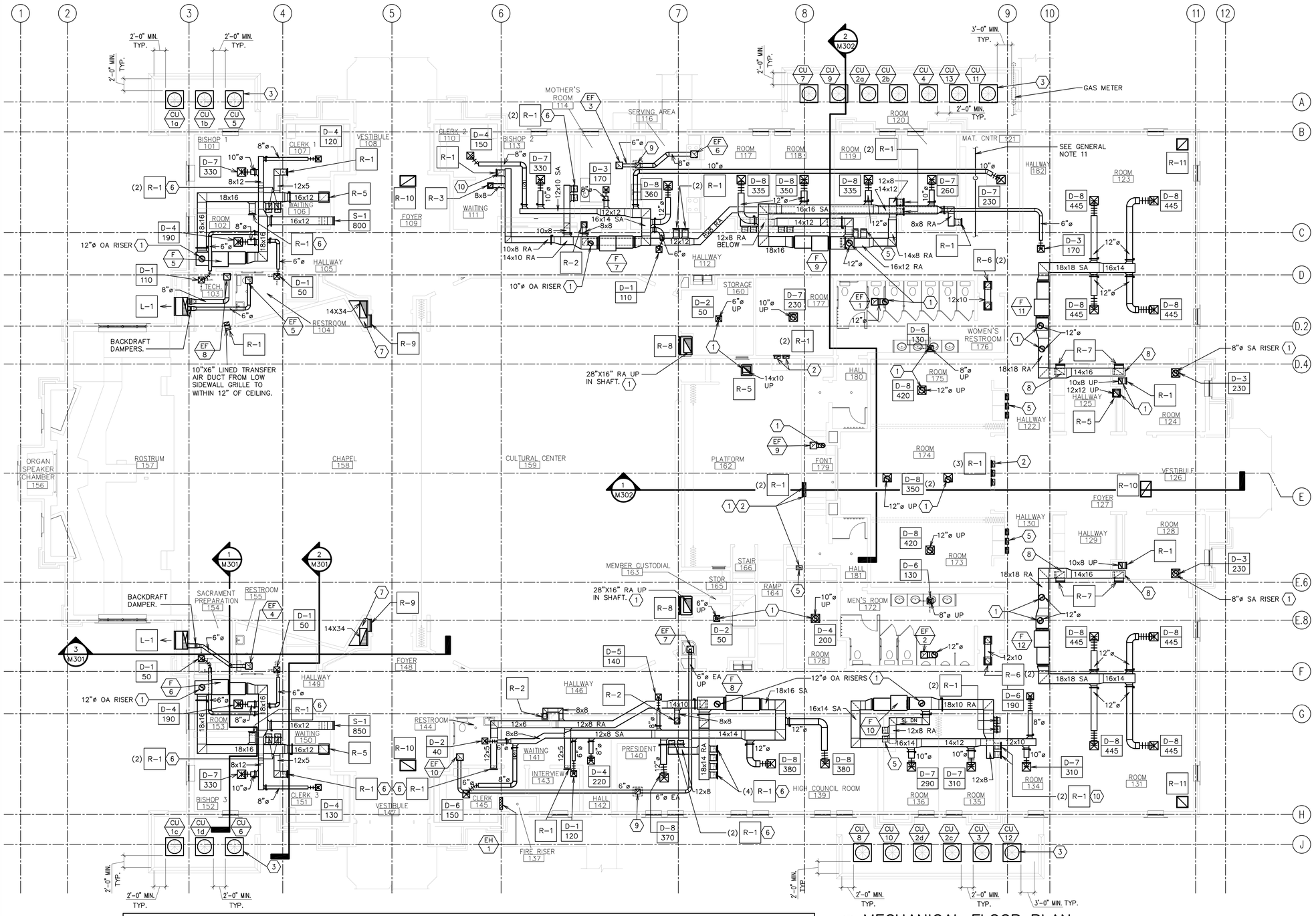

GENERAL NOTES

1. DRAWINGS SHOW GENERAL ARRANGEMENT OF PIPING, DUCTWORK, EQUIPMENT, ETC. FOLLOW AS CLOSELY AS ACTUAL BUILDING CONSTRUCTION AND WORK OF OTHER TRADES WILL PERMIT. BECAUSE OF THE SMALL SCALE OF THE DRAWINGS, IT IS NOT POSSIBLE TO INDICATE ALL OFFSETS, FITTINGS, AND ACCESSORIES THAT MAY BE REQUIRED. INVESTIGATE STRUCTURAL AND FINISH CONDITIONS AFFECTING THIS WORK AND ARRANGE WORK ACCORDINGLY. PROVIDE SUCH FITTINGS, VALVES, AND ACCESSORIES REQUIRED TO MEET CONDITIONS.
2. ALL DUCT DIMENSIONS SHOWN ARE CLEAR DIMENSIONS INSIDE DUCT LINER.
3. DO NOT USE LINER INSIDE RETURN AIR DUCT RISERS IN 2"X6" WALLS OF PERIMETER ROOMS.
4. WRAP ALL OUTSIDE AIR DUCTS WITH EXTERNAL INSULATION.
5. SEE ARCHITECTURAL REFLECTED CEILING PLAN FOR EXACT LOCATION OF GRILLES AND DIFFUSERS.
6. ALL PVC EQUIPMENT VENTS, PLUMBING VENTS, AND PENTHOUSE EXHAUST VENTS SHALL BE PAINTED TO MATCH ROOF COLOR.
7. MOUNT ALL DUCT SMOKE DETECTORS IN RETURN AIR STREAM ONLY. DO NOT MOUNT DOWNSTREAM OF MINIMUM OUTSIDE AIR CONNECTION.
8. DO NOT ROUTE PIPES ABOVE ELECTRICAL PANELS. MAINTAIN CLEAR ACCESS SPACE IN FRONT OF ALL ELECTRICAL PANELS 4'-0" DEEP AND 6'-6" HIGH.
9. SEE SHEET M102 FOR CONTINUATION OF ALL DUCT RISERS.
10. 12"x5" RETURN DUCT DROPS IN WALLS OF ROOMS 117, 118, 119, 173, 175 AND 178 TERMINATE IN BOTTOM OF CABINETS. SEE ARCHITECTURAL DETAILS V/A407.
11. COORDINATE WITH NATURAL GAS PIPING MAIN. SEE SHEET P102.

KEYED NOTES

1. SEE SHEET M102 FOR CONTINUATION. TYPICAL.
2. 12x5 UNLINED RETURN AIR DUCTS IN WALL. SEE SHEET M102 FOR CONTINUATION.
3. COMPRESSOR UNIT. REFER TO SHEET M501 FOR REFRIGERANT PIPING SCHEME AND DETAILS. TYPICAL.
4. MIXED AIR PLENUM AT INLET TO FAN UNIT. FULL SIZE. TYPICAL FOR ALL SYSTEMS.
5. 12"x5" UNLINED RETURN DUCT DROPS IN WALL. TERMINATE DUCT OPENING IN CABINET BASE. REFER TO ARCHITECTURAL DETAILS V/A407. TYPICAL AT ROOMS 117, 118, 119, 136, 173, 175, AND 178.
6. LOW SIDEWALL RETURN AIR GRILLE LOCATED IN ACOUSTICAL WALL. REFER TO DETAILS P AND Q/A502 FOR CORRECT LOCATION OF RA DUCT DROP.
7. 60" TALL LINED RETURN AIR PLENUM, MINIMUM 8 SQ. FT. BASE.
8. DROP 16"X10" R.A. DUCT DOWN IN SHAFT TO SIDEWALL RETURN GRILLE.
9. CONNECT EXHAUST TO 16"X16" EXHAUST FROM PENTHOUSE ON ROOF. SEE SHEET M102 FOR CONTINUATION.
10. 12"x5" UNLINED RA DROP DOWN TO R-1 RETURN AIR GRILLE. TYPICAL.

L E G E N D

SYMBOL	DESCRIPTION	SYMBOL	DESCRIPTION	SYMBOL	DESCRIPTION
	BRANCH DUCT TAKE-OFF SEE DETAIL A/M502		BDD – (BACK DRAFT DAMPER)	SA	SUPPLY AIR
	SINGLE THICKNESS TURNING VANES		MANUAL VOLUME DAMPER	RA	RETURN AIR AND RELIEF AIR TO ERV's
	DUCT TRANSITION		FLEX. CONNECTION 6'–0" MAX LENGTH – SEE DETAIL E/M502	OA	OUTSIDE AIR
	MOTORIZED DAMPER		DUCT SMOKE DETECTOR. INSTALL 12x12 ACCESS DOOR AT ALL LOCATIONS	TA	TRANSFER AIR
				FA	FRESH AIR (ERV LABEL)
				EA	EXHAUST AIR
				AF	ABOVE FLOOR
				SL UP	SLOPE UP OR DN

1 MECHANICAL FLOOR PLAN
1/8" = 1'–0"

Architect / Engineer:
BOTT PANTONE ARCHITECTS
620 24TH STREET
OGDEN, UT 84401
EIGHT EXCHANGE PLACE, SUITE
P 801 394 3033
F 801 394 0064

Stamp:
Registered Professional Engineer
NO. 3572
LELAND P. DAVIS
10/30/18
State of Utah

NIBLEY 12 & MENDON UTAH STAKE CENTER
APPROX. 1585 W. 3200 S.
NIBLEY, UTAH

Project for:
THE CHURCH OF JESUS CHRIST OF LATTER-DAY SAINTS

Mark	Date (DAY)	Description
30-OCT-18		BID SET

Project Number: 1770
Plan Series: HET-SDS-09-07
Property Number: 5002240-17-010201

Sheet Title: MAIN FLOOR PLAN

Sheet: M101

F:\1project\18019 Nibley 12 Wards\Drawings\HET-SDS-09-07\HET-SDS-09-07\Instk\HET-SDS-09\HSDS-M101.dwg, 10/21/2018 9:17:53 PM

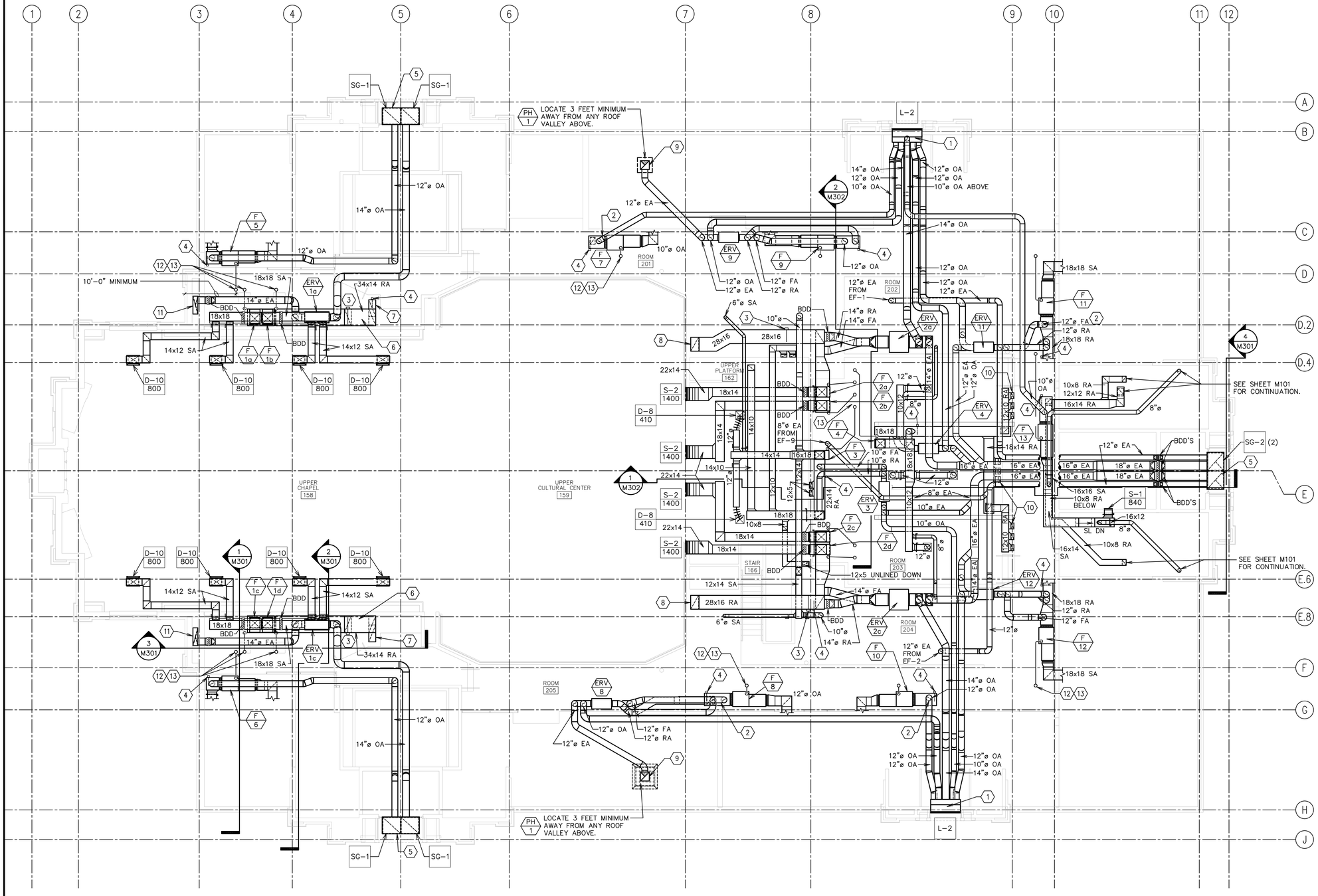

1 EQUIPMENT PLATFORM PLAN
1/8" = 1'-0"

KEYED NOTES

1. 24" DEEP OUTSIDE AIR INTAKE PLENUM. INSTALL ICE AND WATER SHIELD AT INTERIOR OF PLENUM. SLOPE BOTTOM TOWARDS EXTERIOR WALL. WRAP WITH SPECIFIED INSULATION.
2. MINIMUM OUTSIDE AIR CONTROLS. REFER TO DETAIL F/M503. TYPICAL FOR ALL SYSTEMS.
3. DUCT SMOKE DETECTOR AND 12X12 ACCESS DOOR.
4. CO2 SENSOR BY DIV 23. REFER TO SHEET ME101.
5. PROVIDE 26" WIDE x 24" HIGH PLENUM FULL LENGTH OF BOTH SOFFIT GRILLES.
6. RISE UP AND OVER AND DOWN FOR SOUND ATTENUATION.
7. DROP 34"x14" RA DUCT DOWN INTO RA PLENUM BELOW.
8. DROP 28"x16" RA DUCT DOWN IN SHAFT.
9. 16"x16" EXHAUST UP TO PENTHOUSE ON ROOF. PROVIDE BACK DRAFT DAMPER AT INSULATION ENVELOPE PENETRATION.
10. (3) 12"x5" UNLINED RA DROPS DOWN IN WALL. SEE M101 FOR CONTINUATION.
11. DROP 36"x10" EXHAUST AIR DUCT DOWN SHAFT.
12. CONCENTRIC VENT AND COMBUSTION AIR PIPING UP THROUGH ROOF. REFER TO DETAILS C/M503 AND D/M503. DO NOT BLOCK ACCESS WITH VENT PIPING. TYPICAL FOR ALL FURNACE SYSTEMS.
13. LOCATE VENTS ALIGNED ALONG BUILDING AXIS AND AWAY FROM ROOF PEAKS AND VALLEYS. REFER TO SHEET A121 FOR ROOF PENETRATION LOCATIONS.

Architect / Engineer:

BOTT PANTONE ARCHITECTS
620 24TH STREET
OGDEN, UT 84401
BP-ARCHITECTS.NET
P 801.394.3033
F 801.394.9064

Stamp:

Registered Professional Engineer
NO. 3572
LELAND P. DAVIS
10/30/18
State of Utah

NIBLEY 12 & MENDON UTAH STAKE CENTER
APPROX. 1585 W. 3200 S.
NIBLEY, UTAH

Project for:
THE CHURCH OF JESUS CHRIST OF LATTER-DAY SAINTS

Mark	Date (D-M-Y)	Description
	30-OCT-18	BID SET

Project Number: 1770
Plan Series: HET-SDS-09-07
Property Number: 5002240-17-010201

Sheet Title: EQUIPMENT PLATFORM PLAN

Sheet: M102

F:\1project\18019 Nibley 12 Wards\Drawings\HET-SDS-09-07\HET-SDS-09-07\hstk\HET-SDS-09\HSDS-M102.dwg, 10/21/2018 9:24:32 PM

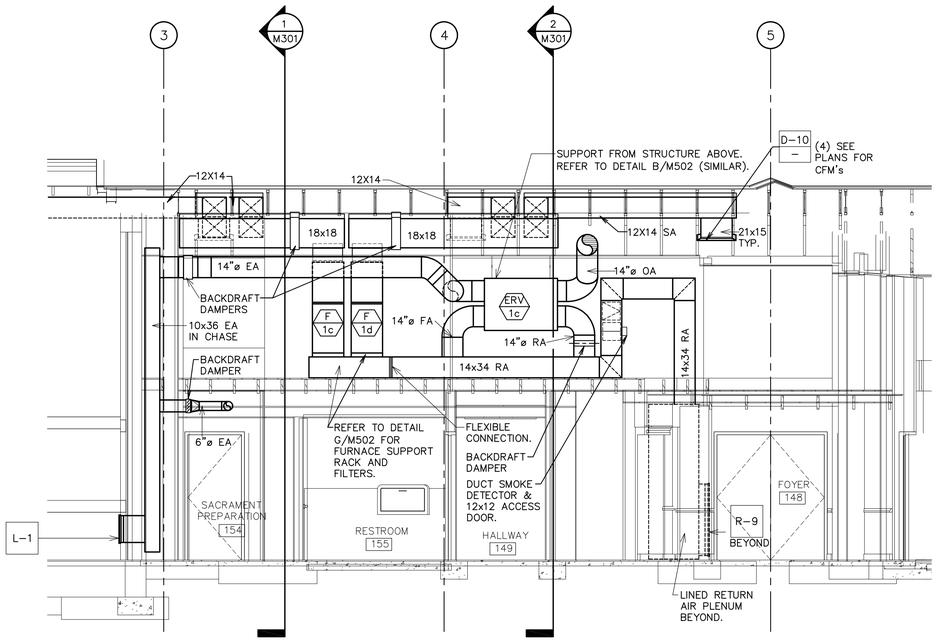

3 MECHANICAL SECTION
1/4" = 1'-0"

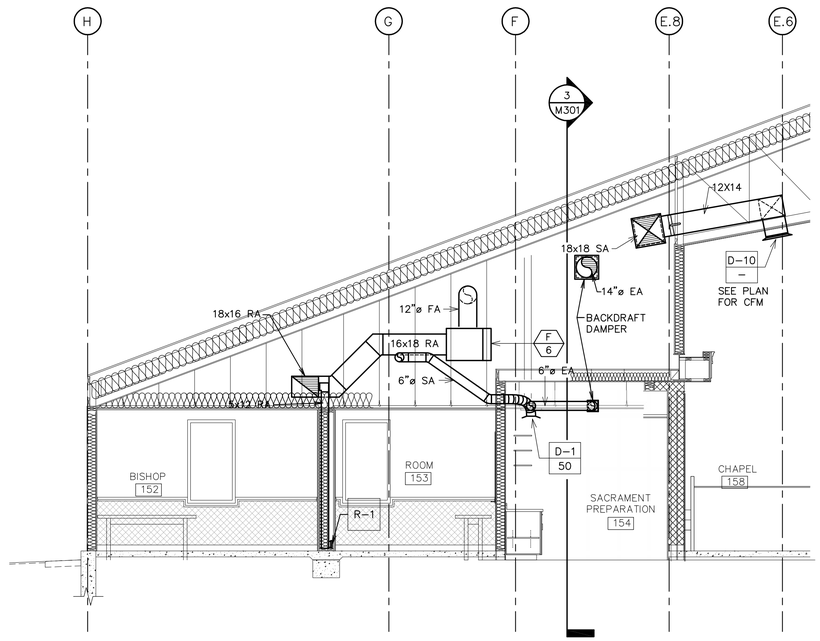

1 MECHANICAL SECTION
1/4" = 1'-0"

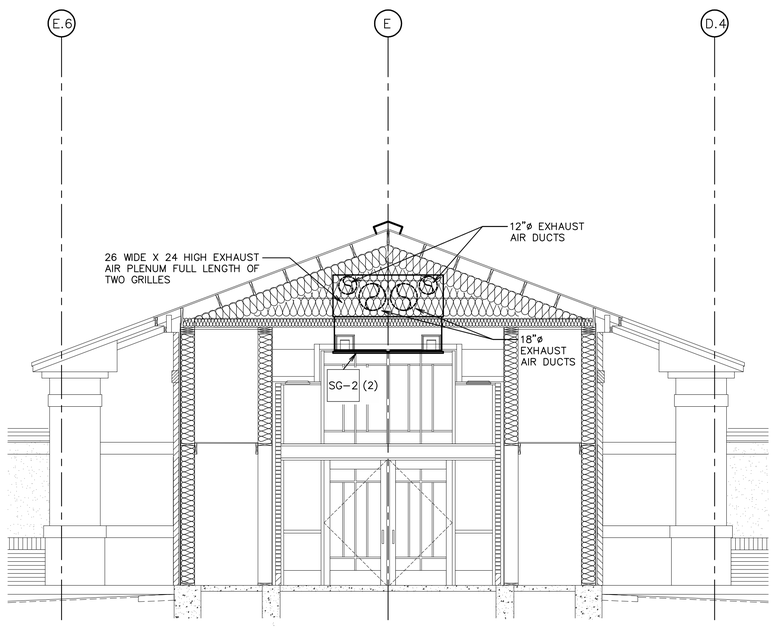

4 MECHANICAL SECTION
1/4" = 1'-0"

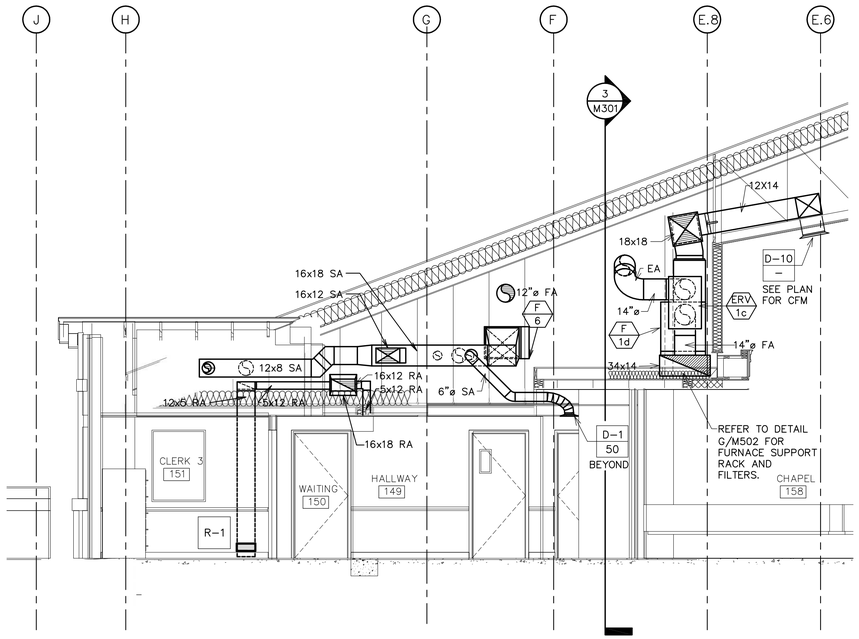

2 MECHANICAL SECTION
1/4" = 1'-0"

Architect / Engineer:

BOTT PANTONE ARCHITECTS
620 24TH STREET
OGDEN, UT 84401
BP-ARCHITECTS.NET
P 801.394.3033
F 801.394.9064

Stamp:

Registered Professional Engineer
NO. 3572
LELAND P. DAVIS
10/30/18
State of Utah

NIBLEY 12 & MENDON UTAH STAKE CENTER
APPROX. 1585 W. 3200 S.
NIBLEY, UTAH

Project for:
THE CHURCH OF JESUS CHRIST OF LATTER-DAY SAINTS

Mark	Date (D-M-Y)	Description
	30-OCT-18	BID SET

Project Number: 1770
Plan Series: HET-SDS-09-07
Property Number: 5002240-17-010201

Sheet Title: MECHANICAL SECTIONS

Sheet: M301

F:\1project\18019 Nibley 12 Wards\Drawings\HET-SDS-09-07\HET-SDS-09-07\hstk\HET-SDS-09\HSDS-M301.dwg, 10/21/2018 9:25:14 PM

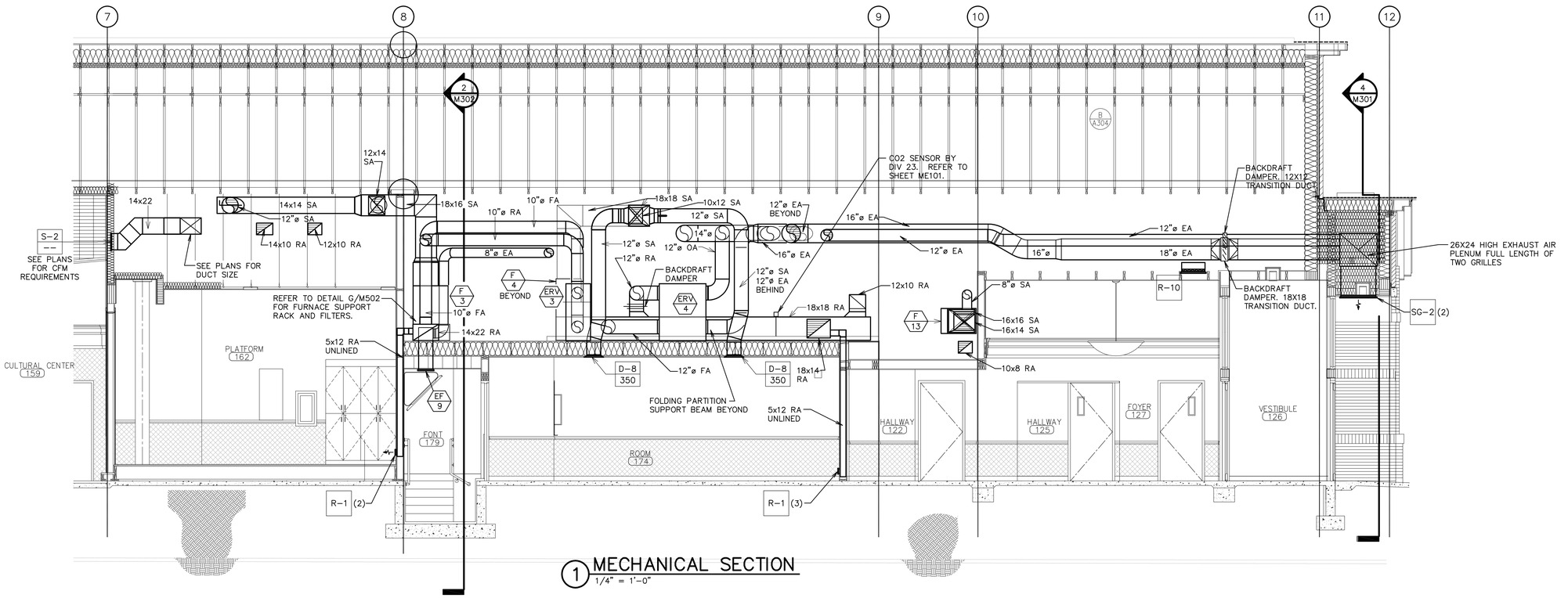

1 MECHANICAL SECTION
1/4" = 1'-0"

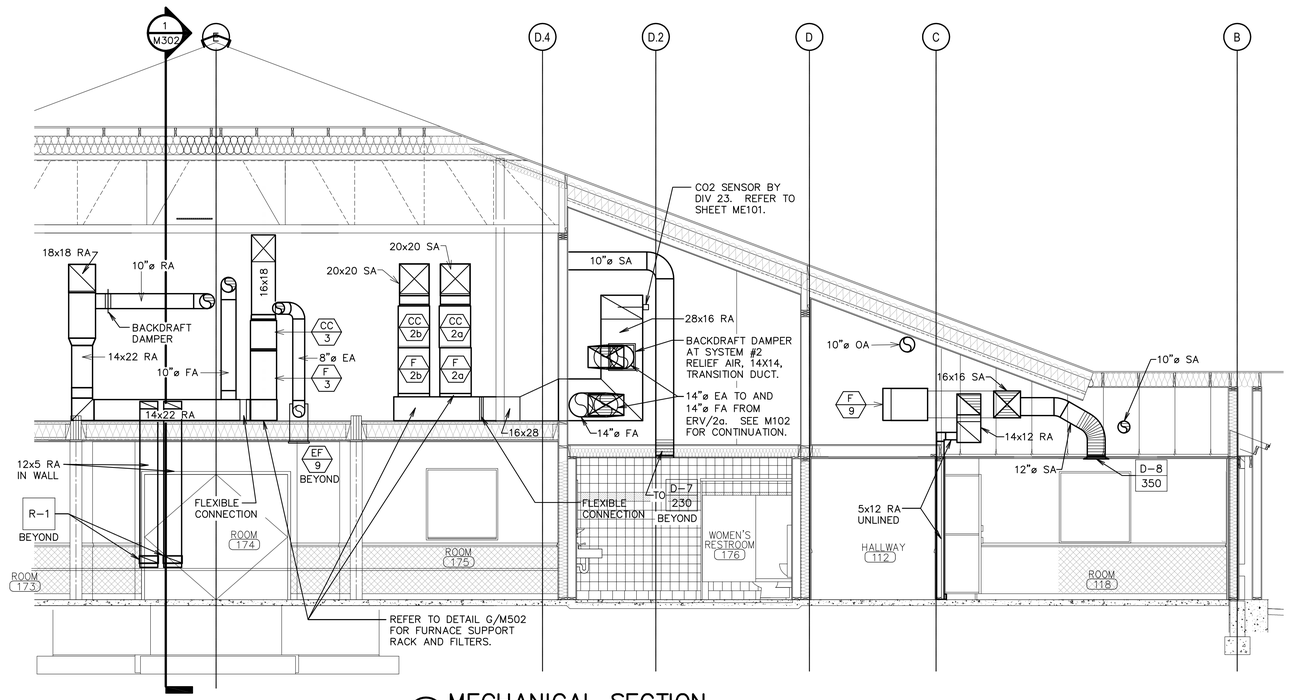

2 MECHANICAL SECTION
1/4" = 1'-0"

Architect / Engineer:

BOTT PANTONE ARCHITECTS
620 24TH STREET
OGDEN, UT 84401
BP-ARCHITECTS.NET
P 801.394.3033
F 801.394.9064

Stamp:

Registered Professional Engineer
NO. 3572
LELAND P. DAVIS
10/30/18
State of Utah

NIBLEY 12 & MENDON UTAH STAKE CENTER

APPROX. 1585 W. 3200 S.
NIBLEY, UTAH

Project for:

THE CHURCH OF JESUS CHRIST OF LATTER-DAY SAINTS

Mark	Date (D-M-Y)	Description
	30-OCT-18	BID SET

Project Number: 1770
Plan Series: HET-SDS-09-07
Property Number: 5002240-17-010201

Sheet Title: MECHANICAL SECTIONS

Sheet: M302

F:\1project\18019 Nibley 12 Wards\Drawings\HET-SDS-09-07\HET-SDS-09-07\hstk\HET-SDS-09\HSDS-M302.dwg, 10/21/2018 9:26:11 PM

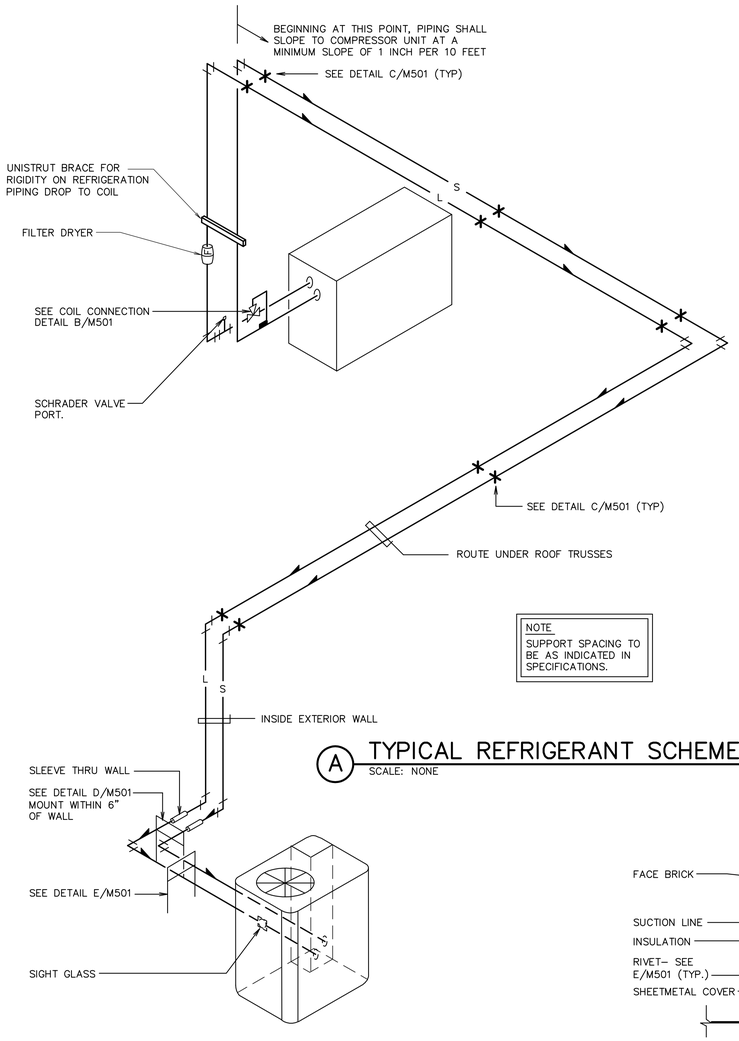

A TYPICAL REFRIGERANT SCHEME
SCALE: NONE

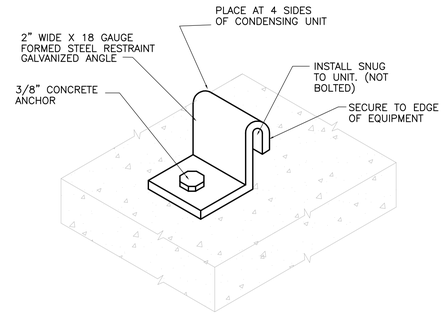

F CONDENSING UNIT SEISMIC RESTRAINT
SCALE: NONE

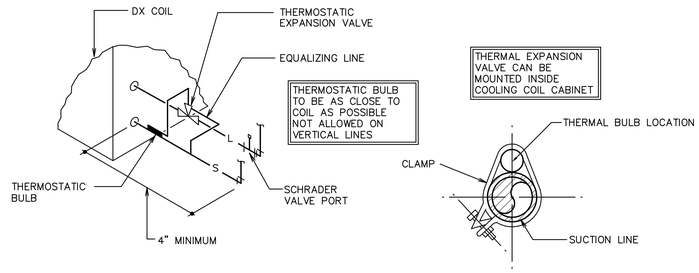

B REFRIGERANT COIL CONNECTION DETAIL
SCALE: NONE

REFRIGERANT PIPING LEGEND

SYMBOL	DESCRIPTION
	EXPANSION VALVE. SEE DETAIL B/M501
	MOISTURE INDICATING SIGHT GLASS
	FLEXIBLE CONNECTION
F	FILTER DRIER
	PIPE SUPPORT. SEE DETAIL C/M501
	EXTERIOR PIPE SUPPORT. SEE DETAILS D/M501 AND E/M501
	DIRECTION OF SLOPE DOWN
S	SUCTION LINE
L	LIQUID LINE
	SCHRADER VALVE PORT

REFRIGERANT LINE SIZES

SYSTEM SIZE	LIQUID	SUCTION
2.0 TON	3/8"	3/4"
2.5 TON	3/8"	3/4"
3.0 TON	3/8"	7/8"
3.5 TON	3/8"	7/8"
4.0 TON	3/8"	7/8"
5.0 TON	3/8"	1 1/8"

* REFER TO COMPRESSOR UNIT SCHEDULE FOR SYSTEM SIZES. REFER TO SHEET M601.

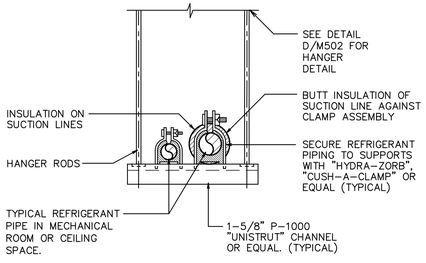

C SUSPENDED REFRIGERANT PIPE SUPPORT AT CEILING
SCALE: NONE

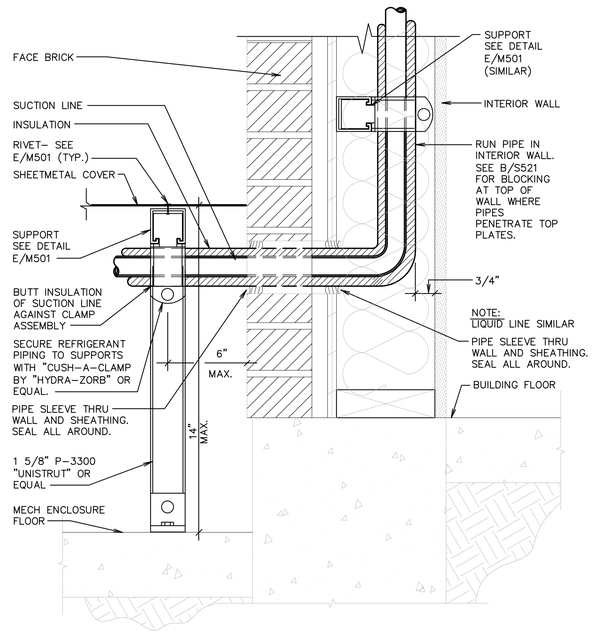

D REFRIGERANT PIPE SUPPORT AT WALL
SCALE: NONE

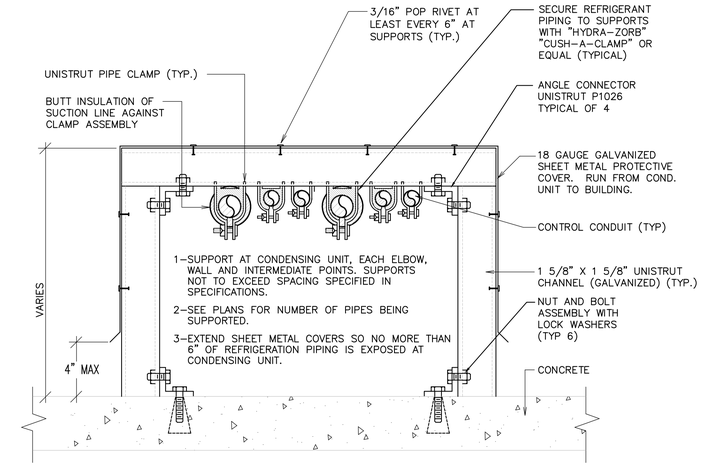

E EXTERIOR REFRIGERANT PIPE SUPPORT DETAIL
SCALE: NONE

Architect / Engineer:
BOTT PANTONE ARCHITECTS
630 24TH STREET
OGDEN, UT 84401
(BEHIND THE TEMPLE)
P 801 394 3033
F 801 394 0064

Stamp:
Registered Professional Engineer
LELAND P. DAVIS
NO. 3572
10/30/18
State of Utah

NIBLEY 12 & MENDON UTAH STAKE CENTER
APPROX. 1585 W. 3200 S.
NIBLEY, UTAH

Project for:
THE CHURCH OF JESUS CHRIST OF LATTER-DAY SAINTS

Mark	Date (M/D/Y)	Description
30-OCT-18		BID SET

Project Number: 1770
Plan Series: HET-SDS-09-07
Property Number: 5002240-17-010201

Sheet Title: MECHANICAL DETAILS

Sheet: M501

F:\1project\18019 Nibley 12 Wards\Drawings\HET-SDS-09-07\HET-SDS-09-07\hstk\HET-SDS-09\HSDS-M501.dwg, 10/21/2018 9:26:56 PM

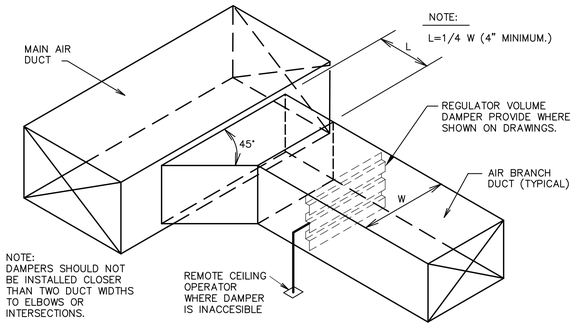

A SUPPLY OR RETURN AIR DUCT BRANCH CONNECTION DETAIL

SCALE: NONE

DIMENSION OF LONGEST SIDE, INCHES	SHEET METAL GAGE (ALL FOUR SIDES)	TRANSVERSE REINFORCING (1)					
		MINIMUM REINFORCING ANGLE SIZE AND MAXIMUM LONGITUDINAL SPACING BETWEEN TRANSVERSE JOINTS &/OR INTERMEDIATE REINFORCING	AT JOINTS				
			MIN. H, IN.	DRIVE SLIP / PLAIN S SLIP	HEMMED S SLIP	ALTER'NT BAR SLIP	REIN-FORCED BAR SLIP
				RECOM-MENDED GAGE	RECOM-MENDED GAGE	RECOM-MENDED GAGE	RECOM-MENDED GAGE
UP THRU 12	26	NONE REQUIRED	1	26	26	24	24
13 – 18	24	NONE REQUIRED	1	24	24	24	24
19 – 30	24	1"X1"X1/8" @ 60 IN	1	–	24	24	24
31 – 36	22	1"X1"X1/8" @ 60 IN	1	–	–	22	22

(1) TRANSVERSE REINFORCING SIZE IS DETERMINED BY DIMENSION OF SIDE TO WHICH ANGLE IS APPLIED.

(2) LONGITUDINAL JOINTS TO BE PITTSBURG OR SNAP LOCK TYPE.

B DUCT CONSTRUCTION DETAIL

SCALE: NONE

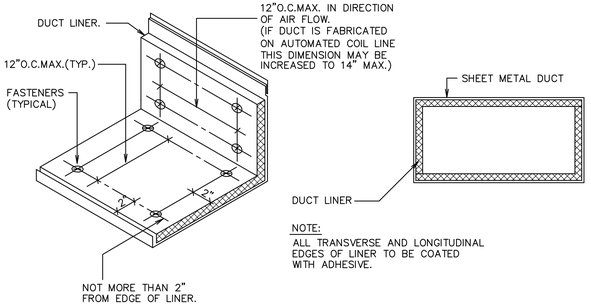

C DUCT LINER DETAIL

SCALE: NONE

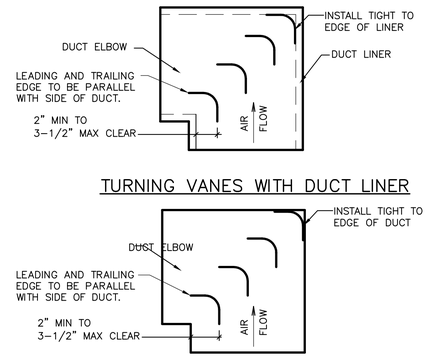

K TURNING VANE DETAIL

SCALE: NONE

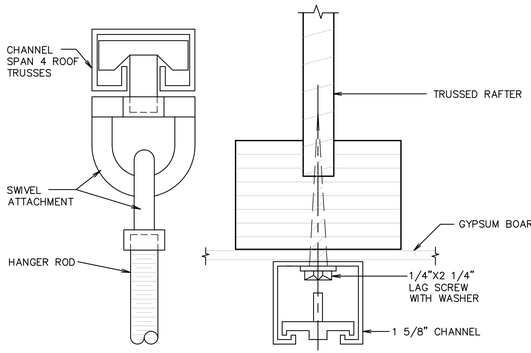

D UPPER ATTACHMENT DETAIL

SCALE: NONE

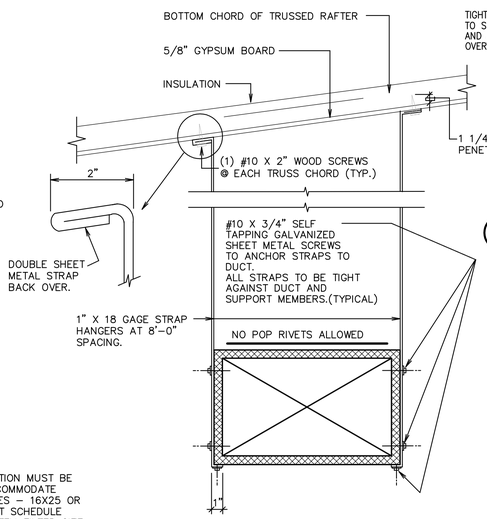

E DUCT STRAP HANGER DETAIL

SCALE: NONE

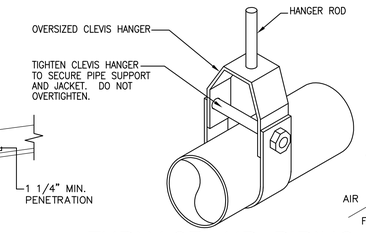

L FURNACE AIR PIPING SUPPORT DETAIL

SCALE: NONE

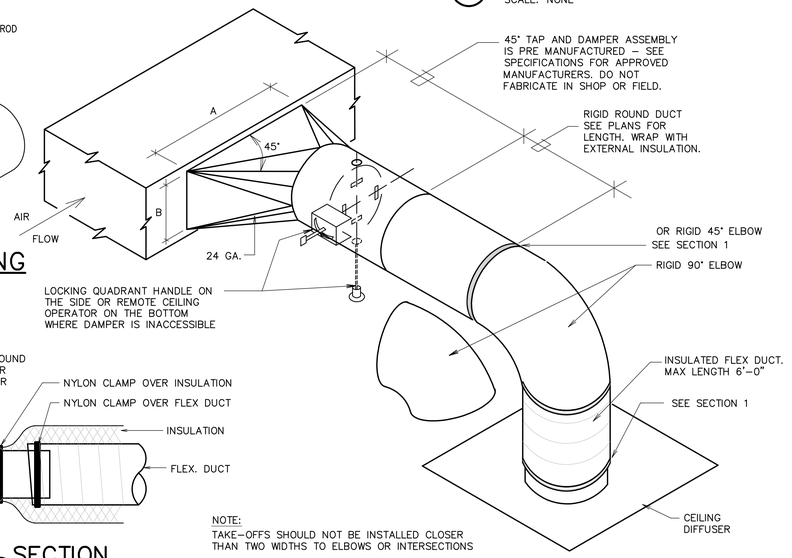

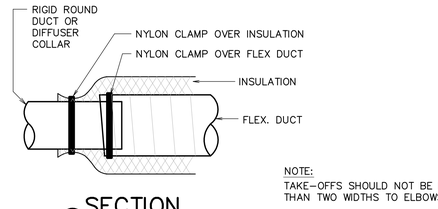

1 SECTION

NOTE:
TAKE–OFFS SHOULD NOT BE INSTALLED CLOSER THAN TWO WIDTHS TO ELBOWS OR INTERSECTIONS

NOTE:
AREA OF A X B SHALL BE EQUAL TO 1.5 X AREA BRANCH DUCT

F SQUARE TO ROUND TAKE–OFF DETAIL

SCALE: NONE

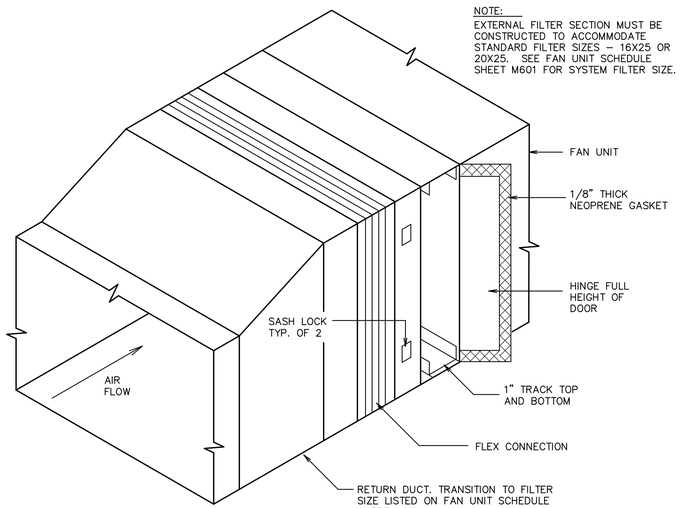

G EXTERNAL FILTER SECTION DETAIL

SCALE: NONE

DO NOT BLOCK FILTER ACCESS WITH CONDUIT, THREADED ROD, OR CONDENSATE DRAINS,

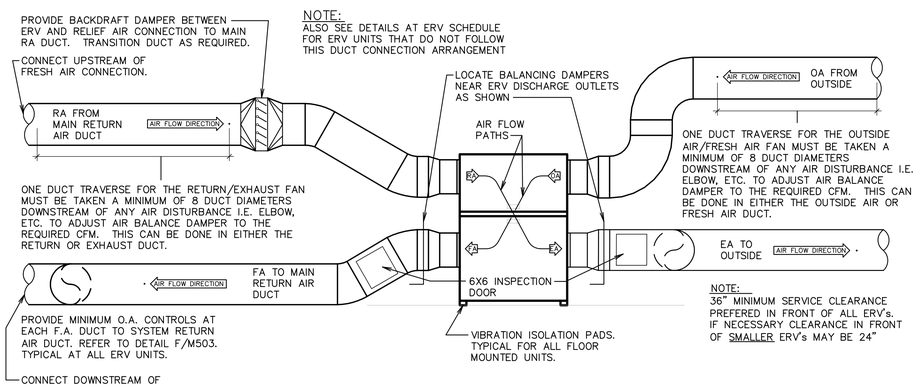

H TYPICAL ERV DAMPERING DETAIL

SCALE: NONE

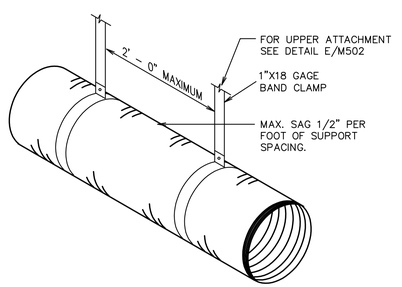

J FLEXIBLE DUCT SUPPORT DETAIL

SCALE: NONE

Architect / Engineer:
BOTT PANTONE ARCHITECTS
620 24TH STREET
OGDEN, UT 84401
(801) 394-3053 TEL
P 801 394 3033
F 801 394 0064

Stamp:

Registered Professional Engineer
NO. 3572
LELAND P. DAVIS
10/30/18
State of Utah

NIBLEY 12 & MENDON UTAH STAKE CENTER

APPROX. 1585 W. 3200 S.
NIBLEY, UTAH

Project for:
THE CHURCH OF JESUS CHRIST OF LATTER-DAY SAINTS

Mark	Date (DAMY)	Description
	30-OCT-18	BID SET

Project Number: 1770
Plan Series: HET-SDS-09-07
Property Number: 5002240-17-010201

Sheet Title: MECHANICAL DETAILS

Sheet: M502

F:\1project\18019 Nibley 12 Wards\Drawings\HET-SDS-09-07\HET-SDS-09-07\Instk\HET-SDS-09\HSDS-M502.dwg, 10/21/2018 9:27:42 PM

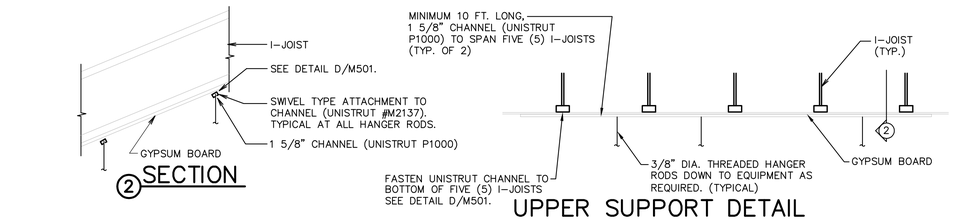

A UPPER SUPPORT DETAIL FOR I-JOIST LOCATIONS

SCALE: NONE

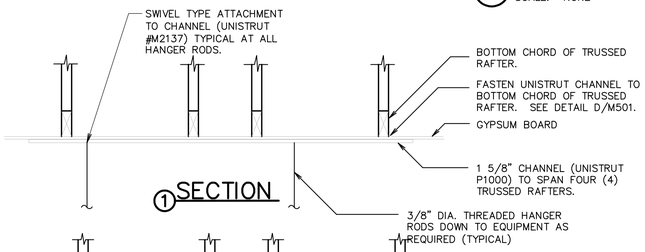

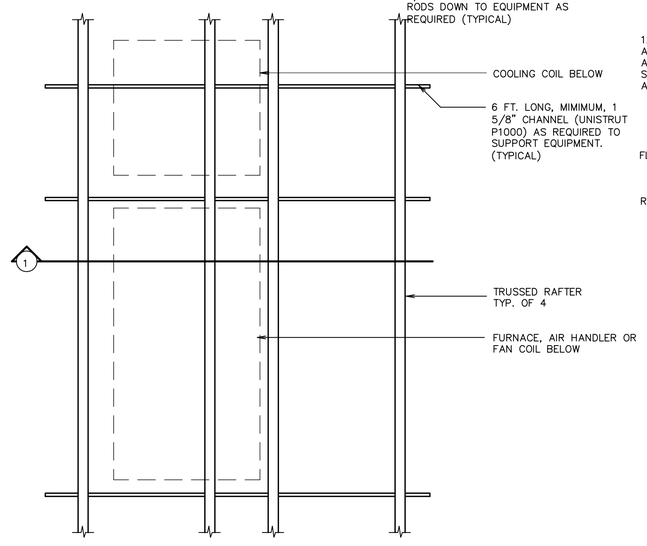

B UPPER SUPPORT DETAIL FOR TRUSSED RAFTERS

SCALE: NONE

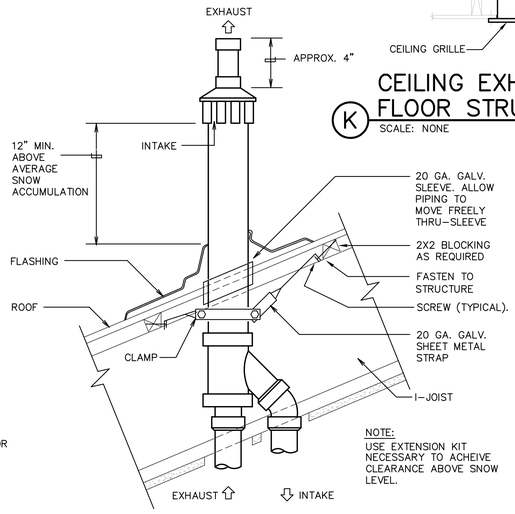

C CONCENTRIC ROOF TERMINATION DETAIL

SCALE: NONE

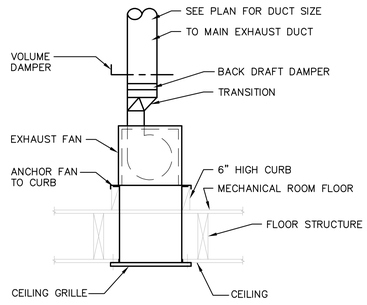

K CEILING EXHAUST FAN IN FLOOR STRUCTURE DETAIL

SCALE: NONE

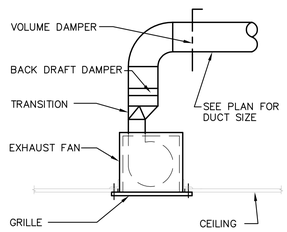

L CEILING EXHAUST FAN IN CEILING STRUCTURE DETAIL

SCALE: NONE

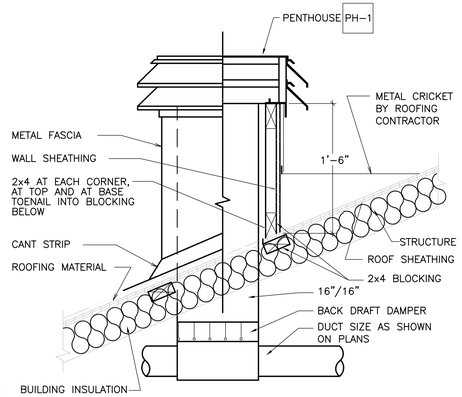

J LOUVERED PENTHOUSE DETAIL

SCALE: NONE

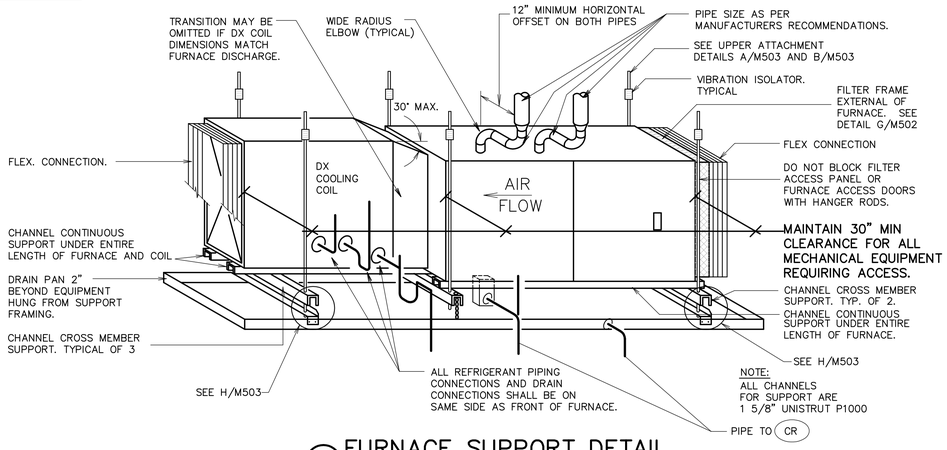

D FURNACE SUPPORT DETAIL

SCALE: NONE

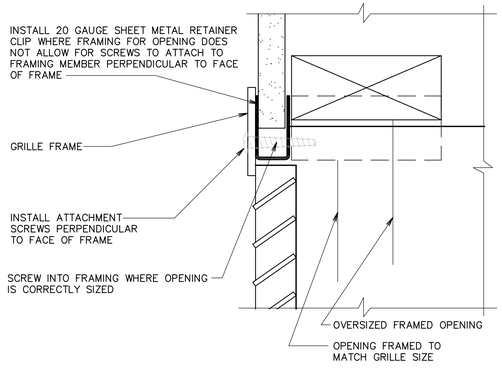

E GRILLE ATTACHMENT DETAIL

SCALE: NONE

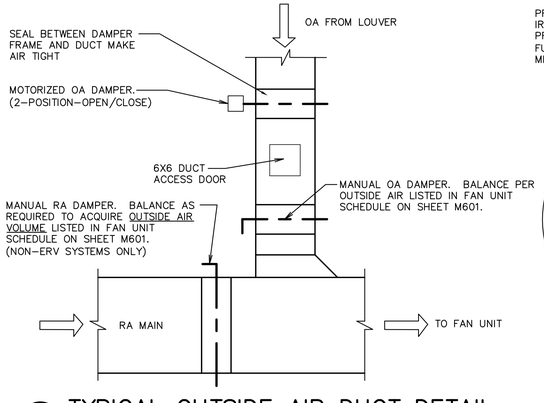

F TYPICAL OUTSIDE AIR DUCT DETAIL

SCALE: NONE

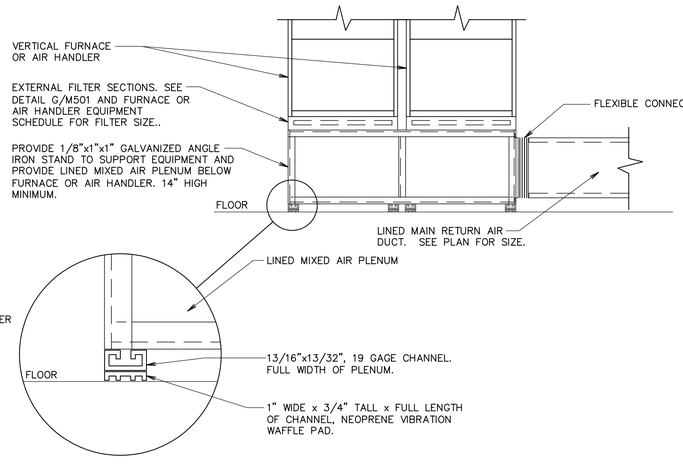

G VERTICAL FURNACE OR AIR HANDLER SUPPORT DETAIL

SCALE: NONE (F-1 AND F-2) (F-3 AND F-4 SIMILAR)

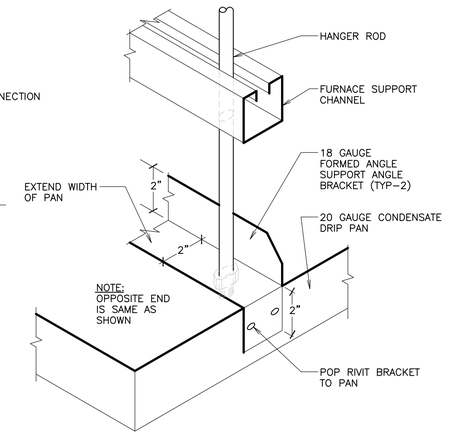

H CONDENSATE DRIP PAN SUPPORT DETAIL

SCALE: NONE

Architect / Engineer:
BOTT PANTONE ARCHITECTS
630 24TH STREET
OGDEN, UT 84401
ESTABLISHED 1983
P 801 394 3033
F 801 394 0064

Stamp:

Registered Professional Engineer
NO. 3572
LELAND P. DAVIS
10/30/18
State of Utah

NIBLEY 12 & MENDON UTAH STAKE CENTER
APPROX. 1585 W. 3200 S.
NIBLEY, UTAH

Project for:
THE CHURCH OF JESUS CHRIST OF LATTER-DAY SAINTS

Mark	Date (DMMY)	Description
		30-OCT-18 BID SET

Project Number: 1770
Plan Series: HET-SDS-09-07
Property Number: 5002240-17-010201

Sheet Title: MECHANICAL DETAILS

Sheet: M503

F:\1project\18019 Nibley 12 Wards\Drawings\HET-SDS-09-07\HET-SDS-09-07\hstk\HET-SDS-09\HSDS-M503.dwg, 10/21/2018 9:28:24 PM

FAN UNIT SCHEDULE (GAS FIRED FURNACE) (2)

MARK	MINIMUM (1) REQ'D OUTPUT BTU/HR	MINIMUM A.C.F.M.	MINIMUM O.A.	EXT. S.P. IN.W.G.	STANDARD FILTER SIZE (8)	MOTOR (5) MINIMUM H.P.	MOTOR (5) SPEED (7)	REMARKS (9)
F 1a	75,000	1600	840	0.50	1X20X25	1/2	HIGH (6)	--
F 1b	75,000	1600		0.50	1X20X25	1/2	HIGH (6)	--
F 1c	75,000	1600	840	0.50	1X20X25	1/2	HIGH (6)	--
F 1d	75,000	1600		0.50	1X20X25	1/2	HIGH (6)	--
F 2a	58,000	1400	1085	0.50	1X20X25	1/2	HIGH (6)	--
F 2b	58,000	1400		0.50	1X20X25	1/2	HIGH (6)	--
F 2c	58,000	1400	1085	0.50	1X20X25	1/2	HIGH (6)	--
F 2d	58,000	1400		0.50	1X20X25	1/2	HIGH (6)	--
F 3	58,00/38,000 (3)	1350	490	0.60	1X20X25	3/4	(4)	--
F 4	78,000/51,000 (3)	1800	690	0.50	1X20X25	3/4	(4)	--
F 5	75,000	1600	250	0.60	1X20X25	1/2	HIGH (6)	--
F 6	75,000	1600	250	0.60	1X20X25	1/2	HIGH (6)	--
F 7	41,000	1350	270	0.60	1X16X25	1/3	HIGH (6)	--
F 8	78,000/51,000 (3)	1800	560	0.50	1X20X25	3/4	(4)	--
F 9	58,00/38,000 (3)	1450	500	0.50	1X20X25	3/4	(4)	--
F 10	41,000	1100	280	0.60	1X16X25	1/3	HIGH (6)	--
F 11	77,000/50,000 (3)	1780	730	0.50	1X20X25	3/4	(4)	--
F 12	77,000/50,000 (3)	1780	730	0.50	1X20X25	3/4	(4)	--
F 13	41,000	1300	230	0.60	1X16X25	1/3	HIGH (6)	--

(1) SEA LEVEL RATING
(2) FAN UNIT MARKS CORRESPOND WITH COMPRESSOR UNIT AND DX COIL MARKS.
(3) TWO STAGE HEAT FURNACE. HIGH/LOW
(4) VARIABLE SPEED ECM MOTOR.
(5) ELECTRICAL CHARACTERISTICS – MOTOR: 115V/1PHASE/60HZ
(6) 4-SPEED, DIRECT DRIVE PSC MOTOR.
(7) SET FAN MOTOR SPEED TAP TO LOWEST POSSIBLE SETTING REQUIRED TO ACHIEVE DESIGN AIR FLOW.
(8) SEE DETAIL G/M501
(9) SEE SPECIFICATION FOR APPROVED MANUFACTURERS

COMPRESSOR UNIT SCHEDULE (COOLING ONLY) (1)(3)(4)

MARK	MIN. (2) NOMINAL SIZE (TONS)	COMPRESSOR RATED LOAD AMPS	FAN FULL LOAD AMPS	MIN. CIRCUIT AMPS	MOCP	REMARKS (5)
CU 1a	4.0	24.2	1.7	31.9	50	-- (6)
CU 1b	4.0	24.2	1.7	31.9	50	-- (6)
CU 1c	4.0	24.2	1.7	31.9	50	-- (6)
CU 1d	4.0	24.2	1.7	31.9	50	-- (6)
CU 2a	3.5	21.2	1.5	28.1	45	-- (6)
CU 2b	3.5	21.2	1.5	28.1	45	-- (6)
CU 2c	3.5	21.2	1.5	28.1	45	-- (6)
CU 2d	3.5	21.2	1.5	28.1	45	-- (6)
CU 3	3.0	16.7	1.5	22.0	35	-- (6)
CU 4	4.0	24.2	1.7	31.9	50	-- (6)
CU 5	3.5	21.2	1.5	28.1	45	-- (6)
CU 6	3.5	21.2	1.5	28.1	45	-- (6)
CU 7	3.0	16.7	1.5	22.0	35	-- (6)
CU 8	4.0	24.2	1.7	31.9	50	-- (6)
CU 9	3.5	21.2	1.5	28.1	45	-- (6)
CU 10	2.5	14.1	1.4	18.7	30	-- (6)
CU 11	4.0	24.2	1.7	31.9	50	-- (6)
CU 12	4.0	24.2	1.7	31.9	50	-- (6)
CU 13	3.0	16.7	1.5	22.0	35	-- (6)

(1) REFRIGERANT R-410a
(2) AT DESIGN CONDITIONS AND 100°F ENTERING AIR TEMPERATURE TO CONDENSER.
(3) CONDENSING UNIT MARKS CORRESPOND WITH DX COIL AND FURNACE MARKS.
(4) ELECTRICAL CHARACTERISTICS-COMPRESSOR: 230V/1 PHASE/60HZ
(5) SEE SPECIFICATION FOR APPROVED MANUFACTURERS
(6) COORDINATE ACTUAL ELECTRICAL RATINGS OF UNIT SUPPLIED WITH DIVISION 26.

DX COIL SCHEDULE (1)

MARK	CALCULATED COOLING LOAD TOT.MBH	CALCULATED COOLING LOAD SEN.MBH	EVAPORATOR ENT. CONDITIONS DB °F	EVAPORATOR ENT. CONDITIONS WB °F	(3) A.C.F.M./ S.C.F.M.	(2) MAX. PR. DR. IN. W.G.	REMARKS (4)
CC 1a	39.8	31.7	80.3	65.8	1600/1357	0.29	--
CC 1b	39.8	31.7	80.3	65.8	1600/1357	0.29	--
CC 1c	39.8	31.7	80.3	65.8	1600/1357	0.29	--
CC 1d	39.8	31.7	80.3	65.8	1600/1357	0.29	--
CC 2a	33.3	27.1	81.1	66.7	1400/1187	0.19	--
CC 2b	33.3	27.1	81.1	66.7	1400/1187	0.19	--
CC 2c	33.3	27.1	81.1	66.7	1400/1187	0.19	--
CC 2d	33.3	27.1	81.1	66.7	1400/1187	0.19	--
CC 3	29.5	24.9	81.0	66.8	1350/1145	0.26	--
CC 4	42.9	35.1	81.7	67.0	1800/1526	0.35	--
CC 5	39.9	36.2	81.4	64.1	1600/1357	0.29	--
CC 6	35.9	32.9	81.2	65.0	1600/1357	0.29	--
CC 7	29.9	27.7	82.4	66.0	1350/1145	0.26	--
CC 8	42.7	37.6	80.8	64.9	1800/1526	0.35	--
CC 9	35.7	29.8	81.1	65.7	1450/1230	0.26	--
CC 10	22.9	21.8	83.4	67.1	1100/932	0.25	--
CC 11	44.7	36.0	81.5	66.5	1780/1509	0.35	--
CC 12	44.0	35.6	81.6	66.8	1780/1509	0.35	--
CC 13	32.3	29.2	82.0	64.6	1300/1102	0.26	--

(1) COMPLETE WITH FACTORY COIL BOX AND COIL
(2) WET COIL
(3) 4500 FEET ELEVATION. (0.848 CFM TRANSMISSION FACTOR)
(4) SEE SPECIFICATION FOR APPROVED MANUFACTURERS

ENERGY RECOVERY VENTILATOR

MARK (6)	CFM	ELECTRICAL FLA	ELECTRICAL MCA	ELECTRICAL VOLTS	ELECTRICAL HERTZ	ELECTRICAL PHASE	REMARKS
ERV 1a	840	17.2	19.4	115	60	1	(2)(3)
ERV 1c	840	17.2	19.4	115	60	1	(2)(4)
ERV 2a	1085	34.4	36.6	115	60	1	(5)
ERV 2c	1085	34.4	36.6	115	60	1	(5)
ERV 3	490	17.2	19.4	115	60	1	(1)
ERV 4	690	17.2	19.4	115	60	1	(1)
ERV 8	560	17.2	19.4	115	60	1	(1)
ERV 9	500	17.2	19.4	115	60	1	(1)
ERV 11	730	17.2	19.4	115	60	1	(1)
ERV 12	730	17.2	19.4	115	60	1	(1)

(1) RENEWAIRE MODEL HE1XINV. TWO 0.75 HP FANS. 25 MAX. FUSE SIZE.
(2) RENEWAIRE MODEL HE1XINH. TWO 0.75 HP FANS. 25 MAX. FUSE SIZE. COMPLETE WITH ACCESSORY HANGING BRACKETS.
(3) THIS UNIT TO BE HUNG UPSIDE DOWN AS SHOWN IN DETAIL AT RIGHT.
(4) THIS UNIT TO BE HUNG RIGHT SIDE UP CONNECT DUCTWORK AS LABELED AND AS SHOWN IN SECTION 3/M301.
(5) RENEWAIRE MODEL HE2XINV. TWO 15 HP FANS. 45 MAX. FUSE SIZE. COMPLETE WITH ACCESSORY HANGING BRACKETS.
(6) ENERGY RECOVERY VENTILATOR MARKS CORRESPOND WITH FAN UNIT MARKS.

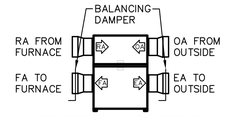

CONNECT MATCHING DUCTS TO LABELED CONNECTIONS

ERV-UNITS 2c, 3, 4, 8, AND 11

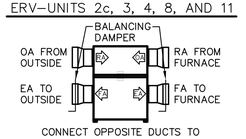

CONNECT OPPOSITE DUCTS TO LABELED CONNECTIONS

ERV-UNITS 2a, 9, AND 12

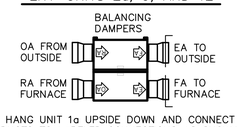

HANG UNIT 1a UPSIDE DOWN AND CONNECT DUCTS TO LABELED CONNECTIONS AS SHOWN. HANG UNIT 1c RIGHT SIDE UP AND CONNECT DUCTS AS LABELED.

ERV-UNITS 1a, AND 1c

ELECTRIC WALL HEATER SCHEDULE

MARK	SERVES	KW OUTPUT	ELECTRICAL ø	ELECTRICAL HERTZ	ELECTRICAL VOLTS	ELECTRICAL AMPS	REMARKS
EH 1	FIRE RISER ROOM 137	2.2	1	60	208	10.0	QMARK QFG22281F W/O BUILT IN TSTAT

GENERAL NOTES:

1. THE MECHANICAL CONTRACTOR SHALL VERIFY MOTOR VOLTAGES WITH THE ELECTRICAL DRAWINGS BEFORE ORDERING MOTORIZED EQUIPMENT AND CONTROLS. MOTOR NAME PLATE VOLTAGE SHALL BE NEMA STANDARD 200 VOLT FOR 208 VOLT THREE PHASE SYSTEM AND SHALL BE NEMA STANDARD 230 VOLT FOR 240 VOLT THREE PHASE OR SINGLE PHASE SYSTEM. STARTER HEATERS INSTALLED SHALL COORDINATED WITH THE NAME PLATE DATA.
2. S.C.F.M. LISTED IS STANDARD AIR. A.C.F.M. LISTED IS ACTUAL AIR AT ELEVATION NOTED.

DESIGN CONDITIONS	OUTSIDE	INSIDE
WINTER	0°F	70°F
SUMMER	100°F db, 70°F wb	75°F db, 64°F wb

Architect / Engineer:
BOTT PANTONE ARCHITECTS
620 24TH STREET
OGDEN, UT 84401
(801) 394-3053 VOICE
P 801 394 3033
F 801 394 0064

Stamp:
Registered Professional Engineer
NO. 3572
LELAND P. DAVIS
10/30/18
State of Utah

NIBLEY 12 & MENDON UTAH STAKE CENTER
APPROX. 1585 W. 3200 S.
NIBLEY, UTAH

Project for:
THE CHURCH OF JESUS CHRIST OF LATTER-DAY SAINTS

Mark	Date	Description
	30-OCT-18	BID SET

Project Number: 1770
Plan Series: HET-SDS-09-07
Property Number: 5002240-17-010201

Sheet Title: MECHANICAL SCHEDULES

Sheet: M601

F:\1project\18019 Nibley 12 Wards\Drawings\HET-SDS-09-07\HET-SDS-09-07\Instk\HET-SDS-09\HSDS-M601.dwg, 10/21/2018 9:29:10 PM

DIFFUSER SCHEDULE (2) (4)

MARK	C.F.M. RANGE (1)	DIFFUSER SIZE	NECK CONN.	BLOW	PATTERN	AIR DIST./SIDE A (%)	AIR DIST./SIDE B (%)
D-1	40 – 120	6X6	6"ø	2 WAY		50	50
D-2	40 – 120	6X6	6"ø	4 WAY		25	25
D-3	125 – 230	9X9	8"ø	3 WAY		38	31
D-4	125 – 220	9X9	8"ø	4 WAY		25	25
D-5	110 – 220	9X9	8"ø	2 WAY		50	50
D-6	130 – 220	9X9	8"ø	2 WAY		50	50
D-7	225 – 330	12X12	10"ø	4 WAY		25	25
D-8	335 – 500 (16)	12X12	12"ø	4 WAY		25	25
D-9	NOT USED	15X15	14"ø	4 WAY		25	25
D-10	800–815	15X21	15X21	3 WAY		35	33

REGISTER,LOUVER & GRILLE SCHEDULE

MARK	T Y P E	SERVICE	CFM RANGE (1)	NOMINAL SIZE	REMARKS (3)
R-1	SIDEWALL (5) (6)	RA	100–235	12X8	SERVICED BY 12X5 UNLINED R.A. DUCT IN WALL (10)
R-2	CEILING (4)	RA	100–220	8X8	
R-3	CEILING (4)	RA	230–300	10X10	
R-4	CEILING (4)	RA	305–480	12X12	
R-5	CEILING (4)	RA	485–820	16X16	
R-6	CEILING (4)	TRANSFER AIR	350–490	12X12	
R-7	SIDEWALL (5) (6)	RA	890	18X20	(10) (14)
R-8	SIDEWALL (5) (6)	RA	2800–3020	36X30	(10) (14)
R-9	SIDEWALL (5) (6)	RA	3200	24X48	(10) (14)
R-10	CEILING (5)	TRANSFER AIR	--	30X20	(15)
R-11	CEILING (5)	TRANSFER AIR	--	24X24	
S-1	SIDEWALL (5)	SA	780–850	18X12	(9)
S-2	SIDEWALL (5)	SA	1400–1510	24X16	(9)
SG-1	SOFFIT GRILLE (5)	OA	250–840	42X26	(12) (14)
SG-2	SOFFIT GRILLE (5)	EA	2955–2995	42X26	(12) (14)
PH-1	PENTHOUSE	EA	705–830	18X18 THROAT	(8) (12)
L-1	LOUVER	EA	915–1065	36X18	(8) (11) (12)
L-2	LOUVER	OA	3145–3505	60X36	(8) (11) (12)
L-3	LOUVER	ARCHITECT	N/A	72X48 TRIANGLE AT TOP	(8) (12) (17)
L-4	NOT USED				
L-5	LOUVER	ARCHITECT	N/A	12X12	(8) (12) (13)

EXHAUST FAN SCHEDULE (2) (3)

MARK	S E R V E S R O O M	MIN. (1) A.C.F.M.	STATIC PRESSURE IN. W.G.	MINIMUM WATTS	R E M A R K S
EF 1	WOMEN'S RESTROOM 176	490	0.375	420W	PROVIDE BACK-DRAFT DAMPER
EF 2	MEN'S RESTROOM 172	350	0.375	420W	PROVIDE BACK-DRAFT DAMPER
EF 3	MOTHER'S ROOM 114	70	0.375	81W	PROVIDE BACK-DRAFT DAMPER
EF 4	RESTROOM 155	75	0.5	100W	PROVIDE BACK-DRAFT DAMPER
EF 5	RESTROOM 104	75	0.5	100W	PROVIDE BACK-DRAFT DAMPER
EF 6	SERVING AREA 116	200	0.375	166W	PROVIDE BACK-DRAFT DAMPER
EF 7	CUSTODIAN 163	70	0.375	81W	PROVIDE BACK-DRAFT DAMPER
EF 8	TECHNOLOGY 103	150	0.5	130W	PROVIDE BACK-DRAFT DAMPER (4)
EF 9	FONT 179	200	0.375	166W	PROVIDE BACK-DRAFT DAMPER
EF 10	RESTROOM 144	75	0.3	81W	PROVIDE BACK-DRAFT DAMPER

(1) SET BALANCE DAMPERS SHOWN ON M101 TO CFM LISTED

(2) CONTROL BY DIVISION 26.

(3) VOLTAGE IS 115V/1 PHASE/60HZ

(4) LINE VOLTAGE THERMOSTAT CONTROL. ACCESSORY THERMOSTAT BY DIV. 23, INSTALLED BY DIV. 26.

REGISTER, LOUVER AND DIFFUSER SCHEDULE NOTES:

(1) MAXIMUM NC=25 @ MAXIMUM CFM NOTED.

(2) SHALL BE TITUS TDC TYPE 6 OR EQUAL BY OTHER APPROVED MANUFACTURERS. (SEE SPECIFICATIONS)

(3) SEE SPECIFICATIONS FOR APPROVED MANUFACTURERS.

(4) FINISH SHALL BE OFF-WHITE BAKED ENAMEL.

(5) BAKED ENAMEL FINISH WITH COLOR AS DIRECTED BY ARCHITECT.

(6) RETURN AIR GRILLE TO BE MOUNTED 8" FROM FLOOR TO BOTTOM EDGE OF GRILLES.

(7) BAKED ENAMEL FINISH TO MATCH ROOF COLOR OR COLOR AS DIRECTED BY ARCHITECT.

(8) PROVIDE ALUMINUM BIRD SCREENS.

(9) SET REGISTER BLADES FOR 15° UPWARD DEFLECTION.

(10) BLADE ORIENTATION SHALL BE HORIZONTAL

(11) MAX. ACCEPTABLE FACE VELOCITY THROUGH NET FREE AREA: 400 FT/MIN.

(12) FINISH COLOR AS DIRECTED BY ARCHITECT, TO MATCH SURROUNDING SURFACE FINISH.

(13) ON STORAGE BUILDING. NOT CONNECTED TO DUCTWORK. SEE ELEVATION F/C801.

(14) REFER TO DETAIL E/M502 FOR GRILLE INSTALLATION.

(15) CEILING MOUNTED FILTER GRILLE. COORDINATE EXACT LOCATION WITH STRUCTURAL. POSITION BLADES TOWARD DOORS TO LIMIT LINE-OF-SIGHT INTO ATTIC.

(16) PROVIDE 24"x24" PANEL FOR LAY-IN CEILING AT ROOM 123 AND ROOM 131.

(17) NOT CONNECTED TO DUCTWORK. SEE ELEVATION 1/A202.

Architect / Engineer:
BOTT PANTONE ARCHITECTS
630 24TH STREET
OGDEN, UT 84401
ENGINEERS@BOTTPANTONE.NET
P 801 394 3033
F 801 394 0064

Stamp:
Registered Professional Engineer
NO. 3572
LELAND P. DAVIS
10/30/18
State of Utah

NIBLEY 12 & MENDON UTAH STAKE CENTER
APPROX. 1585 W. 3200 S.
NIBLEY, UTAH

Project for:
THE CHURCH OF JESUS CHRIST OF LATTER-DAY SAINTS

Mark	Date (DMY)	Description
30-OCT-18		BID SET

Project Number: 1770
Plan Series: HET-SDS-09-07
Property Number: 50002240-17-010201

Sheet Title: MECHANICAL SCHEDULES

Sheet: M602

F:\1project\18019 Nibley 12 Wards\Drawings\HET-SDS-09-07\HET-SDS-09-07\Instk\HET-SDS-09\HSDS-M602.dwg, 10/21/2018 9:30:00 PM

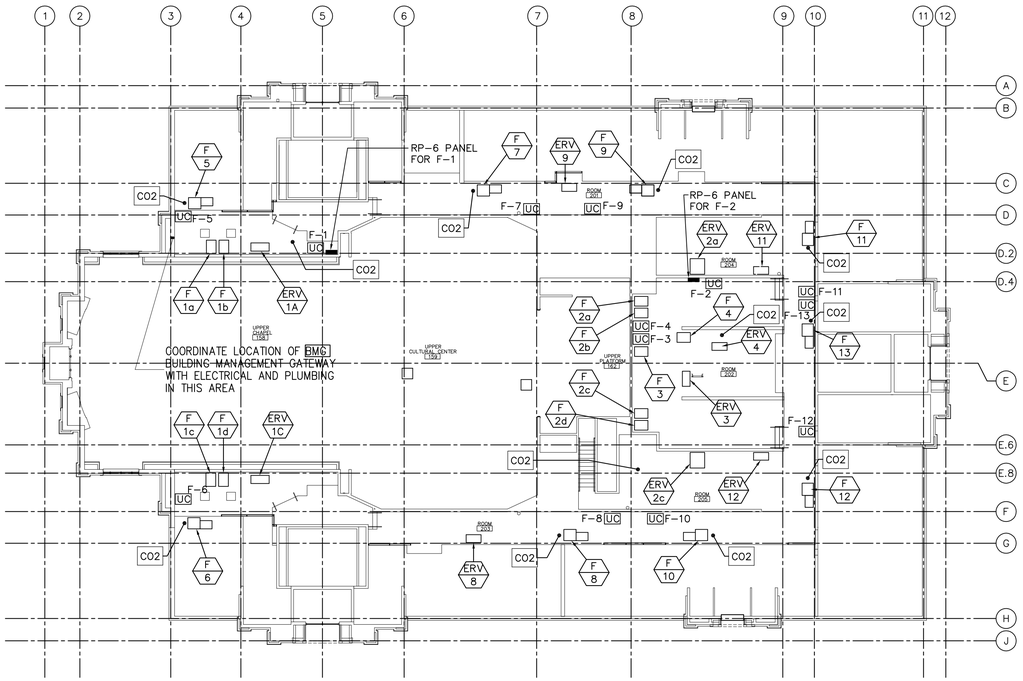

2 AUTOMATIC TEMPERATURE CONTROL – EQUIPMENT PLATFORM PLAN

SCALE: 1/16"=1'-0"

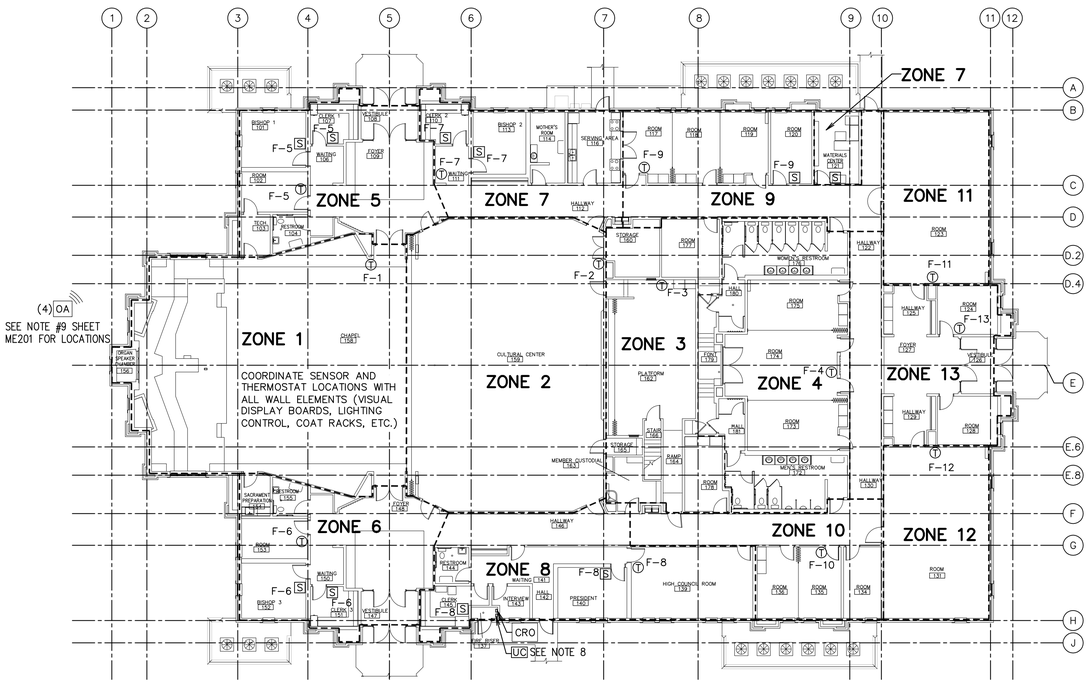

1 AUTOMATIC TEMPERATURE CONTROL – FLOOR PLAN

SCALE: 1/16"=1'-0"

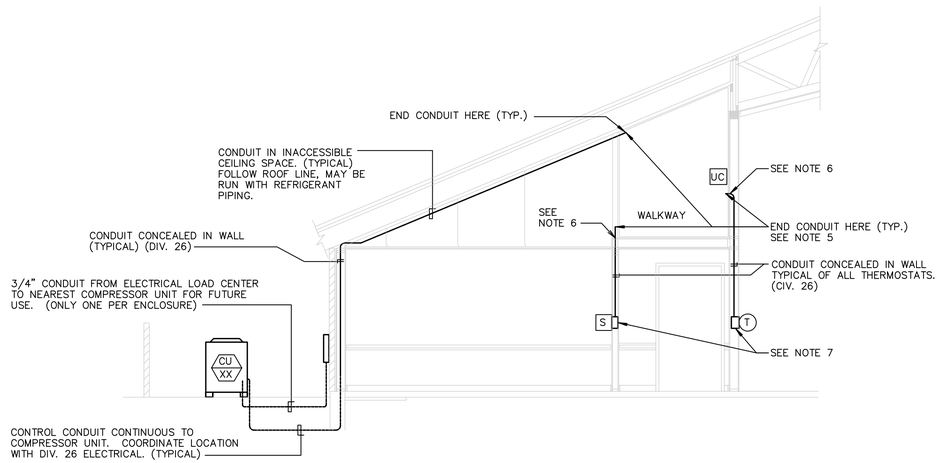

A MINIMUM REQUIRED CONDUIT–TYPICAL DETAIL

SCALE: NONE

NOTE:
ALL TEMPERATURE CONTROL CONDUIT SHALL BE FURNISHED AND INSTALLED BY DIVISION 26.

SYMBOLS

UC	UNITARY CONTROLLER (DIV 23). MOUNT MODULE IN ACCESSIBLE LOCATION ON OR NEAR ASSOCIATED FURNACE.
RP–6	RELAY PANEL (DIV 23) MOUNT 5'–0" TO BOTTOM OF CABINET
T	THERMOSTAT (LCBS) OUTLET (DIV 26)
S	INDOOR AIR SENSOR OUTLET (DIV 26)
BMG	BUILDING MANAGEMENT GATEWAY (DIV 23)
OAS	GLOBAL OUTDOOR AIR SENSOR (DIV 23) TO BE INSTALLED ON THE NORTH SIDE OF THE BUILDING (OUT OF DIRECT SUNLIGHT) AND CONNECTED TO ANY ZONE.
CO_2	CO_2 SENSOR (DIV 23) INSTALL UPSTREAM OF RELIEF OR OUTSIDE AIR CONNECTON.
CRO	COMBINATION RELAY AND THERMAL OVERLOAD DISCONNECT (W/20 AMP RIB RELAY 2401B)
SD	DUCT SMOKE DETECTOR

NOTES:

1. BOXES FOR THERMOSTAT (T) AND [S] OUTLETS SHALL BE 2"X4" WITH LONG DIMENSION VERTICAL. USE METAL BRACKET OF COVER PLATE ASSEMBLY TO MOUNT THERMOSTAT HORIZONTAL.
2. CONDUIT TO BE 1/2" UNLESS NOTED OTHERWISE.
3. TEMPERATURE CONTROL WIRING THAT IS NOT IN CONDUIT SHALL BE RUN PARALLEL AND PERPENDICULAR TO BUILDING CONSTRUCTION LINES. SEE SPECIFICATIONS FOR ACCEPTABLE FASTENING METHODS AND MAXIMUM ALLOWABLE SPACING BETWEEN FASTENERS.
4. TEMPERATURE CONTROL WIRING THAT IS NOT IN CONDUIT SHALL BE LABELED. PROVIDE A LABEL AT ALL POINTS WHERE TEMPERATURE CONTROL WIRING ENTERS CONDUIT AND AT CONNECTIONS TO DEVICES.
5. SEAL OPEN END OF CONDUIT AIR–TIGHT AROUND THERMOSTAT/SENSOR WIRE WITH SEALANT COMPOUND. SEE SPECS FOR APPROVED PRODUCT.
6. SEAL ANNULAR SPACE BETWEEN CONDUIT AND OPENING IN FLOOR OR WALL WITH SEALANT COMPOUND. SEE SPECS FOR APPROVED PRODUCT.
7. SEAL OPEN END OF CONDUIT AT J–BOX AIR–TIGHT AROUND THERMOSTAT/SENSOR WIRE. SEAL ALL AIR GAPS AROUND J–BOX TO ISOLATE J–BOX FROM WALL CAVITY. SEAL BACK OF THERMOSTAT AROUND WIRES. PACK J–BOX TIGHT WITH GLASS FIBER BAT INSULATION. USE SEALING COMPOUND SPECIFICALLY MADE FOR REFRIGERATION AND AIR–CONDITIONING APPLICATIONS. SEE SPECIFICATIONS FOR APPROVED PRODUCTS.
8. ELECTRIC HEATER ZONE. CONNECT UC TO 20 AMP RELAY AND THEN TO THERMAL OVERLOAD. REFER TO WIRING DIAGRAM, SHEET ME701.

Architect / Engineer:
BOTT PANTONE ARCHITECTS
620 24TH STREET
OGDEN, UT 84401
(BOTT PANTONE BUILDING SET)
P 801 394 3033
F 801 394 0064

Stamp:
Registered Professional Engineer
NO. 3572
LELAND P. DAVIS
10/30/18
State of Utah

NIBLEY 12 & MENDON UTAH STAKE CENTER

APPROX. 1585 W. 3200 S.
NIBLEY, UTAH

Project for:
THE CHURCH OF JESUS CHRIST OF LATTER-DAY SAINTS

Mark	Date (DAAY)	Description
		30-OCT-18 BID SET

Project Number: 1770
Plan Series: HET-SDS-09-07
Property Number: 5002240-17-010201

Sheet Title: AUTOMATIC TEMPERATURE CONTROL FLOOR PLAN

Sheet: ME101

F:\1project\18019 Nibley 12 Wards\Drawings\HET-SDS-09-07\HET-SDS-09-07\hstk\HET-SDS-09\HSDS-ME101.dwg, 10/21/2018 9:30:49 PM

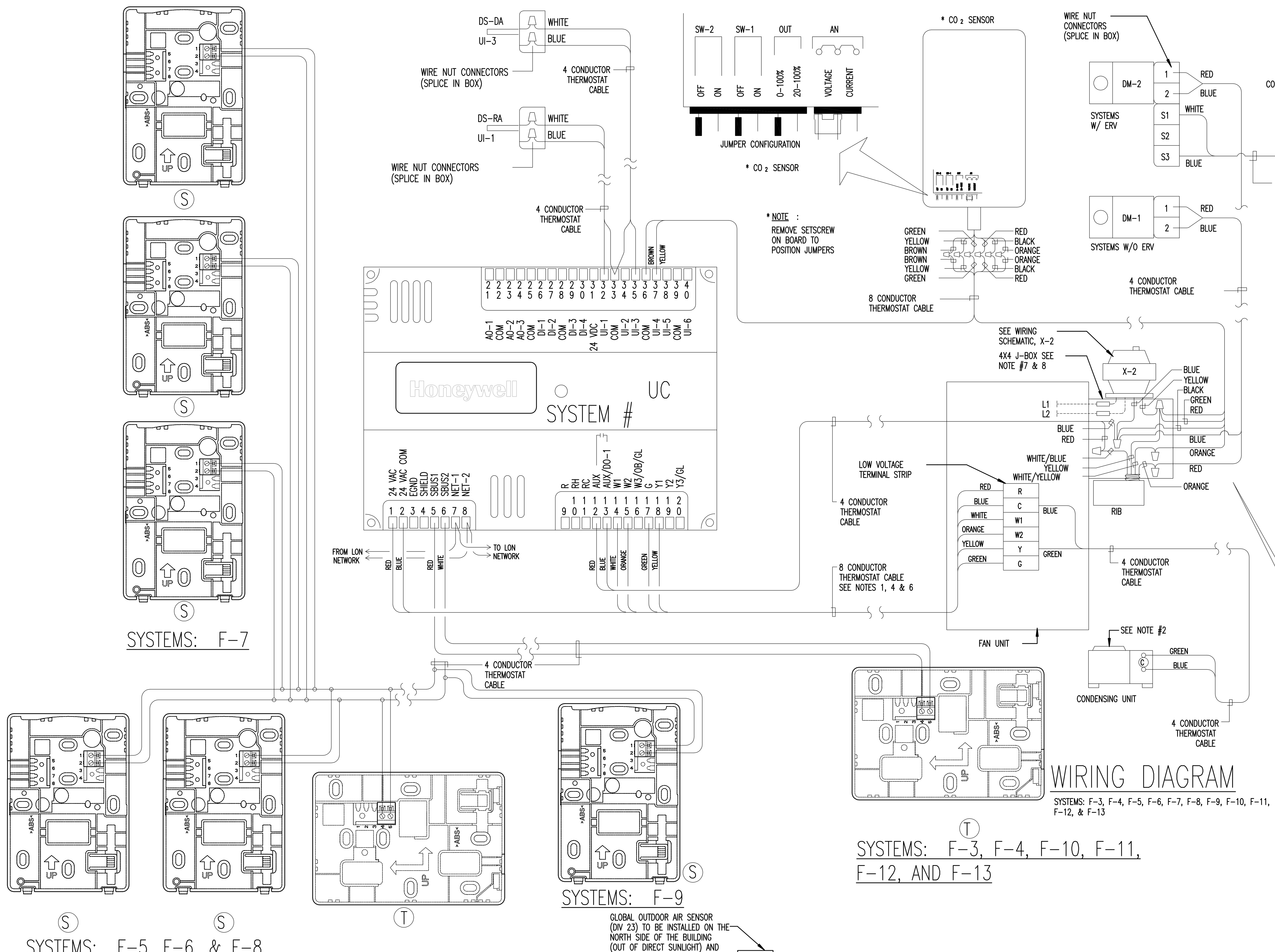

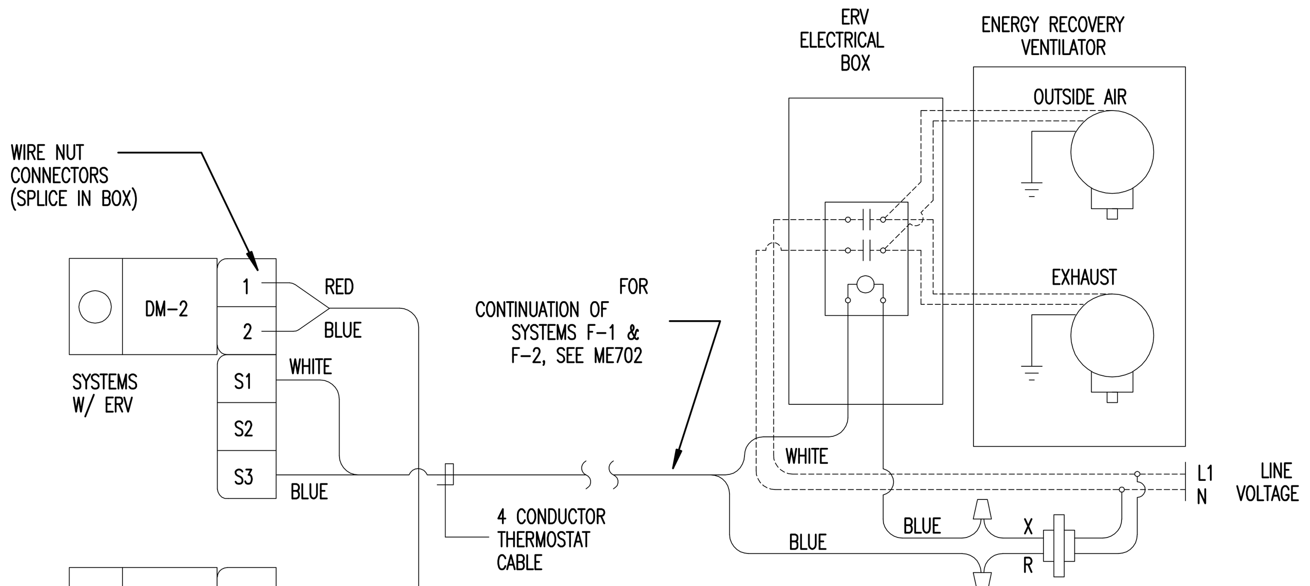

A ENERGY RECOVERY VENTILATOR WIRING

SYSTEMS: F-1, F-2, F-4, F-8, F-9, F-11 AND F-12

NOTES :

1. THERMOSTAT CABLE- 4, 8 OR 12 CONDUCTOR- 18 AWG SOLID COPPER WIRE INSULATED WITH HIGH DENSITY POLYETHYLENE. CONDUCTORS PARALLEL. ENCLOSED IN BROWN PVC JACKET. (NO 22 AWG CABLE ALLOWED).
2. IF COMPRESSOR UNITS HAVE THEIR OWN POWER SUPPLY IT MAY BE NECESSARY TO ADD ADDITIONAL RELAYS IN COMPRSSOR UNIT TO PROPERLY INTERFACE CONTROLS.
3. USE WIRE NUT CONNECTORS FOR SPLICING CONDUCTORS IN SPECIFIED LOCATIONS. AND TYTON TYPE CRIMP CONNECTORS FOR TERMINAL CONNECTIONS. NO TERMINAL CONNECTORS REQUIRED AT THERMOSTAT OR SENSOR.
4. DO NOT RUN ANY OTHER WIRING IN THIS CONDUIT EXCEPT THERMOSTAT CABLE.
5. VERIFY THAT FAN UNIT FAN SPEED CONTROL WIRING IS SET TO MATCH SCHEDULE SHEET AND THAT FAN OPERATES AT COOLING SPEED ONLY.
6. DO NOT SPLICE WIRE IN RUNS FROM SENSOR TO THERMOSTAT, THERMOSTAT TO FURNACE, AND THERMOSTAT TO DISCHARGE AIR SENSOR.
7. PROVIDE CHASE NIPPLE WITH PLASTIC BUSHING WHEN ATTACHING J-BOX TO EQUIPMENT.
8. PROVIDE CABLE-CLAMP SO THAT CABLES CANNOT BE PULLED OUT OF J-BOX.

CONTROL EQUIPMENT

MARK	DESCRIPTION	CAT. NO. (1)	MARK	DESCRIPTION	CAT. NO. (1)
BMG	BUILDING MANAGEMENT GATEWAY	LGW1000 (GATEWAY) WPM-8000 (WALL PLUG)	RP-6	RELAY PANEL 24X18X6W/COVER	(2) (4)
UC	UNITARY CONTROLLER	YCRL64385R1000	DM-1	DAMPER MOTOR TWO POSITION	MS8105A1030
T	THERMOSTAT WALL MODULE	LCBS WALL MODULE	DM-2	DAMPER MOTOR 2 POS W/END SWITCH	MS8105A1130
	THERMOSTAT COVER PLATE ASSEMBLY	50002883-001	X-1	TRANSFORMER 120, 208, 240V/24V 75VA	AT175F1023
S	REMOTE SENSOR	TR40	X-2	TRANSFORMER 120V/24V 50VA	AT150F1022
G-1	THERMOSTAT GUARD	(2)	SD-1	DUCT SMOKE DETECTOR	(2)
DS	DUCT AIR SENSOR	C7041B2005	SR	SMOKE RELAY 30 AMP 120V COIL	DP2030B5003 (3)
CO_2	CO_2 SENSOR	C7232B1006	RIB	TWO POLE RELAY	RIBU1C (2)
			RIB 20A	TWO POLE RELAY 20 AMP	RIB2401B (6)
			OAS	GLOBAL OUTDOOR AIR SENSOR	C7041F2006 (7)
			CRO	COMBINATION RELAY & THERMAL OVERLOAD DISCONNECT	(2) (4)
BPD	BYPASS DAMPER	CPRD12	E-BUS	ECHELON NETWORK CABLE	W221P-2001B

(1) ALL CATALOG NUMBERS SHOWN ARE HONEYWELL UNLESS NOTED OTHERWISE.
(2) SEE SPECIFICATIONS
(3) PROVIDE ENCLOSURE
(4) TO BE PURCHASED FROM AN APPROVED PER-BUILT PANEL BUILDER SEE SPECIFICATION.
(5) DELETED.
(6) USE WITH CRO DISCONNECTFOR ELECTRIC WALL HEATER. CONTROL FROM UC.
(7) ONLY ONE REQUIRED FOR BUILDING. MAY BE CONNECTED TO ANY CONTROLLER AT NORTH SIDE.

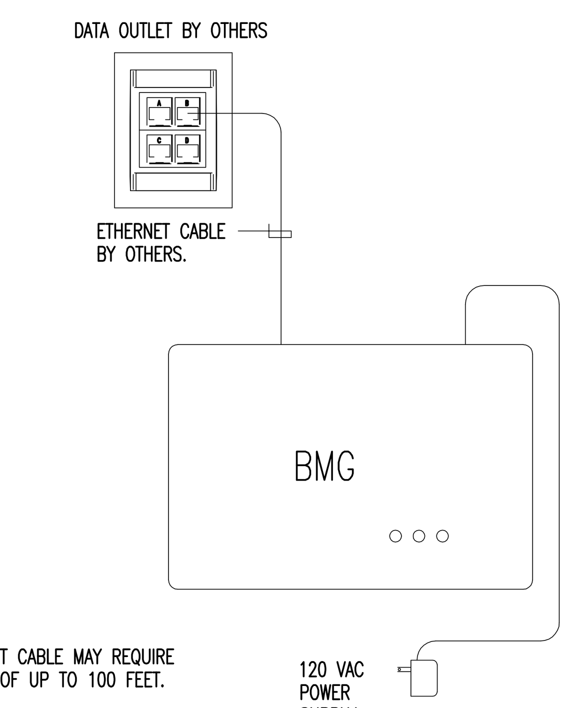

NOTE :

1. ETHERNET CABLE MAY REQUIRE LENGTH OF UP TO 100 FEET.

BMG WIRING DIAGRAM

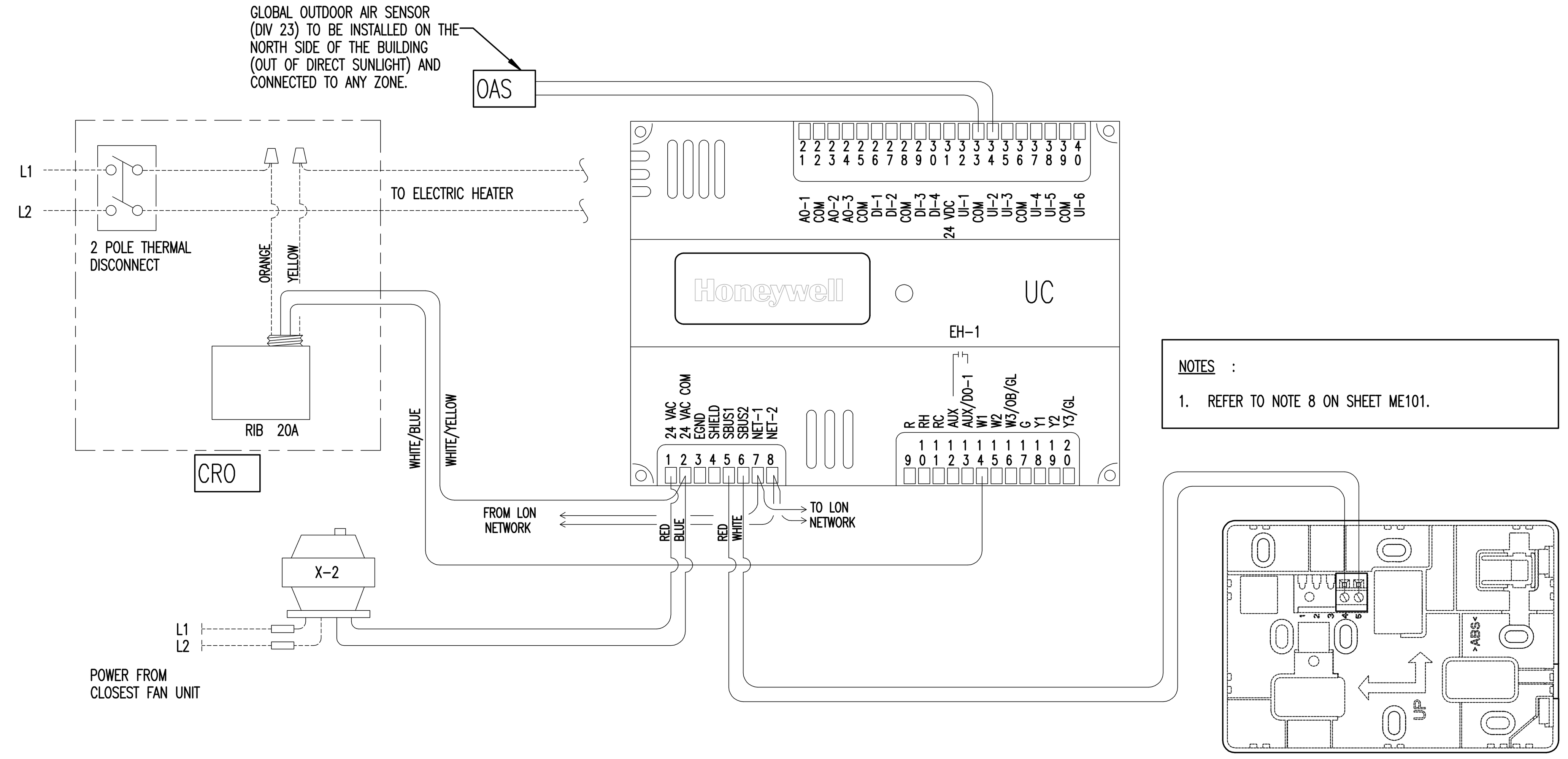

NOTES :

1. REFER TO NOTE 8 ON SHEET ME101.

ELECTRIC HEATER WIRING DIAGRAM

SYSTEM: EH-1

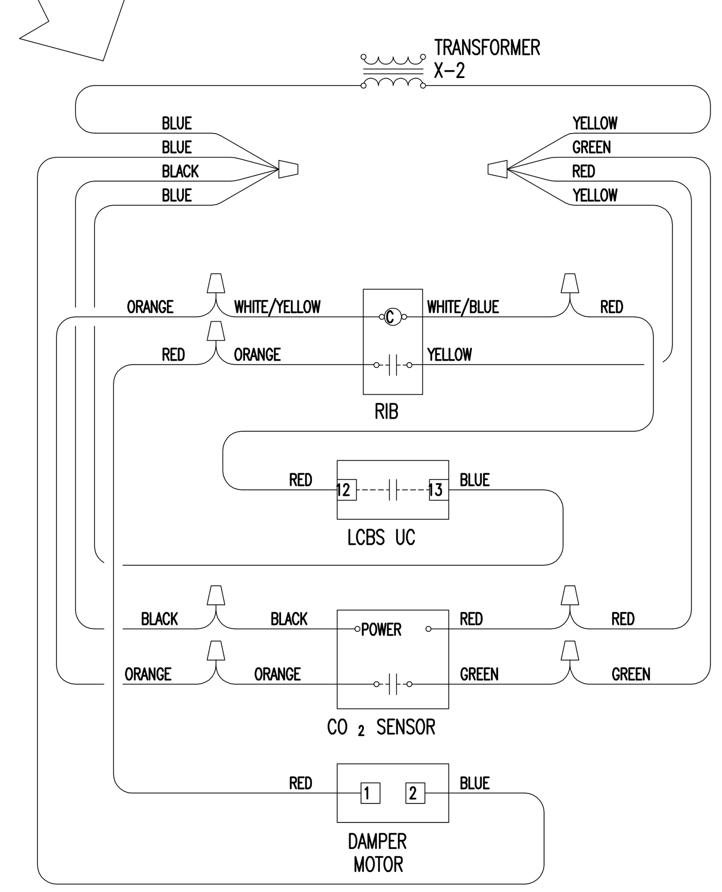

WIRING SCHEMATIC, X-2

LEGEND:

- - - - DIVISION 26 OR FACTORY PRE-WIRED
——— DIVISION 23 WIRING

NOTES :

1. ECHELON BUS (E-BUS) MUST BE INSTALLED AT LEAST 12" AWAY FROM ALL ELECTRICAL DEVICES: I.E. MOTORS, LIGHT, ETC.
2. DO NOT USE THERMOSTAT CABLE AS NETWORK CABLE. USE SPECIFIED CABLE.

Architect / Engineer:
BOTT PANTONE ARCHITECTS
620 24TH STREET
OGDEN, UT 84401
BP-ARCHITECTS.NET
P 801.394.3033
F 801.394.9064

Stamp: Registered Professional Engineer NO. 3572 LELAND P. DAVIS 10/30/18 State of Utah

NIBLEY 12 & MENDON UTAH STAKE CENTER
APPROX. 1585 W. 3200 S. NIBLEY, UTAH

Project for: THE CHURCH OF JESUS CHRIST OF LATTER-DAY SAINTS

Mark	Date (D-M-Y)	Description
	30-OCT-18	BID SET

Project Number: 1770
Plan Series: HET-SDS-09-07
Property Number: 5002240-17-010201

Sheet Title: AUTOMATIC TEMPERATURE CONTROL WIRING AND SCHEDULES

Sheet: ME701

F:\1project\18019 Nibley 12 Wards\Drawings\HET-SDS-09-07\HET-SDS-09-07\hstk\HET-SDS-09\HSDS-ME701.dwg, 10/21/2018 9:31:44 PM

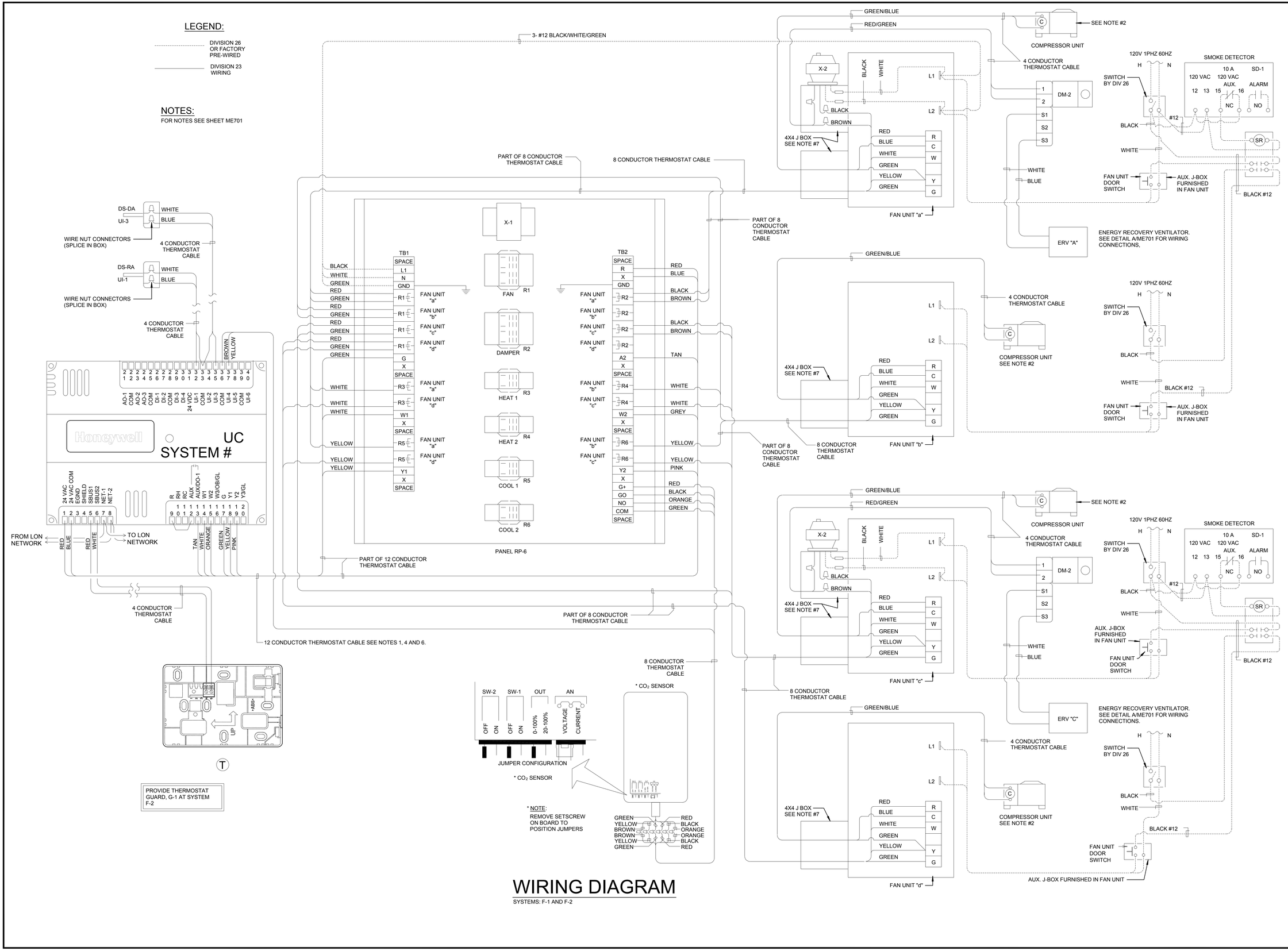

WIRING DIAGRAM

SYSTEMS: F-1 AND F-2

Architect / Engineer:

BOTT PANTONE ARCHITECTS

620 24TH STREET
OGDEN, UT 84401
BP-ARCHITECTS.NET
P 801.394.3033
F 801.394.9064

Stamp:

Registered Professional Engineer
NO. 3572
LELAND P. DAVIS
10/30/18
State of Utah

NIBLEY 12 & MENDON UTAH STAKE CENTER

APPROX. 1585 W. 3200 S.
NIBLEY, UTAH

Project for:

THE CHURCH OF JESUS CHRIST OF LATTER-DAY SAINTS

Mark	Date (D-M-Y)	Description
	30-OCT-18	BID SET

Project Number: 1770

Plan Series: HET-SDS-09-07

Property Number: 5002240-17-010201

Sheet Title: AUTOMATIC TEMPERATURE CONTROL WIRING

Sheet: ME702

F:\1project\18019 Nibley 12 Wards\Drawings\HET-SDS-09-07\HET-SDS-09-07\hstk\HET-SDS-09\HSDS-ME702.dwg, 10/21/2018 9:32:44 PM

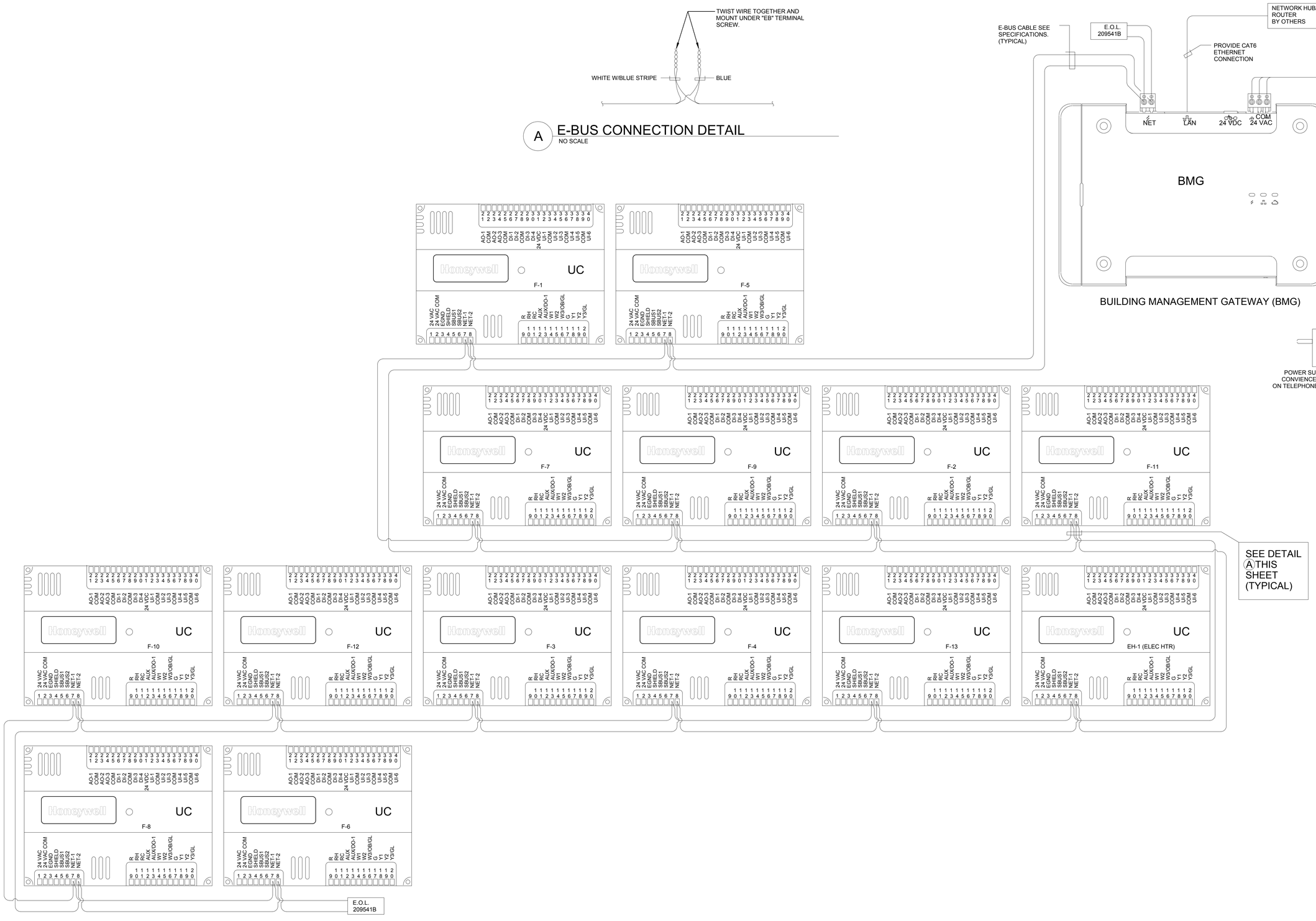

E-BUS WIRING DIAGRAM

Architect / Engineer:

BOTT PANTONE ARCHITECTS

620 24TH STREET
OGDEN, UT 84401
BP-ARCHITECTS.NET
P 801.394.3033
F 801.394.9064

Stamp:

Registered Professional Engineer
NO. 3572
LELAND P. DAVIS
10/30/18
State of Utah

NIBLEY 12 & MENDON UTAH STAKE CENTER

APPROX. 1585 W. 3200 S.
NIBLEY, UTAH

Project for:

THE CHURCH OF JESUS CHRIST OF LATTER-DAY SAINTS

Mark	Date (D-M-Y)	Description
30-OCT-18	BID SET	

Project Number: 1770

Plan Series: HET-SDS-09-07

Property Number: 5002240-17-010201

Sheet Title: AUTOMATIC TEMPERATURE CONTROL WIRING

Sheet: ME703

F:\1project\18019 Nibley 12 Wards\Drawings\HET-SDS-09-07\HET-SDS-09-07\tstk\HET-SDS-09\HSDS-ME703.dwg, 10/21/2018 9:33:31 PM

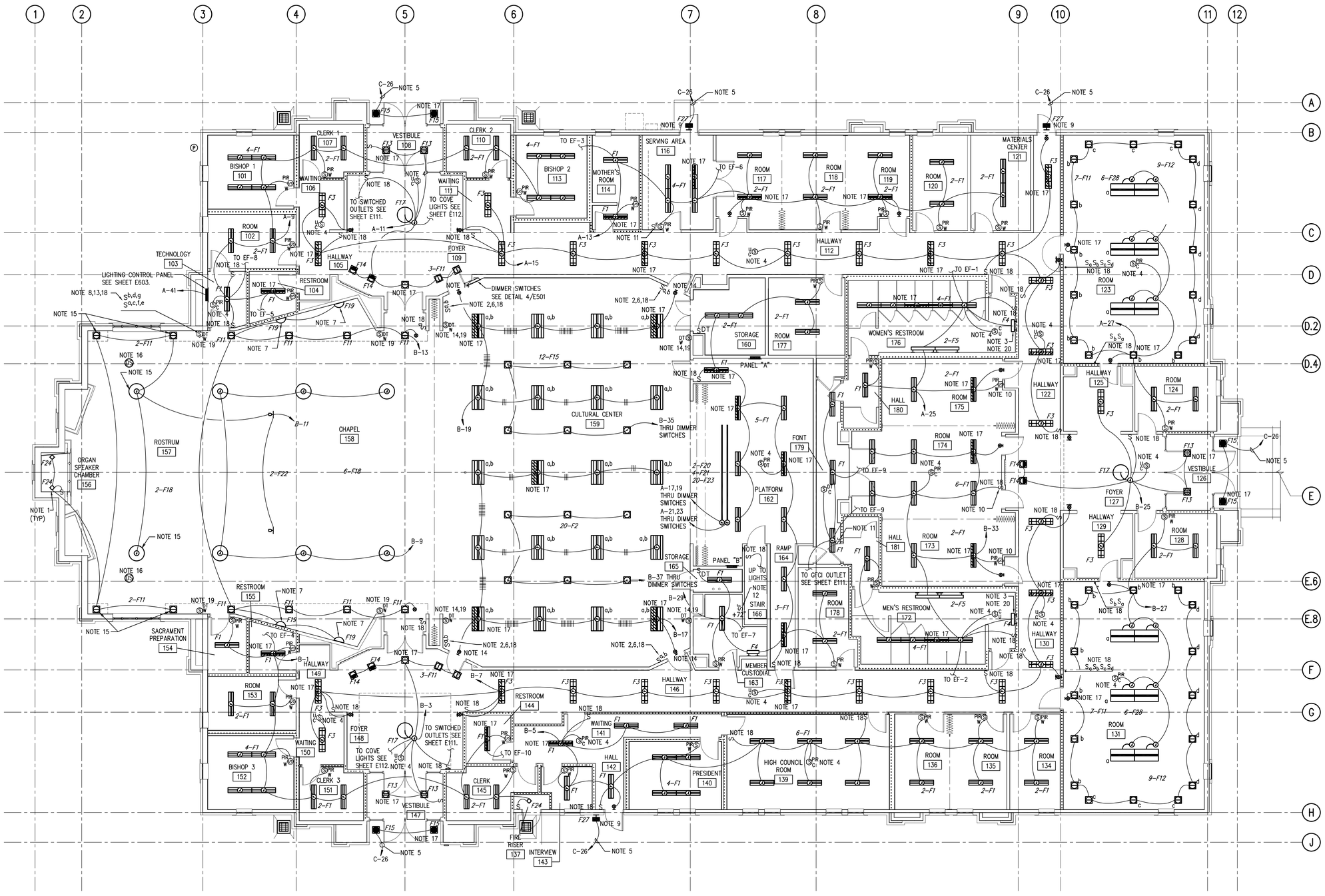

1 MAIN FLOOR LIGHTING PLAN
1/8" = 1'-0"

NORTH

NOTES

1. MOUNT LIGHTS ON UNDERSIDE OF UPPER SHELF IN ORGAN SPEAKER CHAMBER.
2. LIGHT FIXTURES IN CULTURAL CENTER TO BE CONTROLLED BY TWO SWITCHES, TWO OUTSIDE LAMPS AND TWO INSIDE LAMPS ON EACH.
3. FIXTURE TO BE ON CONTINUOUSLY (NOT SWITCHED).
4. PROVIDE SUFFICIENT BOX DEPTH AND CORRECT PLASTER RING TO ACCOMMODATE ACTUAL RELAY UNIT AND OCCUPANCY SENSOR INSTALLED. ALSO PROVIDE PROPER SEPARATION OF 120V AND CLASS 2 WIRING AS NECESSARY IN ACCORDANCE WITH N.E.C SET SENSITIVITY AND TIME DELAY OF SENSOR AT MAXIMUM.
5. CIRCUIT THROUGH LIGHTING CONTROL PANEL WITH PHOTOCELL CONTROL. SEE LIGHTING CONTROL DIAGRAM ON SHEET E603.
6. SEE DETAIL 3/E501 FOR SWITCH LABELING.
7. MOUNT WALL SCONCE AT 7'-6" A.F.F. TO TOP OF FIXTURE.
8. SEE DETAIL 2/E501 FOR SWITCH LABELING.
9. FURNISH AND INSTALL A REMOTE EMERGENCY BATTERY PACK. THE BATTERY PACK SHALL BE INSTALLED IN THE MEZZANINE.
10. SEE DETAIL N/A407 FOR SWITCH MOUNTING.
11. CIRCUIT EXHAUST FAN WITH LIGHTS IN THIS ROOM AND CONTROL WITH MANUAL TIMER SWITCH.
12. CIRCUIT EXHAUST FAN WITH LIGHTS IN THIS ROOM AND CONTROL WITH INTERVAL TIMER SWITCH.
13. COORDINATE LOCATION OF SWITCHES WITH THE ARCHITECT AND OWNER PRIOR TO ROUGH-IN.
14. PROVIDE WIRE GUARD.
15. FURNISH AND INSTALL 0-10V CONTINUOUS DIMMING BALLASTS IN THE INDICATED FIXTURES. COORDINATE THE BALLASTS, LAMPS, AND LIGHTING CONTROL PANEL RELAYS SO THAT THE DIMMING SYSTEM FUNCTIONS APPROPRIATELY. REFER TO SHEET E603 FOR ADDITIONAL REQUIREMENTS.
16. FURNISH AND INSTALL A DAYLIGHT DIMMING SENSOR. REFER TO SHEET E603 FOR ADDITIONAL REQUIREMENTS.
17. FURNISH AND INSTALL A 90 MINUTE EMERGENCY BATTERY PACK IN THE INDICATED FIXTURES. PROVIDE AN UNSWITCHED CIRCUIT LEG FOR MONITORING AND BATTERY CHARGING. REFER TO SPECIFICATION FOR MORE REQUIREMENTS.
18. MOMENTARY CONTACT SWITCH. SEE SHEET E603.
19. WALL MOUNT DUAL TECHNOLOGY SENSOR MOUNTED AT+90". SEE SHEET E603.
20. CENTER LIGHT ABOVE MIRROR BELOW. SEE SHEET A401.

GENERAL NOTES

1. EXACT LOCATION OF LIGHT FIXTURES SHALL BE AS SHOWN ON REFLECTED CEILING PLAN SHEET A151.
2. CEILING MOUNTED OCCUPANCY SENSORS SHALL NOT BE INSTALLED WITHIN 6 FEET OF ANY MECHANICAL DIFFUSER.
3. LOWER CASE LETTERS ON OR NEAR FIXTURES INDICATE CONTROLLING SWITCHES. SWITCH LEGS NOT ALWAYS SHOWN.

Architect / Engineer:
BOTT PANTONE ARCHITECTS
620 24TH STREET
OGDEN, UT 84401
BP-ARCHITECTS.NET
P 801.394.3033
F 801.394.9064

Stamp:
LICENSED PROFESSIONAL ENGINEER
No. 218188
KENNETH D. GARNER
STATE OF UTAH

NIBLEY 12 & MENDON UTAH STAKE CENTER

APPROX. 1585 W. 3200 S.
NIBLEY, UTAH

Project for:
THE CHURCH OF JESUS CHRIST OF LATTER-DAY SAINTS

Mark	Date (D-M-Y)	Description
-	30-OCT-18	BID SET

Project Number: 1770
Plan Series: HET-SDS-09-07
Property Number: 5002240-17-010201

Sheet Title: MAIN FLOOR LIGHTING PLAN

Sheet: E101

HSDS-E101.dwg - 10/22/2018 - 1:46 PM

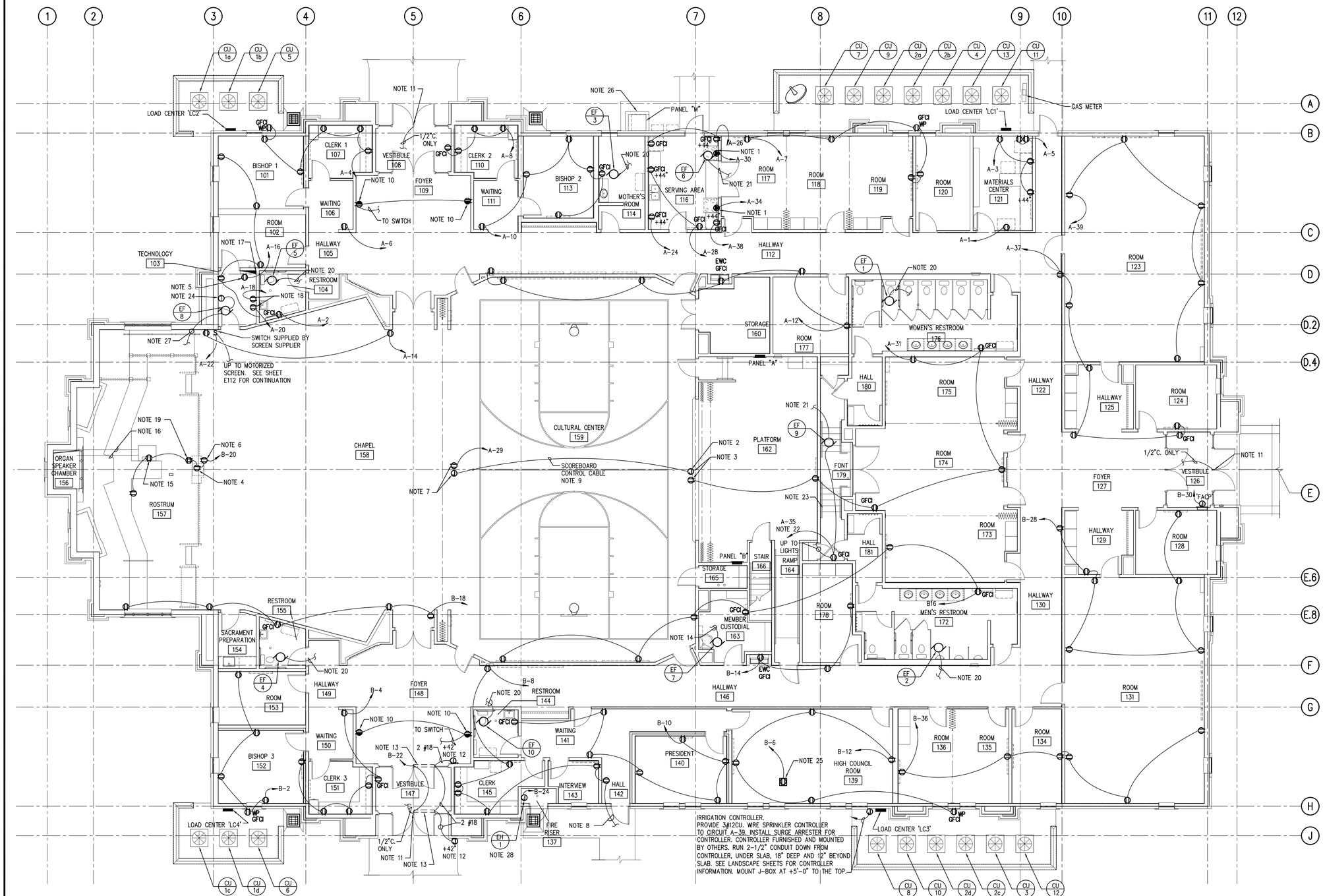

NOTES

1. LOCATE OUTLET SO RANGE WILL SIT TIGHT AGAINST WALL.
2. LOCATE JUNCTION BOX NEXT TO RECEPTACLE FOR FUTURE SCOREBOARD.
3. DEVICES MOUNTED IN THE KICKPLATE OF THE TOP STEP.
4. COORDINATE WITH DETAIL ON SOUND AND ARCHITECTS DRAWINGS FOR MOUNTING LOCATION OF RECEPTACLES IN PULPIT.
5. INSTALL DUPLEX RECEPTACLE AT TELEPHONE BOARD AT 48" AFF.
6. LOCATE BOX SO DUPLEX RECEPTACLE CAN BE MOUNTED HORIZONTALLY IN HARDWOOD BASE.
7. LOCATE CONTROL CABLE BOX NEXT TO DUPLEX RECEPTACLE. SEE C/A303.
8. PROVIDE 120 VOLT POWER TO FIRE SPRINKLER SYSTEM EXTERIOR BELL/HORN STROBE. SEE H/FS501.
9. SCOREBOARD CONTROL CABLE SHALL BE COPPER, INSULATED, TWISTED PAIR, STRANDED, 22 GAUGE, SHIELDED, ONE RED CONDUCTOR, ONE BLACK CONDUCTOR, WITH OUTSIDE JACKET. COIL 2' OF CABLE IN JUNCTION BOX AND PROVIDE BLANK COVER PLATE.
10. SPLIT WIRE SO UPPER HALF OF RECEPTACLE IS CONTROLLED BY LIGHT SWITCH AND LOWER HALF IS UNSWITCHED ON SAME CIRCUIT.
11. STUB CONDUIT INTO DOOR HEAD FRAME FOR INSTALLATION OF ACCESS CONTROL SYSTEM WIRING. RUN CONDUIT TO ACCESSIBLE LOCATION IN UPPER MECHANICAL SPACE AND TERMINATE IN BOX LABELED 'ACCESS CONTROL'.
12. PROVIDE A 4" SQUARE 2-1/8" DEEP BOX FOR AUTOMATIC DOOR ACTIVATING SWITCH FURNISHED BY OTHERS. LEAVE EXTRA CONDUCTOR LENGTH FOR CONNECTION.
13. AUTOMATIC DOOR OPERATOR FURNISHED BY OTHERS. COORDINATE CONDUIT AND CONDUCTOR LENGTHS AND ROUTING FOR COMPLETE, CONCEALED INSTALLATION.
14. CIRCUIT EXHAUST FAN WITH LIGHTS IN ROOM AND CONTROL WITH INTERVAL TIMER CONTROL.
15. COORDINATE WITH ARCHITECTS DRAWINGS MOUNT RECEPTACLE ON THE VERTICAL WALL OF THE RECESSED ORGAN BOX. REFER TO 1/A402.
16. (2) 1" CONDUITS FROM JUNCTION BOX TO UPPER SHELF IN ORGAN SPEAKER CHAMBER.
17. SEPARATE DEDICATED #6 GROUND. COORDINATE WITH TELECOMMUNICATIONS GROUND BUS BAR.
18. COORDINATE LOCATION OF DEVICES WITH DIVISION 27 PRIOR TO ROUGH-IN.
19. REFER TO J/A422 FOR MOUNTING OF DUPLEX RECEPTACLE AND DATA OUTLET ON SIDE OF PULPIT.
20. CIRCUIT EXHAUST FAN WITH THE ROOM LIGHTS AND CONTROL WITH OCCUPANCY SENSOR IN ROOM.
21. CIRCUIT EXHAUST FAN WITH LIGHTS IN ROOM AND CONTROL WITH MANUAL TIMER SWITCH.
22. CONNECT SO FONT LIGHTS AND FAR ARE PROTECTED BY THIS GFCI RECEPTACLE.
23. BOND ALL METAL PARTS OF FONT INCLUDING BUT NOT NECESSARILY LIMITED TO METAL HANDRAIL PER THE NEC ARTICLE 680
24. LINE VOLTAGE THERMOSTAT PROVIDED BY DIVISION 23 AND INSTALLED BY DIVISION 26.
25. SEE ET101 FOR FLOOR BOX LOCATION AND ET601 FOR TYPE.
26. HOUSEKEEPING PAD SHOWN IS FOR BIDDING ONLY. THE ELECTRICAL CONTRACTOR SHALL PROVIDE HOUSEKEEPING PAD SIZED FOR EQUIPMENT SUPPLIED ON PROJECT. HOUSEKEEPING PAD TO HAVE A MINIMUM OF 6" OUTSIDE EQUIPMENT FOOTPRINT AND A MINIMUM THICKNESS OF 4".
27. CIRCUIT EXHAUST FAN WITH LIGHTS IN ROOM AND CONTROL WITH LINE VOLTAGE THERMOSTAT.
28. DISCONNECT FOR WALL HEATER IS PROVIDED BY THE MECHANICAL CONTRACTOR WITH CONNECTIONS BY THE ELECTRICAL CONTRACTOR.

GENERAL NOTES

1. SEE ME AND TE SHEETS FOR REQUIRED RACEWAY AND BOXES FOR TEMPERATURE CONTROL, TELEPHONE, DATA, SOUND, VIDEO, SATELLITE, AND TV SYSTEMS.

Architect / Engineer:
BOTT PANTONE ARCHITECTS
620 24TH STREET
OGDEN, UTAH 84401
BPARCHITECTS.NET
P 801.394.3033
F 801.394.3054

Stamp:
LICENSED PROFESSIONAL ENGINEER
No. 291818
KENNETH D. PANTONE
STATE OF UTAH

NIBLEY 12 & MENDON UTAH STAKE CENTER

APPROX. 1585 W. 3200 S.
NIBLEY, UTAH

Project for:
THE CHURCH OF JESUS CHRIST OF LATTER-DAY SAINTS

Mark	Date (mm/yy)	Description
1	30-OCT-18	BID SET

Project Number: 1770
Plan Series: HET-SDS-09-07
Property Number: 5002240-17-010201

Sheet Title: MAIN FLOOR POWER PLAN

Sheet: E111

HSDS-E111.dwg - 10/22/2018 - 1:47 PM

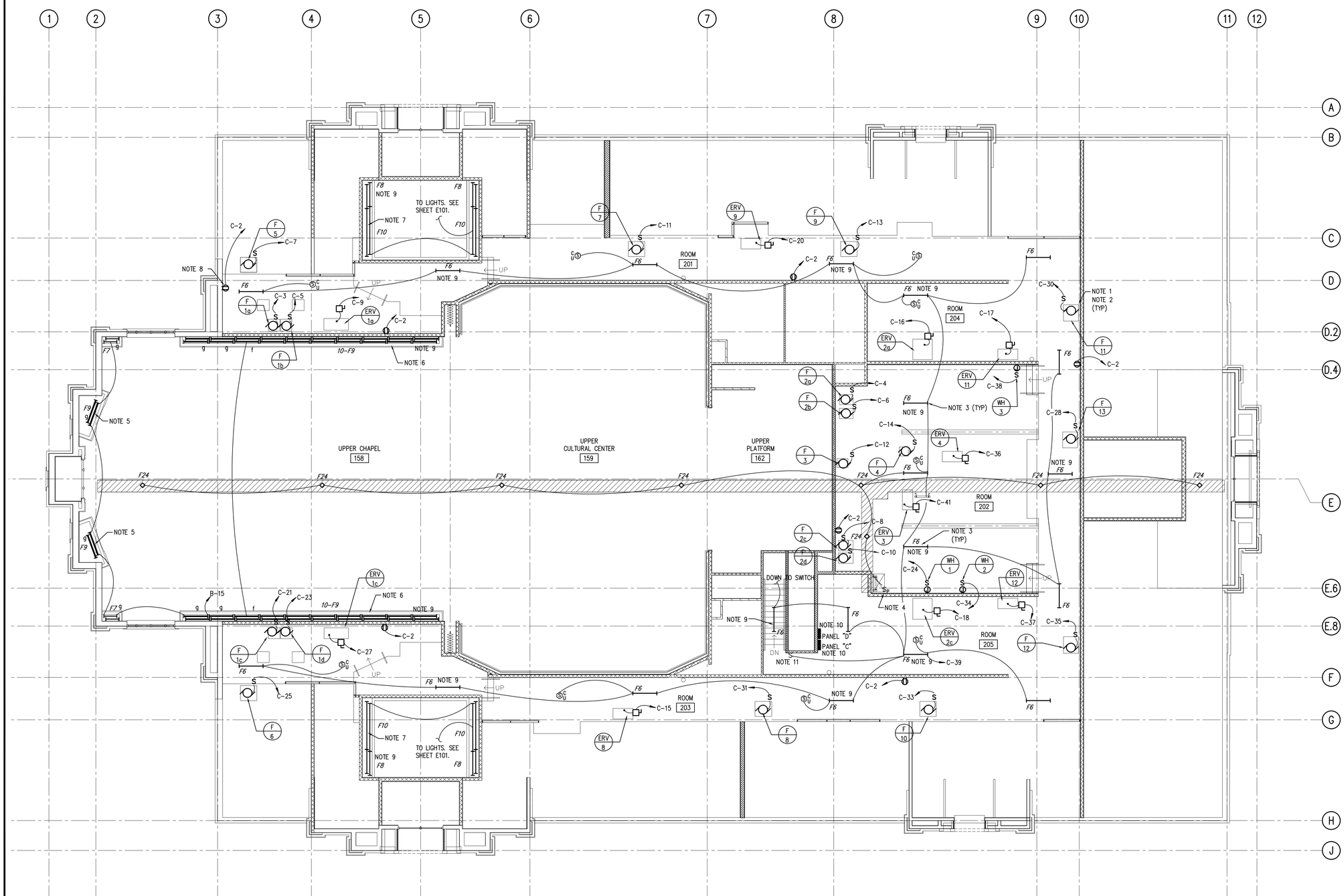

1 EQUIPMENT PLATFORM POWER AND LIGHTING PLAN
1/8" = 1'-0"

NORTH

NOTES

1. VERIFY MECHANICAL EQUIPMENT AND LOCATIONS WITH MECHANICAL DRAWINGS.
2. REFER TO EQUIPMENT SCHEDULE ON SHEET E601 FOR MECHANICAL EQUIPMENT FEEDER INFORMATION.
3. COORDINATE LIGHT FIXTURE LOCATIONS IN MECHANICAL EQUIPMENT AREAS. CHAIN SUSPEND FIXTURES AS NECESSARY FOR UNOBSTRUCTED ILLUMINATION.
4. MOUNT PILOT SWITCH AT THE BOTTOM OF ACCESS LADDER TO CATWALK.
5. SEE A/A403 AND B/A403 FOR MOUNTING OF LIGHTING FIXTURES.
6. SEE B/A152 FOR MOUNTING OF COVE LIGHT FIXTURES.
7. SEE C/A152 FOR MOUNTING OF COVE LIGHT FIXTURES.
8. COORDINATE LOCATION WITH EQUIPMENT AND PLUMBING.
9. FURNISH AND INSTALL A 90 MINUTE EMERGENCY BATTERY PACK IN THE INDICATED FIXTURES. PROVIDE AN UNSWITCHED CIRCUIT LEG FOR MONITORING AND BATTERY CHARGING. REFER TO SPECIFICATION FOR MORE REQUIREMENTS.
10. ELECTRICAL PANEL TO BE SURFACE MOUNTED. DO NOT RECESS IN WALL.
11. MOMENTARY CONTACT SWITCH. SEE SHEET E603.

GENERAL NOTES:

1. SEE ME AND ET SHEETS FOR REQUIRED RACEWAY AND BOX ROUGH-IN FOR TEMPERATURE CONTROLS, TELEPHONE, DATA, SATELLITE, AND TV SYSTEMS.

Architect / Engineer:
BOTT PANTONE ARCHITECTS
620 24TH STREET
OGDEN, UT 84401
BP-ARCHITECTS.NET
P 801.394.3033
F 801.394.9064

Stamp:
LICENSED PROFESSIONAL ENGINEER
No. 271886
KENNETH D. HARNER
STATE OF UTAH

NIBLEY 12 & MENDON UTAH STAKE CENTER

APPROX. 1585 W. 3200 S.
NIBLEY, UTAH

Project for:
THE CHURCH OF JESUS CHRIST OF LATTER-DAY SAINTS

Mark	Date (D-M-Y)	Description
-	30-OCT-18	BID SET

Project Number: 1770
Plan Series: HET-SDS-09-07
Property Number: 5002240-17-010201

Sheet Title:
EQUIPMENT PLATFORM POWER AND LIGHTING PLAN (STANDARD)

Sheet:
E112

HSDS-E112.dwg - 10/22/2018 - 1:47 PM

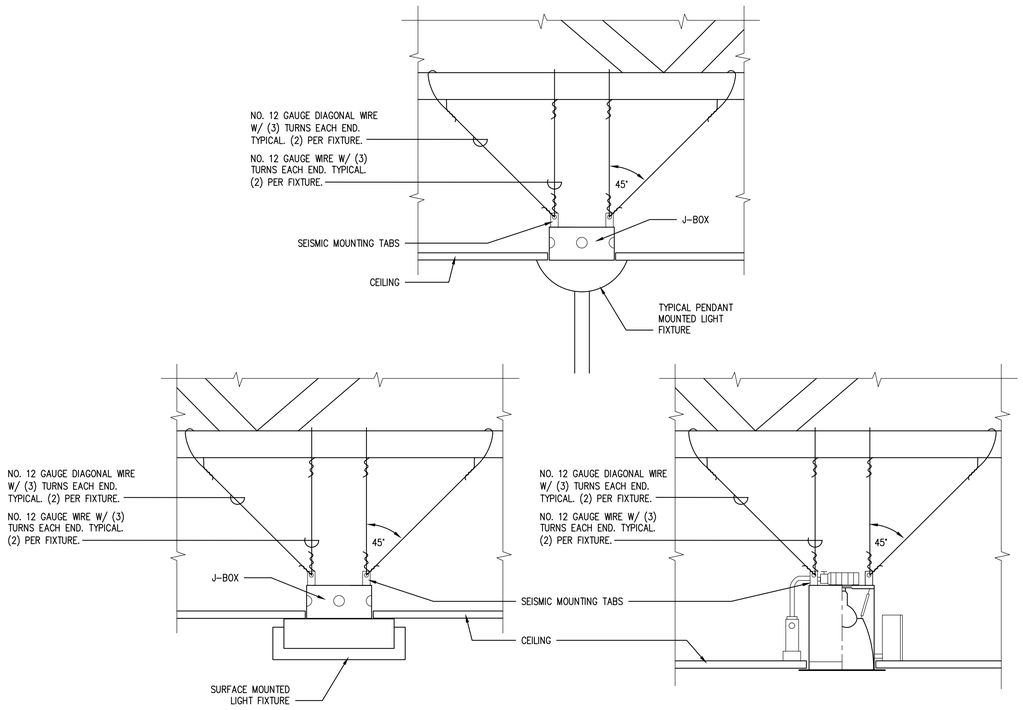

5 TYPICAL LIGHT FIXTURE SEISMIC BRACING
NOT TO SCALE

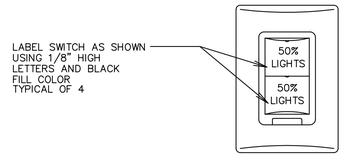

3 CULTURAL CENTER LIGHT SWITCH COVER PLATE DETAIL
NOT TO SCALE

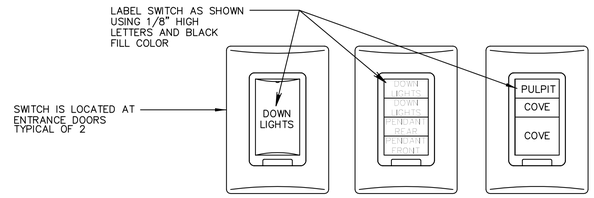

2 CHAPEL LIGHT SWITCH COVER PLATE DETAIL
NOT TO SCALE

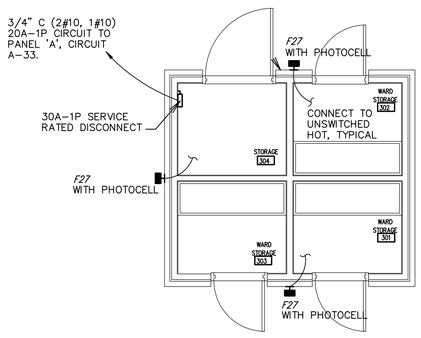

6 STORAGE BUILDING ELECTRICAL PLAN
NOT TO SCALE

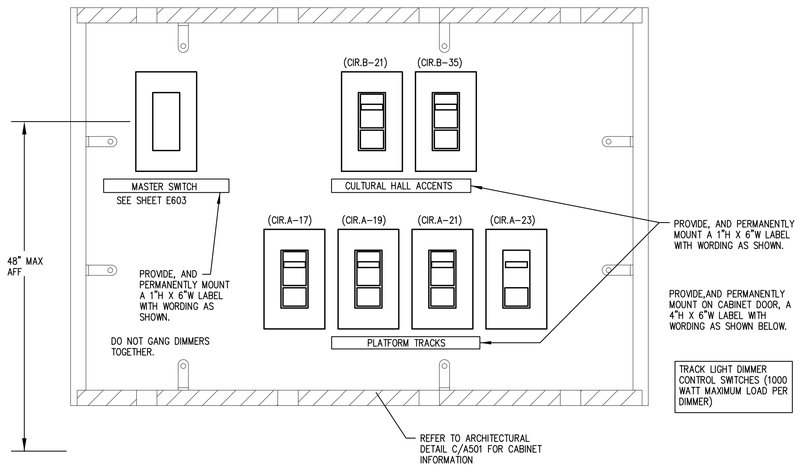

4 DIMMER SWITCH DETAIL
NOT TO SCALE

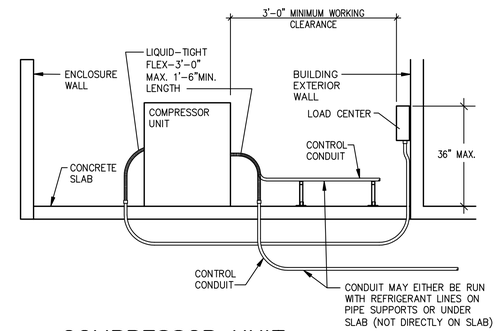

1 COMPRESSOR UNIT CONDUIT DETAIL
NOT TO SCALE

Architect / Engineer:
BOTT PANTONE ARCHITECTS
620 24TH STREET
OGDEN, UT 84401
BP-ARCHITECTS.NET
P 801.394.3033
F 801.394.9064

Stamp:
LICENSED PROFESSIONAL ENGINEER
No. 271886
KENNETH D. GARNER
STATE OF UTAH

NIBLEY 12 & MENDON UTAH STAKE CENTER
APPROX. 1585 W. 3200 S.
NIBLEY, UTAH

Project for:
THE CHURCH OF JESUS CHRIST OF LATTER-DAY SAINTS

Mark	Date (D-M-Y)	Description
-	30-OCT-18	BID SET

Project Number: 1770
Plan Series: HET-SDS-09-07
Property Number: 5002240-17-010201

Sheet Title: ELECTRICAL DETAILS

Sheet: E501

HSDS-E501.dwg - 10/22/2018 - 1:48 PM

EQUIPMENT SCHEDULE

SYM	DESCRIPTION	CIRCUIT	FEEDER	VOLTS/Ø	DISCONNECT	STARTER	HP/WATTS	FLA	MCA
CU 1a	COMPRESSOR UNIT COOLING	LC2-1	1/2" C 2 #10	208/1	50A-2P* CIRCUIT BREAKER	INCLUDED	-		31.9
CU 1b	COMPRESSOR UNIT COOLING	LC2-5	1/2" C 2 #10	208/1	50A-2P* CIRCUIT BREAKER	INCLUDED	-		31.9
CU 1c	COMPRESSOR UNIT COOLING	LC4-1	1/2" C 2 #10	208/1	50A-2P* CIRCUIT BREAKER	INCLUDED	-		31.9
CU 1d	COMPRESSOR UNIT COOLING	LC4-5	1/2" C 2 #10	208/1	50A-2P* CIRCUIT BREAKER	INCLUDED	-		31.9
CU 2a	COMPRESSOR UNIT COOLING	LC1-9	1/2" C 2 #10	208/1	45A-2P* CIRCUIT BREAKER	INCLUDED	-		28.1
CU 2b	COMPRESSOR UNIT COOLING	LC1-10	1/2" C 2 #10	208/1	45A-2P* CIRCUIT BREAKER	INCLUDED	-		28.1
CU 2c	COMPRESSOR UNIT COOLING	LC3-10	1/2" C 2 #10	208/1	45A-2P* CIRCUIT BREAKER	INCLUDED	-		28.1
CU 2d	COMPRESSOR UNIT COOLING	LC3-9	1/2" C 2 #10	208/1	45A-2P* CIRCUIT BREAKER	INCLUDED	-		28.1
CU 3	COMPRESSOR UNIT COOLING	LC3-6	1/2" C 2 #10	208/1	35A-2P* CIRCUIT BREAKER	INCLUDED	-		22
CU 4	COMPRESSOR UNIT COOLING	LC1-6	1/2" C 2 #10	208/1	50A-2P* CIRCUIT BREAKER	INCLUDED	-		31.9
CU 5	COMPRESSOR UNIT COOLING	LC2-2	1/2" C 2 #10	208/1	45A-2P* CIRCUIT BREAKER	INCLUDED	-		28.1
CU 6	COMPRESSOR UNIT COOLING	LC4-2	1/2" C 2 #10	208/1	45A-2P* CIRCUIT BREAKER	INCLUDED	-		28.1
CU 7	COMPRESSOR UNIT COOLING	LC1-1	1/2" C 2 #10	208/1	35A-2P* CIRCUIT BREAKER	INCLUDED	-		22
CU 8	COMPRESSOR UNIT COOLING	LC3-1	1/2" C 2 #10	208/1	50A-2P* CIRCUIT BREAKER	INCLUDED	-		31.9
CU 9	COMPRESSOR UNIT COOLING	LC1-5	1/2" C 2 #10	208/1	45A-2P* CIRCUIT BREAKER	INCLUDED	-		28.1
CU 10	COMPRESSOR UNIT COOLING	LC3-5	1/2" C 2 #10	208/1	30A-2P* CIRCUIT BREAKER	INCLUDED	-		18.7
CU 11	COMPRESSOR UNIT COOLING	LC1-2	1/2" C 2 #10	208/1	50A-2P* CIRCUIT BREAKER	INCLUDED	-		31.9
CU 12	COMPRESSOR UNIT COOLING	LC3-2	1/2" C 2 #12	208/1	50A-2P* CIRCUIT BREAKER	INCLUDED	-		31.9
CU 13	COMPRESSOR UNIT COOLING	LC1-14	1/2" C 2 #10	208/1	35A-2P* CIRCUIT BREAKER	INCLUDED	-		22
EH 1	ELECTRIC HEATER	B-24	2 #12	208/1	-	-	2200 W		
ERV 1a	ENERGY RECOVERY VENTILATOR	C-9	2 #10	120/1	30AS/25AF-1P*	INCLUDED	-		19.4
ERV 1c	ENERGY RECOVERY VENTILATOR	C-27	2 #10	120/1	30AS/25AF-1P*	INCLUDED	-		19.4
ERV 2a	ENERGY RECOVERY VENTILATOR	C-16	2 #6	120/1	60AS/45AF-1P*	INCLUDED	-		36.5
ERV 2c	ENERGY RECOVERY VENTILATOR	C-18	2 #6	120/1	60AS/45AF-1P*	INCLUDED	-		36.5
ERV 3	ENERGY RECOVERY VENTILATOR	C-41	2 #10	120/1	30AS/25AF-1P*	INCLUDED	-		19.4
ERV 4	ENERGY RECOVERY VENTILATOR	C-36	2 #10	120/1	30AS/25AF-1P*	INCLUDED	-		19.4
ERV 8	ENERGY RECOVERY VENTILATOR	C-15	2 #10	120/1	30AS/25AF-1P*	INCLUDED	-		19.4
ERV 9	ENERGY RECOVERY VENTILATOR	C-20	2 #10	120/1	30AS/25AF-1P*	INCLUDED	-		19.4
ERV 11	ENERGY RECOVERY VENTILATOR	C-17	2 #10	120/1	30AS/25AF-1P*	INCLUDED	-		19.4
ERV 12	ENERGY RECOVERY VENTILATOR	C-37	2 #10	120/1	30AS/25AF-1P*	INCLUDED	-		19.4
F 1a	FAN UNIT	C-3	2 #12	120/1	SINGLE POLE SWITCH	INCLUDED	1/2 HP	9.8	
F 1b	FAN UNIT	C-5	2 #12	120/1	SINGLE POLE SWITCH	INCLUDED	1/2 HP	9.8	
F 1c	FAN UNIT	C-21	2 #12	120/1	SINGLE POLE SWITCH	INCLUDED	1/2 HP	9.8	
F 1d	FAN UNIT	C-23	2 #12	120/1	SINGLE POLE SWITCH	INCLUDED	1/2 HP	9.8	
F 2a	FAN UNIT	C-4	2 #12	120/1	SINGLE POLE SWITCH	INCLUDED	1/2 HP	9.8	
F 2b	FAN UNIT	C-6	2 #12	120/1	SINGLE POLE SWITCH	INCLUDED	1/2 HP	9.8	
F 2c	FAN UNIT	C-8	2 #12	120/1	SINGLE POLE SWITCH	INCLUDED	1/2 HP	9.8	
F 2d	FAN UNIT	C-10	2 #12	120/1	SINGLE POLE SWITCH	INCLUDED	1/2 HP	9.8	
F 3	FAN UNIT	C-12	2 #10	120/1	SINGLE POLE SWITCH	INCLUDED	3/4 HP	13.8	
F 4	FAN UNIT	C-14	2 #10	120/1	SINGLE POLE SWITCH	INCLUDED	3/4 HP	13.8	
F 5	FAN UNIT	C-7	2 #12	120/1	SINGLE POLE SWITCH	INCLUDED	1/2 HP	9.8	
F 6	FAN UNIT	C-25	2 #12	120/1	SINGLE POLE SWITCH	INCLUDED	1/2 HP	9.8	
F 7	FAN UNIT	C-11	2 #12	120/1	SINGLE POLE SWITCH	INCLUDED	1/3 HP	7.2	
F 8	FAN UNIT	C-31	2 #10	120/1	SINGLE POLE SWITCH	INCLUDED	3/4 HP	13.8	
F 9	FAN UNIT	C-13	2 #12	120/1	SINGLE POLE SWITCH	INCLUDED	3/4 HP	13.8	
F 10	FAN UNIT	C-33	2 #12	120/1	SINGLE POLE SWITCH	INCLUDED	1/3 HP	7.2	
F 11	FAN UNIT	C-30	2 #10	120/1	SINGLE POLE SWITCH	INCLUDED	3/4 HP	13.8	
F 12	FAN UNIT	C-35	2 #10	120/1	SINGLE POLE SWITCH	INCLUDED	3/4 HP	13.8	
F 13	FAN UNIT	C-28	2 #12	120/1	SINGLE POLE SWITCH	INCLUDED	1/3 HP	7.2	
WH 1	WATER HEATER	C-24	2 #12	120/1	SINGLE POLE SWITCH	-	180 W	1.5	
WH 2	WATER HEATER (1)	C-1	2 #12	120/1	SINGLE POLE SWITCH	-	708 W	6	

* FINAL BREAKER/FUSE SIZE SHALL BE DETERMINED BY MANUFACTURERS RECOMMENDATION FOR ACTUAL EQUIPMENT INSTALLED

1. TIE THE ASSOCIATED RE-CIRCULATING PUMP TO THE HEATER CIRCUIT THROUGH A THERMAL SWITCH.

EXHAUST FAN SCHEDULE

SYM	DESCRIPTION	CIRCUIT	FEEDER	VOLTS/Ø	DISCONNECT	STARTER	HP/WATTS	FLA
EF 1	EXHAUST FAN	A-25	2 #12	120/1	-	-	420 W	3.5
EF 2	EXHAUST FAN	B-33	2 #12	120/1	-	-	420 W	3.5
EF 3	EXHAUST FAN	A-13	2 #12	120/1	-	-	81 W	0.7
EF 4	EXHAUST FAN	B-1	2 #12	120/1	-	-	100 W	0.8
EF 5	EXHAUST FAN	A-9	2 #12	120/1	-	-	100 W	0.8
EF 6	EXHAUST FAN	A-13	2 #12	120/1	-	-	166 W	1.4
EF 7	EXHAUST FAN	B-29	2 #12	120/1	-	-	81 W	0.7
EF 8	EXHAUST FAN	A-9	2 #12	120/1	-	-	130 W	1.1
EF 9	EXHAUST FAN	A-35	2 #12	120/1	-	-	166 W	1.4
EF 10	EXHAUST FAN	B-1	2 #12	120/1	-	-	81 W	0.7

Electrical Symbol Legend

$	Light switch
$3	Three way light switch
$4	Four way light switch
$P	Pilot Switch
GFCI	Duplex 20 A GFCI protected receptacle
	Duplex 20 A receptacle
	Special purpose outlet. Provide per equipment manufacturer requirements.
WP GFCI	Duplex 20 A weather proof receptacle. Provide a GFCI outlet and while in-use cover.
EWC GFCI	EWC GFCI protected receptacle
	Switched Duplex Receptacle
$F	Motor control switch with thermal overload
J	4" x 4" x 2-1/8" deep flush j-box with mudring to match application
	Electric Motor
X	Reference note callout
MT	Dual technology ceiling mounted occupancy sensor
MU	Ultrasonic ceiling mounted occupancy sensor
MU	PIR ceiling mounted occupancy sensor
M	PIR wall mounted occupancy sensor with manual ON/OFF switch
MDT	Dual technology wall mounted occupancy sensor
$DT	Digital Time Switch

Architect / Engineer:
BOTT PANTONE ARCHITECTS
620 24TH STREET
OGDEN, UTAH 84401
BPARCHITECTS.NET
P 801.394.3033
F 801.394.3054

Stamp:
LICENSED PROFESSIONAL ENGINEER
No. 291884
KENNETH D. MARKER
STATE OF UTAH

NIBLEY 12 & MENDON UTAH STAKE CENTER

APPROX. 1585 W. 3200 S.
NIBLEY, UTAH

Project for:
THE CHURCH OF JESUS CHRIST OF LATTER-DAY SAINTS

Mark	Date (DMMYY)	Description
	30-OCT-18	BID SET

Project Number: 1770
Plan Series: HET-SDS-09-07
Property Number: 5002240-17-010201

Sheet Title: SCHEDULES (STANDARD)

Sheet: E601

HSDS-E601.dwg - 10/22/2018 - 1:48 PM

LOAD TABULATION

CIRCUIT	DESCRIPTION	LOAD AMPS ØA	ØB	ØC	N
M-1	PANEL 'B'	70	80	78	10
M-2	PANEL 'A'	130	114	129	16
M-3	PANEL 'C'	137	163	177	40
M-4	LOAD CENTER 'LC1'	118	115	101	17
M-5	LOAD CENTER 'LC3'	88	104	81	23
M-6	LOAD CENTER 'LC2'	80	52	28	52
M-7	LOAD CENTER 'LC4'	94	66	41	53
M-8	SPACE				
M-9	SPACE				
M-10	PANEL 'D'	50	50	38	12
	TOTAL	767	744	673	223

LOAD CENTER 'WELL ASSEMBLY'

AMPS 50 MAIN BREAKER VOLTS 120/208 PHASE 3 MOUNTING SURFACE LOCATION EXTERIOR

BRKR A	BRKR P	DESCRIPTION	CIRCUIT VA	CIRCUIT NO	PHASE LOADS A	B	C	CIRCUIT NO	CIRCUIT VA	DESCRIPTION	BRKR A	BRKR P
20	3	MYERS PUMP	1609	1	1609			2		SPACE		
–	–	–	1609	3		1609		4		SPACE		
–	–	–	1609	5			1609	6		SPACE		
20	1	AMIAD FILTER	120	7	120			8		SPACE		
20	1	SPARE		9				10		SPACE		
20	1	SPARE		11				12		SPACE		
					1729	1609	1609					

TOTAL LOAD 4,947 VA
13.8 AMPS

LOAD CENTER 'LC1'

AMPS 125 MAIN LUGS ONLY VOLTS 120/208 PHASE 3 MOUNTING SURFACE LOCATION EXTERIOR

BRKR A	BRKR P	DESCRIPTION	CIRCUIT VA	CIRCUIT NO	PHASE LOADS A	B	C	CIRCUIT NO	CIRCUIT VA	DESCRIPTION	BRKR A	BRKR P
35	2	COMPRESSOR UNIT CU-7	2288	1	5606			2	3318	COMPRESSOR UNIT CU-11	50	2
–	–	–	2288	3		5606		4	3318	–	–	–
45	2	COMPRESSOR UNIT CU-9	2922	5			6240	6	3318	COMPRESSOR UNIT CU-4	50	2
–	–	–	2922	7	6240			8	3318	–	–	–
45	2	COMPRESSOR UNIT CU-2a	2922	9		5844		10	2922	COMPRESSOR UNIT CU-2b	45	2
–	–	–	2922	11			5844	12	2922	–	–	–
20	1	SPARE		13	2288			14	2288	COMPRESSOR UNIT CU-13	35	2
20	1	SPARE		15		2288		16	2288			
					14134	13738	12084					

TOTAL LOAD 39,956 VA
111 AMPS

LOAD CENTER 'LC2'

AMPS 125 MAIN LUGS ONLY VOLTS 120/208 PHASE 3 MOUNTING SURFACE LOCATION EXTERIOR

BRKR A	BRKR P	DESCRIPTION	CIRCUIT VA	CIRCUIT NO	PHASE LOADS A	B	C	CIRCUIT NO	CIRCUIT VA	DESCRIPTION	BRKR A	BRKR P
50	2	COMPRESSOR UNIT CU-1a	3318	1	6240			2	2922	COMPRESSOR CU-5	45	2
–	–	–	3318	3		6240		4	2922	–	–	–
50	2	COMPRESSOR UNIT CU-1b	3318	5			3318	6		SPACE		
–	–	–	3318	7	3318			8		SPACE		
20	1	SPARE		9				10		SPACE		
20	1	SPARE		11				12		SPACE		
					9558	6240	3318					

TOTAL LOAD 19,116 VA
53 AMPS

LOAD CENTER 'LC3'

AMPS 125 MAIN LUGS ONLY VOLTS 120/208 PHASE 3 MOUNTING SURFACE LOCATION EXTERIOR

BRKR A	BRKR P	DESCRIPTION	CIRCUIT VA	CIRCUIT NO	PHASE LOADS A	B	C	CIRCUIT NO	CIRCUIT VA	DESCRIPTION	BRKR A	BRKR P
50	2	COMPRESSOR UNIT CU-8	3318	1	6636			2	3318	COMPRESSOR UNIT CU-12	50	2
–	–	–	3318	3		6636		4	3318	–	–	–
30	2	COMPRESSOR UNIT CU-10	1945	5			3933	6	2288	COMPRESSOR UNIT CU-3	35	2
–	–	–	1945	7	3933			8	2288	–	–	–
45	2	COMPRESSOR UNIT CU-2d	2922	9		5844		10	2922	COMPRESSOR UNIT CU-2c	45	2
–	–	–	2922	11			5844	12	2922	–	–	–
20	1	SPARE		13				14		SPACE		
20	1	SPARE		15				16		SPACE		
		SPACE		17				18		SPACE		
		SPACE		19				20		SPACE		
		SPACE		21				22		SPACE		
		SPACE		23				24		SPACE		
					10569	12480	9777					

TOTAL LOAD 32,826 VA
91 AMPS

LOAD CENTER 'LC4'

AMPS 125 MAIN LUGS ONLY VOLTS 120/208 PHASE 3 MOUNTING SURFACE LOCATION EXTERIOR

BRKR A	BRKR P	DESCRIPTION	CIRCUIT VA	CIRCUIT NO	PHASE LOADS A	B	C	CIRCUIT NO	CIRCUIT VA	DESCRIPTION	BRKR A	BRKR P
50	2	COMPRESSOR UNIT CU-1c	3318	1	6240			2	2922	COMPRESSOR UNIT CU-6	45	2
–	–	–	3318	3		6240		4	2922	–	–	–
50	2	COMPRESSOR UNIT CU-1d	3318	5			3318	6		SPACE		
–	–	–	3318	7	5047			8	1729	LOAD CENTER 'WELL ASSEMBLY'	50	3
20	1	SPARE		9		1609		10	1609	–	–	–
20	1	SPARE		11			1609	12	1609	–	–	–
					11,287	7849	4927					

TOTAL LOAD 24,063 VA
67 AMPS

PANEL 'D'

AMPS 125 MAIN LUGS ONLY VOLTS 120/208 PHASE 3 MOUNTING SURFACE LOCATION MECH ACCESS 204

BRKR A	BRKR P	DESCRIPTION	CIRCUIT VA	CIRCUIT NO	PHASE LOADS A	B	C	CIRCUIT NO	CIRCUIT VA	DESCRIPTION	BRKR A	BRKR P
30	2	ROOF HEAT TAPE	1500	1	3000			2	1500	ROOF HEAT TAPE	30	2
–	–	–	1500	3		3000		4	1500	–	–	–
30	2	ROOF HEAT TAPE	1500	5			3000	6	1500	ROOF HEAT TAPE	30	2
–	–	–	1500	7	3000			8	1500	–	–	–
30	2	SPARE		9		1500		10	1500	ROOF HEAT TAPE	30	2
–	–	–		11			1500	12	1500	–	–	–
30	2	SPARE		13				14	2288	SPACE		
–	–	–		15				16	2288	SPACE		
					6000	6000	4500					

TOTAL LOAD 16,500 VA
46 AMPS

PANEL 'A'

AMPS 225 MAIN LUGS ONLY VOLTS 120/208 PHASE 3 MOUNTING FLUSH LOCATION PLATFORM 162

BRKR A	BRKR P	DESCRIPTION	CIRCUIT VA	CIRCUIT NO	PHASE LOADS A	B	C	CIRCUIT NO	CIRCUIT VA	DESCRIPTION	BRKR A	BRKR P
20	1	RCPT-MATRL CNTR	1200	1	2100			2	900	RCPT-ROOM, BISHOP	20	1
20	1	RCPT-MATRL CNTR	540	3		1620		4	1080	RCPT-BISHOP,CLERK	20	1
20	1	RCPT-MATRL CNTR	360	5			540	6	180	RCPT-FOYER	20	1
20	1	RCPT-ROOMS	900	7	1620			8	720	RCPT-VEST,CLERK	20	1
20	1	LTS-RM'S,BISHOP,VEST, EF-5, EF-8	1126	9		2206		10	1080	RCPT-BISHOP, MOTHERS	20	1
20	1	LTS-FOYER	383	11			1463	12	1080	RCPT-HALL,CULTURAL, ROOM	20	1
20	1	LTS-ROOMS,SERVING,MATRL CNTR, EF-3, EF-6	1143	13	1503			14	360	RCPT-CHAPEL	20	1
20	1	LTS-HALL	840	15		1020		16	180	RCPT-TECHNOLOGY	20	1
20	2	LTS-PLATFORM TRACK	750	17			930	18	180	RCPT-TECHNOLOGY	20	1
–	–	LTS-PLATFORM TRACK	750	19	930			20	180	RCPT-TECHNOLOGY	20	1
20	2	LTS-PLATFORM TRACK	750	21		1350		22	600	PROJECTION SCREEN	20	1
–	–	LTS-PLATFORM TRACK	750	23			930	24	180	RCPT-SERVING	20	1
20	1	LTS-ROOMS, RESTROOM, EF-1	888	25	2088			26	1200	RCPT-SERVING REFRIG	20	1
20	1	LTS-ROOM	608	27		968		28	360	RCPT-SERVING	20	1
20	1	RCPT-SCOREBOARD	180	29			5180	30	5000	RCPT-RANGE	50	2
20	1	RCPT-ROOM,PLATFORM,RESTRM	1080	31	6080			32	5000	–	–	–
20	1	STORAGE BUILDING	600	33		5600		34	5000	RCPT-RANGE	50	2
20	1	FONT RCPT, LTS, EF-9	514	35			5514	36	5000	–	–	–
20	1	RCPT-ROOMS	1080	37	1260			38	180	RCPT-SERVING AREA	20	1
20	1	RCPT, ROOMS	900	39		900		40		SPARE	20	1
20	1	LIGHTING CONTROL PANEL	960	41			960	42		SPARE	20	1
					15581	13664	15517					

TOTAL LOAD 44,762 VA
124 AMPS

PANEL 'B'

AMPS 225 MAIN LUGS ONLY VOLTS 120/208 PHASE 3 MOUNTING FLUSH LOCATION PLATFORM 162

BRKR A	BRKR P	DESCRIPTION	CIRCUIT VA	CIRCUIT NO	PHASE LOADS A	B	C	CIRCUIT NO	CIRCUIT VA	DESCRIPTION	BRKR A	BRKR P
20	1	LTS-RMS,BISHOP,CLERK, EF-4,EF-10	923	1	1823			2	900	RCPT-BISHOP,ROOM	20	1
20	1	LTS-FOYER	383	3		1463		4	1080	RCPT-CLERK	20	1
20	1	LTS-STAKE SUITE,ROOMS	1176	5			1356	6	180	RCPT-HIGH COUNCIL FLOOR	20	1
20	1	LTS-HALL	728	7	1988			8	1260	RCPT-CLERK,ROOM	20	1
20	1	LTS-CHAPEL	816	9		2076		10	1260	RCPT-PRESIDENT,RESTRM	20	1
20	1	LTS-ROSTRUM	424	11			1324	12	900	RCPT-HIGH COUNCIL	20	1
20	1	LTS-CHAPEL	180	13	720			14	540	RCPT-HALL,ROOM	20	1
20	1	LTS-CHAPEL COVE	1312	15		2392		16	1080	RCPT-CULTRAL CNTR,RESTRM, RM	20	1
20	1	LTS-CULTURAL CENTER	1344	17			2244	18	900	RCPT-CHAPEL	20	1
20	1	LTS-CULTURAL CENTER	896	19	1976			20	1080	RCPT-ROSTRUM	20	1
20	1	SPARE		21		600		22	600	AUTOMATIC DOOR OPENER	20	1
20	1	SPARE		23			1500	24	1500	ELECTRIC HEATER EH-1	20	2
20	1	LTS-FOYER	270	25	1770			26	1500	–	–	–
20	1	LTS-ROOM	608	27		1868		28	1260	RCPT-ROOMS	20	1
20	1	LTS-ROOM,PLATFORM, EF-7	1053	29			1653	30	600	FACP	20	1
20	1	SPARE		31				32		SPARE	20	1
20	1	LTS-ROOMS,RESTROOM, EF-2	1224	33		1224		34		SPARE	20	1
20	1	LTS-CULTURAL CENTER RECESSED	168	35			1248	36	1080	RCPT-ROOMS	20	1
20	1	LTS-CULTURAL CENTER RECESSED	168	37	168			38		SPARE		
20	1	SPARE		39				40		SPARE		
20	1	SPARE		41				42		SPARE		
					8445	9623	9325					

TOTAL LOAD 27,393 VA
76 AMPS

PANEL 'C'

AMPS 225 MAIN LUGS ONLY VOLTS 120/208 PHASE 3 MOUNTING SURFACE LOCATION MECH ACCESS 204

BRKR A	BRKR P	DESCRIPTION	CIRCUIT VA	CIRCUIT NO	PHASE LOADS A	B	C	CIRCUIT NO	CIRCUIT VA	DESCRIPTION	BRKR A	BRKR P
20	1	WATER HEATER WH 2	708	1	1968			2	1260	RCPT-EQ. PLATFORM	20	1
20	1	FAN UNIT F-1a	1176	3		2352		4	1176	FAN UNIT F-2a	20	1
20	1	FAN UNIT F-1b	1176	5			2352	6	1176	FAN UNIT F-2b	20	1
20	1	FAN UNIT F-5	1176	7	2352			8	1176	FAN UNIT F-2c	20	1
25	1	ENERGY RECOVERY VENT ERV-1a	2328	9		3504		10	1176	FAN UNIT F-2d	20	1
15	1	FAN UNIT F-7	864	11			2520	12	1656	FAN UNIT F-3	25	1
25	1	FAN UNIT F-9	1656	13	3312			14	1656	FAN UNIT F-4	25	1
25	1	ENERGY RECOVERY VENT ERV-8	2328	15		6708		16	4380	ENERGY RECOVERY VENT ERV-2a	45	1
25	1	ENERGY RECOVERY VENT ERV-11	2325	17			6708	18	4380	ENERGY RECOVERY VENT ERV-2c	45	1
20	1	PAVILION LIGHTING	800	19	3128			20	2328	ENERGY RECOVERY VENT ERV-9	25	1
20	1	FAN UNIT F-1c	1176	21		1376		22	200	PAVILION RECEPTACLES	20	1
20	1	FAN UNIT F-1d	1176	23			1356	24	180	WATER HEATER WH-1	20	1
20	1	FAN UNIT F-6	1176	25	1476			26	300	EXTERIOR LIGHTS	20	1
25	1	ENERGY RECOVERY VENT ERV-1c	2325	27		3189		28	864	FAN UNIT F-13	20	1
20	1	PAVILION RECEPTACLES	200	29			1856	30	1656	FAN UNIT F-11	25	1
25	1	FAN UNIT F-8	1656	31	1856			32	200	PAVILION RECEPTACLES	20	1
20	1	FAN UNIT F-10	864	33		1064		34	200	PAVILION RECEPTACLES	20	1
20	1	FAN UNIT F-12	1656	35			3984	36	2328	ENERGY RECOVERY VENT REV-4	25	1
25	1	ENERGY RECOVERY VENT ERV-12	2328	37	2328			38		SPARE	20	1
20	1	LTS-EQ. PLATFORM	1050	39		1380		40	330	PARKING LOT LIGHTING	20	2
25	1	ENERGY RECOVERY VENT ERV-3	2064	41			2394	42	330	–	–	–
					16420	19573	21170					

TOTAL LOAD 57163 VA
159 AMPS

Architect / Engineer:
BOTT PANTONE ARCHITECTS
620 24TH STREET
OGDEN, UT 84401
BP-ARCHITECTS.NET
P 801.394.3033
F 801.394.9064

Stamp:
LICENSED PROFESSIONAL ENGINEER No. 221886 KENNETH D. GARNER STATE OF UTAH

NIBLEY 12 & MENDON UTAH STAKE CENTER
APPROX. 1585 W. 3200 S.
NIBLEY, UTAH

Project for:
THE CHURCH OF JESUS CHRIST OF LATTER-DAY SAINTS

Mark	Date (D-M-Y)	Description
	30-OCT-18	BID SET

Project Number: 1770
Plan Series: HET-SDS-09-07
Property Number: 5002240-17-010201

Sheet Title: PANEL SCHEDULES (STANDARD)

Sheet: E602

HSDS-E602.dwg - 10/22/2018 - 1:48 PM

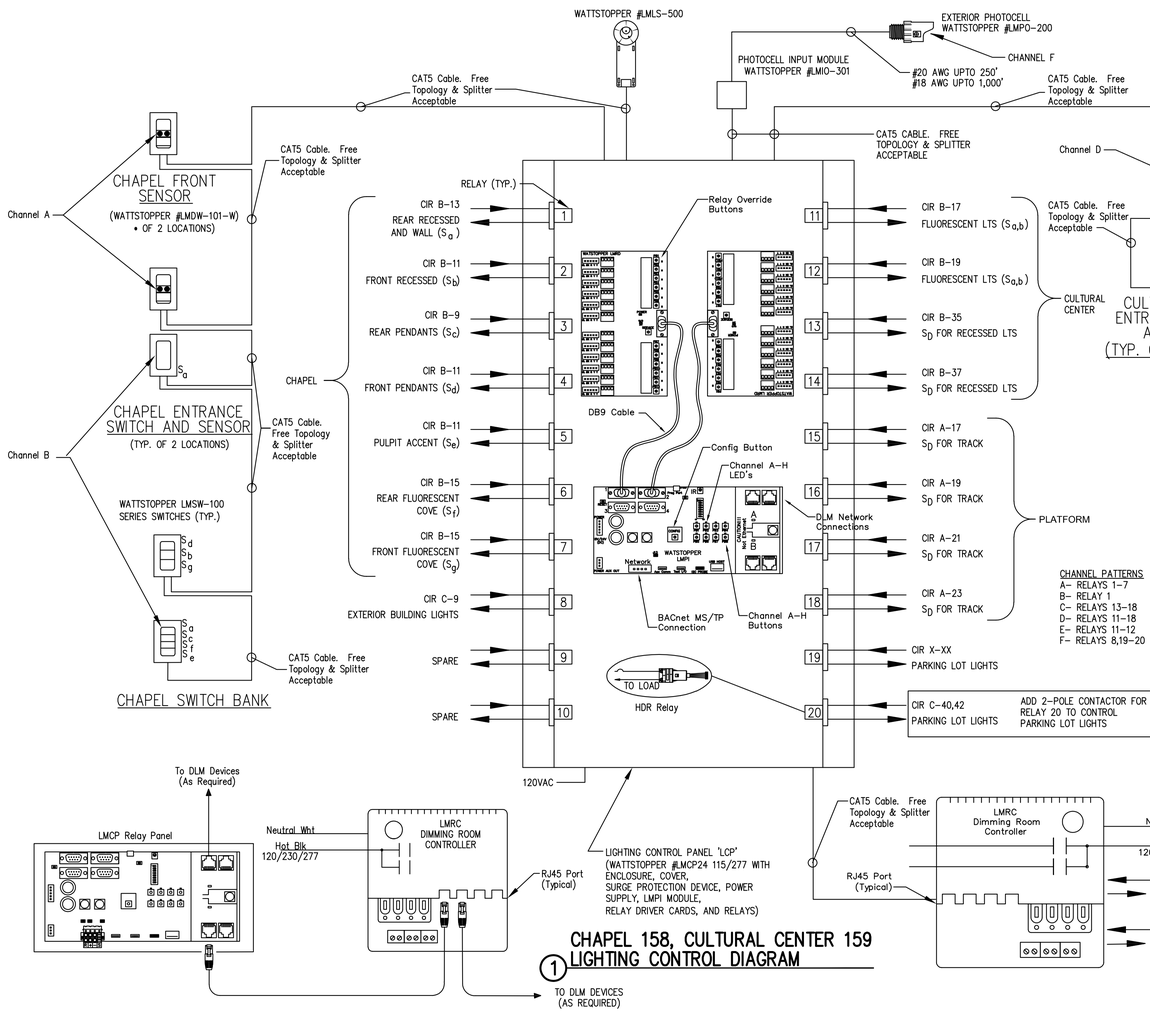

② CULTURAL CENTER DIMMER SWITCHES (IN CABINET)

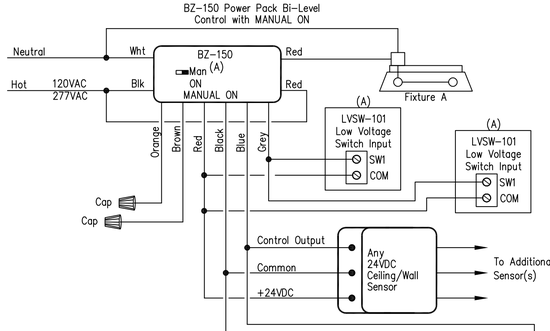

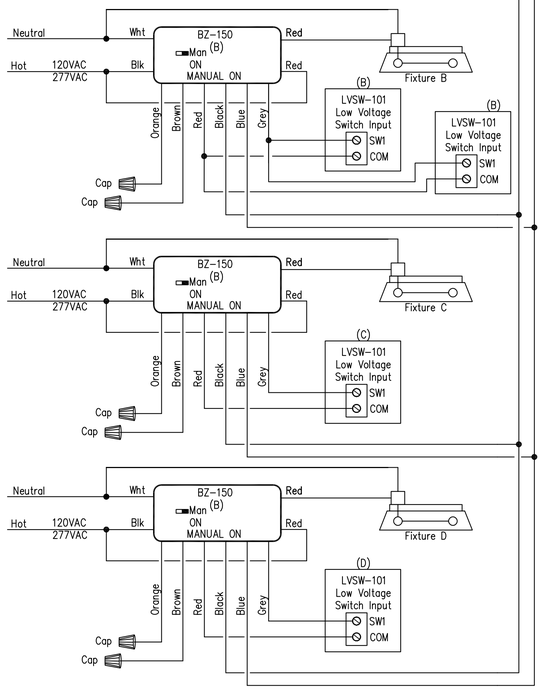

NOTE:
CONTRACTOR TO CONFIRM ALL WIRING, CONNECTIONS AND INSTALLATION WITH THE SUPPLIER PRIOR TO ANY INSTALLATION.

① CHAPEL 158, CULTURAL CENTER 159 LIGHTING CONTROL DIAGRAM

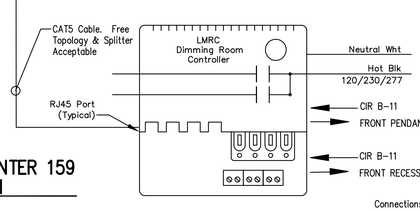

Connections To Room Controller For Dimming And Daylighting Purposes

③ LIGHTING CONTROL DIAGRAM

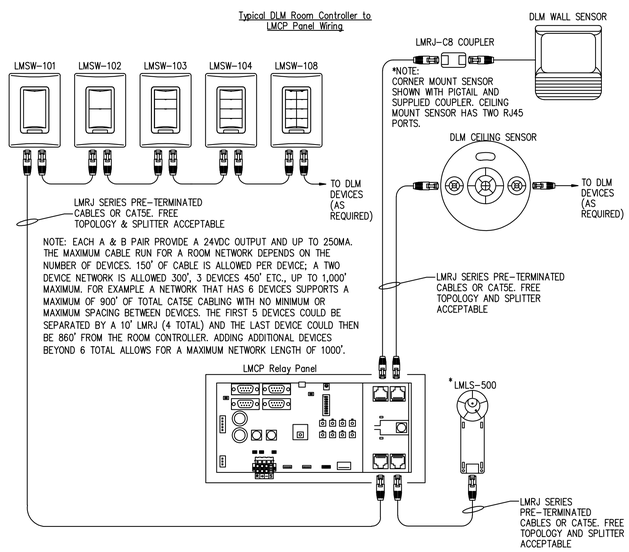

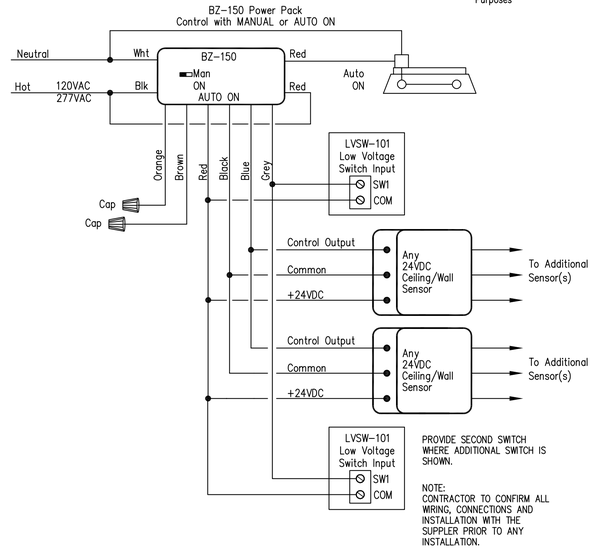

③ LIGHTING CONTROL DIAGRAM

④ ROOM 123 AND ROOM 131 LIGHTING CONTROL DIAGRAM

SEQUENCE OF OPERATIONS:

CHAPEL LIGHTING

1. WALL-MOUNTED SENSORS DETECT OCCUPANCY AS USER ENTERS.
2. USER MANUALLY OPERATES LOW-VOLTAGE SWITCH NEAR DOORWAY TO TURN ON SIDE RECESSED AND WALL LIGHTS.
3. SWITCH OPERATES ASSOCIATED RELAY IN LIGHTING CONTROL PANEL.
4. USER MOVES TO SWITCH BANK AT CHAPEL FRONT.
5. SWITCH BANK CONSISTS OF LOW-VOLTAGE SWITCHES WHICH CONTROL RELAYS FOR:
   - 5.1. WALL AND RECESSED LIGHTS-SWITCH (a)
   - 5.2. FRONT RECESSED LIGHTS-SWITCH (b)
   - 5.3. REAR PENDANT LIGHTS-SWITCH (c)
   - 5.4. FRONT PENDANT LIGHTS-SWITCH (d)
   - 5.5. PULPIT ACCENT LIGHTS-SWITCH (e)
   - 5.6. REAR FLUORESCENT COVE LIGHTS-SWITCH (f)
   - 5.7. FRONT FLUORESCENT COVE LIGHTS-SWITCH (g)
6. USER HAS MANUAL ON AND OFF CAPABILITY FOR ALL LIGHTS IN CHAPEL FROM SWITCH BANK.
7. USER CAN TURN LIGHTING OFF WITH MANUAL SWITCHES UPON LEAVING CHAPEL.
8. IF USER DOES NOT TURN LIGHTING OFF WHEN LEAVING, LIGHTING CONTROL PANEL WILL TURN IT OFF UTILIZING WALL-MOUNTED OCCUPANCY SENSOR SIGNALS.
9. LIGHTING CONTROL PANEL RESETS SO NEXT USER MUST MANUALLY OPERATE SWITCHES (INCLUDING DOORWAY SWITCHES)
10. THE DAYLIGHT SENSORS IN THE CHAPEL ROSTRUM TO MAINTAIN A MINIMUM ILLUMINATE OF 20 FOOT CANDLES. THE PANEL SHALL BE ABLE TO CONTROL CONTINUOUS DIMMING DALI BALLASTS.

CULTURAL CENTER FLUORESCENT LIGHTING

1. WALL-MOUNTED SENSORS DETECT OCCUPANCY AS USER ENTERS.
2. USER MANUALLY OPERATES FIRST LOW-VOLTAGE SWITCH (b) NEAREST DOORWAY TO TURN ON HALF LEVEL OF FLUORESCENT LIGHTING.
3. USER MANUALLY OPERATES SECOND LOW-VOLTAGE SWITCH (a) TO TURN ON OTHER HALF LEVEL OF FLUORESCENT LIGHTING, IF FULL LEVEL IS REQUIRED.
4. SWITCHES OPERATE RELAY IN LIGHTING CONTROL PANEL.
5. USER HAS MANUAL ON AND OFF CAPABILITY FOR ALL FLUORESCENT LIGHTS IN CULTURAL CENTER FROM ANY DOOR.
6. USER CAN TURN LIGHTING OFF WITH MANUAL SWITCHES UPON LEAVING CULTURAL CENTER.
7. IF USER DOES NOT TURN LIGHTING OFF WHEN LEAVING, LIGHTING CONTROL PANEL WILL TURN IT OFF UTILIZING WALL-MOUNTED OCCUPANCY SENSOR SIGNALS.
8. LIGHTING CONTROL PANEL RESETS SO NEXT USER MUST MANUALLY OPERATE DOORWAY SWITCHES.

CULTURAL CENTER RECESSED, ANTE-PROSCENIUM, AND PLATFORM LIGHTING

1. USER ENTERS CULTURAL CENTER AND MANUALLY OPERATES FLUORESCENT LIGHTING SWITCH NEAR DOORWAY (SEE SEQUENCE ABOVE).
2. USER MOVES TO DIMMER SWITCH CABINET.
3. USER MANUALLY OPERATES MASTER LOW-VOLTAGE SWITCH WHICH OPERATES RELAYS IN LIGHTING CONTROL PANEL THAT ENABLE LINE-VOLTAGE DIMMERS TO CONTROL THE RECESSED, ANTE-PROSCENIUM, AND PLATFORM TRACK LIGHTING.
4. USER CAN TURN OFF RECESSED, ANTE-PROSCENIUM, AND PLATFORM LIGHTING WITH THE MASTER SWITCH WHEN LEAVING CABINET LOCATION.
5. IF USER DOES NOT TURN LIGHTING OFF WHEN LEAVING, LIGHTING CONTROL PANEL WILL TURN MASTER SWITCH OFF UTILIZING THE WALL-MOUNTED OCCUPANCY SENSOR SIGNALS.
6. LIGHTING CONTROL PANEL RESETS SO NEXT USER MUST MANUALLY OPERATE MASTER SWITCH.

NOTES:

1.– THIS DRAWING IS A BASED ON A WATTSTOPPER DESIGN. THE SUCCESSFUL BIDDER SHALL PROVIDE ALL NECESSARY PARTS, SENSORS, SWITCHES, ETC. NECESSARY TO PROVIDE A SYSTEM THAT IS EQUIVALENT IN FUNCTIONALITY AS THE BASIS OF DESIGN.

2.– REFER TO ELECTRICAL SPECIFICATIONS FOR APPROVED MANUFACTURERS. AND ADDITIONAL REQUIREMENTS.

3.– CONTRACTOR SHALL COORDINATE AND PROVIDE THE DIMMING CONTROLS, BALLASTS, SENSORS, LED DRIVERS, RELAYS, LAMPS, SWITCHES AND CONTROL DEVICES SO THAT THE DIMMING SYSTEM PERFORMS EFFECTIVELY. THE SYSTEM SHALL NOT STROBE, BLINK, HAVE A DELAY OPERATION OF THE INTENDED FIXTURES GREATER THAN ONE SECOND, OVERHEAT, HAVE A HARMONIC DISTORTION GREATER THAN 10%, HAVE A POWER FACTOR LESS THAN 0.95 OR ANY OTHER UNDESIRED EFFECT, OPERATION OR FUNCTION.

4.– ALL DIMMERS SHALL BE RATED TO HANDLE A LOAD 10% HIGHER THAN ITS CONNECTED LOADS.

5.– SYSTEM INSTALLATION, INITIAL PROGRAMING AND STARTUP SHALL BE PERFORMED BY FACTORY CERTIFIED TECHNICIANS.

6.– INSTALLER SHALL PROVIDE A MINIMUM ONE HOUR OF TRAINING TO THE FACILITY MANAGER OR ITS APPOINTED MECHANIC. IN ADDITION, THE INSTALLER SHALL PROVIDE FREE PHONE CUSTOMER SUPPORT AND A MINIMUM OF 4 HOURS ON SITE SUPPORT AFTER INSTALLATION.

Architect / Engineer:
BOTT PANTONE ARCHITECTS
600 24TH STREET
OGDEN, UTAH 84401
BPARCHITECTS.NET
P 801.394.3033
F 801.394.3054

Stamp:
LICENSED PROFESSIONAL ENGINEER
No. 291818
KENNETH D. MARKER
STATE OF UTAH

NIBLEY 12 & MENDON UTAH STAKE CENTER

APPROX. 1585 W. 3200 S.
NIBLEY, UTAH

Project for:
THE CHURCH OF JESUS CHRIST OF LATTER-DAY SAINTS

Mark	Date (DMY)	Description
	30-OCT-18	BID SET

Project Number: 1770
Plan Series: HET-SDS-09-07
Property Number: 5002240-17-010201

Sheet Title: LIGHTING CONTROL PLANS AND DIAGRAMS

Sheet: E603

HSDS-E603.dwg - 10/22/2018 - 1:49 PM

LIGHTING FIXTURE SCHEDULE

Type Mark	Description	Lamp	Lamp temp	Electrical Data	MFR1	Model1	MFR2	Model2	MFR3	Model3	MFR4	Model4	MFR5	Model5	MFR6	Model6
F1	4'x10" SURFACE MOUNTED FIXTURE WITH WRAP AROUND ACRYLIC LENS. *ELCTRONIC BALLAST SEE SPEC 265100	56W T8	3000 K	120 V/1-56 VA	Day-Brite	OWN232-UNV-1/2-EB	Metalux	WN-232A-UNV-GE-GE232 MAXLULTRA-U	H.E. Williams	17-4-232-A-LDS-EBLH2-AD-BD-UNV	LSI	WNA10-232-SSOLR-UE	Lithonia	SB232-MVOLT-APLP	Columbia	AWN-232
F2	0.14" THICK ACRI-TUF LENS. 2'x4' SURFACE MOUNTED LOW PROFILE TROFFER WITH STEEL HOUSING.	65W LED	3000 K	120 V/1-70 VA	Day-Brite	2SML-74L-830-4-FS-19F-UNV-DIM	Columbia	LJT24-30VLSM-FSAT12140-EDU	H.E. Williams	12-4-L72-AF12140-DIM-UNV	LSI	GA24-LED-SS-NW-UE-HI.140-FK24	Lithonia	2TLX4-72L-FW-A19-EZ1-LP830	Metalux	24-SURFACE-R-LD4-72-A19/156-UNV-L830-CD
F3	1'x4' RECESSED OR SURFACE MOUNTED FLAT PANEL SEE SPEC 265100.	40W LED	3000 K	Power 120 V/1-36 VA	NORA	NPD-E14/A4HL-34W-30-A NPD-14RFK/A	Cloumbia	CFP144030-FK14	H.E. Williams	50G-S14-L45/8XX-FWAPL /15/213(WHT)-DIM-UNV	LSI	ELFP14-LED-35-UE-FK14	Lauren	LGM1430WHE	Metalux	14SP4240RT DF-14W-U (META, ALLPROAMB)
F4	2' WALL MOUNTED VANITY FIXTURE WITH ACRYLIC DIFFUSER. *ELECTRONIC BALLAST SEE SPEC 265100 MOUNT AT CEILING.	20W T8	3000 K	120 V/1-20 VA	L.A. Lighting	BAN100-1-1-2R-PA-1E 8I-UNV	Metalux	BE117-UNV-GE-GE117 MAXPLULTRA-U	H.E. Williams	29-2-L15/830-CT-DIM -UNV	x	x	Lithonia	WP117 MVOLT APLP	Mercury Lighting	MP15-1-17-OCT-A-EL BS-UNI-LBF
F5	4' WALL MOUNTED VANITY FIXTURE WITH ACRYLIC DIFFUSER. *ELECTRONIC BALLAST SEE SPEC 265100. MOUNT ABOVE MIRRORS AT 7'-0". SEE SHEET A408.	28W T8	3000 K	120 V/1-28 VA	L.A. Lighting	BAN100-1-1-4R-PA-1E 8I-UNV	Metalux	BE132-UNV-GE-GE132 MAXPLULTRA-U	H.E. Williams	29-4-L30 /830-CT-DIM -UNV	x	x	Lithonia	WP132 MVOLT APLP	Mercury Lighting	MP15-1-32-OCT-A-EL BS-UNI-LBF
F6	4' SINGLE LAMP STRIP LIGHT. SURFACE OR CHAIN SUSPENDED. *ELECTRONIC BALLAST SEE SPEC 265100 WITH WIRE GUARD.	28W T8	3000 K	120 V/1-28 VA	Day-Brite	N132-UNV-1/1-EB W/ CGS4	Metalux	SNF-132UNV-GE-GE132 MAXPLULTRA-U WG-SNF-4FT-B	H.E. Williams	76-4-L53/8XX-WG-7614 -DIM-UNV	LSI	S132-SSOLR-UE-WG140	Lithonia	Z132 MVOLT APLP WGZ48	Columbia	CH4-132-CHWG4
F7	COVE STAGGERED STRIP ONE 2' LAMP LIGHT FIXTURE. *ELECTRONIC BALLAST SEE SPEC. 265100	17W T8	3000 K	120 V/1-17 VA	Day-Brite	SSR132-UNV-1/1-EB	Metalux	SSL132-UNV-GE-GE132 MAXPLULTRA-U	H.E. Williams	CX-C-2'-12"-L4/830-25-D-DIM-UNV	LSI	STG-132-SSOLR-UE	Lithonia	Z117 MVOLT APLP	Columbia	SS2-132
F8	COVE STAGGERED STRIP ONE 4' LAMP LIGHT FIXTURE. *ELECTRONIC BALLAST SEE SPEC. 265100	28W T8	3000 K	120 V/1-28 VA	Day-Brite	SSR132-UNV-1/1-EB	Metalux	SSL132-UNV-GE-GE132 MAXPLULTRA-U	H.E. Williams	CX-C-4'-12"-L6/830-25-D-DIM-UNV	LSI	STG-132-SSOLR-UE	Lithonia	SS132 MVOLT APLP	Columbia	SS4-132
F9	COVE STAGGERED STRIP TWO 4' LAMP FIXTURE. *ELECTRONIC BALLAST SEE SPEC 265100.	56W T8	3000 K	120 V/1-56 VA	Day-Brite	SSR232-UNV-1/2EB*	Metalux	SSL232-UNV-GE-GE232 MAXPLULTRA-U	H.E. Williams	CX-C-4'-12"-L8/830-25-D-DIM-UNV	LSI	STG-232-SSOLR-UE	Lithonia	SS232 MVOLT APLP	Columbia	SS4-232
F10	COVE 8' LONG STAGGERED STRIP FIXTURE. *ELECTRONIC BALLAST SEE SPEC 265100.	56W T8	3000 K	120 V/1-56 VA	Day-Brite	TSSR132-UNV-1/1-EB	Metalux	8TSSL132-UNV-GE-GE132 MAXPLULTRA-U	H.E. Williams	CX-C-8'-12"-L10/830-25-D-DIM-UNV	LSI	STG-132-2-SSOLR-UE	Lithonia	TSS132 MVOLT APLP	Columbia	SS8-132
F11	6" APERTURE RECESSED DOWNLIGHT WITH LED RETROFIT KIT AND SHALLOW HOUSING. WHITE TRIM AND LENSE. 1-1/4" CEILING FLANGE. *ELECTRONIC BALLAST.	1 LED RETROFIT 1200 LM	3000 K	120 V/1-21 VA	Sylvania	LED/RT6/HO/1500/830	Liton	LH7ICA-LRLDH621CWF-B45	GE	LED13RS6/830E26P	DMF	DCDHN6130P/ DCD2M30930WF DCD2TR6SWH/CC	Lithonia	65BEMWHILED30K I7XPR6	ELCO	EL770ICA-EL61230W
F12	8" APERTURE DOWNLIGHT WITH WHITE TRIM. DAMP LOCATION RATED.	LED 2000 LM		120 V/1-30 VA	ELCO	E8LF-1-40-E810L4030	GE Lighting Systems	LRXR618840MD W/ FRAME6R	DECO	DLED-AFK8-30-40 -DLEDT-R84-UNV-DM	Prescolite	LF8LEDG4-8LFLED7G4-40K	Juno	LRM8-23LM 30K MVOLT G3 80CRI P WH PF	Halo	PR820D010 PR8M34MDMW
F13	6" APERTURE WALL WASH FIXTURE WITH INCANDESCENT LAMP HOUSING, WHITE TRIM AND LED LAMP LABEL.	LED A21 1600 LM	3000 K	120 V/1-17 VA	Liton	LH7-LRS95C	Lightolier	1185/1100IC	Lithonia	6VI 6W9AZ TRW	PDS	PD615ED010/PDM5A830/ 61WWC				
F14	6" APERTURE INCANDESCENT DOWNLIGHT WITH VERTICAL LAMPS, CLEAR SPECULAR REFLECTOR, WHITE TRIM, 1-1/4" CEILING FLANGE. 9" MAXIMUM FIXTURE HEIGHT.	1-PAR38 LED REPLACEMENT 2000 LM DIMMABLE	3000 K	120 V/1-28 VA	Liton	LH7-LRS40C	PDS	PD620ED010/PDM6A830/61VC	DMF	DHIV6-D6261SFC	Lightolier	C7709CLW/CS700	Gotham	LP8N 802A TRW	Prescolite	LF81NC8V-B6
F15	8" APERTURE DOWNLIGHT WITH WHITE TRIM. DAMP LOCATION RATED	LED 3000 LM	4000 K	120 V/1-30 VA	Liton	LHALD825C070UE-LRALD8WWF-240-T40	Lightolier	C8L35N1BZ10V W/ C8L35DL35KWCCLWVB	Gotham	EVO 41/29 8AR MD 120 AZ10 TRW	Prescolite	LF8LEDG4/ 8LFLED8G440KWHWTTRG	PDS	PD630D010 PDM6A840 61VC	DMF	DHIV8-CC/D826SFCWR
F17	30" DIAMETER DOUBLE SEALED BOWL FIXTURE WITH MACHINED ALUMINUM TRIM RING. WITH FULLY SEALEDDOUBLE BOWL BOTTOM OF FIXTURES ELEV. = 110'-0" 50% Uplight, 50% downlight	VARIES	3000 K	120 V/1-180 VA	CRAFT METAL PRODUCTS, INC	SC3010L-EEG-PC-SA-SS--120/277-STD-LDS W/DBL BOWL	Manning	CPI-2379-30-BA-12L6T30D0 -120-WH-LDS-DB	Victor Illuminating, Inc	VLD4130-ACC 85LED-3K-SA-XX-120-SD-DM7	Le Lampiste	BWL-S-D-30/XX-30-LED/ 90-DBWL -LDS-CLA-SA	Spectrum	SPEC18-0003		
F18	36" DIAMETER DOUBLE SEALED BOWL FIXTURE WITH MACHINED ALUMINUM TRIM RING. *ELECTRONIC BALLAST WITH FULLY SEALED DOUBLE BOWL BOTTOM OF FIXTURES ELEV. = 113'-0" 50% Uplight, 50% downlight	VARIES	3000 K	120 V/1-270 VA	CRAFT METAL PRODUCTS, INC	SC3612L-BWI-PC-SA-AS--120/277-STD-LDS W/DBL BOWL	Manning	CPI-2379-36-BA-16L6T30D0 -120-WH-LDS-DB	Victor Illuminating, Inc	VLD4136-ACC 87LED-3K-SA-XX-120-SD-DM7	Le Lampiste	BWL-S-D-30/XX-36-LED/ 106-DBWL -LDS-CLA-SA	Spectrum	SPEC18-0004		
F19	WALL SCONCE WITH SEMISPHERICAL ACRYLIC LENS AND ALUMINUM TRIM RING TO MATCH PENDANT FIXTURES. *ELECTRONIC BALLAST. SEE A/301 FOR MOUNTING.	26W	3000 K	CB3430 120 V/1-30 VA	CRAFT METAL PRODUCTS, INC	SC1890S-EDS-PC-SA--120/277-LDS	Manning	CBI-2749-1L17T30D0-120-WH-LDS	Philips	LPW16	Victor Illuminating, Inc	VWS4016-13LED-3K-SA-120-DM7	Spectrum	SPEC-0007		
F20	SURFACE 4' TRACK, TWO CIRCUIT, WITH 3 AMP CURRENT LIMITER.			120 V/1-360 VA	Liton	LPC04-W / LP99-1-C-30-W	Halo	L641P L900P L941P	Cree	S-CT-T4-2C-WH/S-CT-FEED-END-2C-WH/S-CT-CNCTR-M-STRGHT-2C-WH	Lightolier	6101NWH/6060WH	Juno	TU 4FT WH TCLCB3A WHT	ELCO	EC004W/EC801W/EP800W
F21	SURFACE 8' TRACK, TWO CIRCUIT WITH 5 AMP CURRENT LIMITER			120 V/1-600 VA	Liton	LPC08-W/LP99-1-C-60-W	Halo	L624P L900P L941P L949P	Cree	S-CT-T8-2C-WH/S-CT-FEED-END-2C-WH/S-CT-CNCTR-M-STRGHT-2C-WH	Lightolier	6102NWH/6149NWH	Juno	TU 8FT WH TCLCB5A WHT	ELCO	EC008W/EC808W
F22	SURFACE CYLINDRICAL SPOT LAMP HOLDER COMPATIBLE WITH TRACK.	1-PAR 38 LED REPLACEMENT 2000 LM DIMMABLE	3000 K	120 V/1-28 VA	Liton	LT850-W/LP913W	Halo	L80815FL9030P	Cree	S-CT-RB-75W-B30/P30L-120V-WH/S-CT-MONOPT-MTG-WH	Lightolier	6310/6190WH	Juno	T317 WHB WH	ELCO	ET650W/EP811W
F23	PAR38 TRACK LAMP HOLDER. *LAMP COLORS 8-WHITE, 4-RED, 4- BLUE, 4-AMBER.	1-PAR 38 LED REPLACEMENT 2000 LM DIMMABLE	3000 K	120 V/1-0 VA	Liton	LT850-W	Halo	L80815FL9030P	Cree	S-CT-LPLH-P20/P30/P38-120V-WH	Lightolier	9638WH	Juno	(1)T317WHBWH(1)T5980BL(4)CGF469WRED (4)CGF469MBLU (4)CGF469 MAMB	ELCO	ET650W FLAT BACK SYLNDR R40
F24	SURFACE CERAMIC LAMP HOLDER. PROVIDE METAL WIRE GUARD.	1-A19 LED REPLACEMENT 1000 LM	3000 K	120 V/1-60 VA	Leviton	49875	Pass & Seymour	274	Arrow-Hart	604	Bryant	5228				
F26	18' ALUMINUM POLE HINGED PARKING AREA LIGHTING 208 VOLTS, SEE FIXTURE SCHEDULE NOTE. TYPE III DISTRIBUTION. POLE MOUNTED LIGHT FIXTURE. PROVIDE WITH VANDAL RESISTANT HARDWARE.	DIMMABLE LED 6000 LM	4000 K	120 V/1-60 VA	Visionaire	PGS-1-T3-48LC-5	Cooper	PRV-A15-D-UNV-T3-XX SA18D4-H-SCBA-DM10-BC (MCGR, HAPCO-AL)	Cree	ARE-EDG-3M-DA-06-UL-SCBA-525MA	Hubbell	CL1SA32LU4K3SCBACD	Lithonia	KAD LED 60C53030KR3MVOLT SPD04 DDBXD PHA-5-4012-18-D1 DDBXD	LSI	XASU-FT-LED64-HO-NW-UE-CBA/705-4012-18
F27	WALL MOUNTED. WET LOCATION FINISH TO MATCH PARKING LOT FIXTURES. PROVIDE FIXTURE WITH INTEGRAL BACK BOX. PROVIDE WITH VANDAL RESISTANT HARDWARE.	LED 2000 LM	4000 K	120 V/1-40 VA	Stonco	LPW16-58-WHITE	Lumark	XTOR2B-W-WT	DECO	D441-LED-20-40-UNV -T4-WH	Hubbell	LNC2-12LU-4K-TYPE III-4	Lithonia	WSQ LED-2-10A700/40K-SR3 120 PE DDBXD	Mule	MERU-LED-AC-WH
F25	EXIT SIGN. PROVIDE DIRECTIONAL ARROWS AS SHOWN ON PLANS.	LED INCLUDED		120 V/1-5 VA	Chloride	VEGWEM	Compass	CEG	H.E. Williams	EXIT-G-EM-WHT-D	Evenlite	TLX-EM-GU-W	Isolite	RLEMGWW	LSI	EX-G-U-WB-WH

FIXTURE SCHEDULE NOTE:

1. SEE DETAIL B/SD201 FOR POLE BASE.
2. BASE SHALL BE HINGED.
3. ORIENT BASE SO POLE MAY BE LOWERED WITHOUT HITTING ANY OBSTRUCTION.
4. SEE SPECIFICATIONS 265600 FOR FIXTURE AND POLE FINISH AND COLOR.
5. THE FIXTURE DESCRIPTION AND SPECIFICATIONS TAKES PRECEDENCE OVER CATALOG NUMBER.
6. ALL LED FIXTURES SHALL BE LISTED BY THE DESIGN LIGHTS CONSORTIUM OR BE ENERGY STAR LABELED. LEDS SHALL HAVE A MINIMUM 100 LM/WATT EFFICIENCY AND A 5 YEAR WARRANTED LIFE. LED LAMP DRIVERS SHALL HAVE INTEGRAL SURGE PROTECTION.
7. REFER TO SPECIFICATION FOR FLUORESCENT BALLAST REQUIREMENTS.
8. ALL LED LAMPS SHALL HAVE DRIVERS COMPATIBLE WITH LINE VOLTAGE DIMMERS.
9. THE INDICATED LED LAMP LM/WATT EFFICIENCIES INDICATED ARE MINIMAL VALUES.

Architect / Engineer:

BOTT PANTONE ARCHITECTS

620 24TH STREET
OGDEN, UT 84401
BP-ARCHITECTS.NET
P 801.394.3033
F 801.394.9064

Stamp:

LICENSED PROFESSIONAL ENGINEER
No. [illegible]
KENNETH D. GARNER
STATE OF UTAH

NIBLEY 12 & MENDON UTAH STAKE CENTER

APPROX. 1585 W. 3200 S. NIBLEY, UTAH

Project for:

THE CHURCH OF JESUS CHRIST OF LATTER-DAY SAINTS

Mark	Date (D-M-Y)	Description
	30-OCT-18	BID SET

Project Number: 1770

Plan Series: HET-SDS-09-07

Property Number: 5002240-17-010201

Sheet Title: LIGHTING FIXTURE SCHEDULE

Sheet: E604

HSDS-E604.dwg - 10/22/2018 - 1:49 PM

Distribution Wiring Schedules							
Load Name	# of Runs	Wire Size	Wire Type	Rating	True Current	Neutral Rating	Bussing
Short Circuit Rating							
PANEL A	1	3-#250, 1-#250, 1-#4	Al XHHW2	200 A	124 A	100%	ALUMINUM
22000							
PANEL B	1	3-#3/0, 1-#3/0, 1-#4	Al XHHW2	150 A	76 A	100%	ALUMINUM
10000							
PANEL C	1	3-#250, 1-#250, 1-#4	Al XHHW2	225 A	159 A	100%	ALUMINUM
22000							
PANEL LC1	1	3-#3/0, 1-#3/0, 1-#4	Al XHHW2	150 A	111 A	100%	ALUMINUM
22000							
PANEL LC2	1	3-#1, 1-#1, 1-#6	Al XHHW2	100 A	53 A	100%	ALUMINUM
10000							
PANEL LC3	1	3-#1/0, 1-#1/0, 1-#4	Al XHHW2	125 A	91 A	100%	ALUMINUM
10000							
PANEL LC4	1	3-#1, 1-#1, 1-#6	Al XHHW2	100 A	56 A	100%	ALUMINUM
10000							
PANEL WELL ASSEMBLY	1	3-#6, 1-#6, 1-#10	Al XHHW2	50 A	14 A	100%	ALUMINUM
10000							
PANEL D	1	3-#1, 1-#1, 1-#6	Al XHHW2	100 A	46 A	100%	ALUMINUM
10000							
PANEL M	4	3-#250, 1-#250, 1-#3/0	Al XHHW2	800 A	670 A	100%	ALUMINUM
65000							

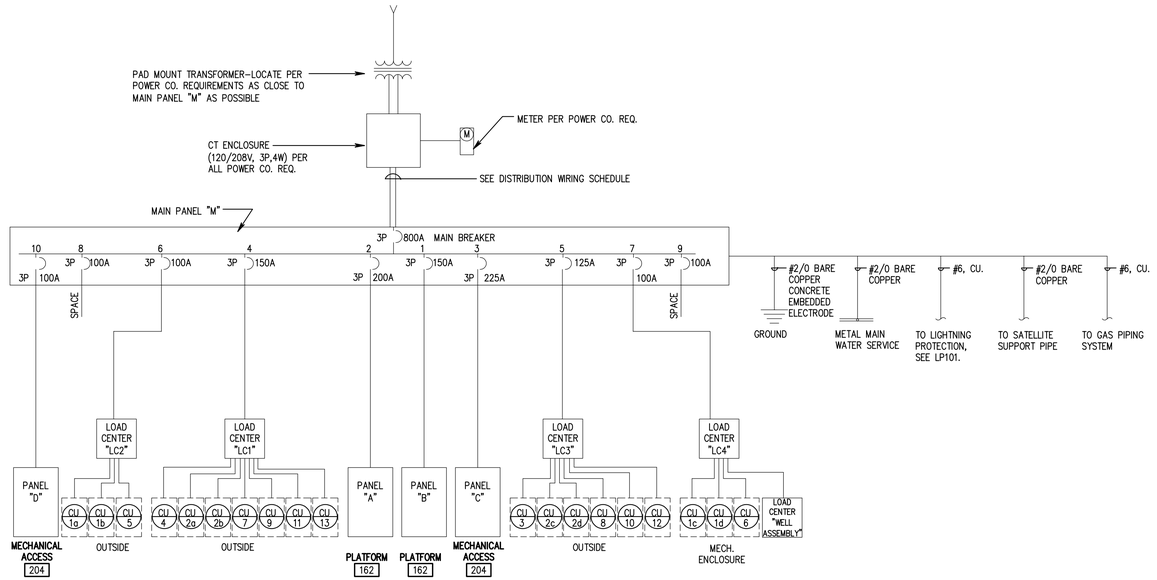

1 SINGLE-LINE DIAGRAM
NOT TO SCALE

Architect / Engineer:

BOTT PANTONE ARCHITECTS
620 24TH STREET
OGDEN, UT 84401
BP-ARCHITECTS.NET
P 801.394.3033
F 801.394.9064

Stamp:

LICENSED PROFESSIONAL ENGINEER
No. 2718[illegible]
KENNETH D. GARNER
STATE OF UTAH

NIBLEY 12 & MENDON UTAH STAKE CENTER
APPROX. 1585 W. 3200 S.
NIBLEY, UTAH

Project for:
THE CHURCH OF JESUS CHRIST OF LATTER-DAY SAINTS

Mark	Date (D-M-Y)	Description
-	30-OCT-18	BID SET

Project Number: 1770
Plan Series: HET-SDS-09-07
Property Number: 5002240-17-010201

Sheet Title: POWER SINGLE LINE DIAGRAM

Sheet: E605

HSDS-E605.dwg - 10/22/2018 - 1:49 PM

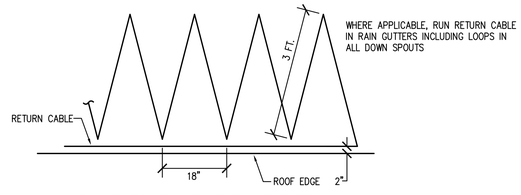

ROOF EDGE HEAT TAPE DETAIL

NOTES

1. EASY HEAT GC1 JUNCTION BOX/ICE SENSOR. HIDE UP UNDER SOFFIT. RUN 3#10 WIRE PER SPECIFICATION TO 30A/2P BREAKER IN PANEL 'X' IN "LOCATION".
2. EASY HEAT SR52J 208V SELF REGULATING HEAT CABLE, LENGTH AS REQUIRED. PROVIDE SPACERS, CLIPS, END SEALS, ETC. FOR A COMPLETE INSTALLATION. CABLE TO RUN FULL LENGTH OF GUTTER AND DOUBLE DOWN AND BACK IN DOWNSPOUTS. RUN 2#10 WIRE IN 1/2" CONDUIT TO 30A/2P BREAKER IN PANEL. HEAT CABLE SECTIONS CAN BE COMBINED ON SAME CIRCUIT UP TO A MAXIMUM OF 4000 WATTS. CABLE IS 8W PER FOOT.
3. VERIFY ALL DOWNSPOUT LOCATIONS WITH ARCHITECTURAL DRAWINGS. CABLE TO LOOP DOWN AND BACK.

GENERAL NOTES:

1. LOCATE PILOT LIGHTS AS CALLED FOR IN SPECIFICATIONS ABOVE PANEL OF ORIGINATION.

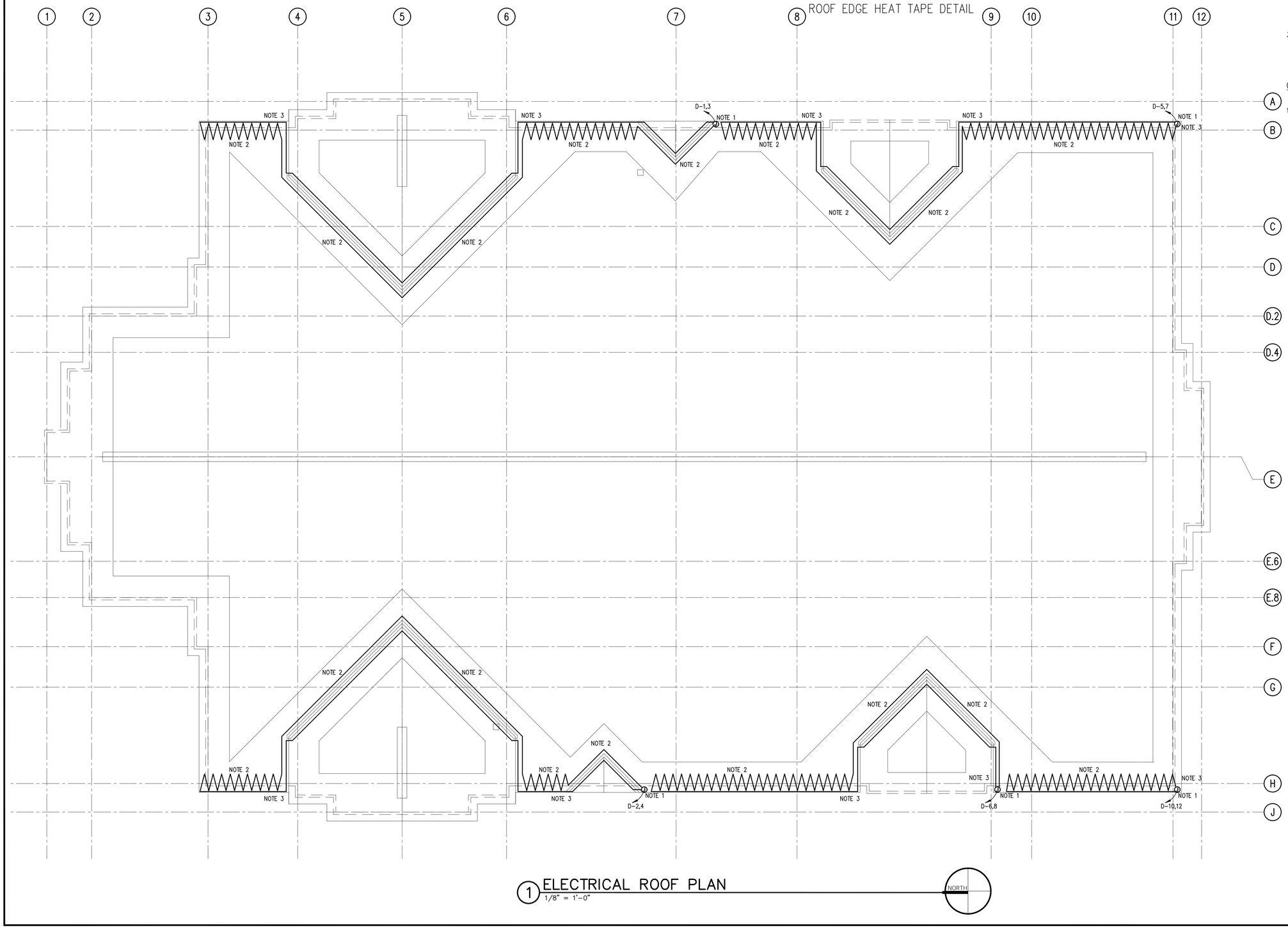

1 ELECTRICAL ROOF PLAN
1/8" = 1'-0"

NORTH

Architect / Engineer:

BOTT PANTONE ARCHITECTS

620 24TH STREET
OGDEN, UTAH 84401
BPARCHITECTS.NET
P 801.394.3033
F 801.394.3054

Stamp:

LICENSED PROFESSIONAL ENGINEER
No. 291884
KENNETH D. PANTONE
STATE OF UTAH

NIBLEY 12 & MENDON UTAH STAKE CENTER

APPROX. 1585 W. 3200 S.
NIBLEY, UTAH

Project for:
THE CHURCH OF JESUS CHRIST OF LATTER-DAY SAINTS

Mark	Date (DMY)	Description
-	30-OCT-18	BID SET

Project Number: 1770
Plan Series: HET-SDS-09-07
Property Number: 5002240-17-010201

Sheet Title: ROOF HEAT TAPE PLAN

Sheet: E606

HSDS-E606.dwg - 10/22/2018 - 1:50 PM

3200 SOUTH STREET

1600 WEST

SEE DETAIL 2 FOR CONTINUATION

EXISTING TELECOMMUNICATIONS AND CABLE TV PEDESTALS

EXISTING RMP SECTIONALIZING CABINET 111-11-01#/200280

LOAD CENTER 'WELL ASSEMBLY' NOTE 7.

MYER PUMP

AMIAD FILTER

STRONG BOX ENCLOSURE WITH PUMP AND FILTER. SEE SHEET C-801 FOR REFERENCE.

Storm Water Detention Area

PROVIDE AND INSTALL (1) 4" CONDUIT FROM THE TELEPHONE PEDESTAL TO THE DMARK LOCATION IN TECHNOLOGY 103. TRENCH THE CONDUIT TO 36" BELOW GRADE. PROVIDE A MAGNETIC RIBBON AT 12" BELOW GRADE.

PROVIDE AND INSTALL (1) 2" CONDUIT FROM THE CABLE TV PEDESTAL TO THE DMARK LOCATION IN TECHNOLOGY 103. TRENCH THE CONDUIT TO 36" BELOW GRADE. PROVIDE A MAGNETIC RIBBON AT 12" BELOW GRADE.

PROVIDE AND INSTALL (1) 4" CONDUIT FROM THE EXISTING SECTIONALIZING CABINET TO THE TRANSFORMER PAD. TRENCH THE CONDUIT TO 36" BELOW GRADE. PROVIDE A MAGNETIC RIBBON AT 12" BELOW GRADE.

LOAD CENTER 'LC4'

MAIN PANEL 'M' CT CAN METER SOCKET

Heritage 09T Stake Center
Style "D"

PROVIDE AND INSTALL (3) 4" CONDUITS FROM THE TRANSFORMER LOCATION TO THE MAIN PANEL. TRENCH THE CONDUIT TO 36" BELOW GRADE. PROVIDE A MAGNETIC RIBBON AT 12" BELOW GRADE.

3#10 THWN CU 3/4" CONDUIT. SEE CONTROL DIAGRAM ON SHEET E603.

C-40

PROVIDE A NEW UTILITY TRANSFORMER PAD. PAD MUST MEET PACIFICORP FLAT PAD DETAIL ZG 532, FOR THREE-PHASE TRANSFORMERS.

F26

A-33

3#8 THWN CU 1" C.

STOR. BLDG.

NOTES

1. FOR UNDERGROUND CONDUIT RUNS, USE PVC-40 PIPE WITH BURIAL DEPTH PER CODE REQUIREMENTS. USE INTERMEDIATE METAL CONDUIT OR RIGID STEEL CONDUIT FOR EXPOSED RISER UP TO SWITCH OR OUTLETS.
2. INSTALL TIME SWITCH (4-HOUR CYCLE, NO-HOLD, AUTOMATIC SHUT-OFF, INTERMATIC #FF34H OR EQUAL BY PARAGON OR TORK) WITH CAST ALUMINUM WEATHERPROOF COVER, ON COLUMN AT 48 INCHES ABOVE CONCRETE SLAB TO CENTER OF BOX.
3. CONNECT LIGHTING FIXTURES WITH SURFACE MOUNTED 1/2" EMT AND STEEL FITTINGS AND NO. 12 THWN OR XHHW COPPER CONDUCTORS. RUN CONDUIT THROUGH NOTCHED HOLE AT TOP OF GLU-LAM BEAM. SEE ARCHITECTURAL.
4. EIGHT LIGHT FIXTURES SHALL BE IMPACT RESISTANT, ENCLOSED, SURFACE MOUNTED LED WITH DAMP LOCATION LABEL. LITHONIA VGRSC 50LED 3500K POLYCARBONATE 120V, COLOR BY ARCHITECT. LPI SURFACE MOUNT FIXTURES OR EQUAL BY COLUMBIA, DAY-BRITE OR METALUX.
5. PROVIDE WEATHERPROOF WHILE IN USED, CAST ALUMINUM OUTLET COVERED WITH PADLOCK LOOPS.
6. REFER TO DETAIL B/SD201 FOR THE LIGHT POLE BASE.
7. THE LOAD CENTER IS TO BE MOUNTED ON A UNISTRUT RACK. THE UNISTRUT RACK IS TO BE PROVIDED AND INSTALLED BY THE ELECTRICAL CONTRACTOR.

ROCKY MOUNTAIN POWER CONTACT

JIM KNIGHT
JAMES.KNIGHT@ROCKYMOUNTAINPOWER.NET
WORK ORDER # 6480361

1 ELECTRICAL SITE PLAN
1" = 20'-0"

NORTH

BORE UNDER 3200 SOUTH TO INSTALL THE REQUIRED CONDUIT. PROVIDE AND INSTALL (1) 4" CONDUIT FROM THE EXISTING POLE TO THE EXISTING SECTIONALIZING CABINET. INSTALL THE CONDUIT AT 36" BELOW GRADE. PROVIDE A DETECTIBLE MAGNETIC RIBBON.

EXISTING TELECOMMUNICATIONS AND CABLE TV PEDESTALS

EXISTING RMP SECTIONALIZING CABINET 111-11-01#/200280

EST

2 ELECTRICAL SITE PLAN
1" = 20'-0"

NOTE 2
NOTE 5
C-19
3#10 THWN CU 3/4" C. NOTE 1
PAVILLION
C-29
3#6 THWN CU 1" C. NOTE 1
C-32
3#6 THWN CU 1" C. NOTE
NOTE 3
NOTE 4
C-22
C-34
WP GFCI

Architect / Engineer:
BOTT PANTONE ARCHITECTS
600 24TH STREET
OGDEN, UTAH 84401
BPARCHITECTS.NET
P 801.394.3033
F 801.394.3054

Stamp:
LICENSED PROFESSIONAL ENGINEER
No. 291881
KENNETH D. MARKER
STATE OF UTAH

NIBLEY 12 & MENDON UTAH STAKE CENTER

APPROX. 1585 W. 3200 S.
NIBLEY, UTAH

Project for:
THE CHURCH OF JESUS CHRIST OF LATTER-DAY SAINTS

Mark	Date (mm/yy)	Description
-	30-OCT-18	BID SET

Project Number: 1770
Plan Series: HET-SDS-09-07
Property Number: 5002240-17-010201

Sheet Title: ELECTRICAL SITE PLAN

Sheet: ES101

HSDS-ES101.dwg - 10/22/2018 - 1:50 PM

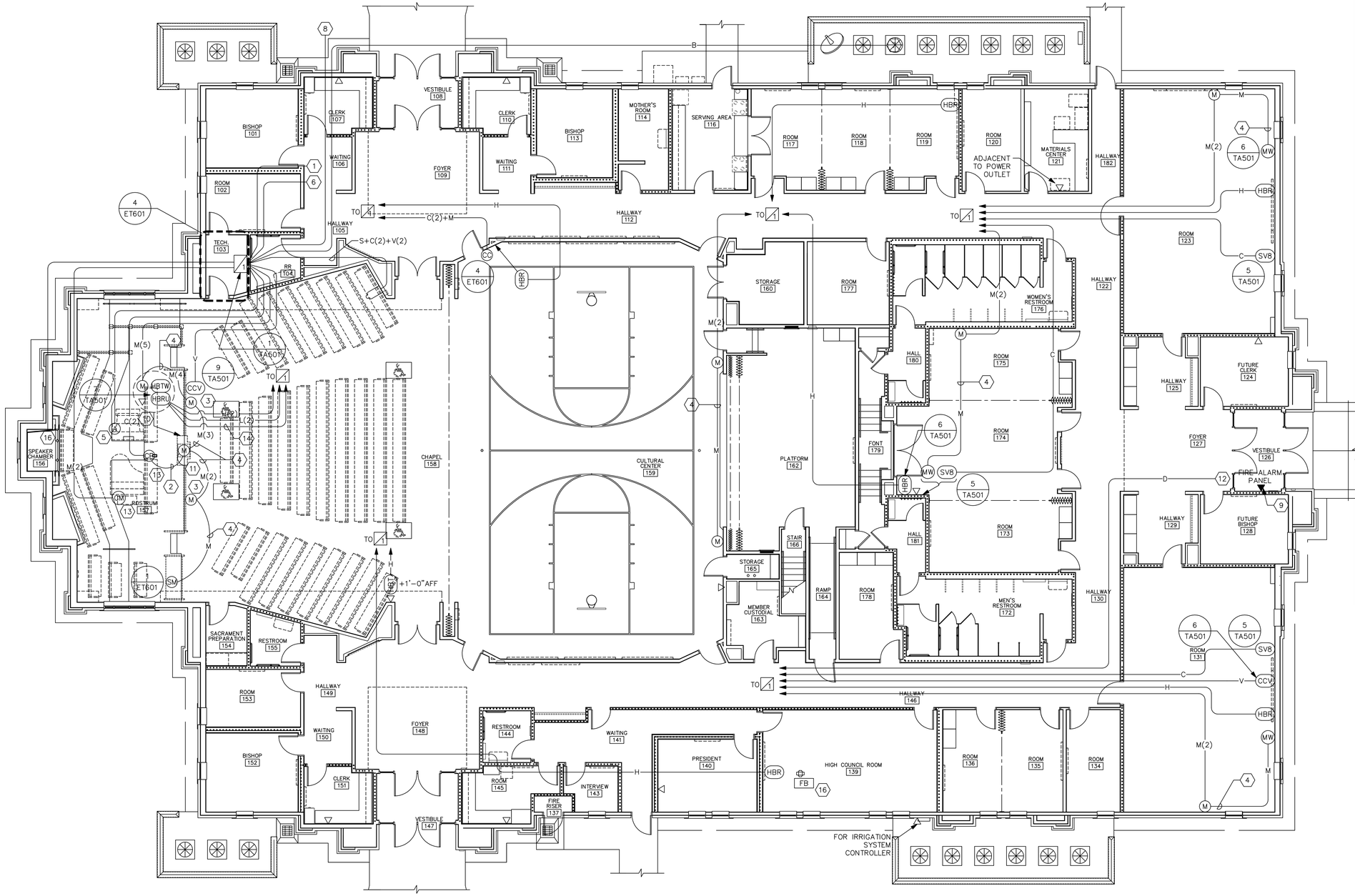

1 MAIN FLOOR PLAN–SOUND

1/8" = 1'-0"

NORTH

SHEET KEYNOTES

1. PROVIDE GROUNDING COMPONENTS AS SHOWN ON DETAIL 7/ET601.
2. TO PULPIT MOTOR CONTROL.
3. MOUNT JUNCTION BOXES HORIZONTALLY AND CENTERED IN HARDWOOD BASE ON FRONT OF ROSTRUM.
4. LOOP EXTRA CABLES THROUGH JUNCTION BOXES. DO NOT CUT.
5. ORGAN INPUT. LEAVE 5'–0" PIGTAIL.
6. INSTALL 3 EACH, 2" CONDUIT TO MECHANICAL EQUIPMENT PLATFORM WALKWAY.
7. PROVIDE 1 EACH, 1.5" CONDUIT WITH 1 EACH, "B" TYPE CABLE WITH WEATHERHEAD TO SATELLITE DISH LOCATION. PROVIDE 15' CABLE AT DISH. COIL AND LABEL. SEE SITE PLAN FOR DISH LOCATION.
8. PROVIDE 1 EACH, 1.5" CONDUIT TO SHED.
9. PHONE CONNECTION TO FIRE ALARM PANEL.
10. SEE DETAIL 10/TA501 FOR MOUNTING OF HBRU, HBTW AND OTHER DEVICES IN PULPIT SIDE.
11. SEE DETAILS G/A422 AND H/A422 FOR ROUGH–IN AND MOUNTING OF PULPIT MICROPHONE.
12. FIRE ALARM SOUND SYSTEM MUTE CONNECTION.
13. MOUNT ON VERTICAL FACE OF RISER.
14. INSTALL 2 EACH ADDITIONAL 2" CONDUITS WITH PULL STRING BETWEEN PULPIT AND TECH ROOM 103 EQUIPMENT CABINET #1.
15. PROVIDE 2 EACH, 1.5" CONDUITS STUBBED TO BOTTOM SECTION OF ORGAN CHAMBER FOR FUTURE USE.
16. MOUNT DATA OUTLET IN FLOOR BOX. PROVIDE 1 EACH, 1" CONDUIT TO EQUIPMENT RACK #1 FOR DATA CABLE, AND 2 EACH, 1" CONDUITS TO ACCESSIBLE SPACE IN MECHANICAL PLATFORM. SEE DETAIL 3/ET601.

GENERAL SHEET NOTES

1. EACH VOICE AND DATA SHALL HAVE A MINIMUM 1" CONDUIT FROM OUTLET TO EQUIPMENT RACK #1. INSTALLER IS TO BE FAMILIAR WITH, AND COMPLY WITH THE ANSI/TIA/EIA/569–C STANDARDS. CONDUIT SHALL HAVE A TOTAL DISTANCE OF NO MORE THAN 230'–0". IF TOTAL BENDS ARE MORE THAN 180 DEGREES, INCREASE CONDUIT SIZE ONE TRADE SIZE ONE SIZE FOR EVERY ADDITIONAL 90 DEGREES. TYPICAL OF ALL LOCATIONS.
2. INSTALL EACH CABLE TYPE IN A SEPARATE CONDUIT.

SYMBOL LEGEND

- (M) SINGLE MICROPHONE INPUT
- (SM) SINGLE MICROPHONE INPUT, SURFACE MOUNTED
- (MW) MICROPHONE, AUX INPUT
- (CM) DUAL MICROPHONE INPUT
- (A) ORGAN INPUT
- (CC) CULTURAL CENTER AUDIO CONTROL PANEL
- (CP) CHAPEL AUDIO CONTROL PANEL
- (HBTW) HDMI INPUT, AUX AUDIO INPUT
- (HBRU) HDMI OUTPUT, AUDIO RECORD OUTPUT
- (CCV) COMPOSITE VIDEO OUTPUT
- (SV8) SOURCE VOLUME KEYPAD CONTROLLER
- (HBR) HDBaseT HDMI OUTPUT
- (HBT) HDBaseT HDMI INPUT
- CAMERA PTZ
- FB FLOOR BOX (DETAIL 3/ET601)
- DATA OUTLET
- VOICE OUTLET

Architect / Engineer:
BOTT PANTONE ARCHITECTS
630 24TH STREET
OGDEN, UT 84401
BPARCH@BOTTS.NET
P 801.394.9064
F 801.394.9064

Stamp:

NIBLEY 12 & MENDON UTAH STAKE CENTER

APPROX. 1585 W. 3200 S.
NIBLEY, UTAH

Project for:
THE CHURCH OF JESUS CHRIST OF LATTER-DAY SAINTS

Mark	Date (DAY)	Description
30-OCT-18		BID SET

Project Number: 1770
Plan Series: HET-SDS-09-07
Property Number: 5002240-17-010201

Sheet Title: ELECTRICAL MICROPHONE, VIDEO SYSTEM LAYOUT

Sheet: ET101

HSDS-ET101.dwg - 10/21/2018 - 1:39 PM

1 SHEET KEYNOTES

1. MOUNT DATA OUTLET ON WALL IN EQUIPMENT PLATFORM ABOVE AT +7' AFF. SEE DETAIL 7/ET601.
2. MOUNT 4-PORT DATA OUTLET IN EQUIPMENT PLATFORM ABOVE NEXT TO MECHANICAL 'RIG' WEB INTERFACE. SEE SHEET M102.

SYMBOL LEGEND

- (V) SOUND SYSTEM VOLUME CONTROL
- (IR) INFRARED SENSORS
- WAP ▷ DATA OUTLET, WIRELESS ACCESS POINT
- ▷ DATA OUTLET
- (S_4) SPEAKER, 4"
- (S_6) SPEAKER, 6"
- (S_M) MASKING SPEAKER, 4"
- (SWM) VOLUME CONTROL/SWITCH

1 MAIN FLOOR REFLECTED CEILING PLAN-SOUND
1/8" = 1'-0"

NORTH

Architect / Engineer:
BOTT PANTONE ARCHITECTS
630 24TH STREET
OGDEN, UT 84401
BPARCH@BOTTS.NET
P 801.394.9063
F 801.394.9064

Stamp:

NIBLEY 12 & MENDON UTAH STAKE CENTER

APPROX. 1585 W. 3200 S.
NIBLEY, UTAH

Project for:
THE CHURCH OF JESUS CHRIST OF LATTER-DAY SAINTS

Mark	Date (d-mm-y)	Description
1	30-OCT-18	BID SET

Project Number: 1770
Plan Series: HET-SDS-09-07
Property Number: 5002240-17-010201

Sheet Title: ELECTRICAL SOUND SYSTEM LAYOUT

Sheet: ET102

H:\SDS-ET102.dwg - 10/21/2018 - 1:38 PM

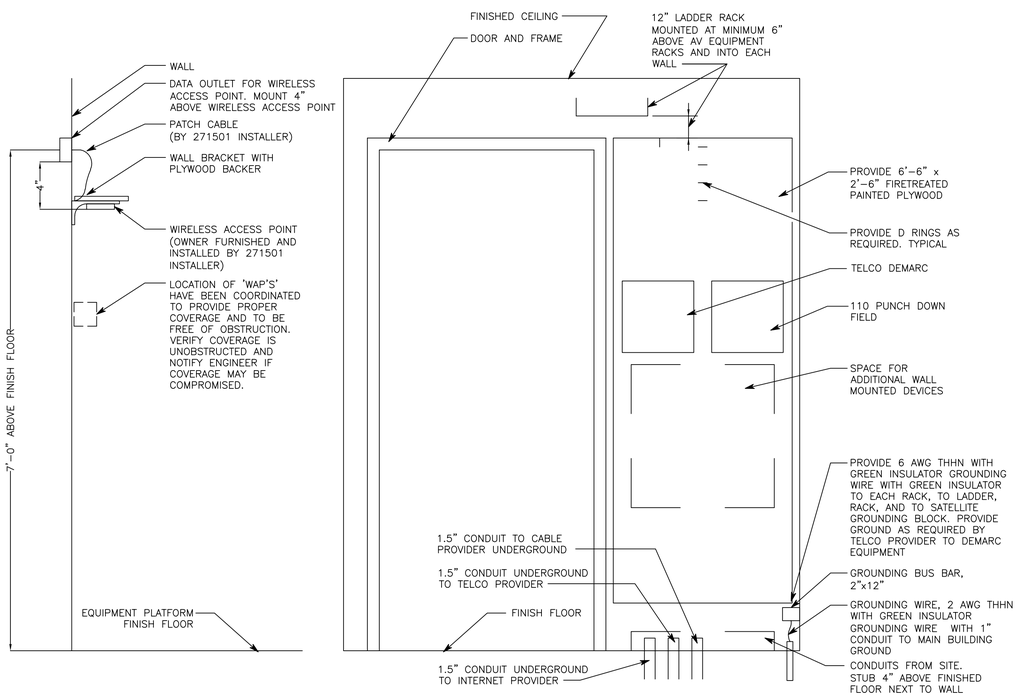

9 WIRELESS ACCESS POINT 'WAP' MOUNTING DETAIL
NO SCALE

6 TECH 103 WALL ELEVATION
NO SCALE

GENERAL PROJECT NOTES

1. NO CHANGES SHALL BE MADE WITHOUT THE PROJECT AV/STRUCTURED CABLING CONSULTANT'S WRITTEN CONSENT.
2. REFER TO DRAWINGS FOR EXACT NUMBER OF COMPONENTS USED IF NOT SPECIFIED IN EQUIPMENT LIST.
3. PROVIDE CONDUIT FOR ALL LOW VOLTAGE CABLES SHOWN ON ET SHEETS AS FOLLOWS:
   - 3.1. PROVIDE CONDUIT FOR H,C,D,V, AND S CABLES FROM DEVICE TO MECHANICAL EQUIPMENT PLATFORM ABOVE TECHNOLOGY ROOM 103. CABLES MAY THEN RUN EXPOSED AND STUB DOWN TO LADDER RACK. PROTECT EXPOSED CABLING ACCORDING TO DIVISION 27. ALLOW NO OTHER CABLE TO ATTACH TO TECHNOLOGY CABLES.
   - 3.2. PROVIDE CONDUITS UNDER SLAB FOR ALL CABLING FROM ROSTRUM TO TECHNOLOGY ROOM EQUIPMENT RACK.
   - 3.3. PROVIDE CONDUIT UNDER SLAB FOR ALL "M", "B", AND "L" CABLES FROM DEVICE TO TECHNOLOGY ROOM EQUIPMENT RACK.
   - 3.4. ALL CABLING IN WALLS SHALL BE IN CONDUIT.
   - 3.5. SIZE CONDUIT AS NOTED OR ACCORDING TO CODE WHICHEVER IS GREATER WITH 0.75" MINIMUM.
   - 3.6. INSTALL DIFFERENT CABLE TYPES IN SEPARATE CONDUITS UNLESS NOTED OTHERWISE. SEPARATE CABLE TYPES OUTSIDE OF CONDUIT BY 12" MINIMUM
   - 3.7. ALL CONDUITS WITH OR WITHOUT CABLES SHALL HAVE A PULL STRING.
   - 3.8. LABEL ALL CONDUITS WITH DESTINATION.
   - 3.9. DEBUR ALL CONDUIT STUBS AND FIT WITH PLASTIC BUSHING
   - 3.10. RACEWAY SHALL BE FURNISHED AND INSTALLED BY DIVISION 26. CABLING IS FURNISHED AND INSTALLED BY DIVISION 27. RACEWAY, CABLING, AND TERMINATIONS SHALL BE ACCORDING TO 27 1501.
4. DIVISION 26 INSTALLER IS TO PROVIDE ALL ROUGH-IN INDICATED FOR DIVISION 27 INSTALLER. ALL ROUGH-IN SHALL COMPLY WITH ANSI/TIA/EIA 569-B STANDARDS. THIS INCLUDES, BUT IS NOT LIMITED TO, THE LIMITATION OF (2) 90° BEND FOR CONDUIT. IT IS THE DIVISION 26 INSTALLERS RESPONSIBILITY TO ENSURE COMPLIANCE WITH STANDARD.
5. REFER TO SHEETS A421-A423 FOR ADDITIONAL INFORMATION ON ROUGH-IN. SEE "A" SHEETS FOR MOUNTING DETAILS IN MILLWORK.
6. SPEAKER TRIM RINGS ARE FURNISHED BY DIVISION 27 AND INSTALLED BY DIVISION 26.
7. "ET" SHEETS SHOW WORK AND MATERIALS BY DIVISION 26 AND DIVISION 27. SEE SPECIFICATIONS AND DRAWING NOTES FOR RESPONSIBILITY FOR EACH ITEM.
8. PROVIDE GROUNDING AS SHOWN ON DRAWINGS AND IN COMPLIANCE WITH CODE AND ANSI/TIA/EIA 569-B
9. DIVISION 26 SHALL FURNISH AND INSTALL SEISMIC RESTRAINT CABLE TO ALL SPEAKER BACKBOXES. DIVISION 27 SHALL ATTACH SEISMIC RESTRAINT CABLE TO SPEAKERS.

ELECTRICAL SYSTEM EQUIPMENT LIST

SYM	DESCRIPTION	QTY	NOTES
(M) (MW) (CCV)	3" DEEP, SINGLE GANG BOX MOUNTED AT ELECTRICAL OUTLET HEIGHT, OR AS NOTED	OFP	SEE DETAIL 6/TA501 FOR CCV DETAIL
(HBT) (HBR)	3" DEEP, DOUBLE GANG BOX W/ DOUBLE GANG PLASTER RING MOUNTED AT ELECTRICAL OUTLET HEIGHT, OR AS NOTED	OFP	
(V)	2-1/8" DEEP, 4" SQUARE BOX W/ 5/8" DEEP, SINGLE GANG PLASTER RING MOUNTED AT ELECTRICAL SWITCH HEIGHT	OFP	
WAP ▽	3" DEEP, DOUBLE GANG BOX W/ SINGLE GANG PLASTER RING.	OFP	SEE DETAIL 9/ET601
▽	3" DEEP, DOUBLE GANG BOX MOUNTED AT ELECTRICAL OUTLET HEIGHT WITH SINGLE PLASTER RING	OFP	
▼	3" DEEP, DOUBLE GANG BOX MOUNTED AT ELECTRICAL OUTLET HEIGHT WITH SINGLE PLASTER RING, OR AS NOTED	OFP	
(SV8)	2-1/8" DEEP, 4" SQUARE BOX W/ 5/8" DEEP, DOUBLE GANG PLASTER RING MOUNTED AT ELECTRICAL SWITCH HEIGHT	OFP	SEE DETAIL 5/TA501
(SVM)	2-1/8" DEEP, 4" SQUARE BOX W/ 5/8" DEEP, DOUBLE GANG PLASTER RING MOUNTED AT ELECTRICAL SWITCH HEIGHT	OFP	SEE DETAIL 4/TA501
(CC)	3-1/2" DEEP, TRIPLE GANG MASONRY BOX ORIENTED W/ LONG DIMENSION VERTICAL AS SHOWN IN WALL AT +5'-0" ABOVE FINISHED FLOOR	1	SEE DETAIL 7/ET601
(IR)	3" DEEP, DOUBLE GANG BOX MOUNTED IN DOOR HEADER	OFP	SEE DETAIL 2/ET601
(SM)	3" DEEP, SINGLE GANG BOX SURFACE MOUNTED	1	SEE DETAILS 1/ET601 AND E,F/A423
(CP)	CONTROL PEDESTAL, STUB CONDUITS THROUGH FLOOR	1	SEE DETAILS B,C,D/A421
(A)	3" DEEP, SINGLE GANG BOX MOUNTED IN RECESS FOR ORGAN CONSOLE	1	
(HBTW) (HBRU)	3" DEEP, TRIPLE GANG BOX, MOUNTED ON PULPIT SIDE	OFP	SEE DETAIL 9/TA501
/1	AV EQUIPMENT CABINET W/ 12"x12"x4" METAL JUNCTION BOX RECESSED IN WALL	OFP	CABINET FURNISHED AND INSTALLED BY AV INSTALLER, SEE DETAILS 4/ET601, 8/ET601, 1/TA501
(S)6	SPEAKER ENCLOSURE, SEE DETAIL 5/ET601	OFP	FURNISHED BY DIVISION 27, INSTALLED BY DIVISION 26
(S)M	SPEAKER MOUNTING RING, SEE DETAIL 5/ET601	OFP	FURNISHED BY DIVISION 27, INSTALLED BY DIVISION 26
(S)6	SPEAKER MOUNTING RING, SEE DETAIL 5/ET601	OFP	FURNISHED BY DIVISION 27, INSTALLED BY DIVISION 26
	WALL FIELD, PRE-TREATED PAINTED 0.75" PLYWOOD	OFP	FURNISHED AND INSTALLED BY DIVISION 26. SEE DETAILS 4/ET601 AND 6/ET601
(CM)	3" DEEP, SINGLE GANG BOX MOUNTED IN VERTICAL FACE OF RISER	OFP	
	CAMERA ENCLOSURE	OFP	VADDIO SONY-D80 IN-WALL ENCLOSURE 999-2225-019, APPROXIMATELY +96" AFF, PAINT TO MATCH WALL, FURNISHED BY DIV 27, INSTALLED BY DIV 26
FB	FLOOR BOX, 4 SERVICE, CAST IRON, ARCHITECT TO CHOOSE COLOR OF COVER, SEE DETAIL 3/ET601	1	WIREMOLD RFB4-CI-1 STEEL CITY 665-CI

MANUFACTURER'S NAMES AND TELEPHONE NUMBERS ARE LISTED IN THE SPECIFICATIONS
A/R = AS REQUIRED, OFP = OBTAIN FROM PLANS

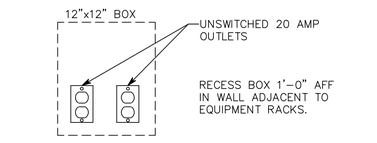

8 AV POWER JUNCTION BOX
NO SCALE /1

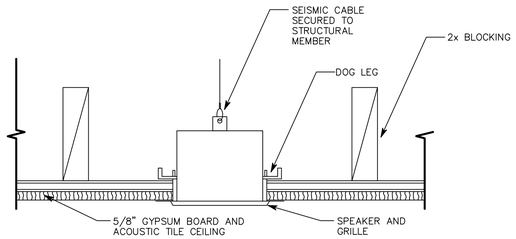

5 SPEAKER SEISMIC DETAIL
NO SCALE

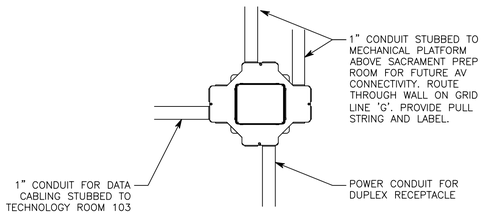

3 HIGH COUNCIL 139 FLOOR BOX DETAIL
NO SCALE FB

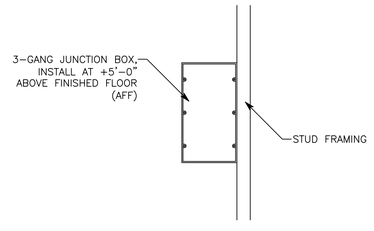

7 CC CONTROL DETAIL
NO SCALE (CC)

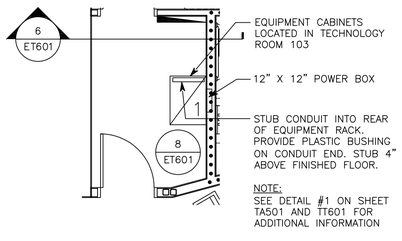

4 EQUIPMENT CABINETS DETAIL
NO SCALE /1/1

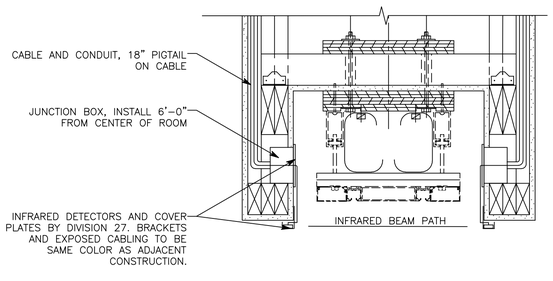

2 HEADER DETAIL (IN CULTURAL CENTER)
NO SCALE (IR)

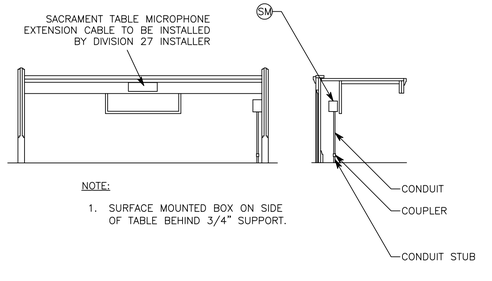

1 SACRAMENT TABLE MICROPHONE DETAIL
NO SCALE (SM)

Architect / Engineer:
BOTT PANTONE ARCHITECTS
630 24TH STREET
OGDEN, UT 84401
BPARCHITECTS.NET
P 801.394.9064
F 801.394.9064

Stamp:

NIBLEY 12 & MENDON UTAH STAKE CENTER
APPROX. 1585 W. 3200 S.
NIBLEY, UTAH

Project for:
THE CHURCH OF JESUS CHRIST OF LATTER-DAY SAINTS

Mark	Date (D-M-Y)	Description
30-OCT-18		BID SET

Project Number: 1770
Plan Series: HET-SDS-09-07
Property Number: 5002240-17-010201

Sheet Title: ELECTRICAL EQUIPMENT LIST & DETAILS

Sheet: ET601

HSDS-ET601.dwg - 10/21/2018 - 1:29 PM

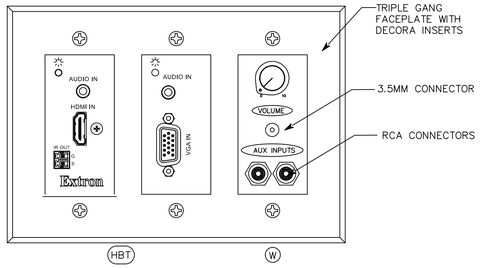

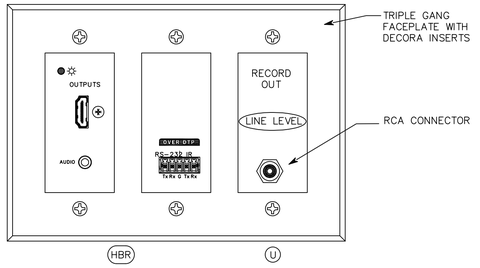

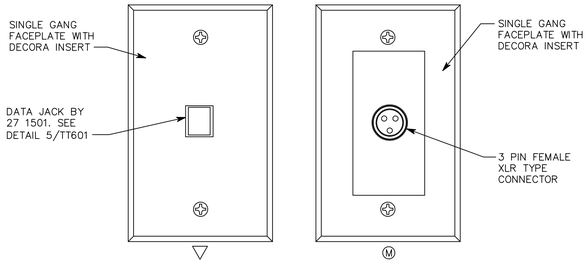

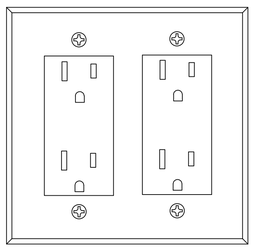

7 PULPIT CONNECTION DETAILS
NO SCALE

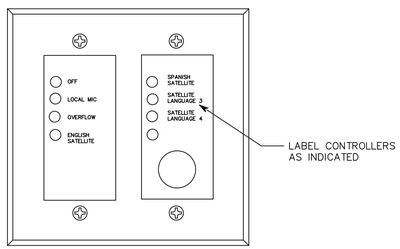

5 KEYPAD CONTROLLER 'SV8'
NO SCALE

SV8

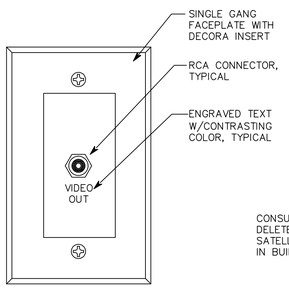

6 COMPOSITE VIDEO OUTLET
NO SCALE

CCV

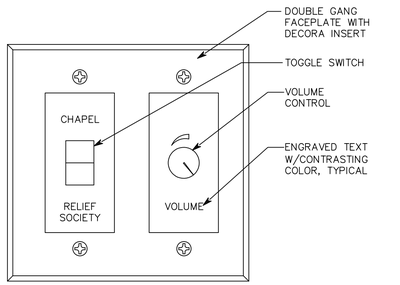

4 MOTHERS ROOM CONTROLLER
NO SCALE

SVM

3 HELP DESK PANEL
NO SCALE

HDP

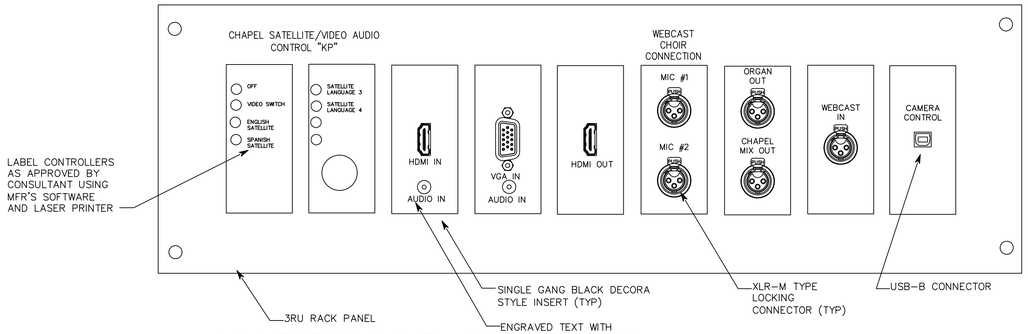

2 CONNECTION PANEL #1
NO SCALE

CP1

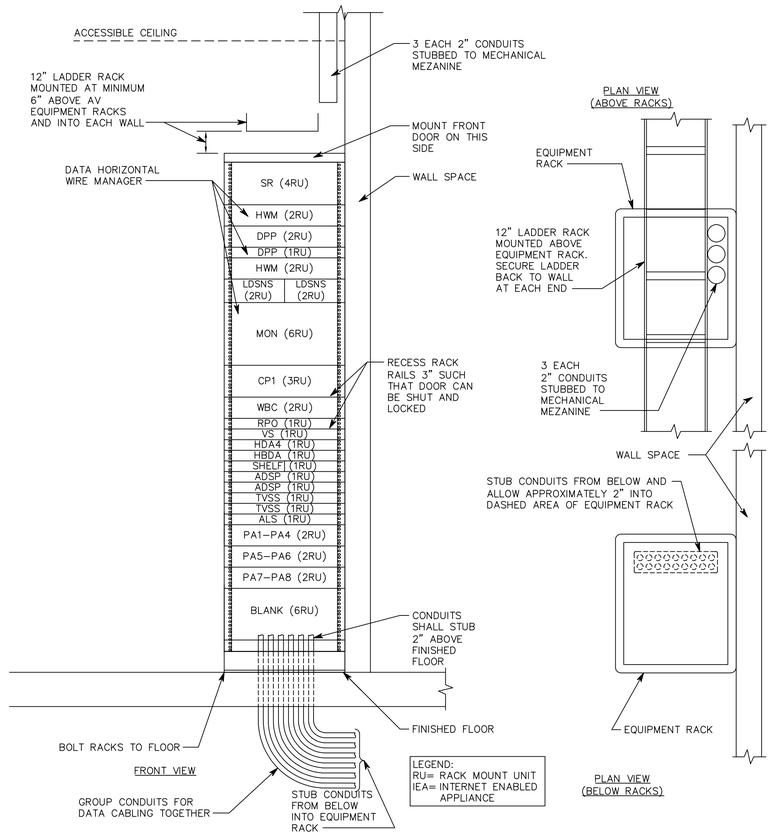

1 EQUIPMENT RACK ELEVATION AND DETAILS
NO SCALE

1

Architect / Engineer:
BOTT PANTONE ARCHITECTS
630 24TH STREET
OGDEN, UT 84401
BPARCH@BOTTS.NET
P 801.394.9064
F 801.394.9064

Stamp:

NIBLEY 12 & MENDON UTAH STAKE CENTER
APPROX. 1585 W. 3200 S.
NIBLEY, UTAH

Project for:
THE CHURCH OF JESUS CHRIST OF LATTER-DAY SAINTS

Mark	Date (M-D-Y)	Description
-	-	-
-	-	-
-	-	-
-	-	-
-	-	-
-	-	-
30-OCT-18	BID SET	

Project Number: 1770
Plan Series: HET-SDS-09-07
Property Number: 5002240-17-010201

Sheet Title: AUDIO, VIDEO, AND CONTROL SYSTEM DETAILS

Sheet: TA501

HSDS-TA501.dwg - 10/21/2018 - 1:29 PM

AUDIO-VIDEO SYSTEM EQUIPMENT LIST

SYM	DESCRIPTION	QTY	ACCEPTABLE TYPES
	12" LADDER RACK W/ WALL AND RACK ATTACHMENTS	A/R	CHATSWORTH 10250-712 MIDDLE ATLANTIC CLB-6
SR	SATELLITE RECEIVER, 1 AUDIO PAIR, 2RU	OFP	CISCO D9865-D-NTSC-NA
GBI	GROUNDING BLOCK, INTERIOR	1	TII TECH 231-1
GBE	GROUNDING BLOCK, EXTERIOR	1	HOLLAND SA-1F
	SATELLITE DISH, Ku-BAND	1	PRODELIN 1.2M, 1132-900 ANTENNA, AND 0800-1421, SINGLE POLE
	LNB, Ku-BAND	1	NORSAT 4605
	STANCHION MOUNT	1	BAIRD MOUNTS BMK-288 X 54-1
	SATELLITE AUDIO INTERFACE	1	EMTECH TTAIB
HDA4	HDMI DISTRIBUTION AMPLIFIER, 4 PORT	OFP	EXTRON HDMI DA4
HBDA	HDBASET DISTRIBUTION AMPLIFIER, 8 PORT	OFP	EXTRON DTP HD HDA8 4K 330
HBT	HDMI HD BASE T WALL TRANSMITTER	OFP	EXTRON DTP T UWP 332D
HBR	HD BASE T WALL RECEIVER	OFP	EXTRON DTP R HWP 4K 331D W/ DECORA BLANK INSERT
HBTW	HDMI HD BASE T WALL TRANSMITTER W/ VGA	OFP	EXTRON DTP T UWP 332 D
	SOUND SYSTEM OUT	OFP	EXTRON MSC-W 3 RU
HBRU	HDMI HD BASE T WALL RECEIVER	OFP	EXTRON DTP R HWP 4K 331D
	SOUND SYSTEM OUT	OFP	EXTRON MSC-U 3 RU
VS	HDMI SWITCHER	OFP	EXTRON IN 1608
HBR2	HD BASE T RACK RECEIVER	OFP	EXTRON DTP HDMI 330 RX
	RACK SHELF	1	EXTRON RSB 123
CCV	VIDEO OUT MODULE	OFP	EMTECH MSC-VO
CP	CHAPEL CONTROL PEDESTAL PLATE, SEE DETAIL B,C,D/A421	OFP	EMTECH BLU-CP IVIE RMI-CPD
CC	CULTURAL CENTER REMOTE CONTROL W/ MIC/ LINE COMBINATION CIRCUIT	OFP	EMTECH-BLU-CCA IVIE RMI-CCD
LDSNS (IEA)	LDS STANDARD NETWORK SWITCH FOR INTERNET ENABLED APPLIANCES. (IEA)		OWNER FURNISHED-INSTALLED BY DIV 271501, SEE DETAIL TT601
LDSFW	LDS STANDARD FIREWALL		OWNER FURNISHED-INSTALLED BY DIV 271501, SEE DETAIL TT601
SV8	SOURCE AND VOLUME REMOTE CONTROL	OFP	BSS EC-8BV IVIE RMI-8
▽ ▽ WAP	DATA OUTLET- FURNISHED AND INSTALLED BY STRUCTURED CABLING CONTRACTOR		SEE TT601
▼	VOICE OUTLET- FURNISHED AND INSTALLED BY STRUCTURED CABLING CONTRACTOR		SEE TT601
MON	FLAT SCREEN TV, 19", FRONT PANEL CONTROLS ACCESSIBLE FROM FRONT WITH RACK MOUNT SHELF OR PANEL APPROPRIATE VESA MOUNT	OFP	SAMSUNG LN19C350 JVC LT-19E610 OR APPROVED EQUIVALENT
	FLAT PANEL WALL MOUNT ATTACHED TO RACK PLATE	1	CHIEF FTRV
MW	MICROPHONE/AUX INPUT MODULE	OFP	EMTECH MSC-MW3
KP	CHAPEL MEDIA SELECTOR KEYPAD	OFP	BSS EC-8BV IVIE RMI-8
S_4	4" LOUDSPEAKER LOUDSPEAKER GRILLE LOUDSPEAKER ENCLOSURE	OFP	COMMUNITY D4 W/D4NCB SOUND TUBE CM42-EZS W/AC-CM4-PCB JBL CONTROL 14C/T W/ MTC-24NC
S_M	4" LOUDSPEAKER		ATLAS SOUND FC104T72 LOWELL JR410-T47O ELECTRO-VOICE 2058T
	LOUDSPEAKER GRILLE	OFP	ATLAS SOUND T720-4BT LOWELL CN-4M
	LOUDSPEAKER ENCLOSURE	OFP	ATLAS SOUND E410-11
S_6	6" LOUDSPEAKER LOUDSPEAKER GRILLE LOUDSPEAKER ENCLOSURE	OFP	COMMUNITY D6 W/D6NCB SOUND TUBE CM62-EZ W/AC-CM6-8EZ-PCB LOWELL ES-62T W/ ES-6-RIB

SYM	DESCRIPTION	QTY	ACCEPTABLE TYPES
	HIGH IMPACT NYLON COVER PLATES FOR ALL DECORA STYLE AV MODULES, NUMBER OF GANGS AS REQUIRED. COLORS TO MATCH NEARBY ELECTRICAL DEVICES	OFP	HUBBELL OR LEVITON
RPO	RACKMOUNT POWER OUTLET, 1 RU RACK PANEL W/ DECORA OPENING, W/ BROWN COVER PLATE AND NEMA 5-15 CONNECTOR	1	MIDDLE ATLANTIC DECP-1X1 W/BROWN DECORA INSERT AND NEMA 5-15R 12VAC 15 AMP RECEPTACLE
M SM	MICROPHONE INPUT MODULE (FOR 'SM', SEE DETAILS 1/ET601 AND E,F/A423)	OFP	EMTECH MSC-M
CM	MICROPHONE INPUT, DUAL, W/ CUSTOM LABEL, SEE DETAIL 6/TA501	OFP	EMTECH MSC-D
A	ORGAN INPUT, CABLE MOUNTED MICROPHONE CONNECTOR	OFP	SWITCHCRAFT A3FB NEUTRIK NC3FX-BAG
	50'-0" MICROPHONE EXTENSION CABLES W/ BLACK CONNECTORS	1	CONQUEST B84-50 WHIRLWIND MK450
	25'-0" MICROPHONE EXTENSION CABLES W/ BLACK CONNECTORS	2	CONQUEST B84-25 WHIRLWIND MK425
	WIRELESS MICROPHONE SYSTEM 10'-0" MICROPHONE EXTENSION CABLE FOR CONNECTION INTO SOUND SYSTEM	1	AUDIO TECHNICA SYSTEM 10 ATW-1101/L W/ ATW-RC2 CASE
	MICROPHONE, GENERAL USE	2	AUDIO-TECHNICA ATM610AS
	MICROPHONE, CHAPEL PULPIT	1	AUDIO-TECHNICA ES905CL
	MICROPHONE, SACRAMENT TABLE	1	IVIE IM-10 EMTECH BLU-SM
	MICROPHONE,GOOSENECK. INSTALL ON PRIMARY ROOM PULPIT WITH METAL PLATE-MOUNTED FEMALE XLR WIRED TO MALE XLR INSIDE PULPIT IN WIREMOLD BOX.	1	AUDIO TECHNICA AT808G W/ CABLE, JUNCTION BOX, AND CONNECTION PLATES
	10'-0" MICROPHONE EXTENSION CABLE W/ BLACK CONNECTORS	1	CONQUEST B84-10 WHIRLWIND MK410
	15'-0" MICROPHONE EXTENSION CABLE W/ BLACK RIGHT ANGLE MALE CONNECTOR FOR PRIMARY ROOM MICROPHONE	1	CONQUEST B84-15 WHIRLWIND MK415
	8'-0" PEDESTRIAN STRIP	2	
	MICROPHONE STAND, FLOOR TYPE	1	ATLAS SOUND MS-20E W/PB21 XEB KONIG AND MEYER 210/9
	MULTI-INPUT ADAPTOR BOX	1	EMTECH EJ-2+
ALS	ASSISTED LISTENING SYSTEM	1	LISTEN LDS-01-01
V	VOLUME CONTROL MODULE	OFP	EMTECH MSC-V10 OR V35 AS APPROPRIATE FOR SPEAKER LOAD
SVM	SOURCE AND VOLUME CONTROL	OFP	EMTECH MSC-S WITH EMTECH MSC-V10 WITH SPECIAL LABELING ACCORDING TO DETAIL 4/TA501
IR	INFRARED DETECTORS COVER CABLE W/ LIGHT COLORED TUBING	OFP	IVIE RMI-IR3 BSS BLU-IR
	INSTALLED HDMI INTERCONNECT CABLE, 3'	A/R	HDMI HIGH SPEED
	INSTALLED HDMI INTERCONNECT CABLE, 6'	A/R	
	HDMI CABLE, 15 FEET, FOR OWNER	2	
	HDMI CABLE, 50 FEET, FOR OWNER	1	
	AV EQUIPMENT CABINET, 1 FRAME, 1 LADDER TOP, 1 FRONT DOOR, 1 BACK DOOR, 1 SIDE, AND REAR RACK RAILS	OFP	MIDDLE ATLANTIC MRK-4426-Z4 WITH VFD-44, SPN-44, MW-LA, MW-LVRD-44 ATLAS SOUND 744-25/ SBK-700/ MPFD44/ SPS44-25/ 544-25-MPRD
	DRAWER	1	MIDDLE ATLANTIC UD3 ATLAS SOUND SD3-14
	SHELF	1	MIDDLE ATLANTIC SSL LOWELL RSD-116
ADSP	AUDIO MIXER, DIGITAL SIGNAL PROCESSOR W/ POWER SUPPLY, I/O MODULES, RELAYS, AND ACCESSORIES AS REQUIRED. WITH MANUFACTURER'S DRAWING SHOWING DETAILED WIRING CONNECTIONS FOR THIS DESIGN.	A/R	BSS BLU-100 IVIE 1280 W/ LDS RELAY CARD
(CIF)	CONTROL INTERFACE	A/R	BSS BLU-CIF2 IVIE RMPC-6
	TVSS/ADSP RELAY INTERFACE	A/R	24 VDC RELAY, POWER SUPPLY AND BASE
PA	POWER AMPLIFIERS PA1-PA4 (4 x 200 WATT)	OFP	QSC 204V CROWN DCI 4300
	PA5-PA8 (35 WATT)	OFP	ATLAS SOUND PA40G/ PA702RMK TOA BA-235/ MB-25B-BK CROWN 135MA/ RMI
	SECURITY COVER FOR PA5-PA8	A/R	MIDDLE ATLANTIC SECS-2 W/ HTX SCREWS, OR EQUIVALENT
	CAMERA, PTZ, 1CCD, WHITE W/ ENCLOSURE	OFP	SONY EVI-D80 W/ VADDIO 999-2225-019

SYM	DESCRIPTION	QTY	ACCEPTABLE TYPES
HDP	HELP DESK PANEL, 1 RU	1	CUSTOM LABELING, SEE DETAIL 3/TA501
STS	STANDARD TERMINAL STRIP	OFP	
	LINE TRANSFORMER	A/R	RDL TX-1A PRO CO LOT-1
TVSS	SURGE SUPPRESSOR AND SWITCHER IP ENABLED W/ UL LISTED PLUG STRIP	OFP	SURGEX SX-AX15E MIDDLE ATLANTIC RLINK-SW815R-SP
	POWER STRIP, UL LISTED	A/R	6 OUTLET POWER STRIP OR EQUAL
CP1	CONNECTION PANEL #1	OFP1	LOWELL D9P-ID-3 OR AS APPROVED CUSTOM HDMI INPUT CUSTOM HDMI OUTPUT CUSTOM VGA INPUT CUSTOM XLR INPUT *CUSTOM DEVICES MUST BE FABRICATED ON METAL DECORA INSERTS AS SHOWN ON 2/TA501
WBC	LDS WEBCAST COMMUNICATOR	OFP	OWNER FURNISHED, CONTRACTOR INSTALLED
	SHELF, 2 RU	OFP	MIDDLE ATLANTIC U2

MANUFACTURER'S NAMES AND TELEPHONE NUMBERS ARE LISTED IN THE SPECIFICATIONS
A/R = AS REQUIRED, OFP = OBTAIN FROM PLANS

GENERAL PROJECT NOTES

1. NO CHANGES SHALL BE MADE WITHOUT THE PROJECT ACOUSTICAL AND TECHNOLOGY CONSULTANT'S WRITTEN CONSENT.
2. REFER TO DRAWINGS FOR EXACT NUMBER OF COMPONENTS USED IF NOT SPECIFIED IN EQUIPMENT LIST.
3. SEE 'ET' SHEETS FOR DEVICE LOCATIONS AND COORDINATION.
4. SEE SHEET TT601 FOR ADDITIONAL COORDINATION.
5. SECURE ALL LOUDSPEAKER ASSEMBLIES WITH SEISMIC RESTRAINTS. MOUNT ALL LOUDSPEAKER ASSEMBLIES IN SUSPENDED TILE CEILINGS ON TILE BRIDGES EVEN IF NOT SHOWN IN EQUIPMENT LIST.

GENERAL SHEET NOTES

1. CONNECT CHAPEL AND ROSTRUM SPEAKERS TOGETHER AT TERMINAL STRIP IN RACK. DISCONNECT CHAPEL SPEAKERS FOR FOLDING PARTITION TESTING.
2. IF SATELLITE IS INCLUDED AIM DISH AND PROGRAM RECEIVER FOR SATELLITE CURRENTLY IN USE BY THE CHURCH. CALL (801)240-3454 TO INITIALIZE SATELLITE RECEIVER. THIS MUST BE DONE OR RECEIVER WILL NOT ACQUIRE PROGRAMS.
3. UNLESS OTHERWISE NOTED, MODULES SHALL BE PURCHASED FROM MANUFACTURER LISTED, NOT CUSTOM MADE. COLOR OF INSERTS AND COVER PLATES TO MATCH ELECTRICAL DEVICES.
4. 'TVSS' DEVICES CAN PROVIDE EMAIL NOTIFICATION WHEN POWER AND TEMPERATURE THRESHOLDS ARE EXCEEDED. SET EMAIL NOTIFICATIONS TO BE SENT TO FM PROVIDED EMAILS ADDRESS WHEN MANUFACTURE RECOMMENDED POWER AND TEMPERATURE LIMITS ARE EXCEEDED.
5. FURNISH SPEAKER ENCLOSURES AND TRIM RINGS TO DIVISION 26 INSTALLER FOR INSTALLATION.
6. REFER TO A SHEETS FOR COORDINATION OF ITEMS MOUNTED IN WOOD MILLWORK.

Architect / Engineer:
BOTT PANTONE ARCHITECTS
630 24TH STREET
OGDEN, UT 84401
BPARCH@ BOTTS.NET
P 801.394.9064
F 801.394.9064

Stamp:

NIBLEY 12 & MENDON UTAH STAKE CENTER
APPROX. 1585 W. 3200 S.
NIBLEY, UTAH

Project for:
THE CHURCH OF JESUS CHRIST OF LATTER-DAY SAINTS

Mark	Date (DAY)	Description
30-OCT-18		BID SET

Project Number: 1770
Plan Series: HET-SDS-09-07
Property Number: 5002240-17-010201

Sheet Title: AUDIO-VIDEO SYSTEM EQUIPMENT LIST AND NOTES

Sheet: TA601

HSDS-TA601.dwg - 10/21/2018 - 1:28 PM

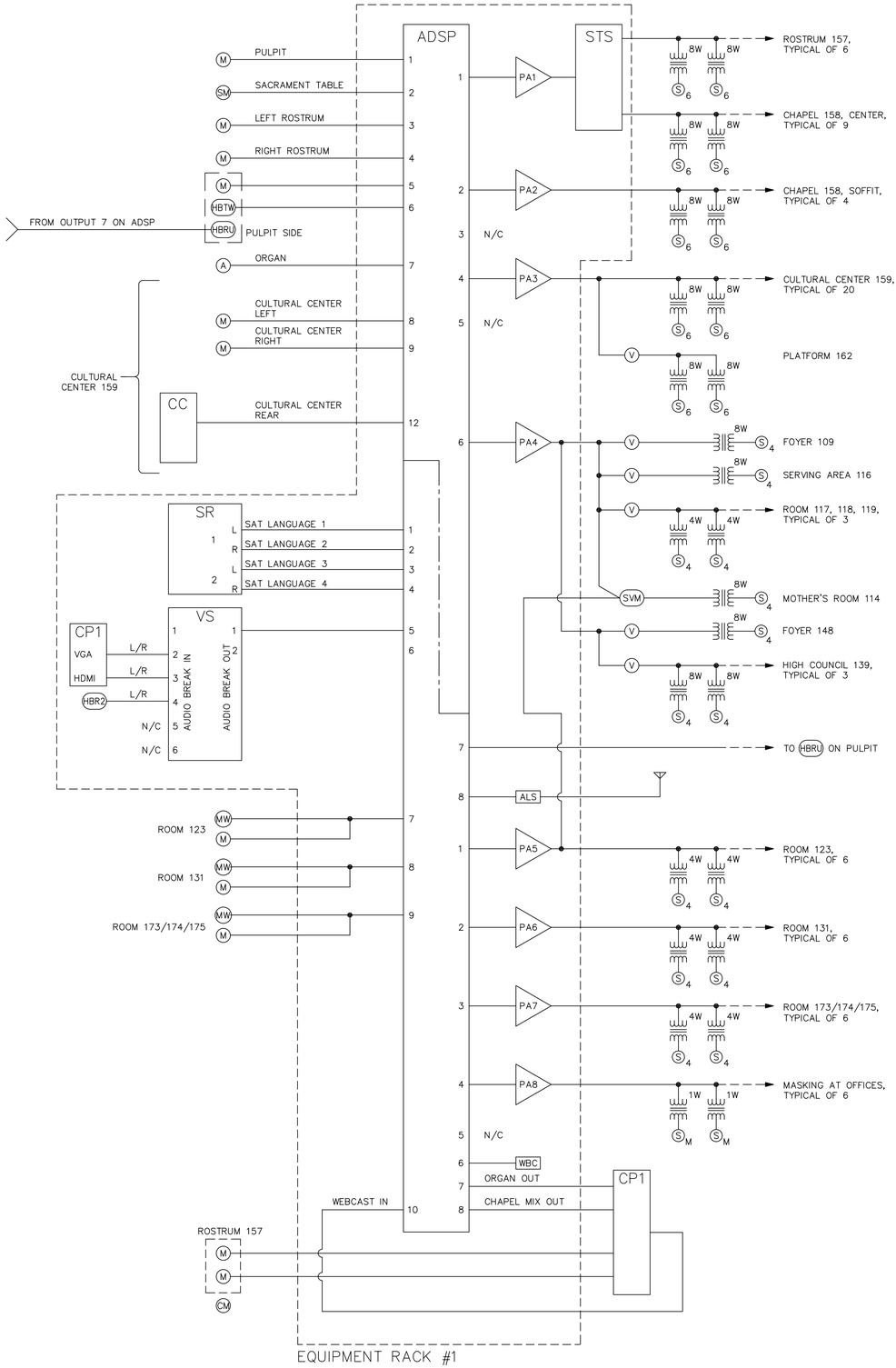

AUDIO SYSTEM RISER DIAGRAM

NO SCALE

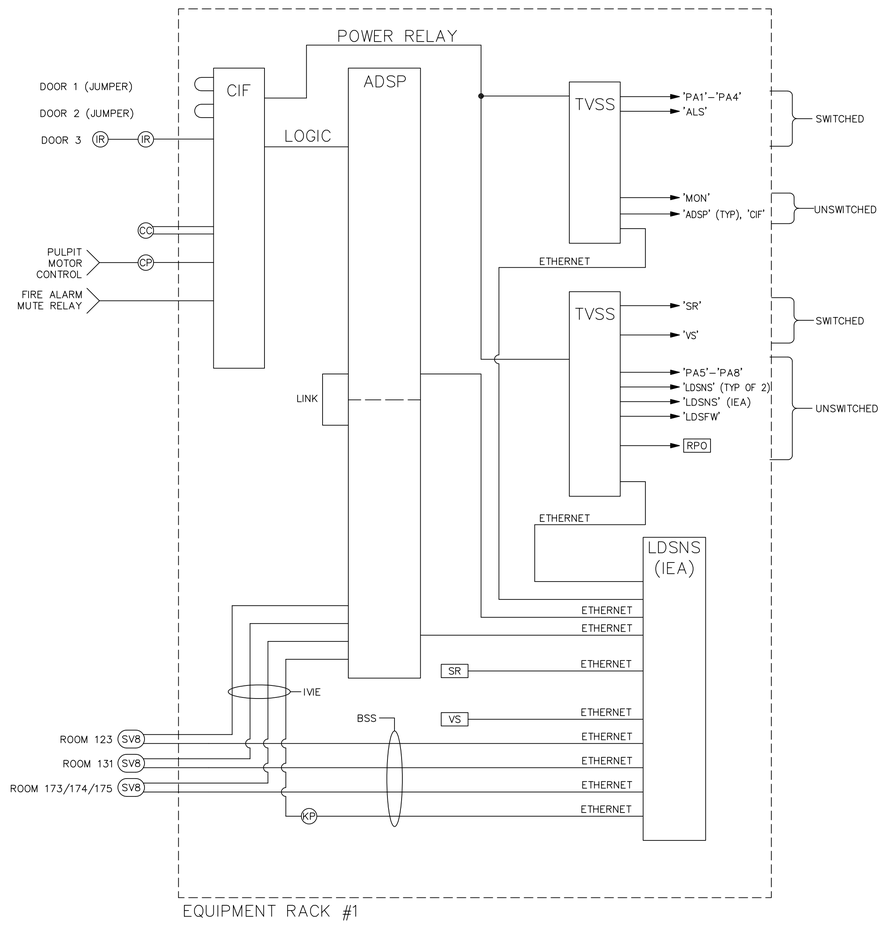

CONTROL/LOGIC RISER DIAGRAM

NO SCALE

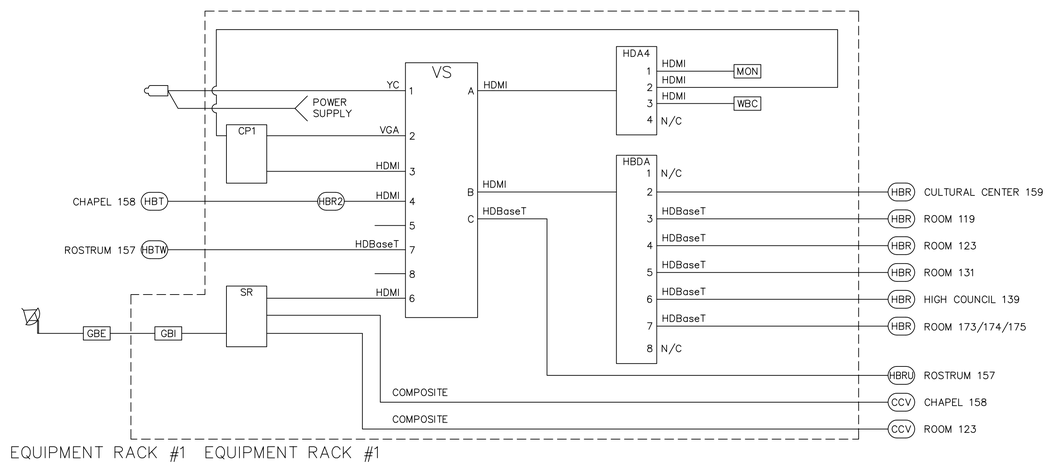

VIDEO SYSTEM RISER DIAGRAM

NO SCALE

GENERAL SHEET NOTES

1. WHERE MULTIPLE DEVICES ARE SHOWN ON A SINGLE 'TVSS' OUTLET, PROVIDE PLUG STRIPS AS REQUIRED.
2. BSS SV8 CONTROLLER MUST BE CONNECTED TO POE PORTS.
3. HDBASE T AND BSS DEVICES ARE IP COMMUNICATIONS PROTOCOL DEVICES. TWISTED PAIR CABLES MUST MEET STANDARDS DEFINED IN THE HORIZONTAL COMMUNICATIONS SPECIFICATIONS.
4. N/C INDICATES NO CONNECTION.
5. ADSP AND CONTROL/LOGIC WIRING IS GENERIC. SEE MANUFACTURER'S INSTRUCTION SHEET FOR WIRING DETAILS.
6. REFER TO SPECIFICATIONS FOR IP ADDRESS ASSIGNMENTS.

Architect / Engineer:
BOTT PANTONE ARCHITECTS
630 24TH STREET
OGDEN, UT 84401
BPARCH@BOTTS.NET
P 801.394.9064
F 801.394.9064

Stamp:

NIBLEY 12 & MENDON UTAH STAKE CENTER

APPROX. 1585 W. 3200 S.
NIBLEY, UTAH

Project for:
THE CHURCH OF JESUS CHRIST OF LATTER-DAY SAINTS

Mark	Date (DAY)	Description
-	-	-
-	-	-
-	-	-
-	-	-
-	-	-
-	-	-
-	-	-
30-OCT-18		BID SET

Project Number: 1770
Plan Series: HET-SDS-09-07
Property Number: 5002240-17-010201

Sheet Title: AUDIO, VIDEO, AND CONTROL SYSTEM RISER DIAGRAMS

Sheet: TA602

HSDS-TA602.dwg - 10/27/2018 - 1:28 PM

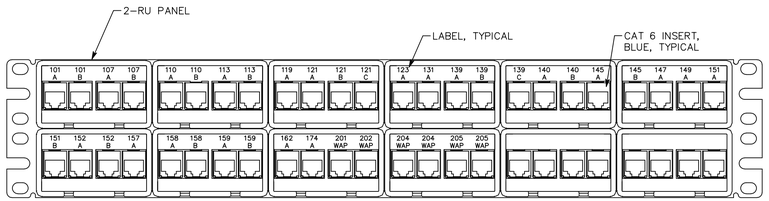

1-RU PANEL = 1 RACK UNIT (1.75")

NOTE:

NUMBER SHOWN MATCHES DESIGN ROOM NUMBERS. FINAL LABELING FOR PATCH PANEL AND OUTLETS SHALL MATCH SIGNAGE POSTED FOR ROOMS.

1 PATCH PANEL DETAIL, 48-PORT, TYPICAL

NO SCALE

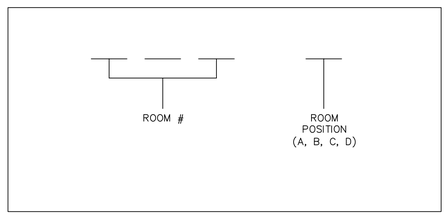

2 CABLE LABEL DETAIL

NO SCALE

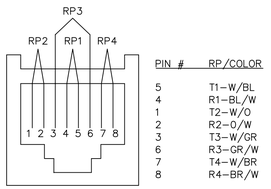

PIN #	RP/COLOR
5	T1-W/BL
4	R1-BL/W
1	T2-W/O
2	R2-O/W
3	T3-W/GR
6	R3-GR/W
7	T4-W/BR
8	R4-BR/W

3 OUTLET PINNING DETAIL

NO SCALE

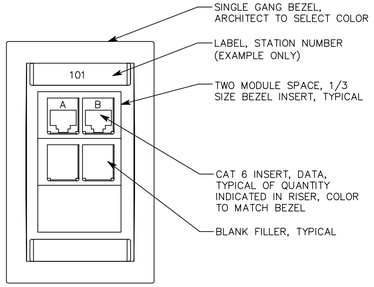

5 TYP VOICE-DATA OUTLET

NO SCALE

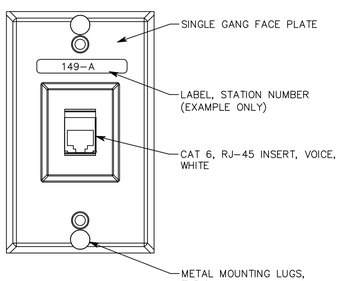

6 WALL PHONE DETAIL, HALLWAY 149

NO SCALE

GENERAL PROJECT NOTES

1. LABEL ALL CABLE REGARDLESS OF LENGTH.
2. THE EQUIPMENT LABELING IDENTIFIED ON DETAILS IN THESE DRAWINGS ARE EXAMPLES ONLY. PRIOR TO FABRICATION, SUBMIT THE NOMENCLATURE FOR ALL CABLING AND EQUIPMENT TO THE CONSULTANT APPROVAL.
3. COIL 5' OF EXTRA CABLE AT THE TECHNOLOGY ROOM AND 18"' AT THE OUTLET FOR EACH CABLE RUN.
4. USE CADDY CLIPS OR BRIDLE RINGS FOR ALL CABLE OUTSIDE OF CONDUIT. GENERAL PROJECT NOTES ET601.
5. ALL CABLE AND UTP TO TERMINATE ON BOTH ENDS.
6. ALL VOICE-DATA OUTLETS ON WALLS SHALL BE MOUNTED WITHIN 6" OF A POWER OUTLET. IF CONTRADICTIONS ARISE ON PLANS, NOTIFY ENGINEER.
7. REFER TO SHEET ET101 AND ET102 FOR VOICE-DATA JACK LOCATIONS AND ROUTING OF AV CABLE.
8. EQUIPMENT RACK TO BE INSTALLED BY AV INSTALLER.
9. ALL VOICE-DATA CABLING AND EQUIPMENT SHALL BE INSTALLED ACCORDING TO DIVISION 27 1501.
10. INSTALL OWNER FURNISHED LDS NETWORK EQUIPMENT SHOWN. AS PART OF INSTALLATION SET UP AND CONFIGURE DEVICES IN ACCORDANCE WITH LDS REQUIREMENTS. COORDINATE WITH LOCAL FACILITIES MANAGER.
11. COORDINATE WITH FACILITIES MANAGER AND PROJECT MANAGER WELL IN ADVANCE OF PROJECT COMPLETION TO ENSURE INSTALLATION OF ALL OWNER FURNISHED EQUIPMENT IS INSTALLED AND SET UP PROPERLY. IN ADDITION, ENSURE OWNER PROVIDES INTERNET SERVICE TO BUILDING PRIOR TO FINAL INSTALLATION OF AV AND VOICE DATA EQUIPMENT.
12. INSTALL A DATA PATCH CABLE TO LDSNS FOR ALL DATA LOCATIONS SHOWN ON PLANS.
13. FURNISH AND INSTALL ALL AUDIO-VIDEO CABLE SHOWN. PROVIDE 3' EXTRA CABLE AT OUTLET END AND 15' EXTRA CABLE AT EQUIPMENT RACK. COIL AND LABEL.
14. INSTALL PATCH IN AND SET-UP OWNER FURNISHED WIRELESS ACCESS POINTS.
15. SEE "TA" AND "ET" SHEETS FOR DEVICE LOCATIONS AND ADDITIONAL COORDINATION.

VOICE-DATA SYSTEM EQUIPMENT/CABLE LIST

THE FOLLOWING IS A PARTIAL LIST OF MATERIALS FOR THE DATA/PHONE SYSTEM. REFER TO SPECIFICATION 27 1501 FOR FULL REQUIREMENTS. VERIFY ALL PART NUMBERS WITH MANUFACTURER'S CATALOG NUMBERS AND NOTIFY CONSULTANT OF DISCREPANCIES PRIOR TO BIDDING. FURNISH MISCELLANEOUS HARDWARE NOT LISTED TO PROVIDE A COMPLETE SYSTEM.

SYM	DESCRIPTION	ACCEPTABLE TYPES
TELCO DEMARC	TELECOMMUNICATIONS PROVIDER DEMARCATION POINT	FURNISHED AND INSTALLED BY PROVIDER
ISP DEMARC	INTERNET SERVICE PROVIDER DEMARCATION POINT	FURNISHED AND INSTALLED BY PROVIDER
DPP	PATCH PANEL, DATA, 48-PORT W/ CAT 6 INSERT, BLUE (QUANTITIES OF PORTS AS REQUIRED +25%)	SEE SPECIFICATION 271501
TVSS	SURGE SUPPRESSOR AND SWITCHER W/ UL LISTED PLUG STRIP	FURNISHED AND INSTALLED BY AV INSTALLER
	UL LISTED POWER STRIP	6 OUTLET POWER STRIP OR EQUAL
D(#)	STATION CABLE, DATA-CAT 6, DATA, BLUE JACKET (#) INDICATES NUMBER OF CABLES IF MORE THAN ONE	SEE SPECIFICATION 271501
WAP ▽	DATA OUTLET, WIRELESS ACCESS POINT SINGLE GANG BEZEL	SEE SPECIFICATION 271501 SEE DETAIL 10/ET601
	BEZEL INSERTS	SEE SPECIFICATION 271501
	CAT 6 JACK-DATA (1)	SEE SPECIFICATION 271501
▼	VOICE OUTLET SINGLE GANG BEZEL (SEE DETAIL 6/TT601 FOR WALL MOUNT PHONE)	SEE SPECIFICATION 271501
	BEZEL INSERTS	SEE SPECIFICATION 271501
	CAT 6 JACK-DATA (1)	SEE SPECIFICATION 271501
▽	DATA OUTLET SINGLE GANG BEZEL	SEE SPECIFICATION 271501
	BEZEL INSERTS	SEE SPECIFICATION 271501
	CAT 6 JACK-DATA (1)	SEE SPECIFICATION 271501
	COPPER CAT 6 PATCH CABLES	SEE SPECIFICATION 271501
	CAT 6 J-HOOKS	CADDY CAT32Z34
HWM	HORIZONTAL WIRE MANAGER HORIZONTAL WIRE MANAGER SHALL NOT HAVE A DEPTH OF MORE THAN 3". SEE DETAIL 1/TA501	SEE SPECIFICATION 271501
LDSNS (IEA)	NETWORK SWITCH, LDS STANDARD (IEA-IS FOR INTERNET ENABLED APPLIANCES)	OWNER FURNISHED-CONTRACTOR INSTALLED
IRC	IRRIGATION REMOTE CONNECTION	FURNISHED AND INSTALLED BY IRRIGATION CONTRACTOR
BMG	BUILDING MANAGEMENT GATEWAY	FURNISHED AND INSTALLED BY MECHANICAL CONTROLS CONTRACTOR
LDSFW	INTERNET FIREWALL, LDS STANDARD. SEE DETAIL 10/ET601. PROVIDE WALL BRACKET INDICATED ON DETAIL.	OWNER FURNISHED-CONTRACTOR INSTALLED
ISP MODEM	INTERNET SERVICE MODEM	OWNER FURNISHED-CONTRACTOR INSTALLED
110 BLOCK	110 PUNCH DOWN BLOCK, CAT6	SEE SPECIFICATIONS 271501
LDSWAP	WIRELESS ACCESS POINT. LDS STANDARD. INSTALL AT EACH 'WAP' LOCATION SHOWN ON ET102. PROVIDE WALL BRACKET AS SHOWN ON DETAIL 10/ET601.	OWNER FURNISHED-CONTRACTOR INSTALLED
FB	DATA OUTLET BEZEL COMPATIBLE WITH FLOOR BOX, SEE ET601	SEE SPECIFICATIONS 271501
	BEZEL INSERTS	SEE SPECIFICATIONS 271501
	CAT 6 JACK-DATA (2)	SEE SPECIFICATIONS 271501

NOTE: ALL PATCH PANELS AND ACCESSORIES SHALL BE BLACK IN COLOR

AUDIO-VIDEO CABLE EQUIPMENT LIST

SYM	DESCRIPTION	QTY	ACCEPTABLE TYPES
B(X)	VIDEO DISTRIBUTION CABLE, OUTDOOR, UV RATED, (X) INDICATES NUMBER OF CABLES, IF MORE THAN ONE	A/R	BELDEN 1532A WEST PENN 6140 OR AS APPROVED BY CONSULTANT
C(X)	CONTROL CABLE, WHITE JACKET (X) INDICATES NUMBER OF CABLES, IF MORE THAN ONE	A/R	BELDEN 1872A WEST PENN 4246 LIBERTY 24-4P-L6-EN OR AS APPROVED BY CONSULTANT
L(X)	LINE LEVEL CABLE, (X) INDICATES NUMBER OF CABLES, IF MORE THAN ONE	A/R	BELDEN 9451 WEST PENN 454 LIBERTY 22-1P-EZ OR AS APPROVED BY CONSULTANT
H(X)	HDBASE T CABLE, BLACK JACKET, (X) INDICATES NUMBER OF CABLES, IF MORE THAN ONE	A/R	WEST PENN 4246AF COMMSCOPE 1291B F/UTP OR AS APPROVED BY CONSULTANT
M(X)	MICROPHONE CABLE, (X) INDICATES NUMBER OF CABLES, IF MORE THAN ONE	A/R	LIBERTY 22-1P-EZ BELDEN 9451 WEST PENN 454 OR AS APPROVED BY CONSULTANT
S(X)	SPEAKER CABLE, (X) INDICATES NUMBER OF CABLES, IF MORE THAN ONE	A/R	BELDEN 8471 WEST PENN 225 LIBERTY 16-2C-GRY OR AS APPROVED BY CONSULTANT
V(X)	VIDEO DISTRIBUTION CABLE, RG-6, (X) INDICATES NUMBER OF CABLES, IF MORE THAN ONE	A/R	WEST PENN 841 BELDEN 5399B5 LIBERTY RG6-CM-BLK OR AS APPROVED BY CONSULTANT

MANUFACTURER'S NAMES AND TELEPHONE NUMBERS ARE LISTED IN THE SPECIFICATIONS
A/R = AS REQUIRED

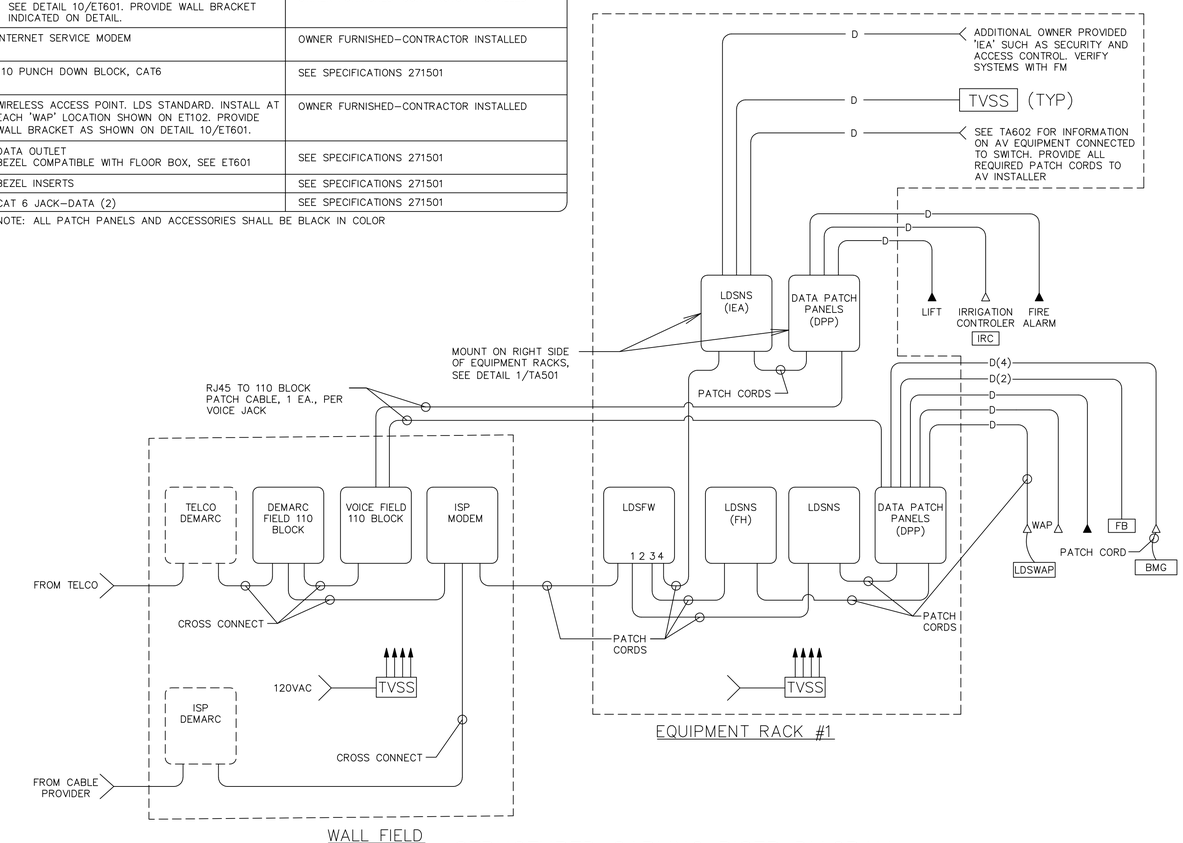

STRUCTURED CABLING RISER DIAGRAM

Architect / Engineer:
BOTT PANTONE ARCHITECTS
620 24TH STREET
OGDEN, UT 84401
BPARCH@ETECTS.NET
P 801.394.9064
F 801.394.9064

Stamp:

NIBLEY 12 & MENDON UTAH STAKE CENTER
APPROX. 1585 W. 3200 S.
NIBLEY, UTAH

Project for:
THE CHURCH OF JESUS CHRIST OF LATTER-DAY SAINTS

Mark	Date (D-M-Y)	Description
-	-	-
-	-	-
-	-	-
-	-	-
-	-	-
-	-	-
30-OCT-18		BID SET

Project Number: 1770
Plan Series: HET-SDS-09-07
Property Number: 5002240-17-010201

Sheet Title: VOICE-DATA NOTES, DIAGRAM, DETAILS AND SCHEDULE

Sheet: TT601

HSDS-TT601.dwg - 10/21/2018 - 1:31 PM

FIRE DETECTION SYMBOLS

- FACP — FIRE ALARM CONTROL PANEL
- F — MANUAL STATION
- HEAT DETECTOR
- SPEAKER/STROBE WITH 15cd STROBE (HIGHER OUTPUT STROBES AS NOTED ON DRAWINGS)
  AUDIBLE VOICE ALARM ANNUNCIATION: ALARM SIGNAL SHALL BE ANNUNCIATED BY AUDIBLE VOICE EVACUATION MESSAGE. MESSAGE SHALL BE DIGITALLY RECORDED WITH MESSAGE CONTENT MEETING REQUIREMENTS OF THE NFPA AND LOCAL AUTHORITY. MESSAGE SHALL BE FIELD PROGRAMMABLE AND RETAINED IN MEMORY IF POWER IS INTERRUPTED.
- WP — WEATHERPROOF HORN/STROBE WITH 15cd STROBE (HIGHER OUTPUT STROBES AS NOTED ON DRAWINGS)
- 15cd STROBE ONLY
- EOL — END OF LINE WIRING DEVICE
- FS — WATER FLOW SWITCH
- TS — VALVE TAMPER SWITCH
- LT — LOW TEMPERATURE SENSOR
- D — DUCT SMOKE DETECTOR (BY DIV 23). (COORDINATE CONNECTIONS WITH THE MECHANICAL CONTRACTOR)
- WP — DEVICE DESIGNED FOR OUTDOOR USE
- PIV — POST INDICATOR VALVE (COORDINATE LOCATION WITH FIRE SPRINKLER CONTRACTOR)

NOTES

1. WIRING FROM DIFFERENT ANNUNCIATION AND INITIATING DEVICES LOOPS MAY BE COMBINED IN A COMMON CONDUIT. FOLLOW NEC REQUIREMENTS FOR FILL.
2. COORDINATE FIRE ALARM DEVICES WITH LIGHTING FIXTURES, SPEAKERS, GRILLS, ETC.
3. DO NOT INSTALL SMOKE DETECTORS WITHIN 3' OF ANY MECHANICAL GRILL.
4. NON-POWER LIMITED AND POWER LIMITED WIRING SHALL BE SEPARATED IN FACP.
5. PERMANENTLY IDENTIFY LOCATION OF CIRCUIT BREAKER FEEDING FACP AND PROVIDE RED MARKING ON CIRCUIT BREAKER.
6. PROVIDE PROTECTIVE WIRE GUARD ON DEVICES NOTED.
7. SEE L/FS501 FOR LOCATIONS OF DEVICES.
8. PROVIDE CONNECTION FOR FIRE SPRINKLER SYSTEM EXTERNAL BELL/HORN STROBE. SEE L/FS501.
9. PROVIDE FLUSH MOUNT STI LEXAN COVER.
10. ALL STROBES SHALL BE SYNCHRONIZED PER ALL ADA REQUIREMENTS.
11. FURNACES AS SHOWN ON DRAWINGS SHALL SHUTDOWN UPON GENERAL ALARM. PROVIDE ALL REQUIRED CONNECTIONS NECESSARY FOR SHUTDOWN. COORDINATE ALL WORK AND CONTROL CONNECTIONS WITH THE MECHANICAL CONTRACTOR.
12. INTELLIGIBLY CALCULATIONS FOR THIS PLAN ARE BASED ON SYSTEM SENSOR #SPV SPEAKERS. SUCCESSFUL FIRE ALARM SYSTEM SUPPLIER SHALL SHOW ON INSTALLATION DRAWING COMPLIANCE CALCULATIONS PER ALL NFPA REQUIREMENTS.
13. TO A/V SYSTEM. A/V SYSTEM SHALL MUTE UPON ALARM. COORDINATE ALL WORK AND REQUIREMENTS WITH THE A/V SYSTEM INSTALLER.
14. ALL FIRE ALARM CABLE THAT IS SUBJECT TO DAMAGE SHALL BE INSTALLED IN CONDUIT (ATTIC, EQUIPMENT PLATFORM, ABOVE SUSPENDED CEILINGS, ETC).
15. WHERE FIRE ALARM IS NOT RUN IN CONDUIT (SEE NOTE #14), CABLING SHALL BE RUN PERPENDICULAR AND PARALLEL TO SURFACES OF STRUCTURAL MEMBERS, AND FOLLOW SURFACE CONTOURS WHERE POSSIBLE.
16. DO NOT CONNECT, MOUNT OR SUPPORT ANY FIRE ALARM CABLING FROM DATA/COMM MOUNTING OR WIRE MANAGEMENT.

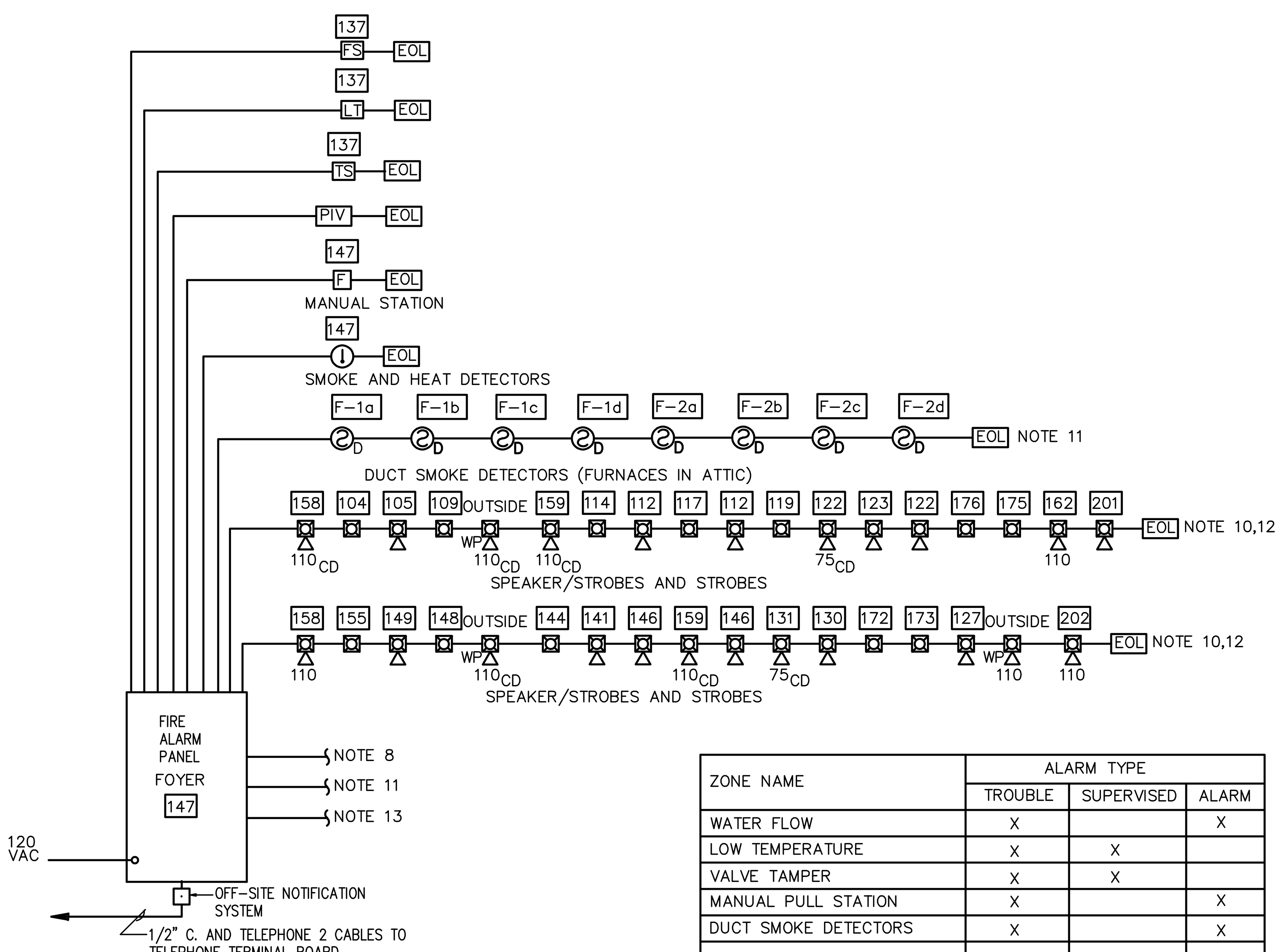

FIRE ALARM DIAGRM
NOT TO SCALE

ZONE NAME	ALARM TYPE		
	TROUBLE	SUPERVISED	ALARM
WATER FLOW	X		X
LOW TEMPERATURE	X	X	
VALVE TAMPER	X	X	
MANUAL PULL STATION	X		X
DUCT SMOKE DETECTORS	X		X

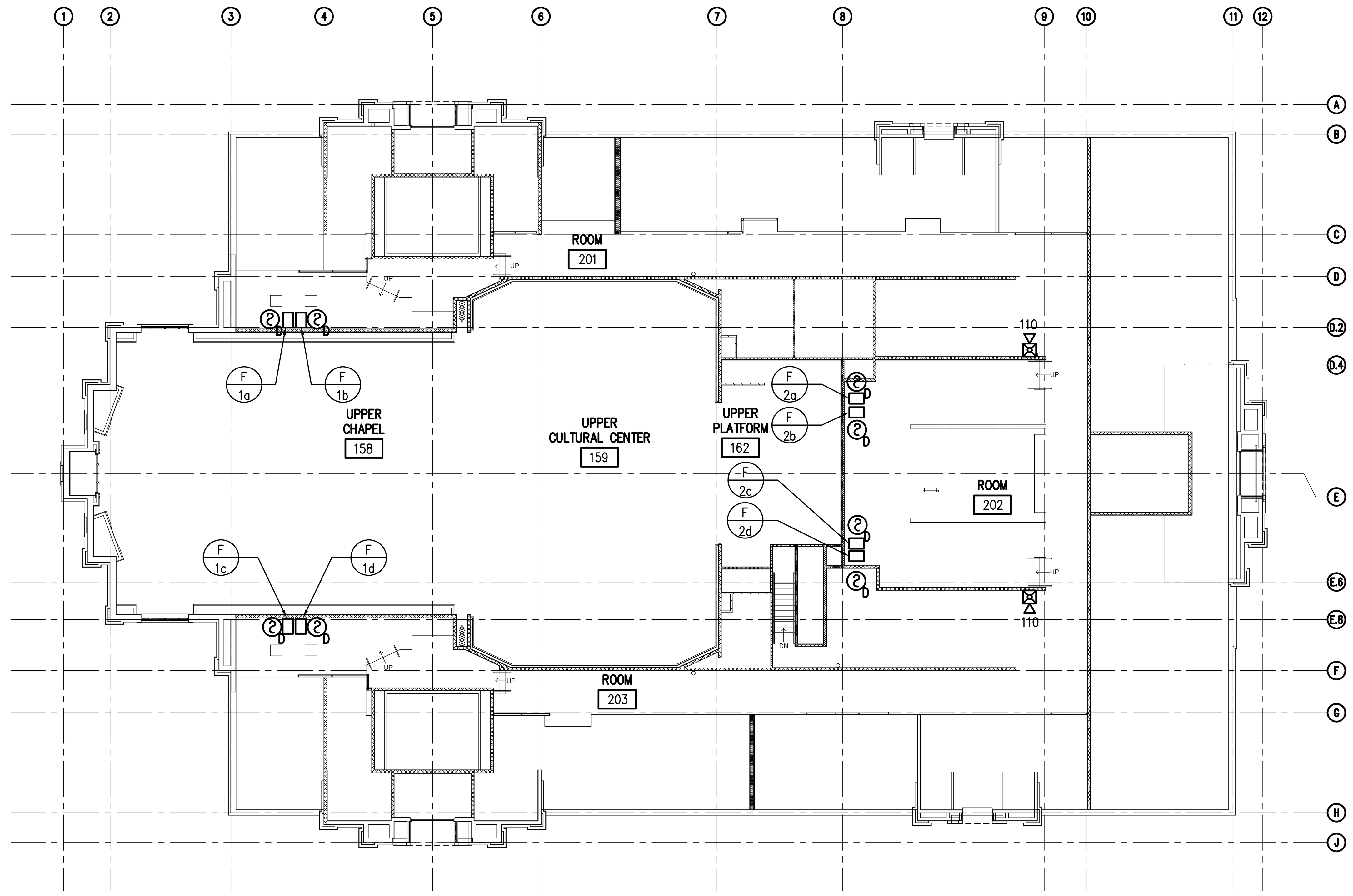

2 EQUIPMENT PLATFORM FIRE ALARM PLAN
1/16" = 1'-0"

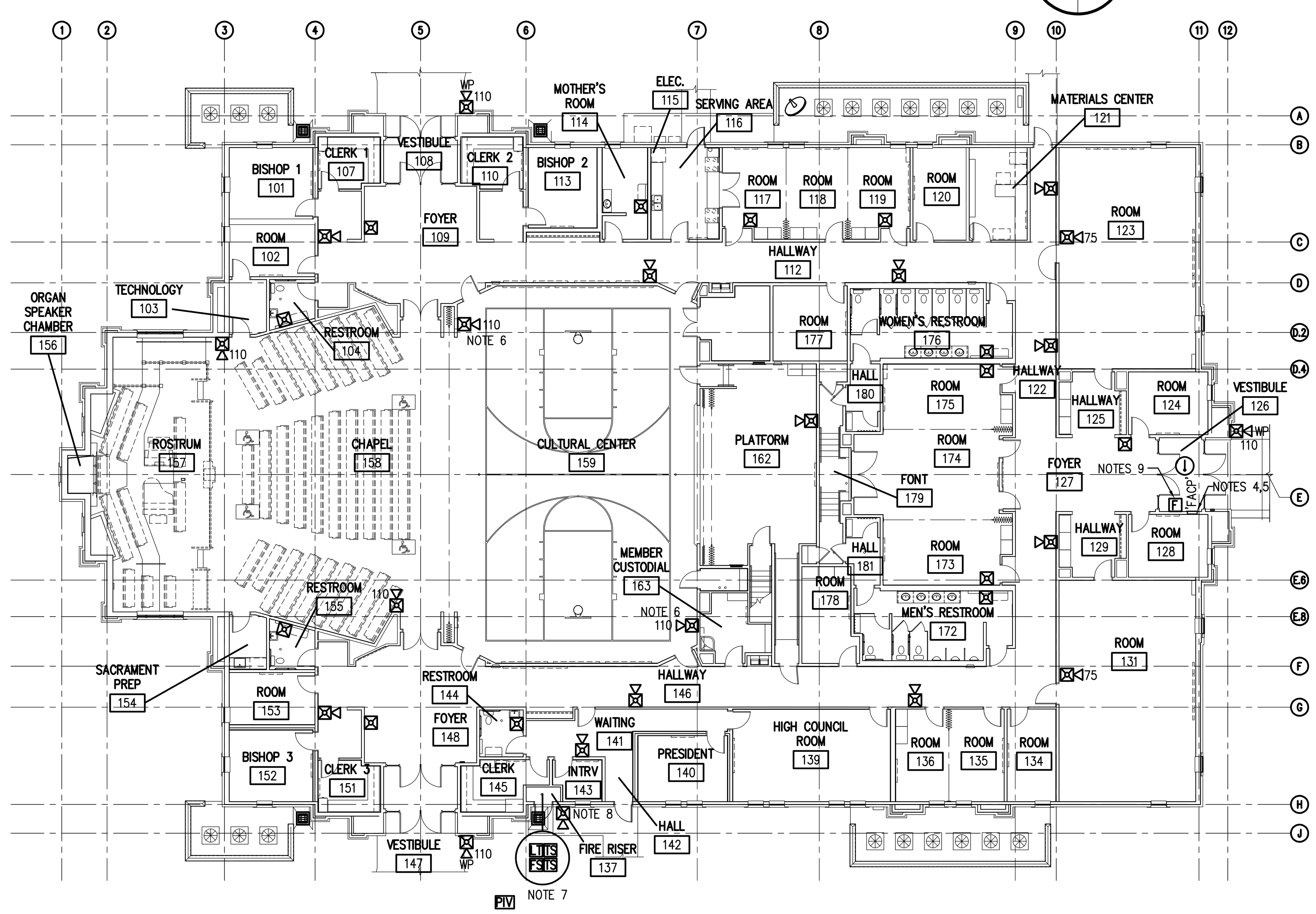

1 MAIN LEVEL FIRE ALARM PLAN
1/16" = 1'-0"

Architect / Engineer:
BOTT PANTONE ARCHITECTS
620 24TH STREET
OGDEN, UT 84401
BP-ARCHITECTS.NET
P 801.394.3033
F 801.394.9064

Stamp:
LICENSED PROFESSIONAL ENGINEER
No. 201880
KENNETH D. GARNER
STATE OF UTAH

NIBLEY 12 & MENDON UTAH STAKE CENTER

APPROX. 1585 W. 3200 S.
NIBLEY, UTAH

Project for:
THE CHURCH OF JESUS CHRIST OF LATTER-DAY SAINTS

Mark	Date (D-M-Y)	Description
	30-OCT-18	BID SET

Project Number: 1770
Plan Series: HET-SDS-09-07
Property Number: 5002240-17-010201

Sheet Title: FIRE ALARM PLAN

Sheet: FA101

HSDS-FA101.dwg - 10/22/2018 - 1:51 PM

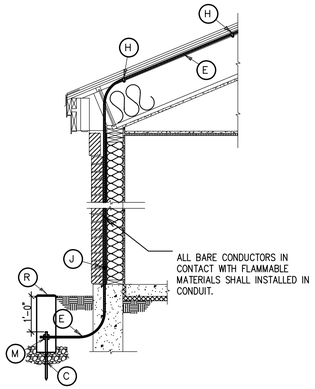

P CABLE INSTALLATION DETAIL
SCALE: 1/2" = 1'-0"

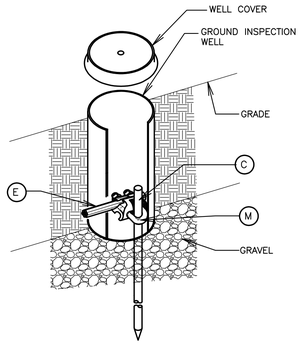

R GROUND INSPECTION WELL
NOT TO SCALE

NOTES

1. SEE SHEETS A121, A303 AND A308 FOR REQUIRED LIGHTNING PROTECTION SYSTEM. COORDINATE CONNECTION TO THE STEEPLE WITH THE GENERAL CONTRACTOR AND STEEPLE SUPPLIER. MAKE ALL REQUIRED CONNECTIONS FOR A COMPLETE LIGHTING PROTECTION SYSTEM.
2. SUPPORT LIGHTNING CABLES EVERY THREE FEET ALONG ENTIRE RUN USING SPECIFIED FASTENERS.
3. BOND METAL BODIES INTO SYSTEM AS REQUIRED.
4. FURNISH AND INSTALL SURGE PROTECTION DEVICE (SPD) FOR MAIN ELECTRICAL PANEL. REFER TO SPECIFICATIONS.
5. ELECTRICAL CONTRACTOR SHALL COORDINATE ALL CONNECTION REQUIREMENTS TO THE STEEPLE WITH THE GENERAL CONTRACTOR AND STEEPLE SUPPLIER. ELECTRICAL CONTRACTOR SHALL BE ON SITE WHEN THE STEEPLE IS INSTALLED AND MAKE ALL REQUIRED CONNECTIONS TO THE LIGHTNING PROTECTION SYSTEM.
6. REFER TO THE SPECIFICATIONS FOR ADDITIONAL INFORMATION AND REQUIREMENTS.
7. REFER TO THE SPECIFICATIONS FOR FITTING REQUIREMENTS.

LEGEND

- A AIR TERMINAL
- B CONCEALED AIR TERMINAL BASE ASSEMBLY
- C GROUND ROD
- D SMOOTH TWIST ALUMINUM CABLE
- E SMOOTH TWIST COPPER CABLE
- F PRESSURE TYPE TEE CABLE SPLICER
- G BIMETAL PARALLEL CLAMP
- H COPPER LOOP FASTENER
- J LARGE BRONZE CLAMP
- K PIPE CLAMP
- M PERPENDICULAR GROUND ROD AND CABLE CLAMP
- N AIR TERMINAL

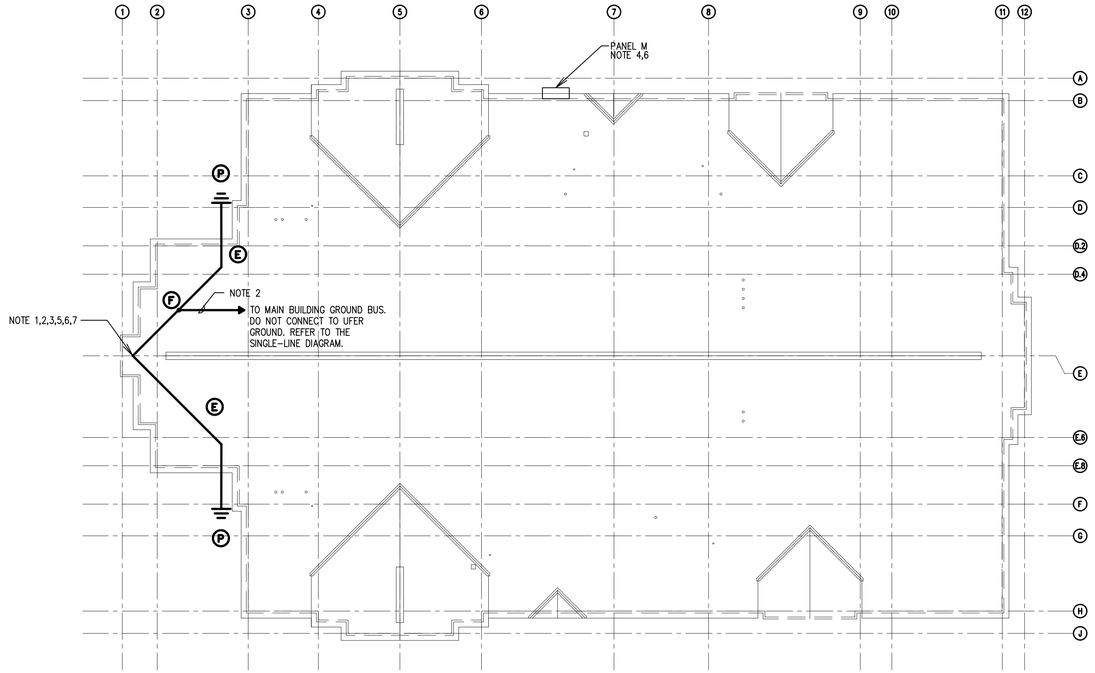

1 LIGHTNING PROTECTION PLAN
1/16" = 1'-0"
NORTH

Architect / Engineer:
BOTT PANTONE ARCHITECTS
620 24TH STREET
OGDEN, UT 84401
BP-ARCHITECTS.NET
P 801.394.3033
F 801.394.9064

Stamp:
LICENSED PROFESSIONAL ENGINEER
No. 271886
KENNETH D. GARNER
STATE OF UTAH

NIBLEY 12 & MENDON UTAH STAKE CENTER
APPROX. 1585 W. 3200 S.
NIBLEY, UTAH

Project for:
THE CHURCH OF JESUS CHRIST OF LATTER-DAY SAINTS

Mark	Date (D-M-Y)	Description
	30-OCT-18	BID SET

Project Number: 1770
Plan Series: HET-SDS-09-07
Property Number: 5002240-17-010201

Sheet Title: LIGHTNING PROTECTION

Sheet: LP101

HSDS-LP101.dwg - 10/22/2018 - 1:47 PM