RESIDENCE FOR JUSTIN AND AIMEE NAYLOR

3441 Hidden Meadow Circle

Morgan, UT 84050

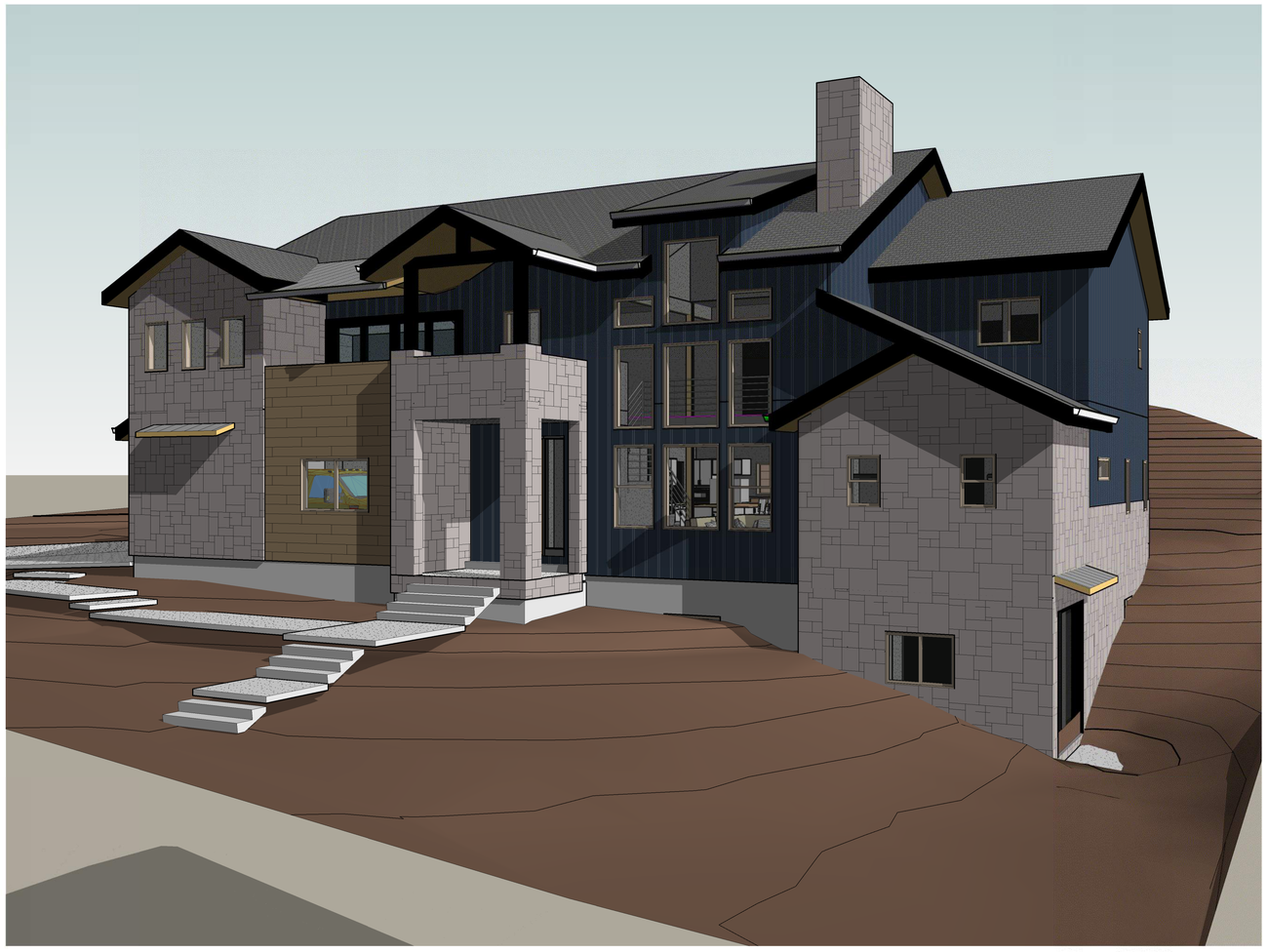

1 PERSPECTIVE

SHEET INDEX

GENERAL

G-001	COVER SHEET
G-002	GENERAL NOTES, SYMBOLS, ABBREVIATIONS
G-003	PRESENTATION PLANS

CIVIL

C-101	SITE PLAN

STRUCTURAL

S-001	GENERAL STRUCTURAL NOTES
S-100	FOOTING AND FOUNDATION PLAN
S-101	1ST FLOOR FRAMING PLAN
S-102	2ND FLOOR FRAMING PLAN
S-103	ROOF FRAMING PLAN
S-104	BASEMENT SHEAR WALL PLAN
S-105	FIRST FLOOR SHEAR WALL PLAN
S-106	SECOND FLOOR SHEAR WALL PLAN
S-400	SHEAR WALL ELEVATION
S-500	TYPICAL FOOTING AND FOUNDATION DETAILS
S-501	FOUNDATION AND SLAB DETAILS
S-502	TYPICAL WOOD DETAILS
S-503	TYPICAL WOOD FRAMING DETAILS
S-504	FLOOR DETAILS
S-505	FLOOR DETAILS
S-506	ROOF DETAILS
S-507	ROOF DETAILS
S-600	CONC. AND FOUNDATION SCHEDULES
S-601	WOOD SCHEDULES

SHEET INDEX

ARCHITECTURAL

A-100	BASEMENT FLOOR PLAN
A-101	FIRST FLOOR PLAN
A-102	SECOND FLOOR PLAN
A-103	ROOF PLAN
A-201	EXTERIOR ELEVATIONS
A-202	EXTERIOR ELEVATIONS
A-203	INTERIOR ELEVATIONS
A-301	BUILDING AND STAIR SECTIONS
A-303	WALL SECTIONS
A-501	ARCHITECTURAL DETAILS
A-601	SCHEDULES

ELECTRICAL

E-100	BASEMENT ELECTRICAL PLAN AND NOTES
E-101	1ST FLOOR ELECTRICAL PLAN
E-102	2ND FLOOR ELECTRICAL PLAN

SHEET NUMBER KEY

PHASE → DISCIPLINE → TYPE → SEQUENCE IN TYPE

X-A-201

Rev.	Description	Date	Appr.

Designed by: RME
Drawn by:
Reviewed by: RME
Submitted by:
Submitted: 20 MAY 2021
File:
Scale: 1 1/2" = 1'-0"
Project Number: Project Number
REV:

Residence for Justin & Aimee Naylor

3441 Hidden Meadow Circle
Morgan, UT 84050

COVER SHEET

SHEET NUMBER
G-001

PLOT DATE: 5/20/2021 9:33:01 PM

ABBREVIATIONS/ACRONYMS

A.B.	anchor bolt
A/C	air conditioning
ABV	above
ADA	americans with disabilities act
ADD'L	additional
AFF	above finished floor
ALT	alternate
ALUM	aluminum
ANOD	anodized
ANSI	american national standards institute
APPR	approved
APPROX	approximate
ARCH	architect(ural)
ASPH	asphalt
AUTO	automatic
BD	board
BLDG	building
BLK	block
BO	bottom of _____
BRG	bearing
BSMT	basement
BTWN	between
CF	cubic foot
CG	center of gravity
CI	cast iron
CJ	construction joint
CL	center line or column line
CLG	ceiling
CLR	clear(ance), category of logistical responsibility
CMU	concrete masonry unit
COL	column
CONC	concrete
CONST	construction
CONT	continuous, continue
CPT	carpet
CRS	course(s)
CSMT	casement
CY	cubic yard
DE	door elevation
DET	detail
DF	drinking fountain
DF-L	douglas fir
DIA	diameter
DIM	dimension
DIV	division
DL	dead load
DOD	department of defense
DPR	dispenser
DR	door
DWB	deformed weldable bar
DWG	drawing
E	east
EA	each
EJ	expansion joint
ELEC	electrical
ELEV, EL	elevation
EMT	electrical metallic tubing
EN	edge nail
EQ	equal
EQUIP	equipment
EST	estimate
EX	existing
EXP	expansion
EXT	extinguisher
f'c	concrete 28 day strength
f'm	masonry strength

FD	floor drain
FDN	foundation
FE	fire extinguisher
FEC	fire extinguisher cabinet
FGL	fiberglass
FHS	fire hose station
FIN	finish(ed)
FIN. FLR	finished floor elevation
FP	fireplace
FRT	fire-retardant treated
FS	footing step
FT	feet
FTG	footing
GA	gage, guage
GALV	galvanized
GB	grab bar
GD	grade(ing)
GF	government furnished
GI	government installed
GL	glass
GLB	glue laminated timber beam
GYP. BD.	gypsum wall board
HAS	headed anchor stud
HB	hose bib
HC	hollow core
HCAP	handicap
HD	holdown
HDR	header
HDWR	hardware
HM	hollow metal
HOR	horizontal
HR	hour
HRDWD	hardwood
HT	height
HTG	heating
HVAC	heating/ventilating/air cond.
HWH	hot water heater
ID	inside diameter
INCL	include(d), (ing)
INSUL	insulate(d), (ion)
INT	interior
JSN	joint schedule number
JT	joint
LAM	laminate(d)
LAV	lavatory
LF	linear feet
LH	left hand
LL	live load
LP	low pressure
LTL	lintel
LVL	laminated veneer lumber
LW	lightweight
MAS	masonry
MAT'L	material(s)
MAX	maximum
MB	machine bolt
MBR	member
MC	medicine cabinet
MECH	mechanic(al)
MED	medium
MFR	manufacture(r)
MIN	minimum
MISC	miscellaneous
MLB	microllam beam
MMB	membrane
MO	masonry opening

MTL	metal
MULL	mullion
N	north
NIC	not in contract
No.	number
NOM	nominal
NTS	not to scale
O.C.	on center
OD	outside diameter
OH	overhead
OPG	opening
OPP	opposite
OPT	optimum
PBD	particle board
PCB	polychlorinated biphenyls
PL	plate
PNL	panel
PSI	pounds per square inch
PSIG	pounds per square inch gauge
PT	pressure treated or post tension
PTD	painted
PTN	partition
QTY	quantity
R	riser(s), radius
RAD	radius
REA	Rand Eardley & Associates
REINF'D	reinforced
REQ'D	required
REV	revised
RM	room
RO	rough opening
S	south
S.S.	stainless steel
SCHED	schedule(ed)
SECT	section
SF	square feet
SHT	sheet
SIM	similar
SPEC	specifications
SQ	square
STD	standard
STG	storage
STRUC	structure(al)
SW	shear wall
T	tread(s)
T.O.	top of _____
TC	top of curb
TYP	typical
UL	underwriters laboratories
UNO	unless noted otherwise
VB	vapor barrier
VCT	vinyl composition tile
VERT	vertical
W	west
W/	with
W/O	without
WC	water closet
WD	wood
WF	wide flange
WP	water proof(ing)
WR	water repellant
WS	wall step
WSCT	wainscot
WWF	welded wire fabric

STANDARD SYMBOLS

ROOM DESIGNATION — ROOM CODE / Name / 150 / Room Number

DOOR DESIGNATION — 101A

WINDOW DESIGNATION — A

ELEVATION, (VIEW) — 1 / 2 A1.1 4 / 3

ELEVATION, (DATUM)

NORTH ARROW — NORTH

DETAIL — 1 / A101 SIM

DRAWING TITLE — 1 View Name 1/8" = 1'-0"

REVISION DESIGNATION — 1

GRID HEAD — 0

LINE TYPES

MATCH

PROPERTY

GRID

HIDDEN

REMOVAL

OVERHEAD

ARCHITECTURAL MATERIALS

STEEL STUD

GYPSUM BOARD CEILING / WALL

LAY-IN ACOUSTICAL CEILING

CONCRETE

CARPET / TILE (SECTION)

PLYWOOD (SECTION)

MASONRY WALL

TEMPORARY WALL

GENERAL NOTES

1. ALL WORK SHALL CONFORM TO THE INTERNATIONAL BUILDING CODE (2018 EDITION) AND ALL LOCAL CODES, INCLUDING ANY AND ALL COVENANTS, RULES AND REGULATIONS ADOPTED COTTONWOOD HILLS AND MORGAN COUNTY.
2. COORDINATION OF WORK: THE GENERAL CONTRACTOR SHALL COMPARE ARCHITECTURAL SPECIFICATIONS AND DRAWINGS WITH MECHANICAL AND ELECTRICAL SPECIFICATIONS AND DRAWINGS. IF THERE ARE ANY DISCREPANCIES BETWEEN THEM, HE SHALL REPORT THE SAME TO THE ARCHITECT IN WRITING AND OBTAIN FROM THE ARCHITECT WRITTEN INSTRUCTIONS FOR NECESSARY CHANGES.
3. THE CONTRACTOR SHALL VERIFY ALL DIMENSIONS ON THE DRAWINGS AND DIMENSIONS AND CONDITIONS AT THE SITE.
4. ALL MATERIALS SHALL BE NEW (U.N.O.) AND BOTH MATERIALS AND WORKMANSHIP SHALL BE OF BEST QUALITY.
5. THE CONTRACTOR SHALL BE RESPONSIBLE FOR SAFETY, SECURITY AND PROTECTION IN AND AROUND THE JOB SITE AND ADJACENT PROPERTIES (IF APPLICABLE).
6. ALL DETAILS AND NOTES ON DRAWINGS ARE INTENDED TO BE TYPICAL AND SHALL APPLY TO SIMILAR SITUATIONS ELSE WHERE UNLESS NOTED OR SHOWN OTHERWISE. CONSTRUCTION NOT SPECIFICALLY SHOWN, SHALL BE ACCOMPLISHED AS PER MINIMUM REQUIREMENTS OF THE INTERNATIONAL BUILDING CODE (2018 EDITION).
7. THE CONTRACTOR SHALL REVIEW, APPROVE AND VERIFY ALL SHOP DRAWINGS, PRODUCT DATA, SAMPLES AND SIMILAR SUBMITTALS TO ASSURE THEY COMPLY WITH THE REQUIREMENTS OF THE CONTRACT DOCUMENTS. SHOP DRAWINGS, PRODUCT DATA, SAMPLES, AND SIMILAR SUBMITTALS SUBMITTED TO THE ARCHITECT WHICH HAVE NOT BEEN REVIEWED, APPROVED, VERIFIED, STAMPED AND SIGNED BY THE GENERAL CONTRACTOR WILL BE RETURNED TO THE GENERAL CONTRACTOR WITHOUT ACTION BY THE ARCHITECT. THE ARCHITECT WILL REVIEW THE SHOP DRAWINGS FOR GENERAL CONFORMANCE WITH THE DESIGN CONCEPT. THIS REVIEW BY THE ARCHITECT SHALL NOT BE CONSTRUED AS APPROVAL. THE CONTRACTOR SHALL NOT BE RELIEVED OF RESPONSIBILITY FOR ERRORS AND OMISSIONS IN SHOP DRAWINGS, PRODUCT DATA, SAMPLES OR SIMILAR SUBMITTALS BY THE ARCHITECT'S REVIEW.

Rev.	Description	Date	Appr.

Designed by: RME
Drawn by:
Reviewed by: RME
Submitted by:
Submitted: 20 MAY 2021
File:
Scale: 12" = 1'-0"
Project Number: Project Number
REV:

Residence for Justin & Aimee Naylor

3441 Hidden Meadow Circle
Morgan, UT 84050

GENERAL NOTES, SYMBOLS, ABBREVIATIONS

SHEET NUMBER
G-002

PLOT DATE: 5/20/2021 9:33:02 PM

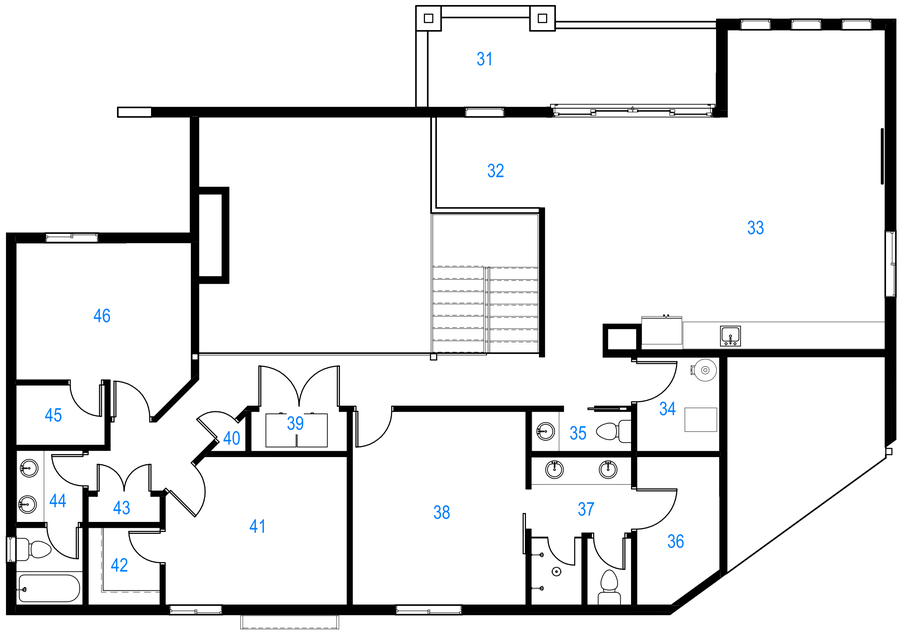

3 SECOND FLOOR
3/16" = 1'-0"

2ND FLOOR 1,690 SQFT

31 BALCONY
32 NICHE
33 FAMILY ROOM
34 UTILITY ROOM
35 POWDER ROOM
36 UPPER MASTER CLOSET
37 UPPER MASTER BATH
38 UPPER MASTER BEDROOM
39 LAUNDRY
40 CLOSET
41 BEDROOM 3
42 WALK IN CLOSET
43 LINEN
44 BATH ROOM
45 WALK IN CLOSET
46 BEDROOM 4

GARAGE 1,527 SQFT

13 TWO CAR GARAGE
14 STORAGE
15 RV GARAGE

1ST FLOOR 1,828 SQFT

16 MUD ROOM
17 CLOSET
18 1/2 BATH
19 LAUNDRY ROOM
20 PANTRY
21 KITCHEN
22 DINING ROOM
23 PATIO
24 MASTER BEDROOM
25 MASTER BATHROOM
26 MASTER CLOSET
27 LIVING ROOM
28 FOYER
29 CLOSET
30 PORCH

BAEMENT 1,716 SQ FT

1 CLOSET
2 UTILITY ROOM
3 EXERCISE ROOM
4 BONUS ROOM
5 STORAGE / BEDROOM 5
6 WALK IN CLOSET
7 CLOSET
8 STUDY
9 BATH ROOM
10 CLOSET
11 THEATER / DANCE STUDIO
12 COLD STORAGE

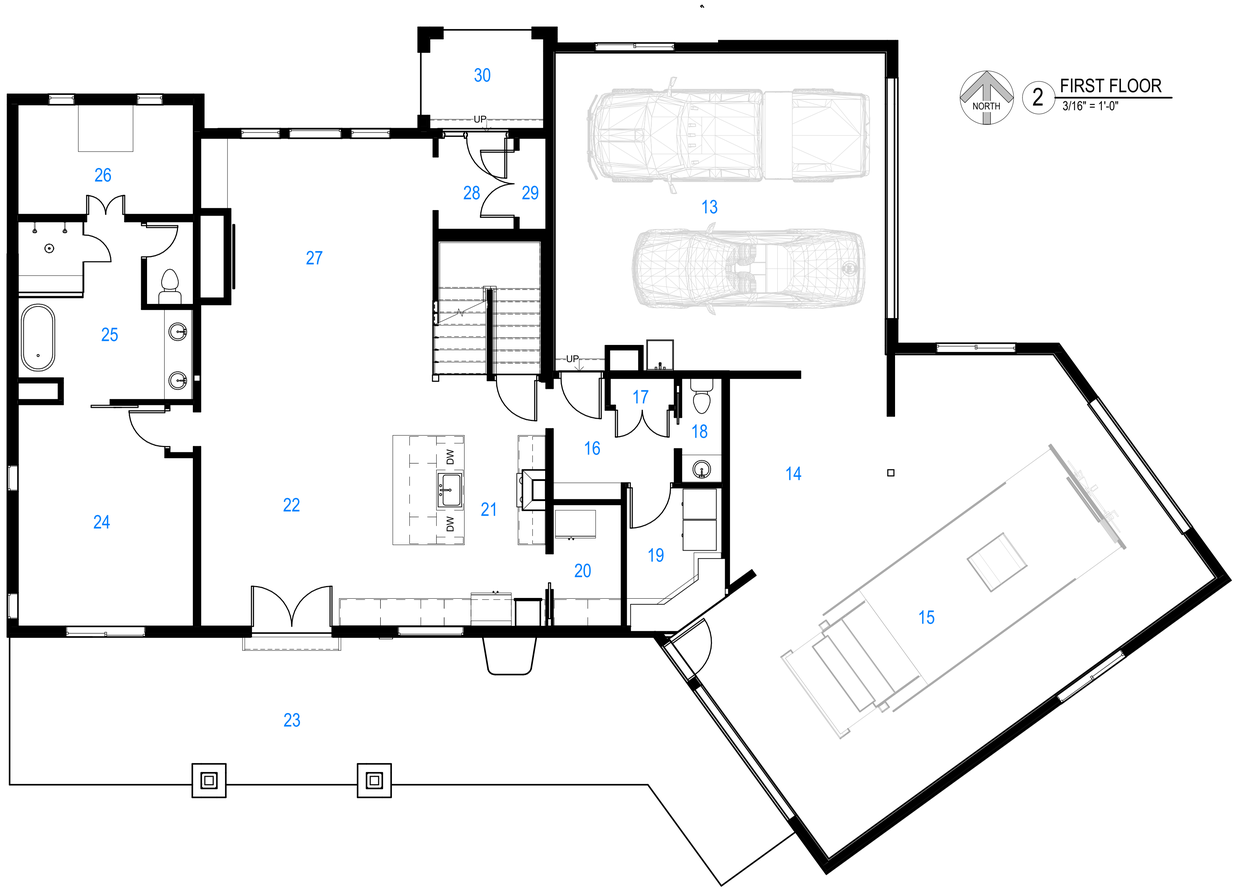

2 FIRST FLOOR
3/16" = 1'-0"

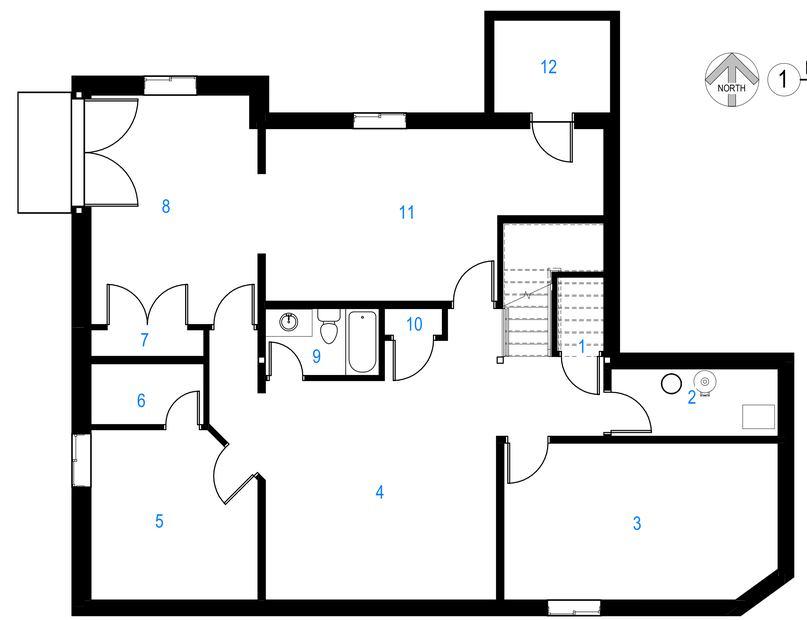

1 BASEMENT
3/16" = 1'-0"

64" 2' 0" 2' 4' 8' 16'
GRAPHIC SCALE 3/16" = 1'-0"

Rev.	Description	Date	Appr.

REV:

Submitted: 20 MAY 2021
File:
Scale: 3/16" = 1'-0"
Project Number: Project Number

Designed by: Designer
Drawn by: Author
Reviewed by: Checker
Submitted by: Approver

Residence for Justin & Aimee Naylor

3441 Hidden Meadow Circle
Morgan, UT 84050

PRESENTATION PLANS

SHEET NUMBER
G-003

PLOT DATE: 5/20/2021 9:33:05 PM

KEYED NOTES

01.16 FUTURE 12'x16' SHED. EXTERIOR TO BE BOARD AND BATTEN SIDING, FINISH TO MATCH THE MAIN RESIDENCE. ROOF SHINGLES TO MATCH THE MAIN RESIDENCE
01.17 OPTIONAL FUTURE FENCE WITH 10' GATE. FENCE TO COMPLIMENT RESIDENCE AND NOT TO EXCEED 6'-0" IN HEIGHT
22.10 NON-FREEZE TYPE BACKFLOW PREVENTER HOSE BIB, ON HIGH PRESSURE WATER LINE
22.15 NEW WATER METER
22.16 PERIMETER FOUNDATION DRAIN
26.14 NEW ELECTRICAL SERVICE AND METER
32.03 FLOWERING PEAR TREE
32.04 SPRING SNOW CRAB APPLE TREE
32.05 AUTUMN BLAZE MAPLE TREE
32.06 GRAHAM BLANDY BOXWOOD TREE
32.07 SLENDER HINOKI CYPRESS TREE
32.08 FRANS FONTAINE HORNBEAM TREE
32.09 SWEDISH COLUMNAR ASPEN TREE
32.10 BOULDER WALL, NOT TO EXCEED 4'-0"
33.05 NEW GAS METER

SITE PLAN GENERAL NOTES

1. ASSURE EXISTING GRADE ALLOWS SURFACE WATER TO DRAIN AWAY FROM HOUSE AT ALL POINTS. ASSURE DRAINAGE WATER IS DIRECTED TOWARD THE STREET OR TO AN APPROVED DRAINAGE COURSE, DO NOT DRAIN ON NEIGHBORING PROPERTIES. THE GRADE SHALL FALL A MINIMUM OF 6 INCHES WITHIN THE FIRST 10 FEET.

THE COTTONWOODS
PHASE 2
COTTONWOOD HILLS A
LOT 90
SQUARE FOOTAGE = 17,973 SQ FT
ACRES = 0.413
L = LAND DRAIN LATERAL AVAILABLE

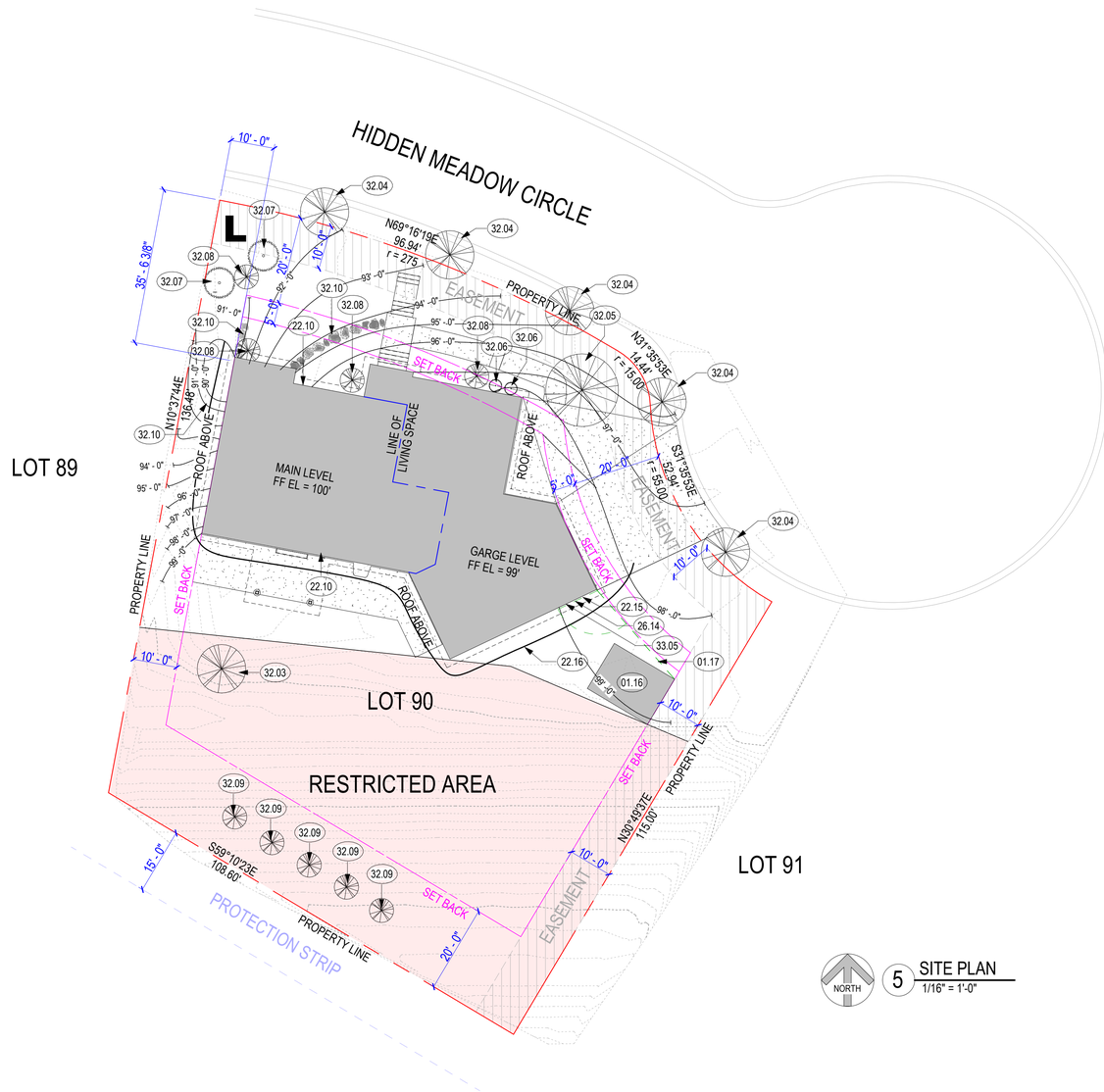

5 SITE PLAN
1/16" = 1'-0"

STRAW WATTLE DETAIL

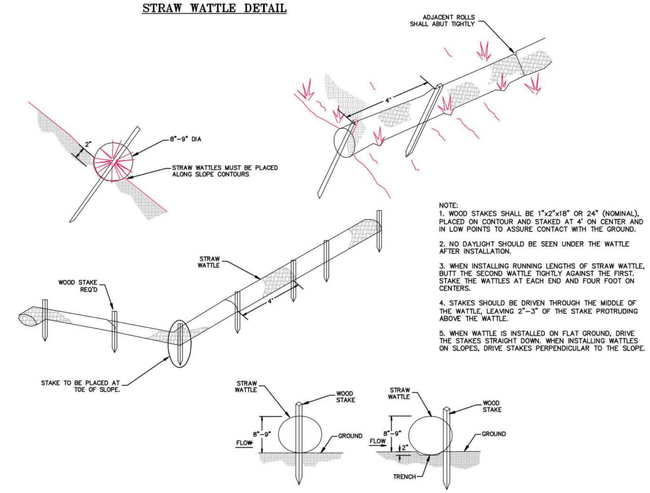

NOTE:
1. WOOD STAKES SHALL BE 1"x2"x18" OR 2"4" (NOMINAL), PLACED ON CONTOUR AND STAKED AT 4' ON CENTER AND IN LOW POINTS TO ASSURE CONTACT WITH THE GROUND.
2. NO DAYLIGHT SHOULD BE SEEN UNDER THE WATTLE AFTER INSTALLATION.
3. WHEN INSTALLING RUNNING LENGTHS OF STRAW WATTLE, BUTT THE SECOND WATTLE TIGHTLY AGAINST THE FIRST. STAKE THE WATTLES AT EACH END AND FOUR FOOT ON CENTERS.
4. STAKES SHOULD BE DRIVEN THROUGH THE MIDDLE OF THE WATTLE, LEAVING 2"–3" OF THE STAKE PROTRUDING ABOVE THE WATTLE.
5. WHEN WATTLE IS INSTALLED ON FLAT GROUND, DRIVE THE STAKES STRAIGHT DOWN. WHEN INSTALLING WATTLES ON SLOPES, DRIVE STAKES PERPENDICULAR TO THE SLOPE.

1 STRAW WATTLE DETAIL
NTS

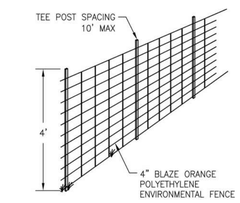

ENVIRONMENTAL FENCE
NO SCALE

2 ENVIRONMENTAL FENCE
NTS

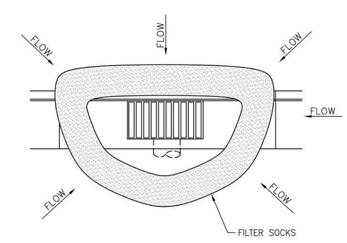

PLAN VIEW

NOTES:
1. INSPECT INLET PROTECTION AFTER EVERY LARGE STORM EVENT AND AT A MINIMUM OF ONCE A WEEK.
2. REMOVE SEDIMENT ACCUMULATED WHEN IT REACHES 1/2 OF FILTER SOCK HEIGHT.
3. FILTER FABRIC MAY BE USED WITHIN INLET BY SECURING THE FABRIC WITH THE INLET GRATE COVER. THIS METHOD OF INLET PROTECTION IS APPROPRIATE FOR HIGH TRAFFIC AREAS AND MAY NEED THE APPROVAL OF A CITY INSPECTOR.

STORM DRAIN INLET PROTECTION
NO SCALE

4 STORM DRAIN INLET PROTECTION
NTS

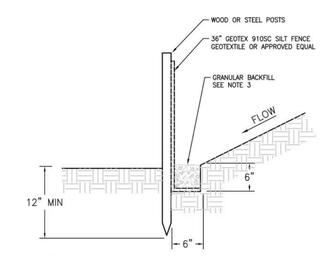

NOTES:
1. LAY TOE–IN FABRIC FLAP IN BOTTOM OF TRENCH, BACKFILL TRENCH WITH FREE DRAINING GRANULAR MATERIAL, COMPACT TRENCH TO SATISFACTION OF CITY INSPECTOR.
2. SILT FENCE GEOTEXTILE SHALL MEET AASHTO M288–92 REQUIREMENTS.
3. REMOVE & DISPOSE OF SEDIMENT WHEN ACCUMULATION IS 30%–50% OF EXPOSED FENCE HEIGHT.
4. 6' MAXIMUM SPACING BETWEEN STAKES.
5. INSPECT DAILY DURING PROLONGED RAINFALL, AFTER EACH MAJOR RAIN EVENT (0.5" OR MORE OF RAIN) AND AT A MINIMUM OF EVERY TWO WEEKS.

SILT FENCE DETAIL
NOT TO SCALE

3 SILT FENCE DETAIL
NTS

0' 4' 8' 16' 32' 64'
GRAPHIC SCALE 1/16" = 1'-0"

Rev.	Description	Date	Appr.

Designed by: Designer
Drawn by: Author
Reviewed by: Checker
Submitted by: Approver
Submitted: 20 MAY 2021
File:
Scale: As indicated
Project Number: Project Number
REV:

Residence for Justin & Aimee Naylor
3441 Hidden Meadow Circle
Morgan, UT 84050
SITE PLAN

SHEET NUMBER
C-101

PLOT DATE: 5/20/2021 9:32:46 PM

GENERAL STRUCTURAL NOTES

1.0 GENERAL NOTES, INSTRUCTIONS, AND SUBMITTALS

1.1 GENERAL INSTRUCTIONS

a. Construction, material testing, workmanship, inspections etc. shall conform to the to the requirements of the governing edition of the International Building Code (IBC), American Society for Civil Engineers (ASCE7)(ASCE7), OSHA STANDARD and other standards as required by the Authority having jurisdiction (AHJ) or as required by owner.

b. Contractor shall be become familiar with the contract documents and shall ensure subcontractors understand the portion of the work pertaining to their area OF WORK. Any changes to the construction documents shall be submitted in writing to the EOR/Arch prior to implementation. Changes not approved by the EOR will be redone, FIXED or corrected at the contractor's expense.

c. Contractor shall be responsible to verify site dimensions and conditions. Discrepancies between site conditions and the Contract Documents shall be brought to the attention of the Arch/EOR prior to proceeding with work in the affected area. ***Existing conditions have been verified to the best of the EOR's ability, however if actual conditions differ significantly notify EOR before proceeding with work.***

d. The drawing and specifications show the finished structure . The contractors shall be responsible for designing and providing mean and methods of construction including, but not limited to, shoring forming, temporary bracing etc unless noted otherwise (UNO) Adequate shoring and bracing shall be provided until the final structural support systems are in place.

e. Contractor shall keep record of modifications made to the original contract documents and report them to the Arch/EOR to be added to the as-built drawings

f. Contractor shall be responsible to verify MEP component size and weight prior to fabrication of the structural supporting systems. Size and locations that do not match drawings may require additional framing members and supports.

g. In the event that certain features of the construction are not fully shown on the drawing or call for in the General Notes or specifications, their construction shall be of the same character and quality as for similar conditions that are specified elsewhere in the construction documents.

h In the event that conflicting notes or details are encountered the more stringent or restrictive items shall apply unless a written clarification of details is provided by the engineer of record for the project. Typical details may be used as long as reasonably similar to the encountered situation.

I. The Architect/Engineer shall be contacted in the event that any portion of the new construction (as shown on these construction documents) can not be accomplished due to conflicts with other portions of the construction documents. The contractor is responsible to verify dimensions and on-sire conditions prior to start of work of fabrication of building components.

j. The plans and details have been prepared to visually represent the actual condition UNO. However, **DO NOT** scale the drawings for dimensional information. Refer to Architectural drawings for dimensions UNO. Dimensions, where shown, on structural drawings are to stud line, rough concrete, or concrete block surface unless shown or called out otherwise.

k. Construction, material testing, workmanship, inspections etc. shall conform with the requirements of the governing code in sections 1.1. Contractor shall coordinate inspections, testing, and observations as the work proceeds.

l. The contractor and owner shall be responsible for maintaining the design loads listed herein at all times. This includes during and after construction. The contractor shall use "good judgement" in placing building materials around the site as to not overload structural members.

1.2 STRUCTURAL OBSERVATION

a. Where required STRUCTURAL observations shall be performed by a licensed structural engineer. observation reports shall be submitted to the Architect and persons having Jurisdiction over the project. Observations performed by Spectrum Engineers representatives shall not take the place of special Inspections, or building inspections as required by code. Structural observations are intended to provide an opportunity to clarify misunderstandings and verify overall understanding of the design intent. It is not approval or certification of construction. Refer to the Structural Observations Schedule for items and sequencing of visits.

1.3 SUBMITTALS

a. Submittals shall be made for items designed by others and shop drawings. Spectrum Engineers shall review for overall compliance and understanding of the design intent. The contractor retains responsibility for verifying member sizes, quantities, dimensions, elevations etc. on all submittals related to contract documents. Approved shop drawing and materials must be on site prior to commencement of work.

THE FOLLOWING ITEMS SHALL BE SUBMITTED FOR REVIEW:

1. ***Concrete material and mix designs***
2. ***Reinforcing Steel***
3. ***Wood truss's and calculations (Pre-fabricated)***
4. ***Wood joists and Beam (manufactured)***

2.0 BASIS OF DESIGN

2.1 GRAVITY LOADING

1. The governing code for vertical load resisting elements shall be the **2018** IBC & ASEC7-16 "Minimum Design Loads and Associated Criteria for Buildings and other Structures"
2. Building Risk Category — II
3. Dead Loads
   - Roof — 15 psf
   - Floor — 12 psf
4. Floor Live Load:
   - Residential — 40 psf
   - Garage attic storage — 60 psf
5. Roof Live Load:
   - Roof Live Load: — 20 psf
6. Snow Load:
   - Roof Snow Load — 38.5psf + Drift IBC
     - a. Ground Snow Load, Pg: — 55psf
     - b. Snow Exposure Factor, Ce: — 1.0
     - c. Snow Importance Factor, Is: — 1.0
     - d. Thermal Factor, Ct: — 1.0

2.2 LATERAL LOADING

1. The governing code for lateral load resisting elements shall be the 2018 IBC & ASEC7-16 "Minimum Design Loads and Associated Criteria for Buildings and other Structures"
2. Seismic Design (EQ)
   - Seismic Design Category — D
   - Spectral Response Accelerations (%g)
     - a. S_s=0.749 S_1=0.28 — Spectral Response
     - b. S_{DS}=1.228 S_{D1}0.567 — Design Spectral Response
   - Soil site class — D
   - Lateral Force Resisting System (LFRS):
     - a. **Wood Framed Shear Wall**
     - b. R=6.5 — Response Modification Factor
     - c. C_d=4 — Deflection Amplification Factor
     - d. Ω_0=3 — Overstrength Factor
     - e. I_e=1.0 — Importance Factor
     - f. ρ=1.0 — Redundancy Factor
     - g. Cs=0.092 — Seismic Response Coefficient,
     - h. Vs=0.092*w_{eff} kips — Design Base Shear
     - i. w_{eff}= varies — Effective Seismic Weight
     - j. Δ:0.02h — Design Story Drift
     - k. h=varies — Story height
     - l. Design Procedure= ELF — Equivalent Lateral Force
3. Wind Design
   - Wind Parameters
     - a. V_{ULT}=103 mph — Ultimate Design Wind Speed
     - b. V_{ASD}= 79.8 mph — Allowable Design Wind Speed
     - c. Exposure=C — Wind Exposure Category
     - d. GC_{pi}=0.18 — Internal Pressure Coefficient
     - e. K_{zt}=1.0 — Topographic Factor
   - Components and Cladding Design Pressure (Ultimate):
     All wind values given in psf (psf= pound per square foot)

	Location	Tributary Area (ft²) <10	50	100	500
Walls:	Within (a) of building corner (zone 5)	33.6	28.3	26.1	20.8
	All other areas (zone 4)	27.2	24.6	23.4	20.8
Roof:	Within (a) of building corner (zone 3)	66.4	42.1	42.1	29.3
	Within (a) of building edge (zone 2)	56.9	40.5	33.4	29.3
	All other areas (zone 1)	35.7	30.7	26.9	20.8

a =5.0 ft

3.0 SOIL DESIGN PARAMETERS

3.1. NO SOILS REPORT

No soils report available. Contractor shall retain GEOTECHNICAL Engineer to observe the excavations and verify the assumed parameters. The authority have jurisdiction over the project may waive the requirement. Corrective measure shall be taken to obtain the assume soil design parameters.

Min frost cover 36 inches below existing grade.

4.0 EARTHWORK

4.1 SOIL PERPETRATION

a. Prior to construction, the contractor shall verify the soil conditions are adequate for a 1,500 psf allowable soil bearing pressure. Poor soil beneath footings and slabs shall be removed and replaced with structural fill as required. Where GEOTECHNICAL report is available follow directions in report.

b. Remove all existing structure remnants, foundation, slabs, asphalt fencing, concrete, trees roots etc. as required. The pad/footing area shall be stripped of vegetation, topsoil and other deleterious material. All existing fill soils and remaining loose natural soils shall be excavated and removed to expose suitable natural soils.

c. Prepare the site work area per the GEOTECHNICAL report. Or, where no report is available, proof roll the entire pad with standard compaction equipment to check for the presence of unsuitable fills, soft spongy areas, and other undesirable materials. Excavate and remove areas with undesirable material and replace with compacted structural fill.

d. Compacted structural fill shall be well graded non-expansive granular material with a maximum size less than 4 inches and with not more than 35 percent passing a No. 200 sieve. It shall be compacted to at least 95 percent of the maximum dry density as determined by ATM D 1557 for fill beneath footings and 90 percent for fill beneath floor slabs. All fill shall be tested. Compacted structural fill shall be place in 8 inch uncompilicated lifts maximum.

e. Floor slab thickness shall be as noted on the plans. It shall be underlain the a minimum of 6 inches of free draining gravel, or as directed in the approved GEOTECHNICAL Report. The granular layer shall have a maximum size of less than 2 inch with not more than 5 percent passing a #200 sieve and shall be compacted to at least 90 percent of the maximum dry density as determine by ASTM D 1557.

5.0 CONCRETE

5.1 CONCRETE STRENGTH AND DESIGN PARAMETERS

a. Concrete construction shall be performed in accordance with ACI 318 and other approved standards.

b. The minimum 28 day compressive strength for each type of item on this project is shown in the table below. Table also includes Water/Cement Ratio (W/C), Air Content, Max Aggregate size and Exposure class (see ACI 318 19.3.2.1). Exposure class refer to the following: F- Freeze & Thaw, S- Sulfate, C- Chloride

COMPONENT	28 DAY STRENGTH (psi)	MAX W/C (%)	AIR CONT. (%)	MAX AGG SZ (in)	EXPOSURE CLASS F	S	C	PORTLAND CEMENT TYPE
Footing (Freezing)	4500	0.5	5	1	F2	S0	C1	II,V
Footing	3000	0.5	NA	1	F0	S0	C1	II,V
Foundation Wall (Freezing)	4500	0.5	5	1	F2	S0	C1	II,V
Foundation Wall	3000	0.5	NA	1	F0	S0	C1	II,V
Slab-on-Grade	3000	0.5	NA	1	F0	S0	C0	II,V
Over Steel Deck	4000	0.45	6	3/4	F1	S0	C0	II
Walls	4000	0.45	3	3/4	F1	S0	C1	II

c. Portland Cement (ASTM)
   - Type I- General Purpose
   - Type II- Moderate Sulfate Resistance
   - Type III- High early strength
   - Type IV- Slow Reacting
   - Type V- High Sulfate Resistance

d. Fly Ash - (ASTM Class C or F) max content to weight ratio is 25 percent

e. Concrete Density
   1. Normal weight concrete 150 pounds per cubic foot
   2. Lightweight concrete shall be 110 pounds per cubic foot

f. Aggregate
   1. Normal weight in accordance with ASTM C33.
   2. lightweight in accordance with ASTM C330.

g. Admixtures
   1. Super plasticizers and water reducers are permitted.
   2. Calcium chloride admixtures are not permitted
   3. Water shall be clean potable and free of refuse.

h. Slump
   1. Maximum slump prior to addition of water reducers or plasticizer shall be 4". Submittal shall include final slump to used on submittal package.

j. Special Inspection and Testing
   1. All concrete placed shall be subject to special inspections and testing per IBC chapter 17, see special inspection section for additional information.

5.2 CONSTRUCTION

a. Formwork and shoring shall be at the discretion of the contractor. Contractor shall remove all forms and shoring after adequate strength has been obtained.

b. Do not allow penetration through any structural element unless specifically instructed to do so.

c. Mechanical vibrate concrete during placement.

d. Before placing concrete, See Electrical, Meccanical, piping and architectural drawings for additional penetrations, embeds, sleeves, floor drains, conduit, block-outs, etc. That are not shown on the structural drawings.

e. Embedded items: Bolts, Rebar, Welded wire fabric, and inserts shall be positively held in place before concrete placement. The contractor hall verif the loaction of equipment anchor bolts with the approvied vendor submitted drawings. Slab reinforcement, including wire fabrice, shalle be place on chairs or spacing blocks to maitiain adequate rebar cover.

f. Expansion joint material shall confrom to ASTM D944 for bituminous impregnated fiberboard.

5.3 FOOTINGS

a. Center footing below wall or column, unless specifically instructed otherwise.
b. Footings shall be place below the effects of frost, UNO (exterior only)
c. Footings shall bear on properly prepared sub-surface, See Basis of Design.
d. Stagger footing cold joints from wall cold joints 48" min.

5.4 SLAB-ON-GRADE

a. Interior slab shall be 4" thick min. with 4" of free draining gravel below UNO.
b. Slab reinforcement shall be #4 bars at 24" O.C. each directions UNO.

5.5 WALL

a. Minimum wall reinforcing shall be as follow, (unless noted otherwise):

Wall Thickness (in)	Horizontal Reinforcing	Vertical Reinforcing
8	#5 @ 12" o.c.	#4 @ 16" o.c.

o.c.=on center

6.0 REINFORCING STEEL

6.1 MATERIALS

a. Steel Reinforcing shall conform to ASTM 615 or ASTM A706 (weldable) and shall be grade 60 (f_y= 60,000 psi) minimum unless noted otherwise.

6.2 CONSTRUCTION

a. Minimum cover requirements of steel deformed bar reinforcing shall comply with ACI 318 Table 20.6.1.3.2 – Specified concrete cover for cast-in-place non-prestressed concrete.

Concrete Exposure	Member	Reinforcement Size	Specified Cover (in)
Cast against and permanently in contact with Ground	ALL	All	3
Exposed to Weather or in Contact with Ground	All	#6-#18 bars #5 and smaller	2 1-1/2
Not Exposed to Weather or in Contact with Ground	Slab, Joists & Walls	#14-#18 bars #11 and smaller	1-1/2 3/4
	Beams, Ties, Column, Pedestals	Primary Reinforcement stirrups, ties, spirals and hoops	1-1/2

b. Lap splices of reinforcement shall conform to the "TYPICAL REBAR DEVELOPMENT/LAP LENGTH SCHEDULE" unless note otherwise 125% of the spliced bars yield strength.

d. All reinforcing shall be bent cold. Do not heat reinforcing steel. Rebar may be bent one time only. Do not re-bend bars.

e. All reinforcing shall be securely held in place while placing concrete.

f. All reinforcing shall be marked such that identification can be made during final inspection.

g. Use of epoxy coated reinforcing requires additional lap length. Epoxy coated reinforcing should only be used when specifically noted, unless EOR in notified prior.

7.0 ANCHOR BOLTS

7.1 POST INSTALLED CONCRETE ANCHOR BOLTS

a. Anchor design for structural and nonstructural components shall be in accordance with Chapter 17 of ACI 318-19.

b. Concrete anchors shall be approved for use in cracked concrete and have an approved ICC report UNO.

c. Post installed anchors shall be installed by qualified personnel and in accordance with the manufacturers printed installation instructions (MPII). Existing reinforcing bars shall not be damaged. Drilled holes striking rebar shall immediately be abandoned and patched. The hole shall be relocated or where not feasible contact EOR. Where anchors are installed in pre or post tensioned slabs the reinforcing strands shall be located via X-ray or similar scan. Do not install anchor within 1-1/2" inches pre-stressing strand.

d. Subcontractor shall supply all equipment required for anchor bolt installation according to MPII. This includes but is not limited to drills, setting tools, clean out brushes, blow-out bulbs, oil free compressed air, vacuums, wrenches etc. as required for installation per manufacturer.

e. Anchors installed in exterior applications or exposed to the moisture shall be hot-dip galvanized per ASTM A153 or stainless steel of type 304/316 per ASTM A193,A320 and F593.

f. Nuts, washers, and other hardware used with an all-threaded bar adhesive anchor system or with a mechanical (expansion or screw) anchor shall have a material or an alloy designation that is compatible with the anchor rod/alloy. Galvanized assemblies shall be hot-dip galvanized in accordance with ASTM A153 Class C. Electroplate galvanizing is not acceptable. Dissimilar metal assemblies shall be separated by nylon, EPDM, or other approved non-metallic washers.

g. Concrete at time of adhesive anchor installation shall have a minimum age of 21 days. For installation of adhesive anchors in concrete having an age less than 21 days, tests shall be conducted to verify the performance of the product in accordance with ACI 355.4

h. Installation of adhesive anchors in orientations from horizontal to vertical to support sustained tension loads shall be performed by personnel certified by the ACI Adhesive Anchor Installer Certification program or equivalent. These anchors are designated with a (CERT) after the anchor callout.

Mechanical anchors shall be tested and assessed in accordance with the most recent edition of ACI 355.2 Qualification of Post Installed Mechanical Anchors in Concrete and Commentary. Acceptable mechanical anchors are as follows:

Screw anchor:
1. Kwik HUS-EZ (ESR 3027) by Hilti Corporation
2. Screw-Bolt + (ESR 3889) by DeWalt-Powers
3. Titen HD (ESR-1056) by Simpson Strong Tie Inc.
4. Alternate screw anchors may be used if an ESR-ICC approval report for use in Cracked concrete is submitted to the EOR prior to use.

Wedge anchor:
1. Kwik Bolt TZ (ESR-1917) by Hilti Corporation
2. Powers-Stud + (ESR 2818) by DeWalt-Powers
3. Strong Bolt 2 (ESR-3037) by Simpson Strong Tie Inc.
4. Alternate wedge anchors may be used if an ESR-ICC approval report for use in Cracked concrete is submitted to the EOR prior to use.

Adhesive anchor systems shall be tested and assessed in accordance with the most recent edition of ACI 355.4 Qualification of Post-Installed Adhesive Anchors in Concrete (355.4) and Commentary. Acceptable adhesive anchors are as follows:

Adhesive anchors:
1. HIT HY 200 (ESR-3187) by Hilti Corporation
2. Pure 110+ (ESR 3298) by DeWalt-Powers
3. SET-XP (ESR-2508) by Simpson Strong Tie Inc.
4. Alternate epoxies may be used if an ESR-ICC approval report for use in Cracked concrete is submitted to the EOR prior to use.

7.2 FIELD QUALITY CONTROL

a. The International Building Code (IBC 2018) requires special inspection of all post-installed anchors. ACI 318-19 sections 26.13.1.5 and 26.13.1.6 require that all inspections of mechanical and adhesive anchors, respectively, are performed by a certified field inspector specifically approved for that purpose by the Licensed Design Professional and the building official. Certification is established through an independent assessment such as the ACI Post-Installed Concrete Anchor Installation Inspector Program or similar program with equivalent requirements. Adhesive anchors installed in horizontal or upwardly inclined orientations to resist sustained tension loads shall be continuously inspected during installation by a certified inspector.

7.3 CAST IN-PLACE ANCHOR BOLTS

a. Anchor bolts shall have ASTM A563 heavy hex nut and hardened washers
   1. Typical anchor bolts shall be ASTM F1554 Grade 36 Headed Bolts.
   2. High strength application are noted on plan and shall use ASTM F1554 Grade 105 Headed Bolts

b. Contractor shall furnish templates, mock ups, etc as required prior to placing anchors to ensure proper installation and clearances.

c. Minimum embedment of all anchors shall be 6". Refer to individual details for connections that require greater embedment lengths.

8.0 WOOD

8.1 CODES AND STANDARDS

a. The ANSI/ALF&PA "National Design Specification", (NDS).
b. The grading requirements of the WWPA.
c. Preservative Treatment requirements of the AWPA.

8.2 MATERIALS (All materials shall be clearly marked)

a. Structural lumber species and grade shall be as follows:
   1. Joists, beams or headers:"DF/L #2' or better.
   2. Posts and columns:"DF/L #1' or better.
   3. Studs:"DF/L #2' or better.
   4. Sill plates:"DF/L #2' or better, treated.

b. Manufactured joists: Truss-Joist or approved equal.

c. Structural Glued-Laminated Timber; 24F-V4 for simple spans and 24F-V8 for continuous or cantilevered beams.

d. Engineered Lumber:
   1. Structural Laminated-Veneer-Lumber (LVL): conform to the following minimum design values:
      Fb =2,600 psi. (Joist/Beam orientation)
      Fv =285 psi.
      E =1,900,000 psi.
   2. Structural Laminated-Strand-Lumber (LSL): conform to the following minimum design values:
      Fb =2,325 psi. (Joist/Beam orientation)
      Fv =310 psi.
      E =1,550,000 psi.
   3. Structural Parallel-Strand-Lumber (PSL): conform to the following minimum design values:
      Fb =2,900 psi. (Joist/Beam orientation)
      Fv = 290 psi.
      E =2,000,000 psi.

e. Wood structural panels shall be Exposure 1 Grade or better APA rated sheathing with exterior glue and conform to Standard PS 1-83, or PS 2-92.

f. Wood connectors shall be Simpson Strong-Tie.

8.3 CONSTRUCTION

a. See plans for roof and floor joists sizes. Joists shall be laterally supported at bearing points by solid blocking or with metal hangers.

b. Erect manufactured joists in accordance with the fabricator's commendations. Joists shall be able support the loads published in their design catalogs.

c. Provide bridging at 8'-0" o.c. maximum spacing for dimensional lumber and LVL joists. Provide bridging in all other manufactured joists as per the manufacturer's recommendations.

d. Fill all nail holes, round and triangular, in wood connectors (framing anchors, joist hangers, purlin anchors, etc.) with nails as specified by the manufacturer, UNO.

e. Bolts and all-threads in wood connectors shall be machine rated bolts, A307 or better.

f. Install washers under all bolt nuts. Make bolt holes only 1/32 to 1/16 inch larger than bolts. Tighten nuts snugly, but DO NOT crush the wood. DO NOT countersink bolts, UNO.

g. Specified nails are common and shall correspond to the following diameters and lengths: (16d -0.162"Ø & 3-1/2" long; 10d-0.148"Ø & 3" long; 8d-0.131"Ø & 2-1/2" long)

h. Minimum nailing of members: Conform to IBC, Table 2304.9.1, UNO.

i. Nail built-up beams of 2x_ members 12" deep or less together with 16d nails at 12" o.c., staggered. Add (2) 16d common nails at supports. Bolt 2x_ members deeper than 12" together with 1/2" bolts at 16" o.c. staggered. Add (2) bolts at supports.

J. Nail built up column of 2x_ members as follows"

j. (2) 2x4 laminations: 16d nails @ 6" O.C. staggered
   - b. (2) 2x6 laminations: (2) rows 16d nails @ 6" O.C. staggered
   - c. (3) 2x4 laminations: sheathing connected on (1) side- 16d nails @ 6" O.C. staggered each lamination
   - d. (3) 2x4 laminations: No sheathing - 30d Common @ 6" O.C. staggered
   - e. (3) 2x6 laminations: sheathing connected on (1) side- (2) rows of 16d nails @ 6" O.C. staggered each lamination
   - f. (3) 2x6 laminations: No sheathing - (2) rows of 30d Common @ 6" O.C. staggered

k. All drilled holes and cut ends of preservative-treated and fire-retardant-treated wood shall be field treated with a preservative per AWPA Standards.

l. Fasteners (including nuts and washers) in preservative-treated and fire-retardant-treated wood shall conform to IBC Section 2304.10.5, UNO.

9.0 WOOD ROOF TRUSSES (PRE-FABRICATED)

9.1. PRODUCT:

a. Design and fabricate roof trusses in accordance with the requirements of the Truss Plate Institute (TPI). Use galvanized metal gusset plates designed and manufactured per approval of "The Research Committee for the ICBO".

9.2 DESIGN:

a. The truss manufacturer is responsible for the design and fabrication of the truss system and it's bracing requirements.

b. Design trusses to support the following loads.

Snow load	(Top chord)	38.5 PSF
Dead load	(Top chord)	10 PSF
Live load	(Bottom chord)	10 PSF
Dead load	(Bottom chord)	10 PSF

c. Truss design shall conform to the requirements of the current edition of IBC Section 1608 and ASCE 7 Section.
   These requirements shall include, but are not limited to, the following:
   1. Partial loading.
   2. Unbalanced snow loads. (See Schedule)
   3. Drifts on lower roofs and roof projections. (See Plan)
   4. Sliding snow.
   5. Ice dams and Icicles along eaves (double eave loads).

d Consider the effects of eccentric loading in the design of heel joints.

e. No stress increase for plate connectors is allowed.

f. Submit complete calculations and shop drawings indicating member forces, stresses, lumber grades, dimensions, metal truss plate sizes and locations and bracing requirements for review prior to fabrication.

9.3. FABRICATION:

a. Fabricate in jigs with accurately cut lumber. Provide full bearing at joints.
b. Use kiln dried lumber.
c. Position members as shown on the drawings, if provided. Otherwise follow the approved shop drawings.
d. Press plates into members to obtain full penetration. DO NOT crush the wood.
e. Balance plates on the joint as the stresses require. Provide a minimum bite of 2.5" length on each member. The minimum size of any connector shall be 12.5 square inches.
f. Dimension connectors on the shop drawings for each joint.

9.4. ERECTION:

a. Brace roof trusses in accordance with the "Lateral Bracing Requirements" of the TPI.
b. Nail multiple trusses together with 16d at 12" o.c. on all chord and web members, minimum. See fabricators shop drawings for additional nailing requirements.

PROFESSIONAL ENGINEER LICENSED No. 924712-2202 Timothy Paul Ringwood STATE OF UTAH 20 MAY 2021

REV:	Date	Description	Appr.

Designed by: Designer
Drawn by: Author
Reviewed by: Checker
Submitted by: Approver
Submitted: 20 MAY 2021
File:
Scale: 1" = 1'-0"
Project Number: Project Number

Residence for Justin & Aimee Naylor

3441 Hidden Meadow Circle
Morgan, UT 84050

GENERAL STRUCTURAL NOTES

SHEET NUMBER
S-001

PLOT DATE: 5/20/2021 9:33:05 PM

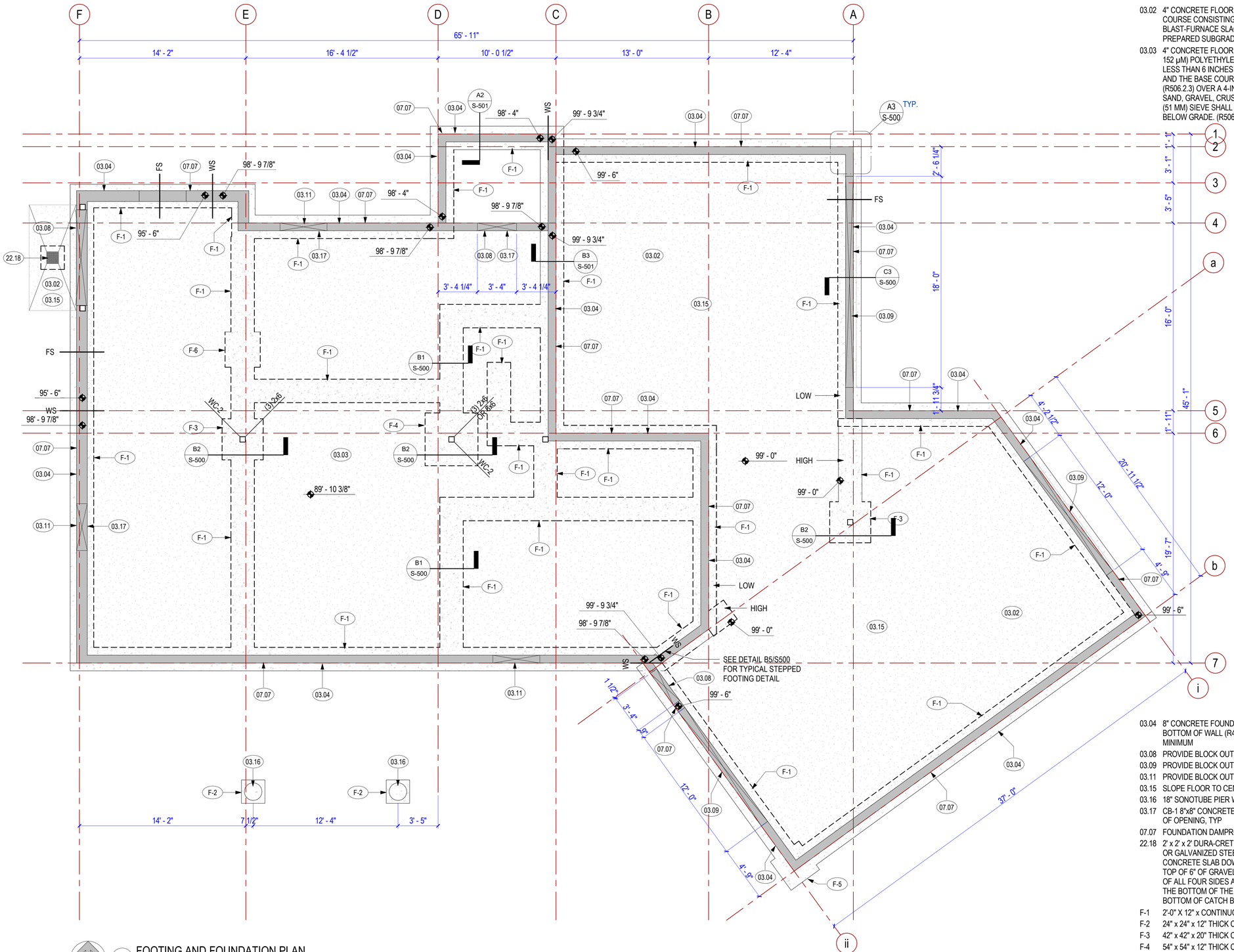

1 FOOTING AND FOUNDATION PLAN
1/4" = 1'-0"

KEYED NOTES

03.02 4" CONCRETE FLOOR SLAB (UNHEATED SPACES) OVER A 4-INCH-THICK (102 MM) BASE COURSE CONSISTING OF CLEAN GRADED SAND, GRAVEL, CRUSHED STONE OR CRUSHED BLAST-FURNACE SLAG PASSING A 2-INCH (51 MM) SIEVE SHALL BE PLACED ON THE PREPARED SUBGRADE WHEN THE SLAB IS BELOW GRADE. (R506.2.2 BASE)

03.03 4" CONCRETE FLOOR SLAB (INTERIOR, CONDITIONED SPACES) OVER A 6-MIL (0.006 INCH; 152 µM) POLYETHYLENE OR APPROVED VAPOR RETARDER WITH JOINTS LAPPED NOT LESS THAN 6 INCHES (152 MM) SHALL BE PLACED BETWEEN THE CONCRETE FLOOR SLAB AND THE BASE COURSE OR THE PREPARED SUBGRADE WHERE NO BASE COURSE EXISTS (R506.2.3) OVER A 4-INCH-THICK (102 MM) BASE COURSE CONSISTING OF CLEAN GRADED SAND, GRAVEL, CRUSHED STONE OR CRUSHED BLAST-FURNACE SLAG PASSING A 2-INCH (51 MM) SIEVE SHALL BE PLACED ON THE PREPARED SUBGRADE WHEN THE SLAB IS BELOW GRADE. (R506.2.2 BASE)

KEYED NOTES

03.04 8" CONCRETE FOUNDATION WALL WITH (3) #4 BARS HORIZONTAL - TOP, MIDDLE AND BOTTOM OF WALL (R404.1.2.2 AND TABLE R404.1.2(3)), TOP OF WALL 6" ABOVE GRADE MINIMUM

03.08 PROVIDE BLOCK OUT FOR NEW DOOR

03.09 PROVIDE BLOCK OUT FOR NEW OVERHEAD GARAGE DOOR

03.11 PROVIDE BLOCK OUT FOR NEW WINDOW

03.15 SLOPE FLOOR TO CENTRALIZED FLOOR DRAIN

03.16 18" SONOTUBE PIER WITH (6) #5 BARS VERTICAL AND #3 TIES @ 9" O.C.

03.17 CB-1 8"x8" CONCRETE HEADER BEAM WITH (2) #4 BARS BOTTOM. EXTEND 24" EACH SIDE OF OPENING, TYP

07.07 FOUNDATION DAMPROOFING ON ALL BELOW GRADE SURFACES

22.18 2' x 2' x 2' DURA-CRETE, OR EQUAL, PRE-CAST CONCRETE CATCH BASIN WITH CAST IRON OR GALVANIZED STEEL GRATE, CATCH BASIN SHALL DRAIN INTO SOIL BELOW. SLOPE CONCRETE SLAB DOWN TO CATCH BASIN AT 1/4" PER FOOT. INSTALL CATCH BASIN ON TOP OF 6" OF GRAVEL. DRILL 5 EVENLY SPACED 1" DIAMETER HOLES IN THE THIN WALLS OF ALL FOUR SIDES AND 8 EVENLY SPACED 1" DIAMETER HOLES IN THE THIN WALL OF THE BOTTOM OF THE CATCH BASIN. INSTALL FILTER FABRIC ON EXTERIOR SIDES AND BOTTOM OF CATCH BASIN.

F-1 2'-0" X 12" x CONTINUOUS CONCRETE FOOTING WITH (3) #4's CONTINUOUS

F-2 24" x 24" x 12" THICK CONCRETE FOOTING WITH #4 BARS AT 6" O.C. BOTH WAYS

F-3 42" x 42" x 20" THICK CONCRETE WITH (6) #4 BARS EACH DIRECTION

F-4 54" x 54" x 12" THICK CONCRETE WITH (8) #4 BARS EACH DIRECTION

F-5 36" x 36" x 12" THICK CONCRETE WITH (3) #4 BARS EACH DIRECTION

F-6 36" x 36" x 20" THICK CONCRETE WITH (4) #4 BARS EACH WAY

0' 1' 2' 4' 8' 16'
GRAPHIC SCALE 1/4" = 1'-0"

Rev.	Description	Date	Appr.

REV:
Submitted: 20 MAY 2021
File:
Scale: 1/4" = 1'-0"
Project Number: Project Number

Designed by: Designer
Drawn by: Author
Reviewed by: Checker
Submitted by: Approver

Residence for Justin & Aimee Naylor

3441 Hidden Meadow Circle
Morgan, UT 84050

FOOTING AND FOUNDATION PLAN

SHEET NUMBER
S-100

PLOT DATE: 5/20/2021 9:33:07 PM

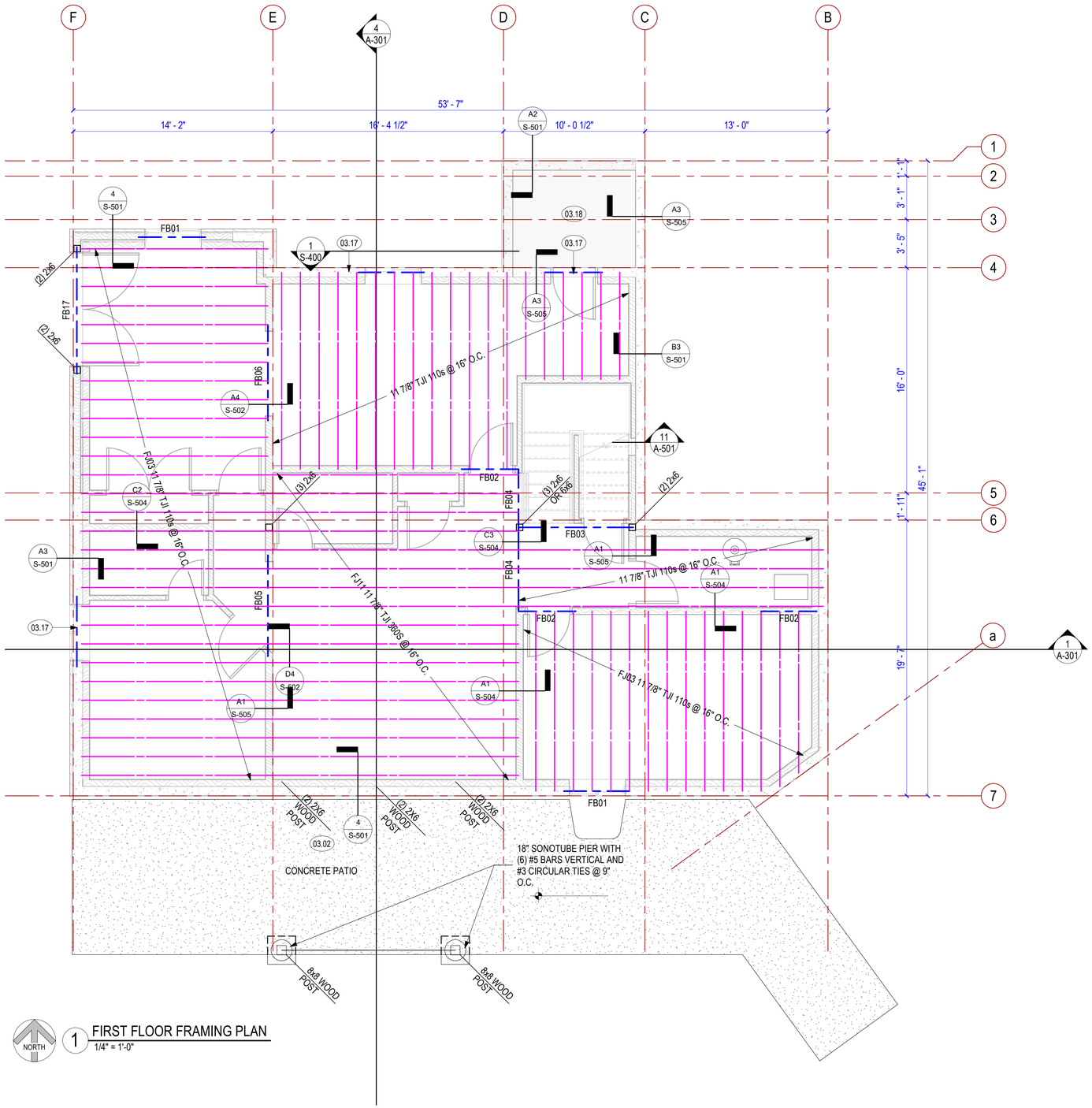

1 FIRST FLOOR FRAMING PLAN
1/4" = 1'-0"

FRAMING PLAN GENERAL NOTES

1. BEARING WALLS ARE 2x6 STUDS AT 16" O.C. U.N.O.
2. POSTS ARE (2) 2x6 STUDS U.N.O.
3. FLOOR AND ROOF SYSTEM SHALL CONSIST OF 3/4" T&G SHEATHING (48/24) SPAN RATING. GLUE SHEATHING AT ALL SUPPORTS. ABOVE SHEAR WALLS AND AT PANEL EDGES, NAIL 10d NAILS AT 6" O.C. IN FIELD.
4. ALL ROOF SHEATHING TO BE WD-1 UNLESS OTHERWISE NOTED, SEE WOOD DIAPHRAGM SCHEDULE.
5. ALL FLOOR SHEATHING TO BE WD-2 UNLESS OTHERWISE NOTED, SEE WOOD DIAPHRAGM SCHEDULE

KEYED NOTES

03.02 4" CONCRETE FLOOR SLAB (UNHEATED SPACES) OVER A 4-INCH-THICK (102 MM) BASE COURSE CONSISTING OF CLEAN GRADED SAND, GRAVEL, CRUSHED STONE OR CRUSHED BLAST-FURNACE SLAG PASSING A 2-INCH (51 MM) SIEVE SHALL BE PLACED ON THE PREPARED SUBGRADE WHEN THE SLAB IS BELOW GRADE. (R506.2.2 BASE)

03.17 CB-1 8"x8" CONCRETE HEADER BEAM WITH (2) #4 BARS BOTTOM. EXTEND 24" EACH SIDE OF OPENING, TYP

03.18 1-1/2" 22 GAGE VERCO PLB STEEL DECKING WITH 8" REINFORCED CONCRETE PORCH CAP, SEE DETAIL

BEAM SCHEDULE

FLOOR BEAMS
FB01 - (2) 2X8
FB02 - (2) 2X8
FB03 - (2) 2x10
FB04 - (2) 2X12
FB05 - (2) 2X12
FB06 - (2) 2X12
FB16 - (2) 2x12
FB17 - (2) 2X10

GRAPHIC SCALE 0' 1' 2' 4' 8' 16'
1/4" = 1'-0"

Rev.	Description	Date	Appr.

REV:

Designed by: Designer
Drawn by: Author
Reviewed by: Checker
Submitted by: Approver
Submitted: 20 MAY 2021
File:
Scale: As indicated
Project Number: Project Number

Residence for Justin & Aimee Naylor

3441 Hidden Meadow Circle
Morgan, UT 84050

1ST FLOOR FRAMING PLAN

SHEET NUMBER
S-101

PLOT DATE: 5/20/2021 9:33:08 PM

FRAMING PLAN GENERAL NOTES

1. BEARING WALLS ARE 2x6 STUDS AT 16" O.C. U.N.O.
2. POSTS ARE (2) 2x6 STUDS U.N.O.
3. FLOOR AND ROOF SYSTEM SHALL CONSIST OF 3/4" T&G SHEATHING (48/24) SPAN RATING. GLUE SHEATHING AT ALL SUPPORTS. ABOVE SHEAR WALLS AND AT PANEL EDGES, NAIL 10d NAILS AT 6" O.C. IN FIELD.
4. ALL ROOF SHEATHING TO BE WD-1 UNLESS OTHERWISE NOTED, SEE WOOD DIAPHRAGM SCHEDULE.
5. ALL FLOOR SHEATHING TO BE WD-2 UNLESS OTHERWISE NOTED, SEE WOOD DIAPHRAGM SCHEDULE

MARKS AND SYMBOLS

SNOW DRIFT, SEE CASE ON PLAN AND LOADING PER SCHEDULE

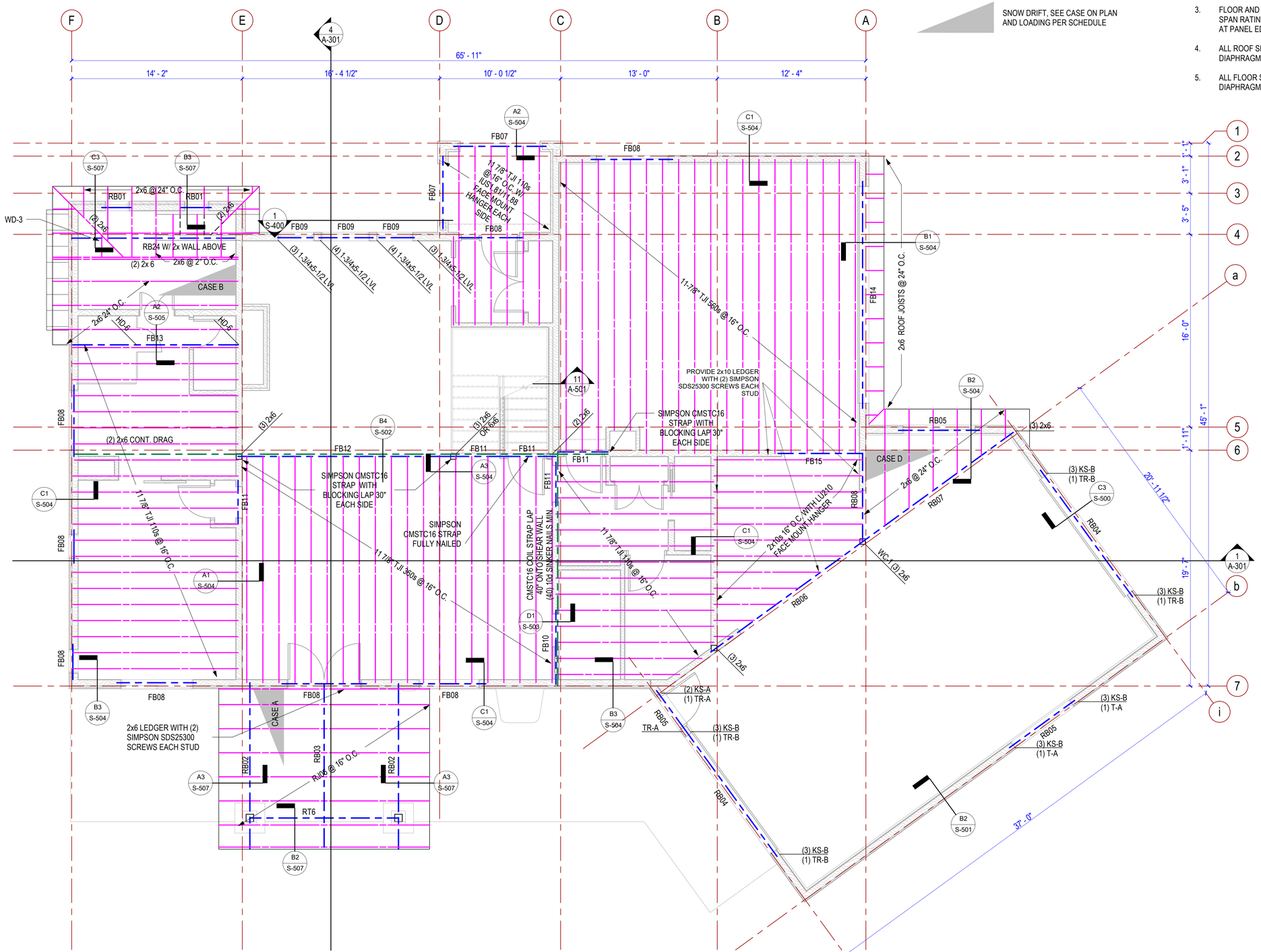

1 SECOND FLOOR FRAMING PLAN
1/4" = 1'-0"

NORTH

BEAM SCHEDULE

FLOOR BEAMS
FB07 - (2) 1-3/4" x 11-7/8" LVL
FB08 - (2) 2x10
FB09 - (2) 2x8
FB10 - (2) 1-3/4" x 11-7/8" LVL
FB11 - (2) 2x8
FB12 - (3) 1-3/4" x 14" LVL
FB13 - (4) 1-3/4" x 11-7/8" LVL
FB14 - (2) 1-3/4" x 14" LVL
FB15 - (2) 2X10

ROOF BEAMS
RB01 - (2) 2x6
RB02 - (2) 1-3/4" x 9-1/4" LVL
RB03 - (2) 1-3/4" x 9-1/4" LVL
RB04 - (2) 2x12
RB05 - (2) 2x8
RB06 - (2) 1-3/4" x 11-7/8" LVL
RB07 - (3) 1-3/4" x 14" LVL
RB08 - (2) 1-3/4" x 9-1/4" LVL
RB24 - (3) 1-3/4" x 7-1/4" LVL

ROOF TRUSS
RT7 - TIMBER TRUSS

ROOF JOIST
RJ04 2x6 @ 24" O.C.
RJ06 2x6

TRIMMER AND KING STUD SCHEDULE

KS-A = 2x6 DF#2
KS-B= 1-3/4"x5-1/2" LVL

TR-A = 2x6 DF#2
TR-B = 1-3/4"x5-1/2" LVL

NOTE TYPICAL KING STUD AND TRIMMER WHEN NOT CALLED OUT ON PLAN SHALL BE (2) KS-A AND (2) TR-A

0' 1' 2' 4' 8' 16'
GRAPHIC SCALE 1/4" = 1'-0"

Rev.	Description	Date	Appr.

REV:

Designed by: Designer
Drawn by: Author
Reviewed by: Checker
Submitted by: Approver
Submitted: 20 MAY 2021
File:
Scale: As indicated
Project Number: Project Number

Residence for Justin & Aimee Naylor

3441 Hidden Meadow Circle
Morgan, UT 84050

2ND FLOOR FRAMING PLAN

SHEET NUMBER
S-102

PLOT DATE: 5/20/2021 9:33:09 PM

MARKS AND SYMBOLS

SNOW DRIFT, SEE CASE ON PLAN AND LOADING PER SCHEDULE

FRAMING PLAN GENERAL NOTES

1. BEARING WALLS ARE 2x6 STUDS AT 16" O.C. U.N.O.
2. POSTS ARE (2) 2x6 STUDS U.N.O.
3. FLOOR AND ROOF SYSTEM SHALL CONSIST OF 3/4" T&G SHEATHING (48/24) SPAN RATING. GLUE SHEATHING AT ALL SUPPORTS. ABOVE SHEAR WALLS AND AT PANEL EDGES, NAIL 10d NAILS AT 6" O.C. IN FIELD.
4. ALL ROOF SHEATHING TO BE WD-1 UNLESS OTHERWISE NOTED, SEE WOOD DIAPHRAGM SCHEDULE.
5. ALL FLOOR SHEATHING TO BE WD-2 UNLESS OTHERWISE NOTED, SEE WOOD DIAPHRAGM SCHEDULE

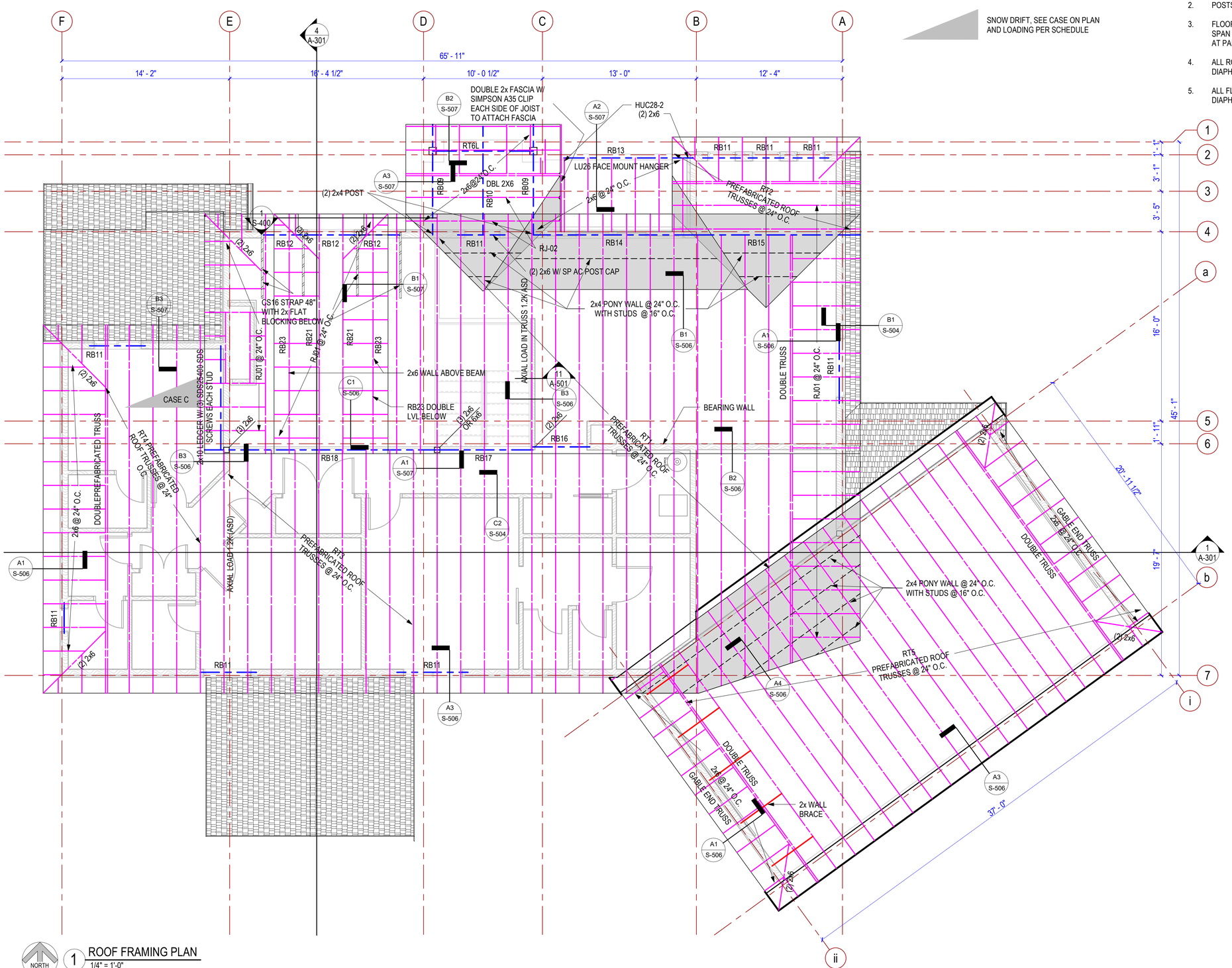

BEAM SCHEDULE

ROOF BEAMS
RB09 - (2) 2x8
RB10 - (2) 2x8
RB11 - (2) 2x10
RB12 - (2) 2x8
RB13 - (2) 2x12
RB14 - (3) 1-3/4"x11-7/8" LVL
RB15 - (2) 1-3/4"x11-7/8" LVL
RB16 - (2) 2x12
RB17 - (2) 1-3/4"x16"LVL
RB18 - (3) 1-3/4"x16" LVL
RB21 - (2) 1-3/4" x 9-1/4" LVL
RB23 - (2) 1-3/4" x 11-17/8" LVL LOW WITH 2x4 ENCLOSURE WALL ABOVE
RB25 - (2) 2x6

ROOF TRUSS
RT1 - PRE-MANUNFACTURED @ 24" O.C.
RT2 -PRE-MANUNFACTURED @ 24" O.C
RT3 -PRE-MANUNFACTURED JACK TRUSS @ 24" O.C
RT4 -PRE-MANUNFACTURED @ 24" O.C
RT5 -PRE-MANUNFACTURED @ 24" O.C
RT6 -TIMBER TRUSS

SEE UNBALANCED LOADING SCHEDULE FOR TRUSS LOADING REQUIREMENTS

SCHEDULE NOTES:
1. ALL WOOD TO WOOD CONNECTION HARDWARE PER SIMPSON STRONG-TIE UNLESS OTHERWISE NOTED
2. FMH = FACE MOUNT HANGER
3. TFH = TOP FLANGE HANGER

NORTH

1 ROOF FRAMING PLAN
1/4" = 1'-0"

GRAPHIC SCALE 0' 1' 2' 4' 8' 16' 1/4" = 1'-0"

Rev.	Description	Date	Appr.

REV:

Designed by: Designer
Drawn by: Author
Reviewed by: Checker
Submitted by: Approver
Submitted: 20 MAY 2021
File:
Scale: As indicated
Project Number: Project Number

Residence for Justin & Aimee Naylor

3441 Hidden Meadow Circle
Morgan, UT 84050

ROOF FRAMING PLAN

SHEET NUMBER
S-103

PLOT DATE: 5/20/2021 9:33:11 PM

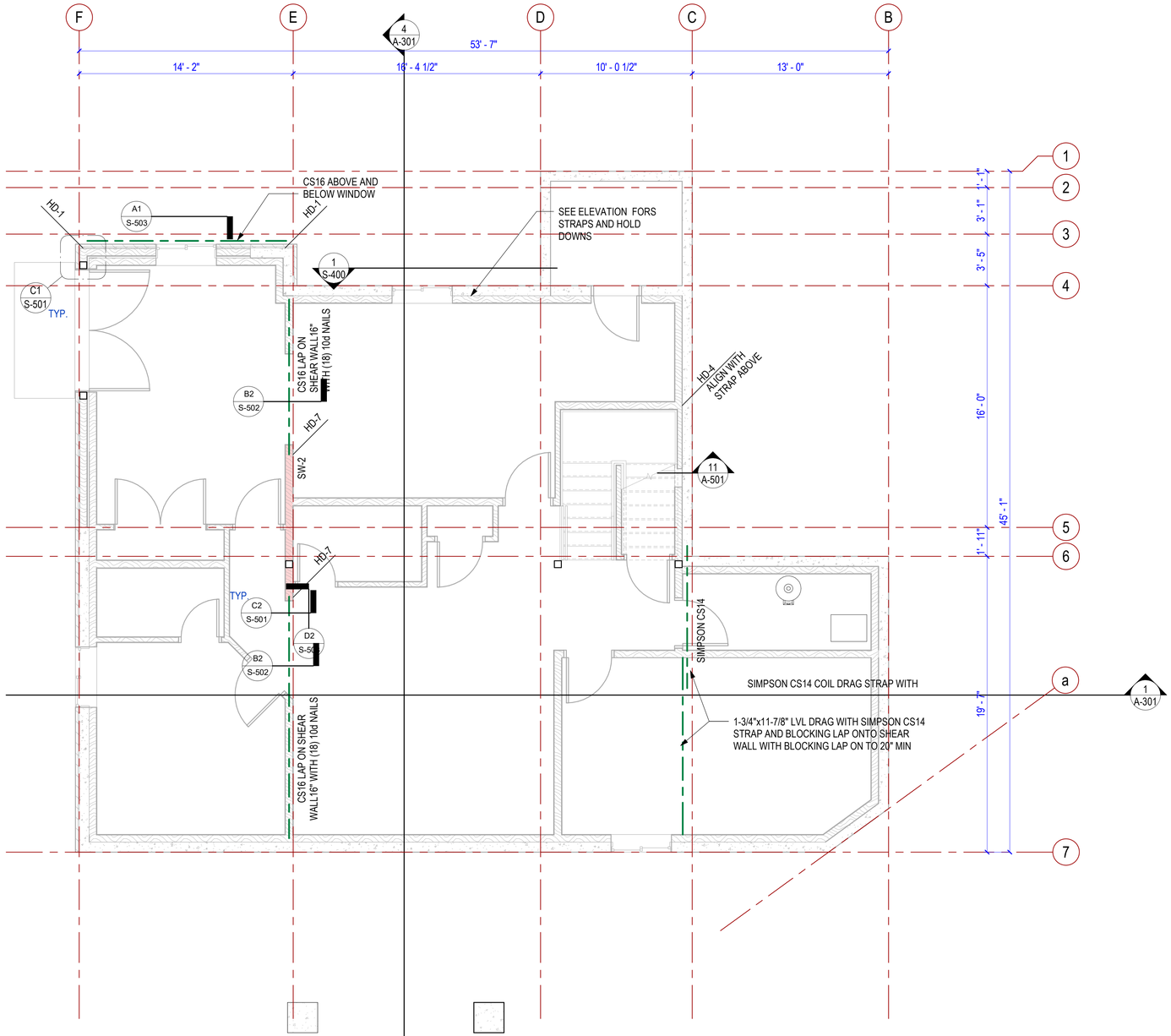

NORTH

1 BASEMENT SHEAR WALL PLAN
1/4" = 1'-0"

PLAN NOTES:

1. SW-# REFERS TO THE SHEARWALL MARK TYPE. REFER TO SHEAR WALL SHEATING SCHEDULE ON SHEET S-601.
2. ALL EXTERIOR SHEAR WALLS SHALL BE MARK SW-1 UNLESS OTHERWISE NOTED.

0' 1' 2' 4' 8' 16'
GRAPHIC SCALE 1/4" = 1'-0"

Rev.	Description	Date	Appr.

Designed by: Designer
Drawn by: Author
Reviewed by: Checker
Submitted by: Approver
Submitted: 20 MAY 2021
File:
Scale: 1/4" = 1'-0"
Project Number: Project Number
REV:

Residence for Justin & Aimee Naylor

3441 Hidden Meadow Circle
Morgan, UT 84050

BASEMENT SHEAR WALL PLAN

SHEET NUMBER
S-104

PLOT DATE: 5/20/2021 9:33:12 PM

PLAN NOTES:

1. SW-# REFERS TO THE SHEARWALL MARK TYPE. REFER TO SHEAR WALL SHEATING SCHEDULE ON SHEET S-601.
2. ALL EXTERIOR SHEAR WALLS SHALL BE MARK SW-1 UNLESS OTHERWISE NOTED.

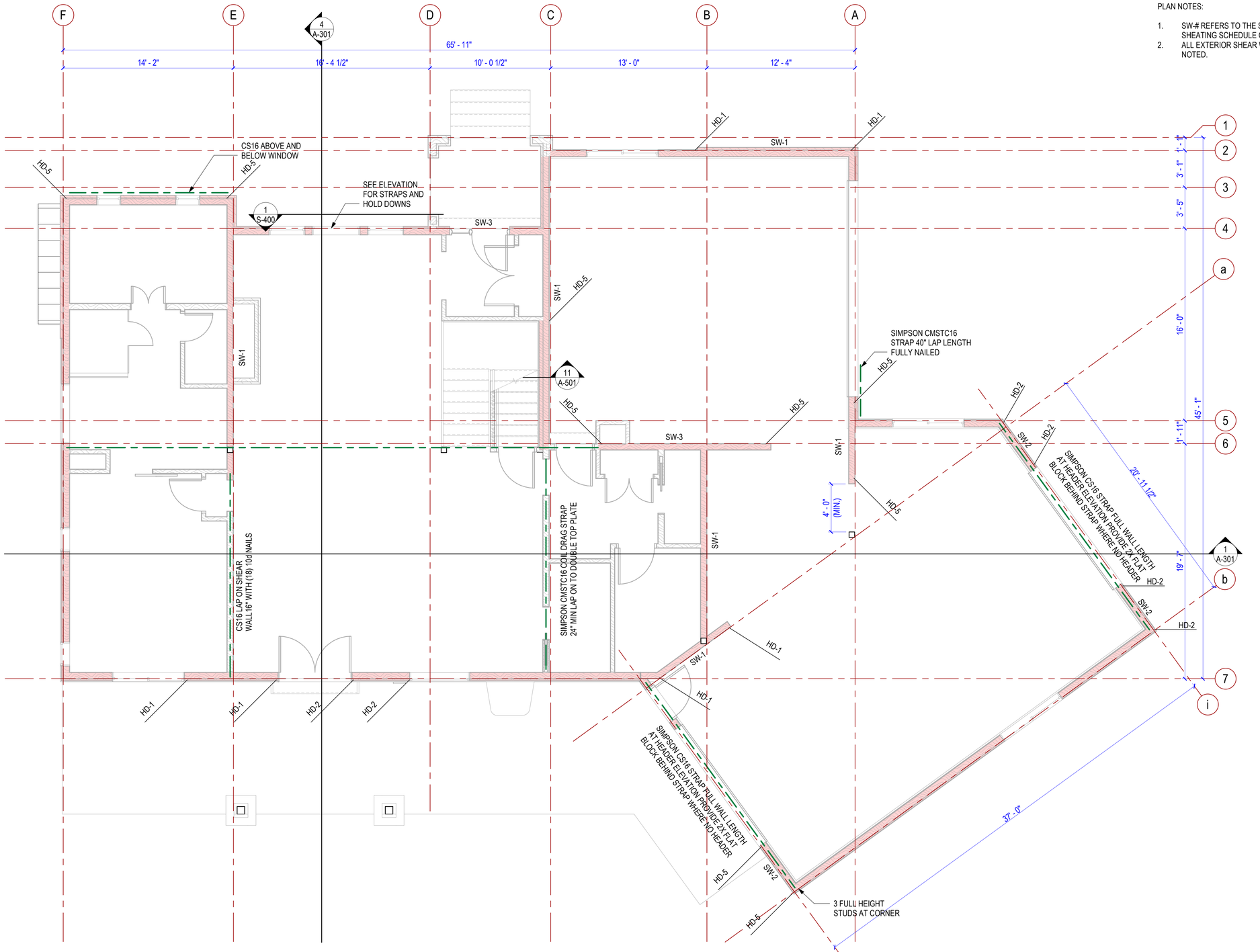

1 FIRST FLOOR SHEAR WALL PLAN
1/4" = 1'-0"

NORTH

GRAPHIC SCALE 0' 1' 2' 4' 8' 16' 1/4" = 1'-0"

PLOT DATE: 5/20/2021 9:33:13 PM

Rev.	Description	Date	Appr.

Designed by: Designer
Drawn by: Author
Reviewed by: Checker
Submitted by: Approver
Submitted: 20 MAY 2021
File:
Scale: 1/4" = 1'-0"
Project Number: Project Number
REV:

Residence for Justin & Aimee Naylor

3441 Hidden Meadow Circle
Morgan, UT 84050

FIRST FLOOR SHEAR WALL PLAN

SHEET NUMBER
S-105

PLAN NOTES:

1. SW-# REFERS TO THE SHEARWALL MARK TYPE. REFER TO SHEAR WALL SHEATING SCHEDULE ON SHEET S-601.
2. ALL EXTERIOR SHEAR WALLS SHALL BE MARK SW-1 UNLESS OTHERWISE NOTED.

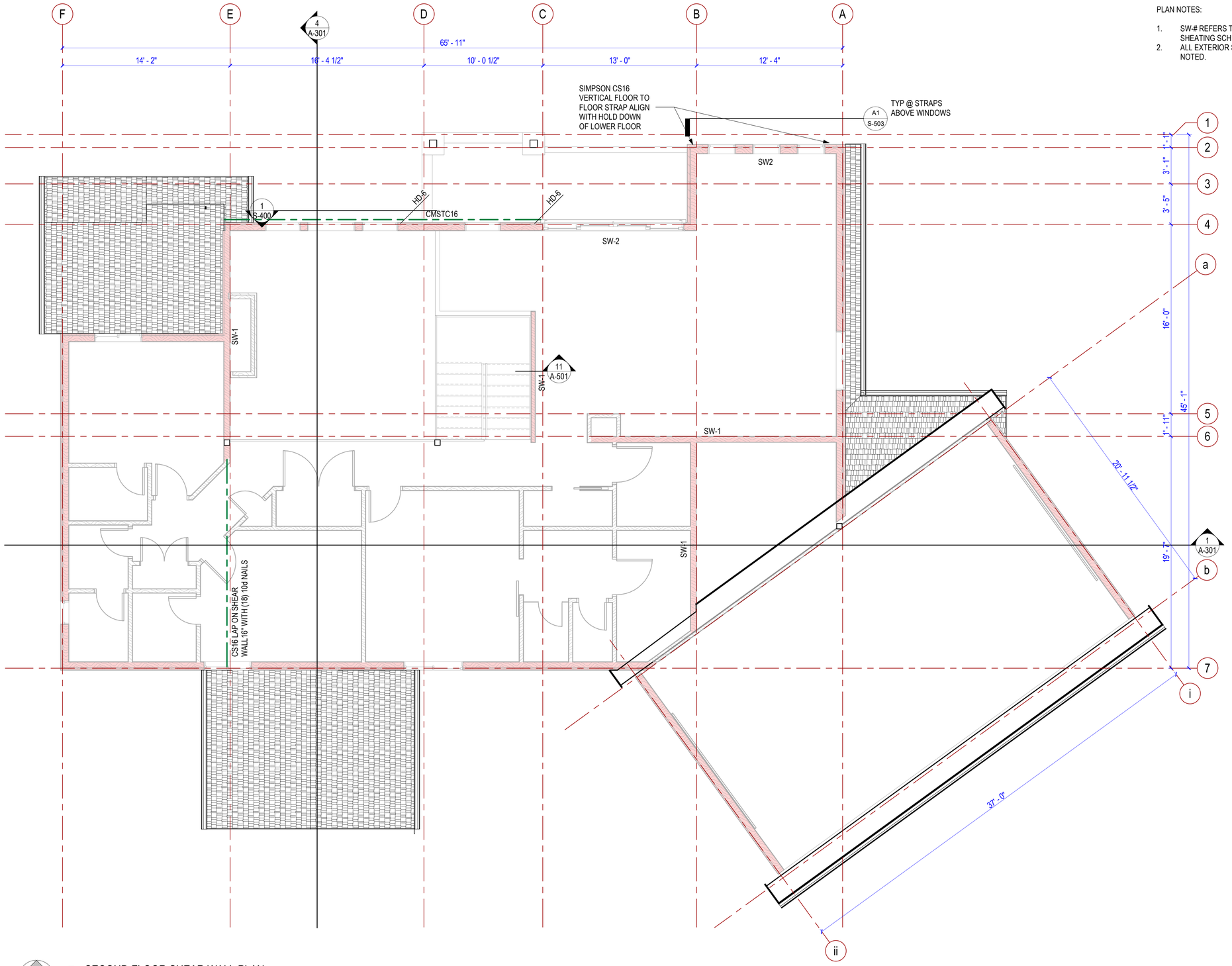

NORTH

1 SECOND FLOOR SHEAR WALL PLAN
1/4" = 1'-0"

GRAPHIC SCALE 0' 1' 2' 4' 8' 16' 1/4" = 1'-0"

Rev.	Description	Date	Appr.

REV:

Designed by: Designer
Submitted: 20 MAY 2021
Drawn by: Author
File:
Reviewed by: Checker
Scale: 1/4" = 1'-0"
Submitted by: Approver
Project Number: Project Number

Residence for Justin & Aimee Naylor

3441 Hidden Meadow Circle
Morgan, UT 84050

SECOND FLOOR SHEAR WALL PLAN

SHEET NUMBER
S-106

PLOT DATE: 5/20/2021 9:33:14 PM

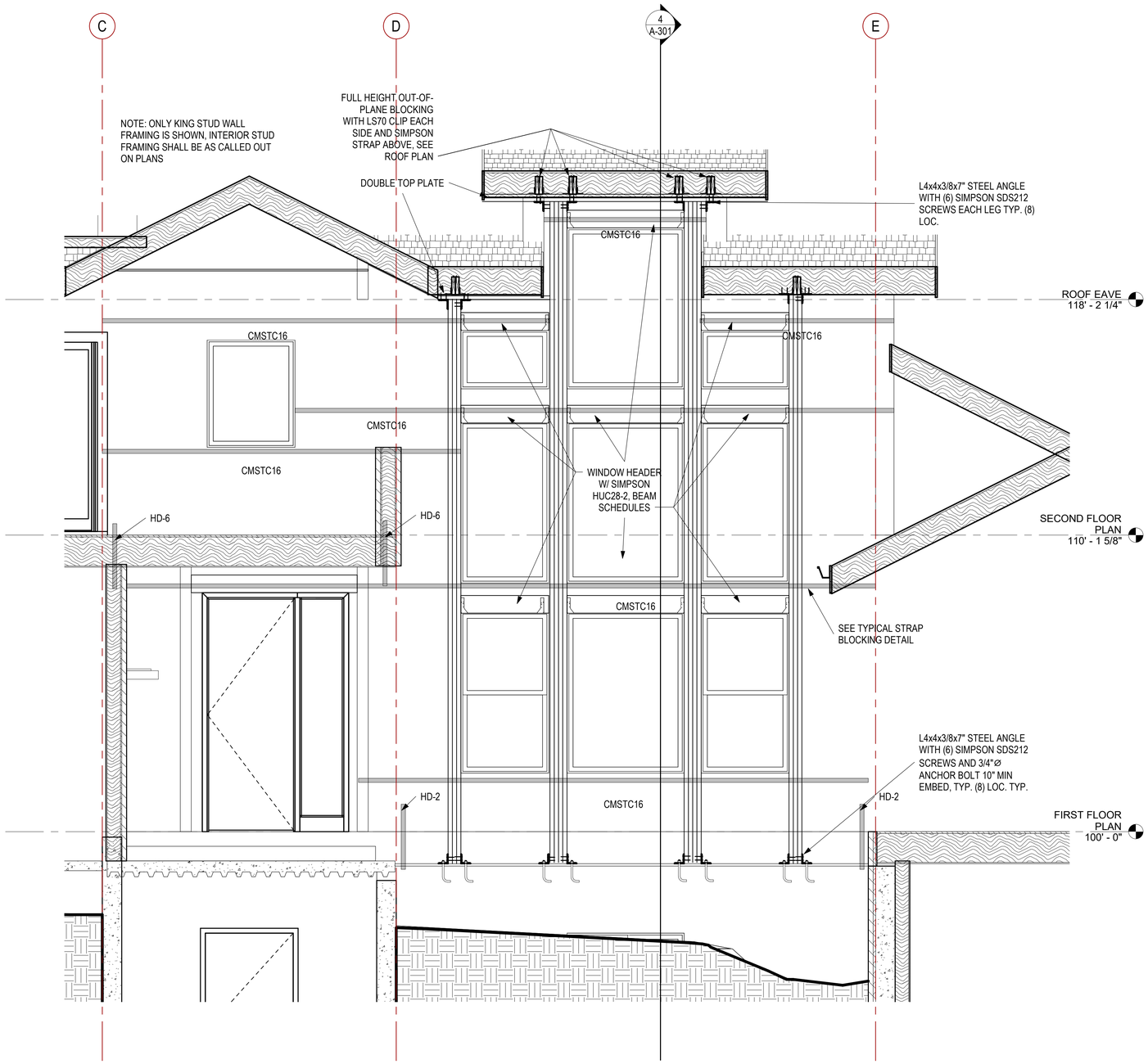

1 SHEAR WALL STRAPPING AROUND WINDOWS AND OUT-OF-PLANE LOAD TRANSFER
1/2" = 1'-0"

PROFESSIONAL ENGINEER
No. 9324712-2202
Timothy Peay Hogwood
LICENSED
STATE OF UTAH
MAY 20, 2021

Rev.	Description	Date	Appr.

Designed by: Designer
Drawn by: Author
Reviewed by: Checker
Submitted by: Approver
Submitted: 20 MAY 2021
File:
Scale: 1/2" = 1'-0"
Project Number: Project Number
REV:

Residence for Justin & Aimee Naylor

3441 Hidden Meadow Circle
Morgan, UT 84050

SHEAR WALL ELEVATION

SHEET NUMBER
S-400

PLOT DATE: 5/20/2021 9:33:15 PM

NOTE:
1. REBAR IN FOOTINGS AND FOUNDATION HAS BEEN OMITTED FOR CLARITY, SEE DETAILS AND SCHEDULES FOR REINFORCING
2. FOR PIPES LARGER THAN 12" ø CONTACT EOR

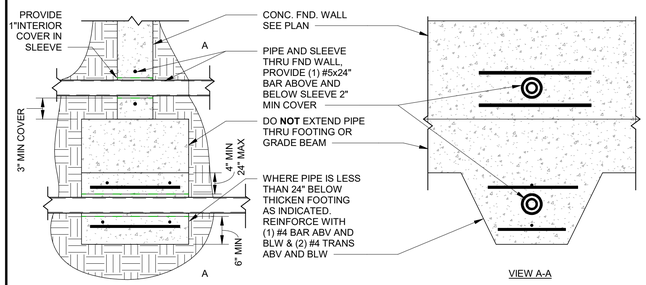

PIPE RUNNING THRU OR PERPINDICULAR TO FOOTING

C1 TYP PIPE CROSSING FOOTING DETAIL
3/4" = 1'-0"

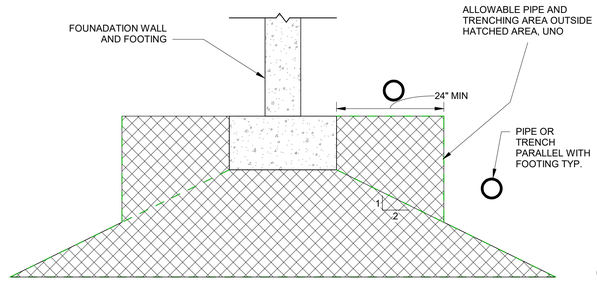

PIPR RUNNING PARALLEL TO FOOTING

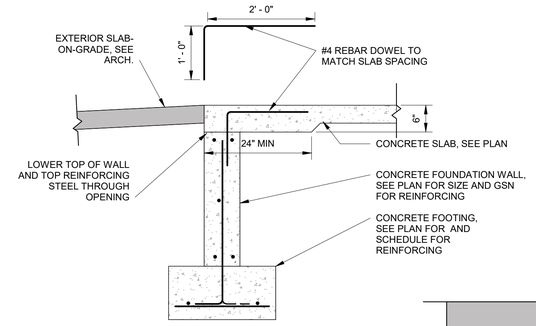

C3 TYPICAL AT DOOR OPENING
3/4" = 1'-0"

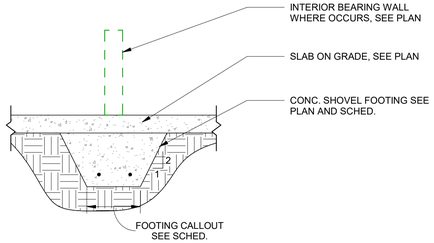

B1 TYP SHOVEL FOOTING
3/4" = 1'-0"

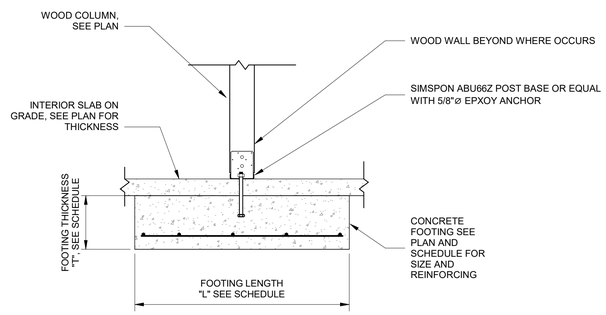

B2 INTERIOR WOOD COLUMN
3/4" = 1'-0"

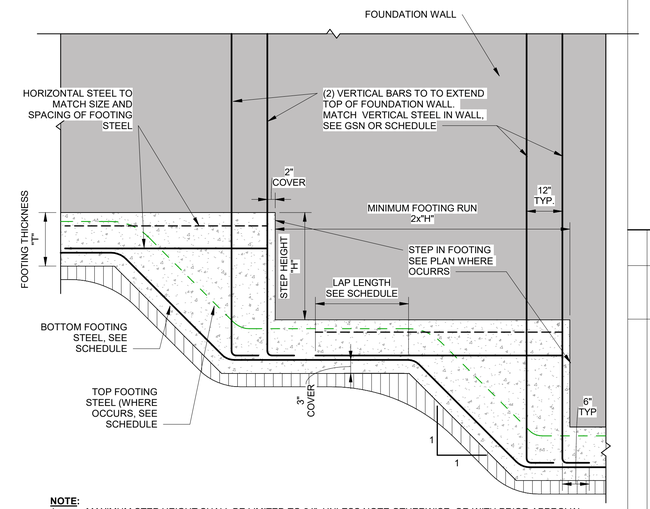

NOTE:
1. MAXIMUM STEP HEIGHT SHALL BE LIMITED TO 24", UNLESS NOTE OTHERWISE, OR WITH PRIOR APPROVAL FROM ENGINEER OF RECORD.
2. FOR SPLICE IN LONGITUDINAL STEEL, REBAR LAP SCEDULE.
3. TRANSVERSE STEEL IN FOOTING IS NOT SHWON FOR CLARITY, SEE SCHEDULE FOR SIZE AND SPACING

B5 TYPICAL STEP OF FOOTING DETAIL
3/4" = 1'-0"

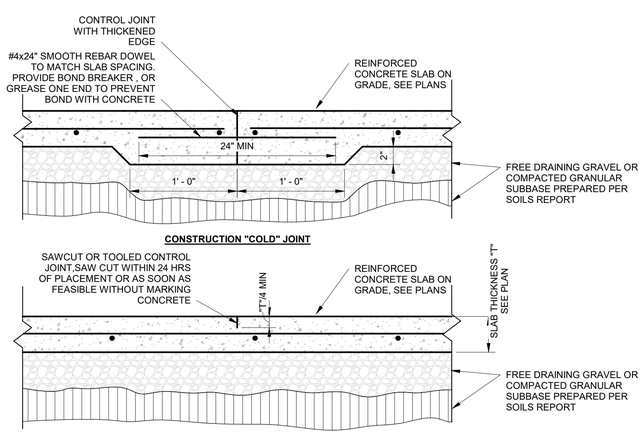

A1 TYPICAL SLAB JOINTS
1 1/2" = 1'-0"

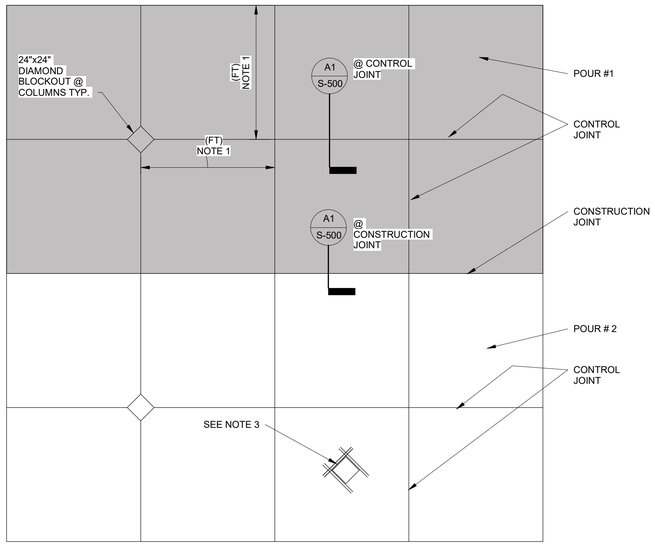

NOTES:
1. MAXIMUM CONTROL JOINT DIMENSION SHALL BE LIMITIED TO 30 x SLAB THICKNESS (T) IN INCHES/12. MAXIMUM SIDE TO SIDE RATION SHALL BE 1.5:1
2. SEE PLAN FOR SLAB THICKNESS (T), REINFORCING AND SPACING
3. PROVIDE (2) #4x4'-0" BARS EACH SIDE OF BLOCKOUTS WHERE CRACK CONTROL JOINTS ARE NOT ALIGNED WITH CORNERS OF DIAMOND BLOCKOUTS.

A2 SLAB JOINTS
3/16" = 1'-0"

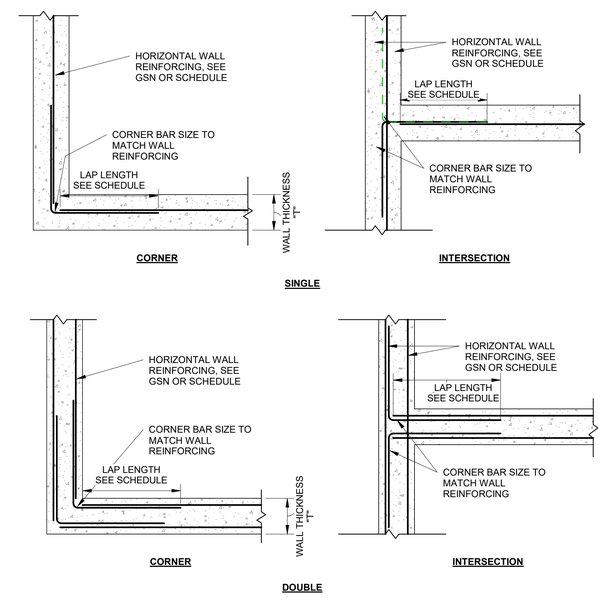

NOTE:
1. VERTICAL REINFORCING IS NOT SHOWN IN THE DETAIL, SEE GSN OR SCHEDULE FOR SIZE AND SPACING
2. CORNER BAR MAY BE REPLACED WITH BENT BAR AROUND CORNER PROVIDED LAP LENGTHS SHOWN IN SCHEDULE ARE FOLLOWED
3. TYPICAL DETAIL FOR FOOTINGS, FOUNDATION WALLS, AND RETAINING WALLS

A3 WALL CORNER AND INTERSECTION REINFORCING
3/4" = 1'-0"

PROFESSIONAL ENGINEER
No. 9324712-2202
Timothy Peay
LICENSED
STATE OF UTAH
MAY 20, 2021

Rev.	Description	Date	Appr.

REV:

Designed by: Designer
Drawn by: Author
Reviewed by: Checker
Submitted by: Approver
Submitted: 20 MAY 2021
File:
Scale: As indicated
Project Number: Project Number

Residence for Justin & Aimee Naylor

3441 Hidden Meadow Circle
Morgan, UT 84050

TYPICAL FOOTING AND FOUNDATION DETAILS

SHEET NUMBER
S-500

PLOT DATE: 5/20/2021 9:33:16 PM

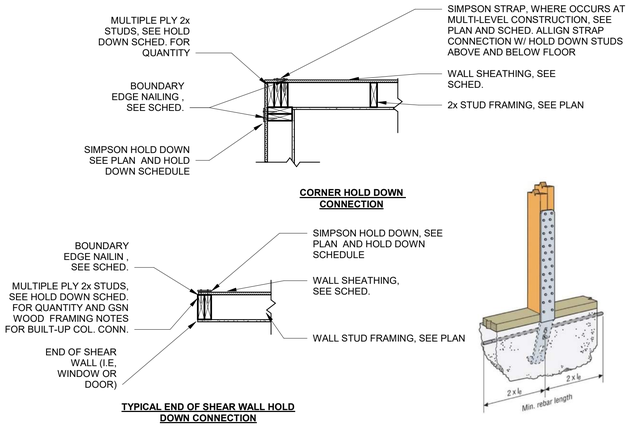

C1 TYPICAL EMBED HOLD DOWN DETAIL
3/4" = 1'-0"

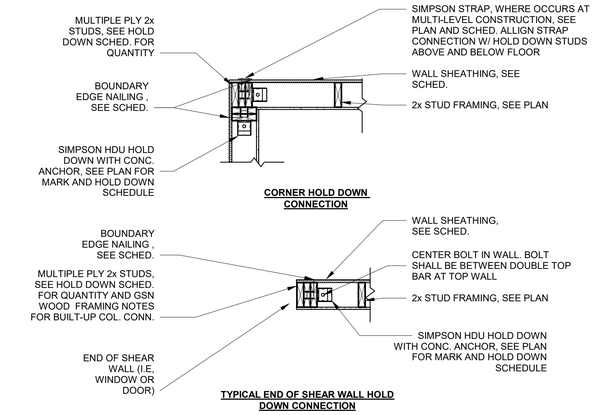

C2 5 - TYPICAL HOLD DOWN DETAIL
3/4" = 1'-0"

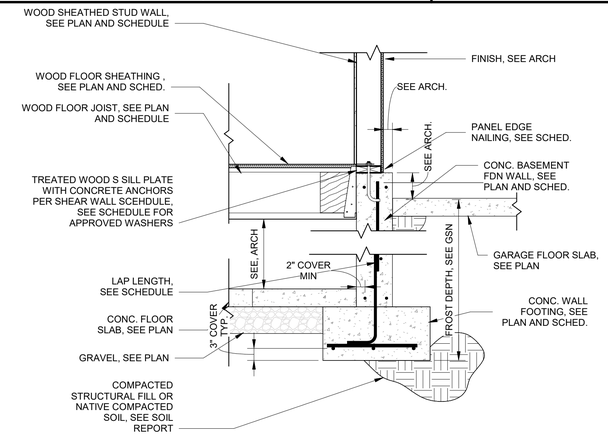

C3 BASEMENT FLOOR SUPPORT FACEMOUNT HANGER
3/4" = 1'-0"

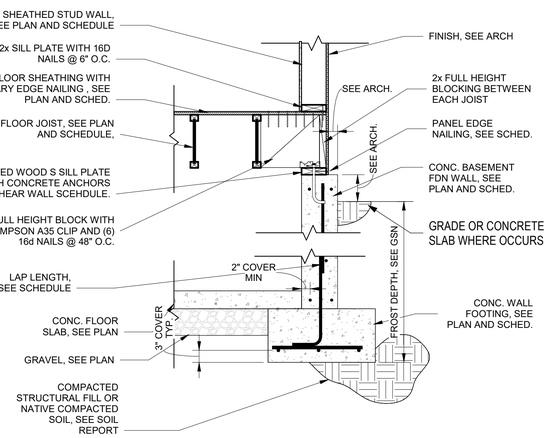

4 TYPICAL BASEMENT TO WALL CONNECTION JOIST RUN PARALLEL
3/4" = 1'-0"

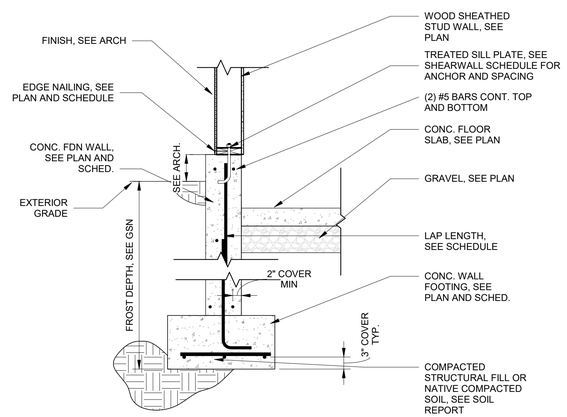

B2 TYPICAL GARAGE FLOOR CONNECTION
3/4" = 1'-0"

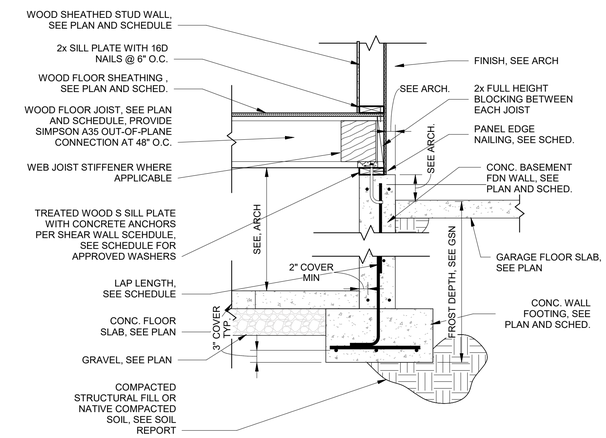

B3 GARAGE BASEMENT WALL CONNECTION
3/4" = 1'-0"

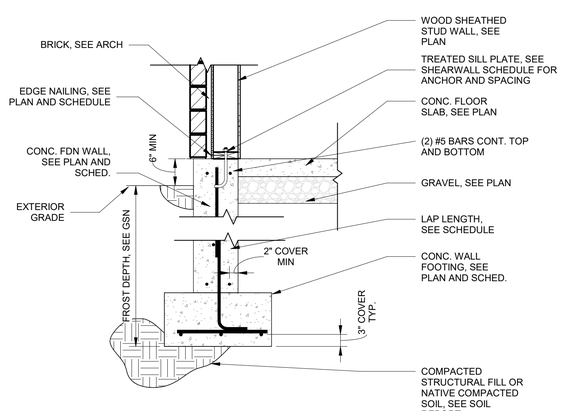

A1 TYPICAL WOOD WALL TO FOUNDATION WALL
3/4" = 1'-0"

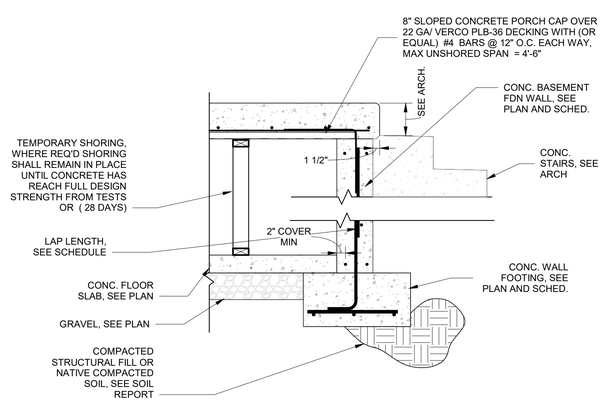

A2 TYPICAL COLD STORAGE PORCH CAP DETAIL
3/4" = 1'-0"

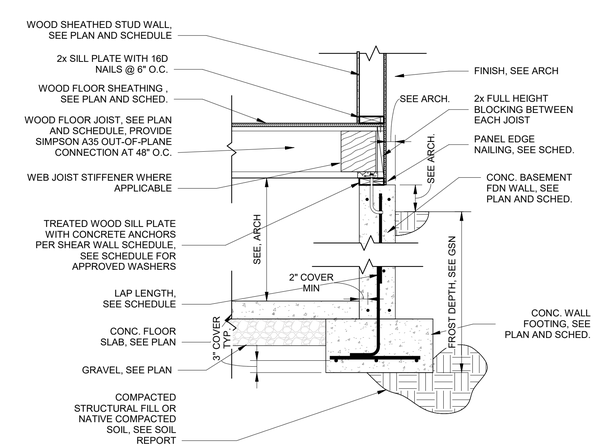

A3 TYPICAL BASEMENT TO WALL CONNECTION
3/4" = 1'-0"

PROFESSIONAL ENGINEER
No. 9324712-2202
Timothy Peay
Timpwood
LICENSED
STATE OF UTAH
MAY 20, 2021

Rev.	Description	Date	Appr.

REV:

Designed by: Designer
Submitted: 20 MAY 2021
Drawn by: Author
File:
Reviewed by: Checker
Scale: 3/4" = 1'-0"
Submitted by: Approver
Project Number: Project Number

Residence for Justin & Aimee Naylor

3441 Hidden Meadow Circle
Morgan, UT 84050

FOUNDATION AND SLAB DETAILS

SHEET NUMBER
S-501

PLOT DATE: 5/20/2021 9:33:18 PM

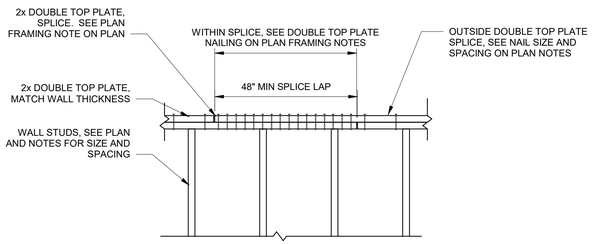

D1 TYP. TOP PLATE SPLICE DETAIL
3/4" = 1'-0"

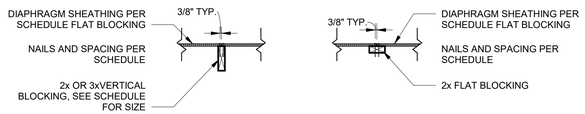

D2 TYPICAL DIAPHRAGM BLOCKING
3/4" = 1'-0"

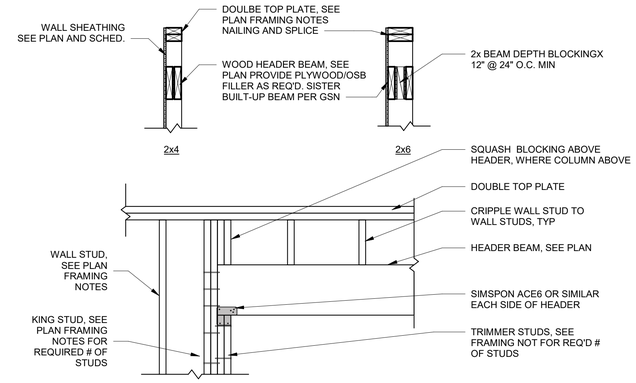

D4 TYPICAL HEADER DETAIL
3/4" = 1'-0"

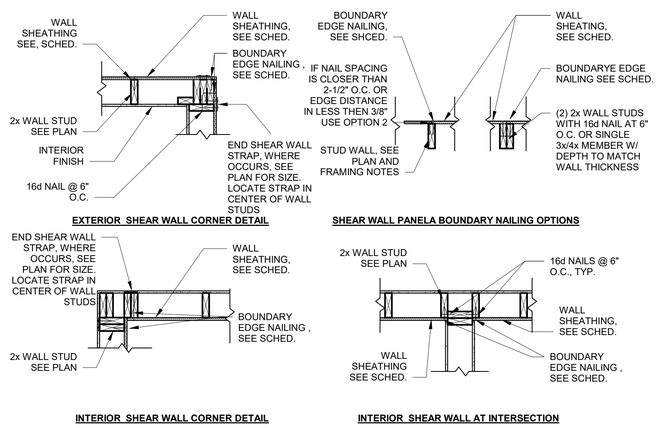

B1 TYPICAL SHEATHING AT WALL INTERSECTION
3/4" = 1'-0"

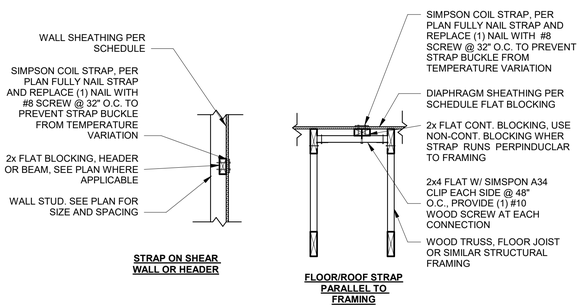

B2 2 - TYPICAL STRAP ON DIAPRAGM AND SHEAR WALL
3/4" = 1'-0"

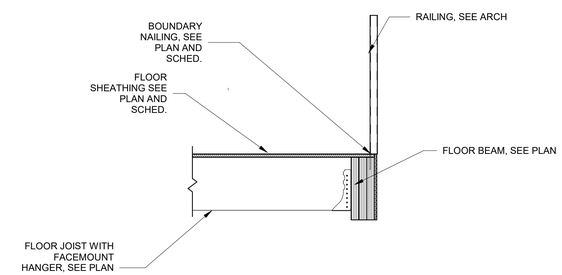

B4 LOFT JOIST CONNECTION
3/4" = 1'-0"

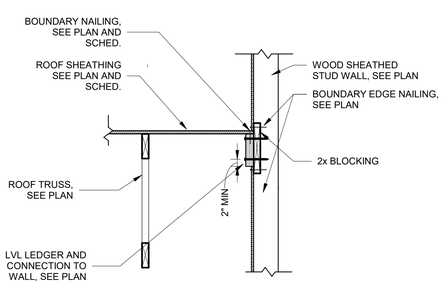

A1 ROOF TRUSS LEDGER
3/4" = 1'-0"

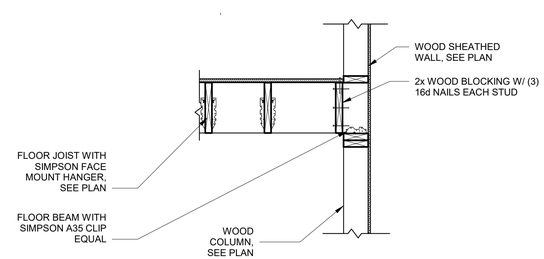

A2 BEAM TO COLUMN CONNECTION
3/4" = 1'-0"

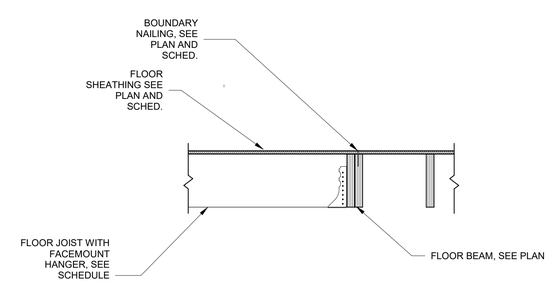

A4 BEAM TO BEAM CONNECTION
3/4" = 1'-0"

PROFESSIONAL ENGINEER
No. 9324712-2202
Timothy Pasch
Timpwood
STATE OF UTAH
LICENSED
MAY 20, 2021

Rev.	Description	Date	Appr.

REV:

Designed by: Designer
Drawn by: Author
Reviewed by: Checker
Submitted by: Approver
Submitted: 20 MAY 2021
File:
Scale: 3/4" = 1'-0"
Project Number: Project Number

Residence for Justin & Aimee Naylor

3441 Hidden Meadow Circle
Morgan, UT 84050

TYPICAL WOOD DETAILS

SHEET NUMBER
S-502

PLOT DATE: 5/20/2021 9:33:19 PM

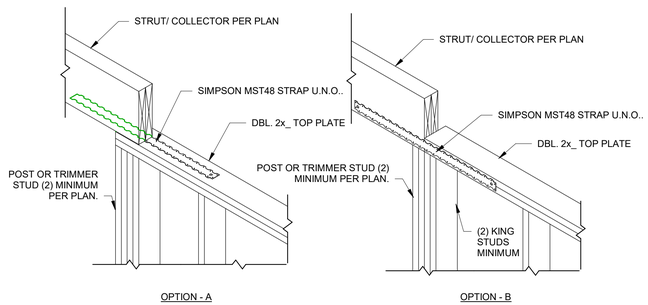

D1 TYPICAL WALL STRAP
3/4" = 1'-0"

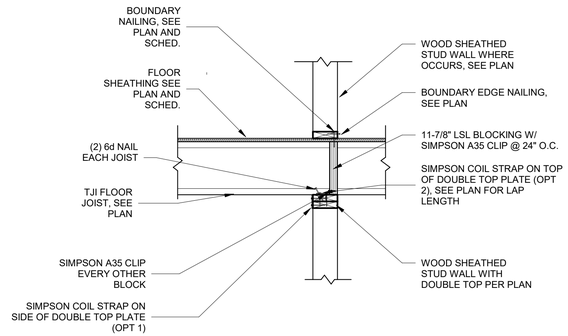

D2 TYPICAL FLOOR DRAG CONNECTION AT WALL
3/4" = 1'-0"

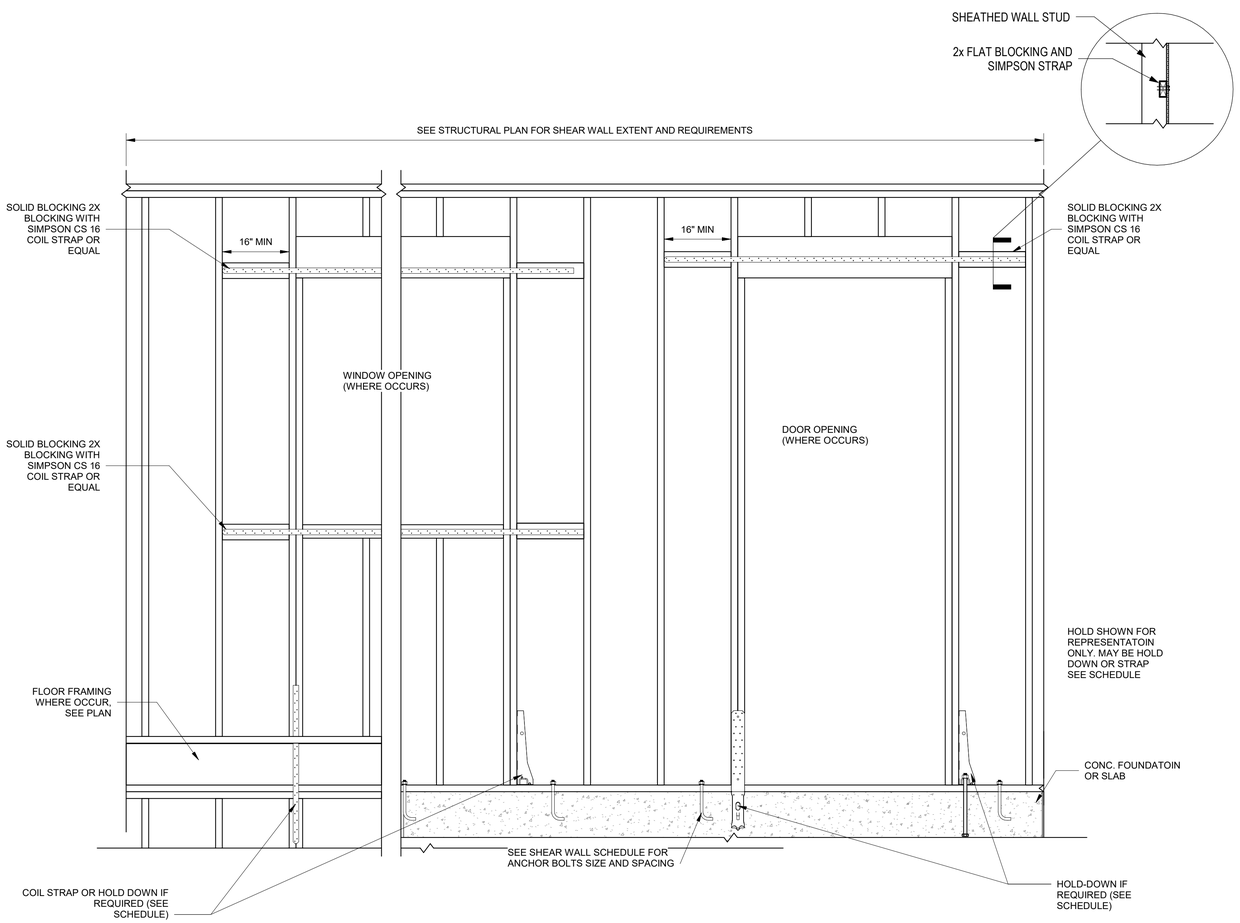

A1 SHEAR WALL FORCE TRANFER AROUND OPENINGS
3/4" = 1'-0"

PROFESSIONAL ENGINEER
No. 9324712-2202
Timothy Peay Hogwood
LICENSED
STATE OF UTAH
MAY 20, 2021

Rev.	Description	Date	Appr.

Designed by: Designer	Submitted: 20 MAY 2021	REV:	
Drawn by: Author	File:		
Reviewed by: Checker	Scale: 3/4" = 1'-0"		
Submitted by: Approver	Project Number: Project Number		

Residence for Justin & Aimee Naylor

3441 Hidden Meadow Circle
Morgan, UT 84050

TYPICAL WOOD FRAMING DETAILS

SHEET NUMBER
S-503

PLOT DATE: 5/20/2021 9:33:20 PM

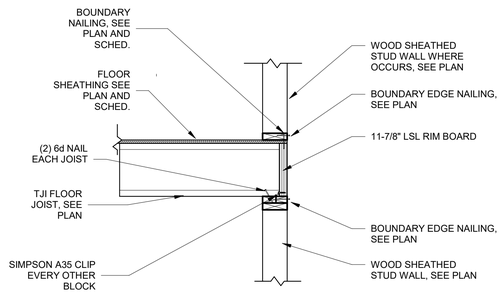

C1 N. TYPICAL FLOOR TO FLOOR CONNECTION1
3/4" = 1'-0"

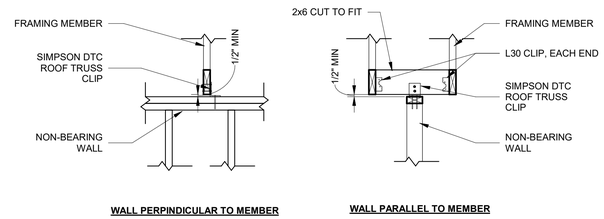

C2 L - INTERIOR NON-BEARING WALLS
3/4" = 1'-0"

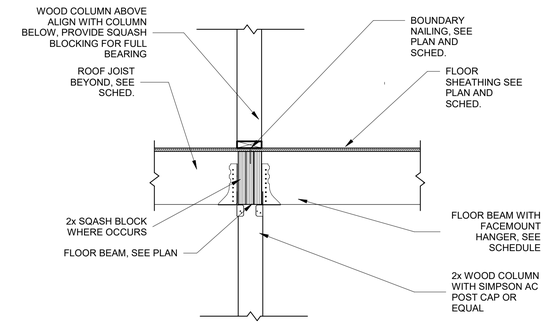

C3 FLOOR BEAM AND COLUMN CONNECTION
3/4" = 1'-0"

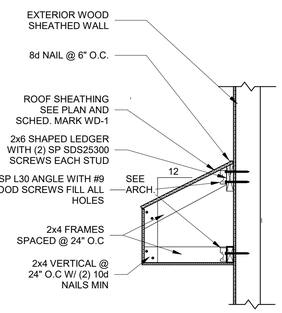

B1 TYPICAL EYE BROW
3/4" = 1'-0"

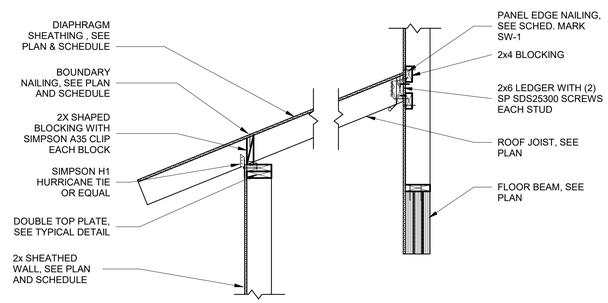

B2 JOIST TO WALL CONNECTION
3/4" = 1'-0"

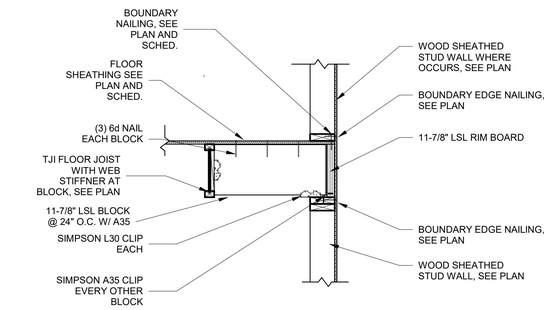

B3 TYPICAL FLOOR TO FLOOR CONNECTION O.O.P.
3/4" = 1'-0"

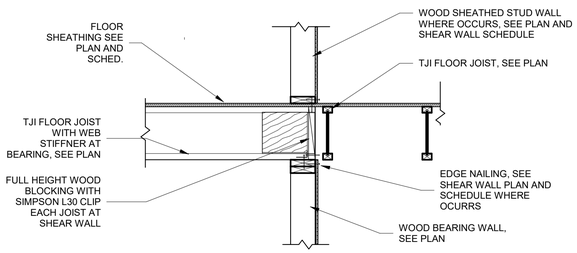

A1 P. TJI BEARING WALL CONN
3/4" = 1'-0"

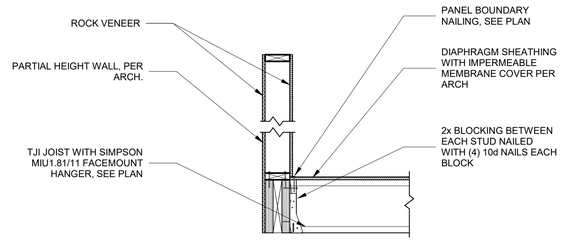

A2 EXTERIOR DECK BEAM CONNECTION
3/4" = 1'-0"

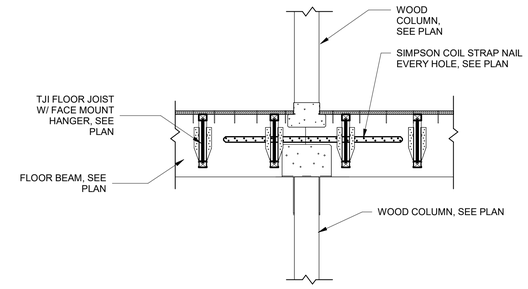

A3 WOOD COLUMN/BEAM SPLICE1
3/4" = 1'-0"

PROFESSIONAL ENGINEER
No. 9324712-2202
Timothy Peay Hogwood
LICENSED
STATE OF UTAH
MAY 20, 2021

Rev.	Description	Date	Appr.

REV:

Designed by: Designer
Drawn by: Author
Reviewed by: Checker
Submitted by: Approver
Submitted: 20 MAY 2021
File:
Scale: 3/4" = 1'-0"
Project Number: Project Number

Residence for Justin & Aimee Naylor

3441 Hidden Meadow Circle
Morgan, UT 84050

FLOOR DETAILS

SHEET NUMBER
S-504

PLOT DATE: 5/20/2021 9:33:21 PM

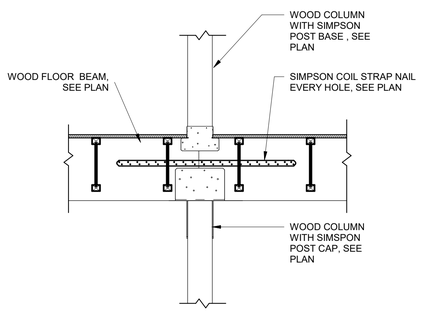

B1 LOFT BEAM TO CLUMN CONNECTION
3/4" = 1'-0"

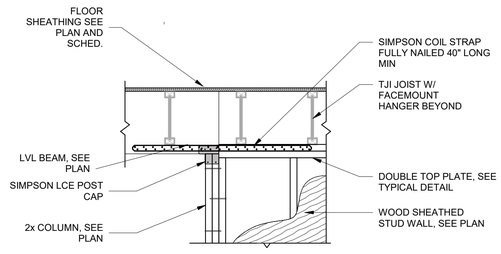

B2 LOFT BEAM TO WALL CONNECTION
3/4" = 1'-0"

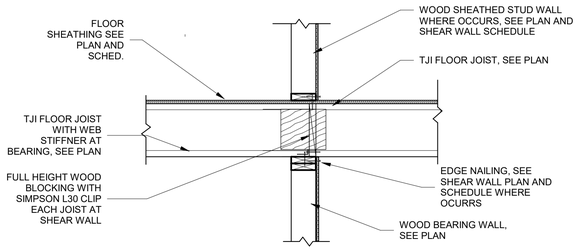

A1 INTERIOR TJI BEARING
3/4" = 1'-0"

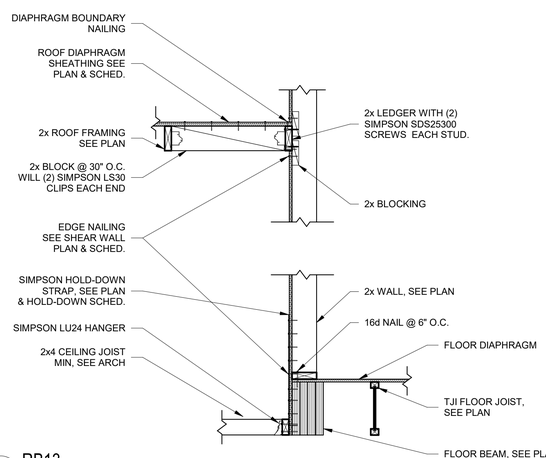

A2 RB13
3/4" = 1'-0"

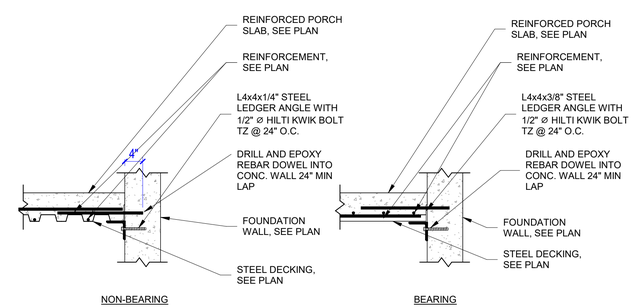

A3 PORCH CAP LEDGER
3/4" = 1'-0"

PROFESSIONAL ENGINEER
No. 9324712-2202
Timothy Peay
LICENSED
STATE OF UTAH
MAY 20, 2021

Rev.	Description	Date	Appr.

REV:

Designed by: Designer
Submitted: 20 MAY 2021
Drawn by: Author
File:
Reviewed by: Checker
Scale: 3/4" = 1'-0"
Submitted by: Approver
Project Number: Project Number

Residence for Justin & Aimee Naylor

3441 Hidden Meadow Circle
Morgan, UT 84050

FLOOR DETAILS

SHEET NUMBER
S-505

PLOT DATE: 5/20/2021 9:33:22 PM

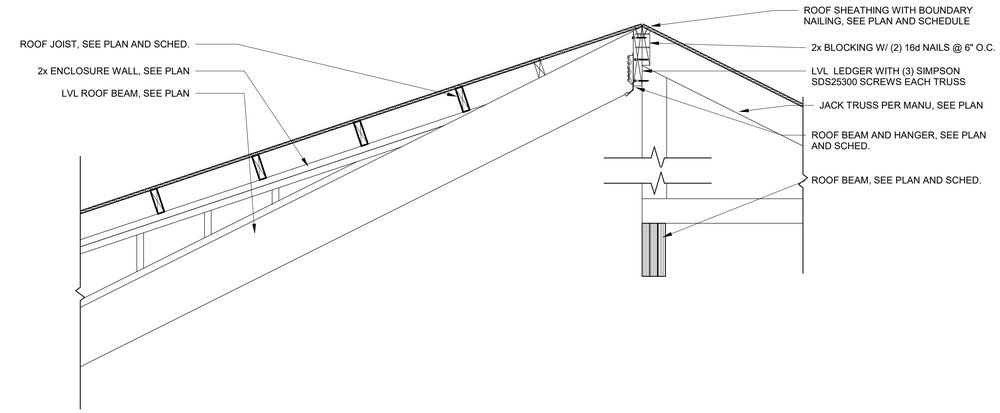

C1 ROOF STEP
3/4" = 1'-0"

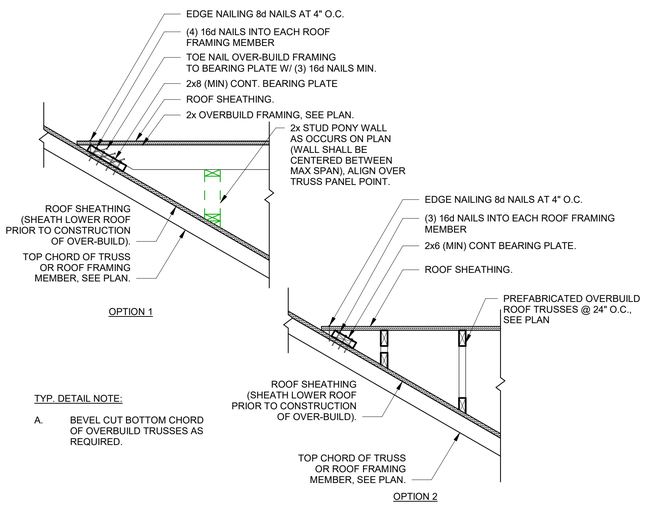

TYP. DETAIL NOTE:

A. BEVEL CUT BOTTOM CHORD OF OVERBUILD TRUSSES AS REQUIRED.

B1 TYPICAL OVERBUILD FRAMING
3/4" = 1'-0"

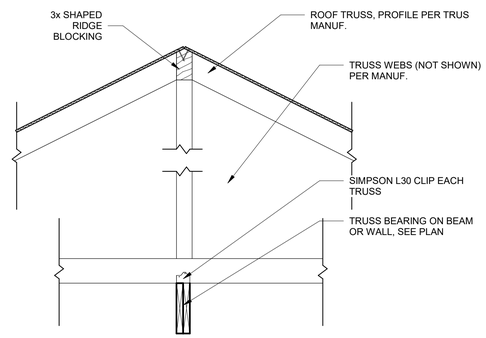

B2 TRUSS INTERIOR BEARING
3/4" = 1'-0"

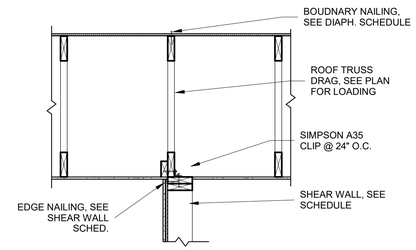

DRAG TRUSS PARALLEL TO WALL

B3 TRUSS IN-PLAN SHEAR TRANSFER TO SHEAR WALL
3/4" = 1'-0"

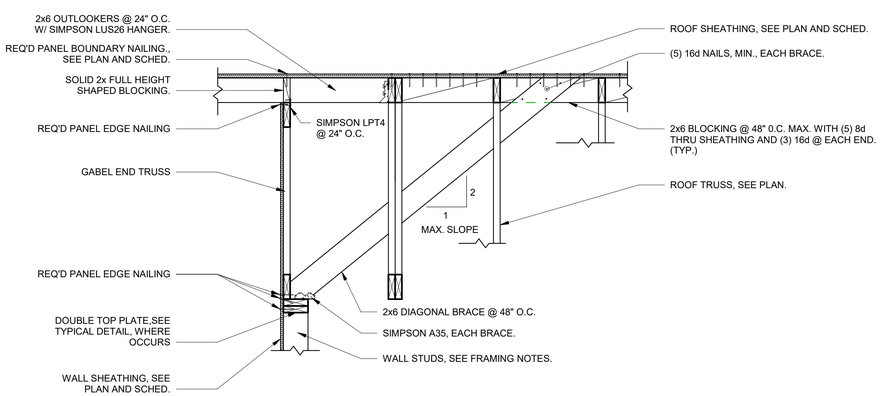

A1 GABLE TRUSS OOP CONNECTION
3/4" = 1'-0"

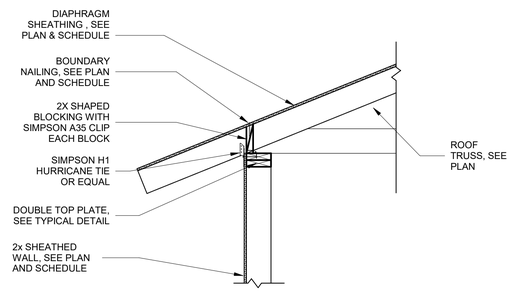

A3 TYPICAL TRUSS BEARIN CONNECTION
3/4" = 1'-0"

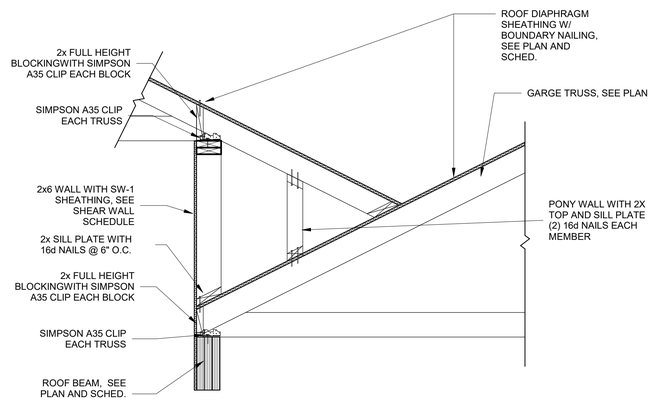

A4 GARAGE OVERBUILD
3/4" = 1'-0"

Rev.	Description	Date	Appr.

REV:

Designed by: Designer
Drawn by: Author
Reviewed by: Checker
Submitted by: Approver
Submitted: 20 MAY 2021
File:
Scale: 3/4" = 1'-0"
Project Number: Project Number

Residence for Justin & Aimee Naylor

3441 Hidden Meadow Circle
Morgan, UT 84050

ROOF DETAILS

SHEET NUMBER
S-506

PLOT DATE: 5/20/2021 9:33:23 PM

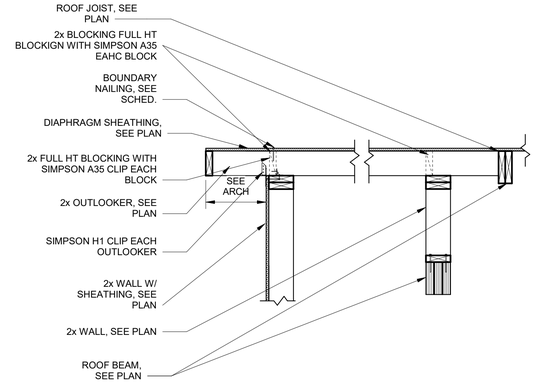

C3 OUTLOOKER OVER WALL AND BEAM
3/4" = 1'-0"

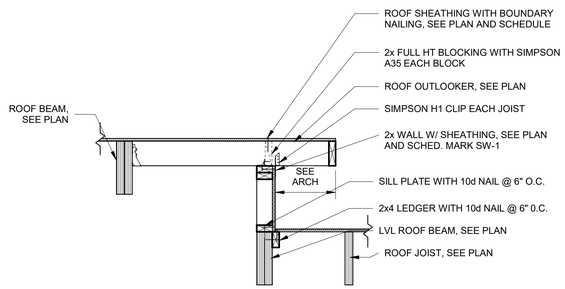

B1 2ND STORY ROOF STEP
3/4" = 1'-0"

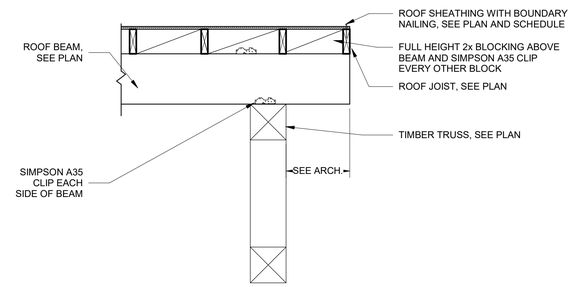

B2 TIMBER TRUSS BEARING CONNECTION
3/4" = 1'-0"

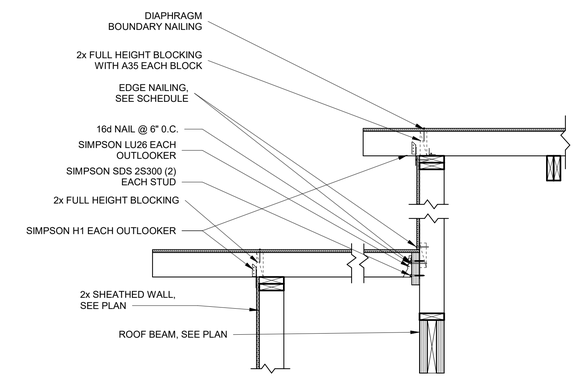

B3 MASTER BATHROOM ROOF STEP
3/4" = 1'-0"

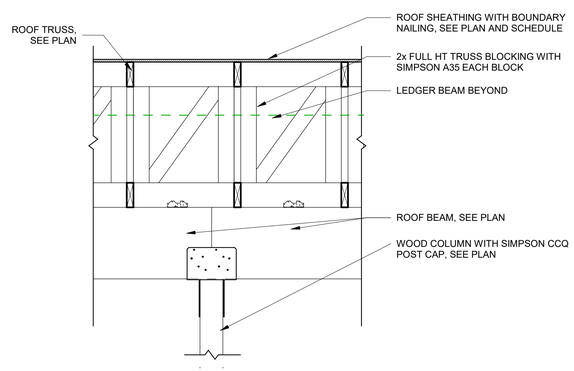

A1 RIDGE BEAM @ COLUMN
3/4" = 1'-0"

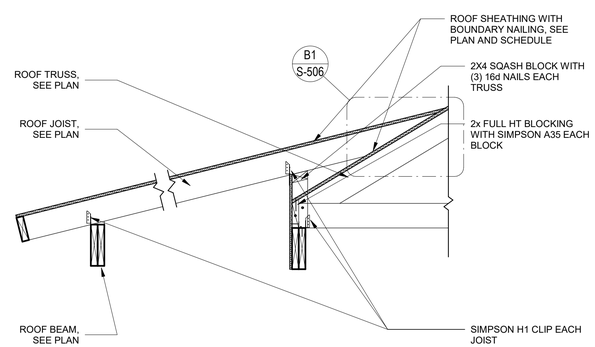

A2 OVERBUILD @ TRUSS BEARING
3/4" = 1'-0"

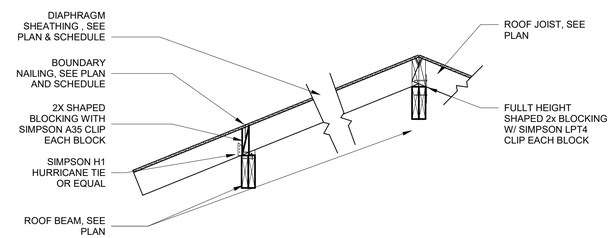

A3 TYP. JOIST ON BEAM1
3/4" = 1'-0"

PROFESSIONAL ENGINEER
No. 9324712-2202
Timothy Peay
Timberwood Design
LICENSED
STATE OF UTAH
MAY 20, 2021

Rev.	Description	Date	Appr.

Designed by: Designer	Submitted: 20 MAY 2021	REV:	
Drawn by: Author	File:		
Reviewed by: Checker	Scale: 3/4" = 1'-0"		
Submitted by: Approver	Project Number: Project Number		

Residence for Justin & Aimee Naylor

3441 Hidden Meadow Circle
Morgan, UT 84050

ROOF DETAILS

SHEET NUMBER
S-507

PLOT DATE: 5/20/2021 9:33:24 PM

CONCRETE WALL SCHEDULE

WALL MARK	THICKNESS (in)	VERT. REINF.	HORIZ WALL REINF.	WALL TYPE	COMMENTS
CW-8	8	#4 @ 18" O.C. .	#5 @ 12" O.C.	A	

1. PROVIDE CORNER BARS AT ALL CORNERS AND INTERSECTING WALLS, PER TYPICAL CORNER WALL REINFORCING DETAIL
2. WHEN A SINGLE CURTAIN OF REINFORCING IS SPECIFIED, PLACE THE VERTICAL REINFORCING IN THE CENTER OF THE WALL, TYPICAL, U.N.O..
3. WHEN A DOUBLE CURTAIN OF REINFORCING IS SPECIFIED, PLACE EACH CURTAIN OF STEEL AT THE FACE OF THE WALL WITH MINIMUM COVER AS SPECIFIED IN THE GENERAL NOTES.
4. PROVIDE DOWELS WITH STANDARD HOOKS TO THE STRUCTURE BELOW WITH SIZE AND SPACING TO ATTACH THE VERTICAL REINFORCING IN THE WALL ABOVE.
5. SPLICE VERTICAL REINFORCING AT FLOOR LEVELS ONLY, TYPICAL, U.N.O..
6. SPLICES IN HORIZONTAL REINFORCING IN ONE CURTAIN SHALL BE STAGGERED FROM SPLICES IN THE OPPOSITE CURTAIN A MINIMUM OF 4 FEET.

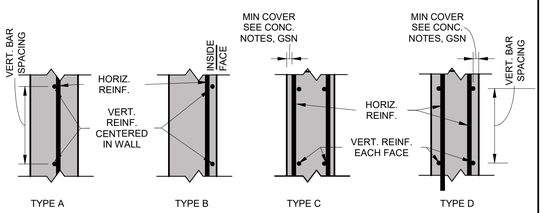

MARK	WIDTH	LENGTH	THICKNESS	LENGTHWISE REINF. QTY	LENGTHWISE REINF. SIZE	CROSSWISE REINF. QTY	CROSSWISE REINF. SIZE	CROSSWISE REINF. SPACING	COMMENT

CONCRETE FOOTING NOTES:

1. BOTTOM REINFORCING REBAR SHALL HAVE A MINIMUM OF 3" CONCRETE CLEAR COVER (UNO).
2. TOP REINFORCING REBAR SHALL HAVE A MINIMUM OF 2" OF CONCRETE CLEAR COVER (UNO). TOP REINFORCING WITH MORE THAN 12" OF CONCRETE BELOW SHALL HAVE INCREASE LAP LENGTHS AS NOTED IN THE CONCRETE LAP LENGTH SCHEDULE.
3. EARTH FORMED FOOTING INCREASE LENGTH AND WIDTH AN ADDTIONAL 6" (UNO)
4. CONTINOUS FOOTING REBAR SHALL RUN CONTINOUS THROUGH SPREAD FOOTING (UNO)
5. SEE FOOTING AND FOUNDATION PLAN FOR FOOTING CALLOUTS, NOTE SOME FOOTING MARK MAY NOT BE USED.
6. SEE GENERAL STUCTURAL NOTES FOR ADDITIONAL INFORMATION

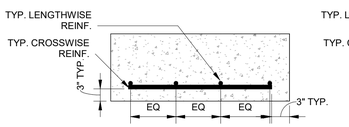

TYP. BOTTOM REINF. FOOTING

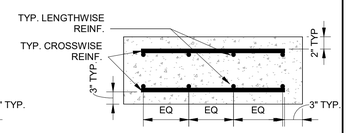

TYP. TOP & BOTTOM REINF. FOOTING

ADHESIVE EMBEDMENT SCHEDULE

THREADED ROD (REBAR DOWEL) SIZE	MINIMUM EMBEDMENT DEPTH INTO CONCRETE OR GROUTED MASONRY CELL	ALLOWABLE TENSION/SHEAR CAPACITY	EPOXY TYPE AND MANUFACTURER
#3 (3/8" Φ)	3-3/8"	820/400	SEE GSN
#4 (1/2" Φ)	4-1/2"	1255/600	SEE GSN
#5 (5/8" Φ(	5-5/8"	1670/800	SEE GSN
#6 (3/4" Φ)	6-3/4"	2145/1000	HILT HIT RE 500, SEE GSN
#7 (7/8" Φ)	7-7/8"	2500/1200	HILT HIT RE 500, SEE GSN
#8 (1" Φ)	9"	3000/1500	HILT HIT RE 500, SEE GSN

ADHESIVE NOTES

1. SPECIFIC EMBEDMENT DEPTHS NOTED ON THE PLAN OR DETAILS CONTROL OVER THIS SCHEDULE
2. FOLLOW MANUFACTUERERS RECOMMENDATIONS AND APPROVED INSTRUCTIONS FOR FOR HOLE SIZE AND PREPERATION.
3. PROVIDE 3" MINIMUM EDGE DISTANCE TO CENTER OF HOLE MIN,
4. IF MINIMUM EMBEDMENT DEPTH IS NOT POSSIBLE CONTACT EOR PRIOR TO PLACING ANCHOR
5. FOR ADDTIONAL INFORMATION AND DIRECTIONS SEE "ANCHOR BOLTS" SECTION OF GSN UNDER "EPOXY ANCHOR BOLTS SECTION

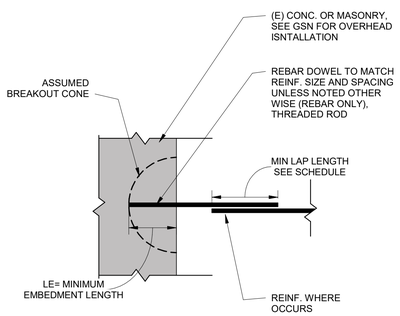

TYPICAL REBAR DEVELOPMENT/LAP LENGTH SCHEDULE

NORMAL WEIGHT REBAR SPLICE/LAP LENGTH SCHEDULE (150 pcf)

BAR SIZE	2500 psi S (in)	2500 psi T (in)	3000 psi S (in)	3000 psi T (in)	3500 psi S (in)	3500 psi T (in)	4000 psi S (in)	4000 psi T (in)	4500 psi S (in)	4500 psi T (in)	5000 psi S (in)	5000 psi T (in)
#3	18	23	16	21	15	20	14	18	13	17	13	17
#4	24	31	22	28	20	26	19	25	18	23	17	22
#5	30	39	27	36	25	33	24	31	22	29	21	28
#6	36	47	33	43	30	40	28	37	27	35	25	33
#7	53	68	48	62	44	58	42	54	39	51	37	48
#8	60	78	55	71	51	66	47	62	45	58	42	55
#9	68	88	62	80	57	74	54	70	50	66	48	62
#10	76	99	70	90	64	84	60	78	57	74	54	70
#11	89	116	82	106	76	98	71	92	67	87	63	82
#14	129	168	118	153	109	142	102	133	96	125	91	119
#18	229	298	209	272	194	252	181	236	171	222	162	211

SCHEDULE NOTES:

1. SCHEDULE IS INDTENED FOR USE WITH ALL BAR SPLICES IN CONCRETE WALLS FOUNDATIONS AND FOOTINGS.
2. TABULATED VALUES ARE THE MINIMUM REQUIRED LAP LENGTH PER CODE. LONGLER LAP/DEVELPMENT LENGTHS MAY BE USED AS REQ'D FOR CONSTRUCTIBILITY, ETC.
3. TIESS AND STIRRUPS SHALL NOT BE SPLICED.
4. TABULATED VALUES OF FOR GRADE 60 (fy=60ksi) REBAR. FOR GRADE 75 (fy= 75ksi) MULTIPLY TABLE VALUES BY 1.25 AND FOR GRADE 80 (fy=80ksi) MULTIPLY TABLE VALUE BY 1.33
5. EPOXY COATED OR ZINC AND EPOXY DUAL COATED BARS WITH CLEAR COVER LESS THAN $3d_b$ WITH OR CLEAR SPACING LESS THAN $6d_b$ MULTIPLY TABULATED VALUE BY 1.5, OTHERWISE FOR ALL OTHER CASES MULTIPLY TABULATED VALUE BY 1.2
6. FOR LIGHTWEIGHT CONCRETE MULTIPLY VALUE BY 1.33
7. S= STANDARD REBAR AND T= TOP REABAR. TOP REBAR IS ANY BAR THAT HAS 12" OR MORE OF FRESH CONCRETE BELOW THE THE BAR AT THE TIME THE CONCRETE IS PLACED.
8. SEE GENERAL STRUCTURAL NOTES FOR ADDITIONAL INFORMATION

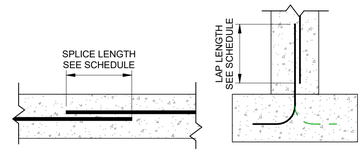

HOOKED END DEVELOPMENT LENGTH SCHEDULE

BAR SIZE AND DIAMETER (in)	2500psi (in)	3000psi (in)	3500psi (in)	4000psi (in)	4500psi (in)	5000psi (in)
#3 (3/8")	7	6	6	6	6	6
#4 (1/2)	9	8	8	7	7	6
#5 (5/8(	11	10	9	9	8	8
#6 (3/4)	13	12	11	10	10	9
#7 (7/8)	15	14	13	12	11	11
#8 (1)	17	16	15	14	13	12
#9 (1-1/8)	19	18	17	15	15	14
#10 (1-1/4)	22	20	19	17	16	16
#11 (1-3/16)	24	22	21	19	18	17
#14 (1-3/4)	41	38	35	33	31	29
#18 (2-1/4)	51	50	46	43	41	39

SCHEDULE NOTES:

1. fy=60,000 PSI
2. EPOXY COATED REINFORCING MULTIPLY TABLULATEDE VALUE BY 1.2
3. FOR LIGHTWEIGHT CONCRETE MULTIPLY TABULATED VALUE BY 1.33
4. ASSUMES MINIMUM END COVER = 2"
5. ASSUMES MINIMUM SIDE COVER = 2-1/2
6. db = BAIR DIAMETER
7. Ldh = MINIMUM DEVLEOPMENT LENGTH OF HOOKED BAR PER SCHEDULE.

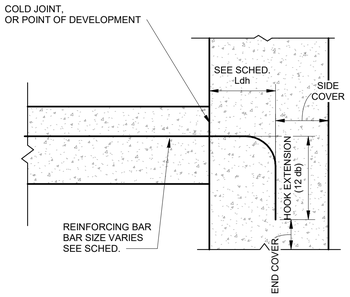

END HOOK SCHEDULE

BAR SIZE AND DIAMETER	INSIDE DIAMETER, D (in)	Lt, END HOOK (in) 90°	Lt, END HOOK (in) 180°	Lst, STIRUP HOOK END (lin) 90°	Lst, STIRUP HOOK END (lin) 135°	Lst, STIRUP HOOK END (lin) 180°
#3 (3/8")	1-1/2	6	4	5	4	4
#4 (1/2")	2	8	5	5	5	4
#5 (5/8")	2-1/2	10	5	6	6	5
#6 (3/4")	3	12	6	-	-	-
#7 (7/8")	3-1/2	14	7	-	-	-
#8 (8")	4	15	8	-	-	-

SCHEDULE NOTES:

1. LENGTHS IN TABLE ARE MINIMIM ALLOWABLE. LONGER LENGTHS FOR EASE OF CONSTUCTIBILTIY ARE PERMITTED
2. db= BAR DIAMETER (in)
3. Lext= MINIMUM LEG EXTENSION LENGTH (IN)
4. Lt= TOTAL HOOK LENGTH STANDARD REINFORCING BAR
5. Lst= TOTAL HOOK LENGTH FOR STIRRUP OR TIE BAR

STIRRUP HOOKED ENDS

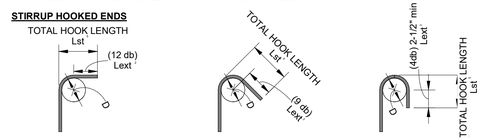

90 DEGREE STIRRUP HOOK | **135 DEGREE STIRRUP HOOK** | **180 DEGREE STIRRUP HOOK**

STANDARD HOOKED ENDS

90 DEGREE HOOK | **180 DEGREE TIE HOOK**

Rev.	Description	Date	Appr.

REV:

Designed by: Designer
Drawn by: Author
Reviewed by: Checker
Submitted by: Approver
Submitted: 20 MAY 2021
File:
Scale: 1" = 1'-0"
Project Number: Project Number

Residence for Justin & Aimee Naylor

3441 Hidden Meadow Circle
Morgan, UT 84050

CONC. AND FOUNDATION SCHEDULES

SHEET NUMBER
S-600

PLOT DATE: 5/20/2021 9:33:26 PM

WOOD DIAPHRAGM SHEATING AND NAILING SCHEDULE

MARK	SHEATHING REQUIREMENTS		NAILING REQUIREMENTS						Comments
	THICKNESS	SPAN RATING	NAIL SIZE	BOUNDARY NAILING	CONT. PANEL JOINTS	NON-CONT. PANEL JOINT	FIELD SPACING	BLOCKING REQ'D	
WD-1	15/32" OSB	24/16	10d	6" O.C.	NA	6" O.C.	12" O.C.	NO	
WD-2	3/4" T&G OSB	48/24	10d	6" O.C.	NA	6" O.C.	12" O.C.	NO	
WD-3	15/32" OSB	24/16	10d	6" O.C.	6" O.C.	6" O.C.	12" O.C.	YES	

1. DIAPHRAGM BOUNDARY EXIST AT ALL DIAPHRAGM/SHEARWALL INTERFACES AND AT ALL STRUCTURAL ELEMENTS THAT TRANSFER LATERAL FORCES INTO THOS WALLS
2. BLOCKING ALONG THIS JOINT DETERMINES WHETHER A DIAPHRAGM IS BLOCKED OR UNBLOCKED. UNBLOCKED DIAPGRAMGS DO NOT REQUIRED BLOCKING AT HIS JOINT.
3. SHEATHING SHALL BE ORIENTED WITH THE LONG DIRECTION (8FT. STRONG AXIS) PERPINDICULAR TO FRAMING, AND THE SHORT DIRECTION (4 FT. WEAK AXIS) PARALLEL TO FRAMING. UNLESS OTHERWISE NOTED. DO NOT ALTER SHEET ORIENTATION WITHOUT CONSULTING EOR.
4. NAILING SHALL CORRESPOND TO THE FOLLOWING:
   a. COMMON 10d 0.148" SHAFT ø x 3" LENGTH
   b. COMMON 8D 0.131" SHAFT ø x 2-1/2" LENGTH
   c. FOR ALTERNATE CONTACT EOR, USE OF NON-APPROVED NAILS MAY RESULT IN DEMOLITION OF WORK AND FRAMING TO BE REPLACED

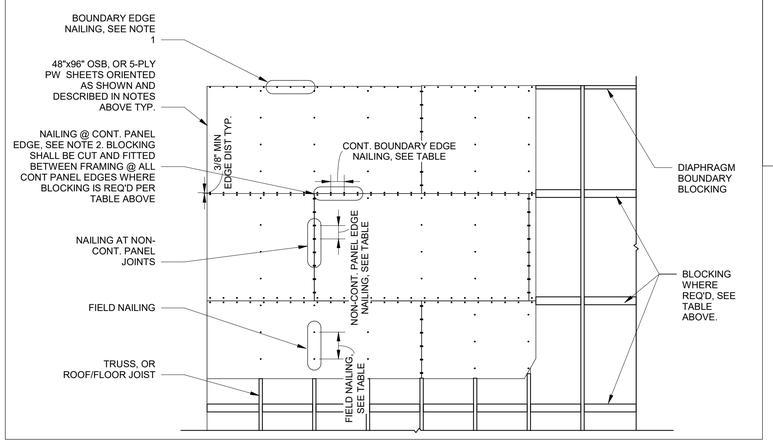

WOOD SHEAR WALL SCHEDULE

MARK	SHEATHING	NAILING		SILL PLATE CONNECTION	COMMENTS
		PANEL EDGES	INTERMEDIATE SUPPORTS		
SW-1	15/32" (1 SIDE)	8d @ 6" O.C.	8d @ 12" O.C.	2x W/ 5/8" φ A.B. @ 32" O.C.	CS16 FLOOR TO FLOOR STRAP UNO.
SW-2	15/*32" (1 SIDE)	8d @ 4" O.C.	8d @ 12" O.C.	2x W/ 5/8" φ A.B. @ 16" O.C.	CS16 FLOOR TO FLOOR STRAP UNO.
SW-3	15/*32" (1 SIDE)	8d @ 3" O.C.	8d @ 12" O.C.	2x W/ 5/8" φ A.B. @ 16" O.C.	CMSTC16 FLOOR TO FLOOR STRAP UNO.

NOTES:
1. USE EXPOSURE RATED 1 APA SHEATHING WITH A MINIMUM SPAN INDEX OF 24/16, UNO
2. ALL SHEATHING AND PANEL EDGES SHALL BE BLOCKED WITH A SINGLE COMMON BACK-UP MEMBER, TYP. (2x4 FLAT BLOCK MINIMUM)
3. WHEN BOTH FACES OF THE WALL ARE SHEATHED, STAGGER ALL JOINTS IN PLYWOOD/OSB, BOTH VERTICAL AND HORIZONTAL, ON ONE FACE OF THE WALL WITH THE JOINTS ON THE OTHER FACE OF THE WALL , TYP.
4. ALL NAILS SHALL BE DRIVEN FLUSH WITH THE SURFACE OF THE SHEATHING. DO NOT OVER-DRIVE OR UNDER-DRIVE THE NAILS. INADEQUATE NAILING WILL BE CORRECTED AT CONTRACTORS EXPENSE.
5. USE COMMON NAILS AT SPACING SHOWN. CONTACT THE EOR IF STAPLES ARE TO BE SUBSTITUTED IN PLACE OF NAILS. STAPLES REQUIRE ALL SHEATHING TO BE INSTALLED WITH FACE GRAIN PERPENDICULAR TO STUDS.
6. HORIZONTAL SPLICES IN SHEATHING SHALL NOT OCCUR AT HORIZONTAL JOINTS IN FRAMING. DO NOT PLACE JOINTS AT TOP EDGE OF TOP PLATE OR AT BOTTOM EDGE OF AN UPPER WALL SILL PLATE.
7. ANCHOR BOLTS SHALL INCLUDE A STEEL PLATE WASHER WITH THAT IS AT MINIMUM 0.229x3"x3" IN SIZE. THE WASHER PLATE SHALL BE INSTALLED SUCH THAT THE EDGE OF WASHER IS WITH IN 1/2" OF THE SILL PLATE(S) EDGE ON SIDE WITH SHEATHING. A SLOTTED WASHER MAY BE USED PROVIDED A STANDARD CUT WASHER IS PLACE BETWEEN THE NUT AND SLOTTED WASHER
8. ANCHOR BOLTS IN THE SILL PLATE SHALL BE PLACED SO AS NOT TO COINCIDE OR INTERFERE WITH THE LOCATION OF STUDS ABOVE. IF A STUD IS CUT OR NOTCHED AROUND A SILL PLATE BOLT ADD A NEW STUD NEXT TO THE CUT/NOTCHED STUD.
9. ANCHOR BOLTS SHALL HAVE A MINIMUM OF 7" EMBEDMENT INTO THE CONCRETE FOUNDATION WALL/ SLAB, UNO
10. SPECIFIED NAILS ARE COMMON AND SHALL CORRESPOND TO THE FOLLOWING DIAMETERS AND LENGTHS (10d - .0148"ø 3" LONG; 8d - 0.131"ø 2-1/2" LONG), OTHERWISE CONTACT EOR. USING NAILS OTHER THAN THOSE SPECIFIED MAY RESULT IN THE DEMOLITION OF WORK AND FRAMING TO BE REPLACED
11. ALL EXTERIOR WALLS NOT LABELED SHALL BE DESIGNATED MARK SW-1
12. FIRST SHEET OF SHEATHING SHALL START AND THE FOUNDATION SILL PLATE
13. SILL PLATES BETWEEN FLOORS AT SW-1 AND SW-2 SHALL BE 16d NAILS @ 6" O.C.. SW3 SILL PLATE CONNECTION BETWEEN FLOOR SHALL BE SIMPSON SDS25300 SCREWS @ 6" O.C.

HOLD DOWN AND/OR FLOOR TIE SCHEDULE

MARK	HD MODEL #	ANCHOR/ TIE BOLT	STUD DIMENSION (MIN)	HD TO STUD CONN.	COMMENTS
HD-1	LSTHD8	EMBED	(2) 2x STUDS G&N	FULLY NAILED	CAPACITY 1610# (16) 0.148"x3-1/4 NAILS
HD-2	STHD10	EMBED	(2) 2x STUDS G&N	FULLY NAILED	CAPACITY 2175# (20) 0.148"x3-1/4 NAILS
HD-3	STHD14	EMBED	(2) 2x STUDS G&N	FULLY NAILED	CAPACITY 3500# (24) 0.148"x3-1/4 NAILS)
HD-4	HDU2	SSTB24	(2) 2x STUDS G&N	(6) SDS25212 SCREWS	CAPACITY 3075#
HD-5	HDU4	SIMPSON SB5/8x24	(2) 2x STUDS G&N	(10) SDS25212 SCREWS	CAPACITY 4565#
HD-5	CS16	STRAP	(2) 2x STUDS G&N	FULLY NAILED	CAPACITY 1610#
HD-6	CSMSTC16	STRAP	(2) 2x STUDS G&N	FULLY NAILED	CAPACITY 3000#
HD-7	HDU4	SIMPSON PAB7 EMBED 16"	(3) 2x STUDS G&N	(20) SDS25212 SCREWS	CAPACITY 7087#

HD =HOLD DOWN OR STRAP
EMBED= MINIMUM EMDBEDMENT LENGTH OF BOLT INTO CONCRETE FOUNDATION WALL
G & N GLUED AND NAILED WITH 16d NAILS @ 8" O.C. STAGGERED 1" EACH SIDE OF CENTER LINE OF STUD
D & E DRILLED AND EPOXY ANCHOR BOLT, SEE GSN FOR APPROVED EPOXY AND COMMENTS FOR ADDITIONAL INFORMATION

NOTES:
1. STANDARD CUT FLAT WASHER REQUIRED UNDER NUT ON ANCHOR BOLT.
2. STUD SIZE REPRESENTS THE MINMIM SIZE AND NUMBER OF STUDS REQUIRED AT HOLD DOWN LOCATION. HOLD DOWN SHALL CONNECT TO BUILT UP STUD WITH SCREWS OR NAILS AS INDICATED BY MANUFACTURERS INSTALLATION PROCEDURE.
3. 1-1/2" SPACE REQUIRED BETWEEN THE BOTTOM OF THE HOLD DOWN AND WALL SILL PLATE. TYPICAL ALL HOLD DOWNS.
4. BUILT-UP STUDS ATTACHED TO HOLD DOWN SHALL RECIEVE PANEL EDGE NAILING AS INDICATED ON THE SHEAR WALL SCHEDULE OR AT MINIMUM OF 4" O.C.; FOLLOW MORE STRINGENT REQUIREMENT.
5. INSTALL HOLD DOWN PER THE MANUFACTURERS MOST CURRENT AND UP TO DATE RECOMMENDATIONS, UNO.

UNBALANCED SNOW LOADING SCHEDULE

TRUSS DESIGNATION	L	X	SB (PSF)	SW (PSF)	SL (PSF)	UB SNOW COMMENTS
TR-1	SEE PLAN	7.34'	38.5	11.6	67.6	
TR-2	SEE PLAN	6.84	38.5	11.6	67.6	
TR-3	SEE PLAN	7.34	38.5	11.6	67.6	
TR-4	SEE PLAN	7.34	38.5	11.6	67.6	
TR-5	SEE PLAN	6.84	38.5	11.6	67.6	
TR-5	SEE PLAN	6.84	38.5	11.6	67.6	TIMBER FRAME TRUSS

L=LENGTH
SB= BALANCED SNOW LOAD
SW= WINDWARD SNOW LOAD
SL= LEWWARD SNOW LOAD
X- LEEWARD WIND LENGTH

WEB CONFIGURATION SHALL BE DETERMINED BY THE TRUSS DESIGINER

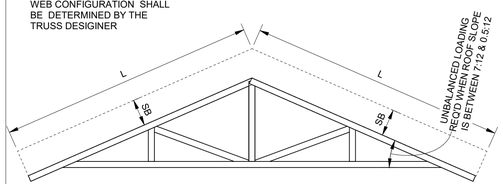

CASE 1 BALANCED SNOW LOADING

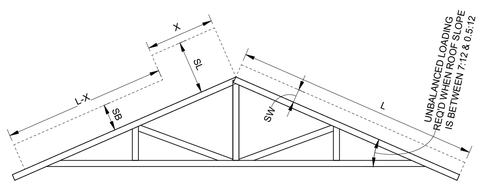

CASE 2 UNBALANCED SNOW LOADING

STANDARD OR SCISSOR TRUSS LOADING

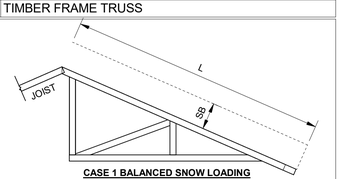

CASE 1 BALANCED SNOW LOADING

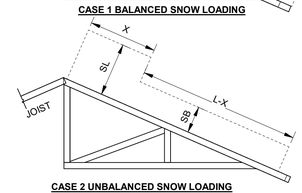

CASE 2 UNBALANCED SNOW LOADING

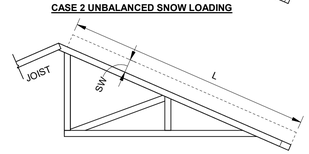

CASE 3 UNBALANCED SNOW LOADING

JACK TRUSS LOADING (WHERE OCCURS)

SNOW DRIFT DIAGRAM

CASE	X (PSF)	L (FT)
A	56.6	10.7
B	28.8	5.44
C	40.8	13
D	66.5	12.57

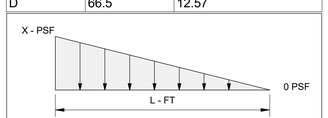

DRIFT DIAGRAM

1. SEE PLAN FOR DRIFT LOCATION
2. SNOW DRIFT IS APPLIED IN CONJUNCTION WITH BALANCED AND UNBALANCED SNOW LOADING

PROFESSIONAL ENGINEER LICENSED No. 9324712-2202 Timothy Peay STATE OF UTAH 20 MAY 2021

Rev.	Description	Date	Appr.

REV:

Designed by: Designer
Drawn by: Author
Reviewed by: Checker
Submitted by: Approver
Submitted: 20 MAY 2021
File:
Scale: As indicated
Project Number: Project Number

Residence for Justin & Aimee Naylor

3441 Hidden Meadow Circle
Morgan, UT 84050

WOOD SCHEDULES

SHEET NUMBER
S-601

PLOT DATE: 5/20/2021 9:33:28 PM

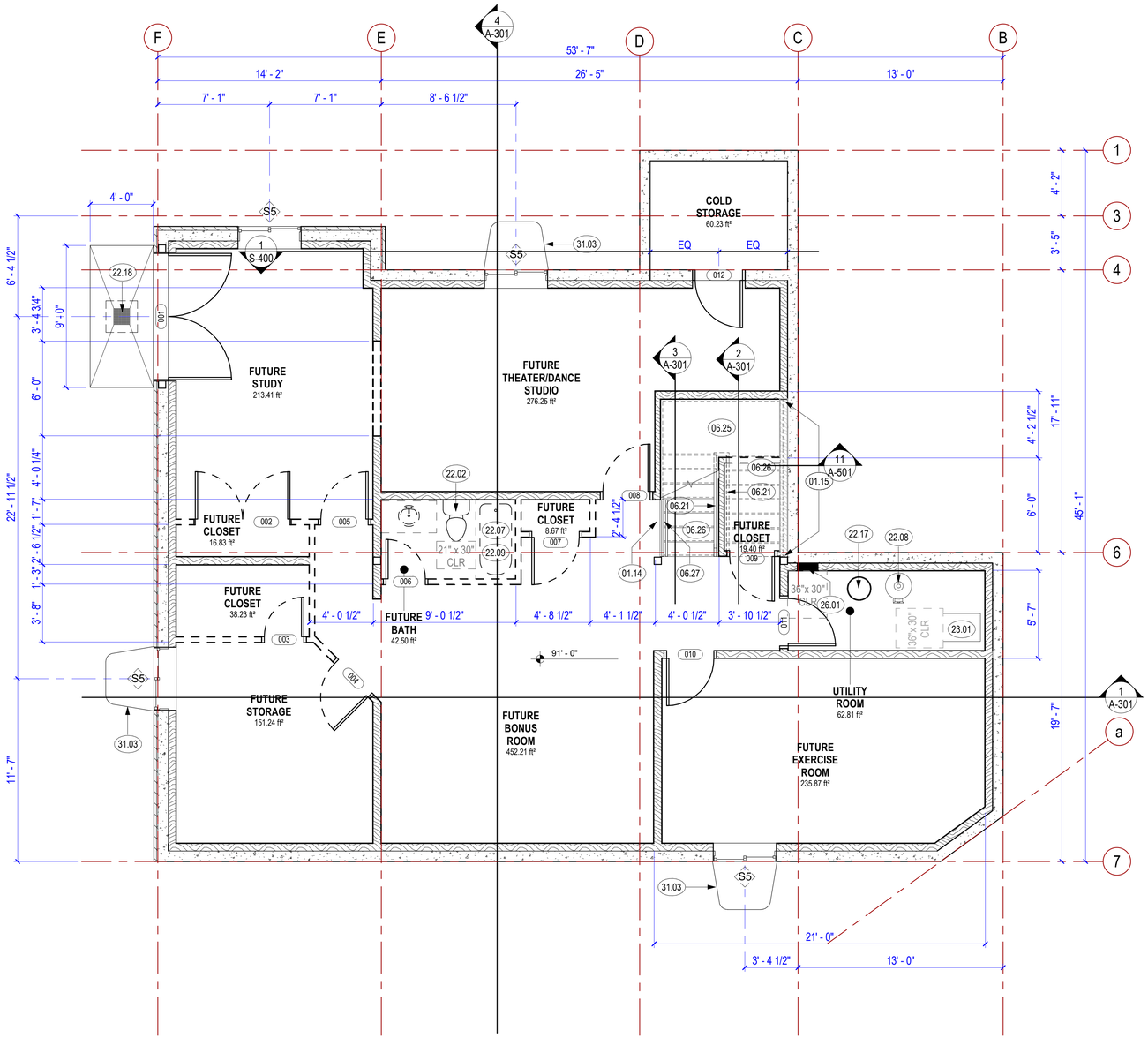

1 BASEMENT FLOOR PLAN
1/4" = 1'-0"

KEYED NOTES

01.14 ALTERNATIVELY, EXTEND WALL TO COLUMN IN PLACE OF GUARDRAIL

01.15 WALL BELOW STAIR

06.21 HANDRAIL SIZE TO BE 1 1/4" TO 2 5/8", HANDRAILS SHALL TERMINATE TO WALLS OR NEWEL POSTS. MAX 4" SPACING BETWEEN BALUSTERS. HANDRAIL IS TO BE PLACED 34" TO 38" ABOVE THE NOSE OF THE TREADS VERTICALLY TO THE TOP RAIL. THEY SHALL BE CONTINUOUS THE FULL LENGTH OF THE STAIRS. THE HANDGRIP PORTION SHALL BE NOT LESS THAN 1 1/4" NOR MORE THAN 2" IN CROSS-SECTIONAL DIMENSION. HANDRAILS PROJECTING FROM A WALL SHALL HAVE A SPACE OF NOT LESS THAN 1 1/2" BETWEEN THE WALL AND THE HANDRAIL

06.25 STAIRS ARE TO BE CONSTRUCTED WITH (3) 2x12 (OR EQUIVALENT) STAIR STRINGERS, TYP. ALL TREAD RUN OR RISER WITHIN FLIGHT OF STAIRS SHALL NOT EXCEED THE SMALLEST BY MORE THAN 3/8". MAXIMUM RISE 7" MINIMUM TREAD 9". STAIR RISERS SHALL BE SOLID

06.26 STAIR NOSING TO BE 3/4" MIN. TO 1 1/4" MAX

06.27 36" HIGH GUARDS SHALL BE PROVIDED ON PORCHES, BALCONIES AND RAISED FLOOR SURFACES LOCATED MORE THAN 30" ABOVE THE FLOOR OR GRADE BELOW. OPEN SIDE OF STAIRS WITH A TOTAL RISE OF 30" ABOVE THE FLOOR OR GRADE BELOW SHALL HAVE GUARDS AT LEAST 34" HIGH. GUARDS WILL HAVE AN ORNAMENTAL PATTERN SUCH THAT A SPHERE 4" IN DIAMETER CANNOT PASS THROUGH. THE TRIANGULAR SPACE CREATED BY THE STAIR AND A BOTTOM RAIL MAY BE CONSTRUCTED SO A 6" SPHERE WILL NOT PASS THROUGH. (R312)

22.02 TOILET - 1.6 GALLONS PER FLUSH MAX

22.07 OVERHEAD LOW FLOW RAIN SHOWER HEAD - 2.5 GALLONS PER MINUTE MAX

22.08 NEW 50-GALLON WATER HEATER, WITH EXPANSION TANK, METAL PAN SHALL BE UNDER THE WATER HEATER

22.09 TUBS AND SHOWERS WITH TILED WALLS REQUIRE A PORTLAND CEMENT APPLICATION, FIRBERED-CEMENT OR GLASS MAT GYPSUM BACKER; GREEN BOARD IS NO LONGER ALLOWED. SHOWERS SHALL BE FINISHED TO A HEIGHT OF NOT LESS THAN 72" ABOVE THE FLOOR, MATERIALS SHALL BE NON-ABSORBENT

22.17 SUMP PUMP

22.18 2' x 2' x 2' DURA-CRETE, OR EQUAL, PRE-CAST CONCRETE CATCH BASIN WITH CAST IRON OR GALVANIZED STEEL GRATE, CATCH BASIN SHALL DRAIN INTO SOIL BELOW. SLOPE CONCRETE SLAB DOWN TO CATCH BASIN AT 1/4" PER FOOT. INSTALL CATCH BASIN ON TOP OF 6" OF GRAVEL. DRILL 5 EVENLY SPACED 1" DIAMETER HOLES IN THE THIN WALLS OF ALL FOUR SIDES AND 8 EVENLY SPACED 1" DIAMETER HOLES IN THE THIN WALL OF THE BOTTOM OF THE CATCH BASIN. INSTALL FILTER FABRIC ON EXTERIOR SIDES AND BOTTOM OF CATCH BASIN.

23.01 NEW, VARIABLE SPEED, 92% PLUS, FORCED AIR UNIT WITH HUMIDIFIER AND RECIRCULATION UNIT

26.01 NEW RECESSED ELECTRICAL PANEL LOCATION, PROVIDE A UFER GROUND. ELECTRICAL PANELS PENETRATING THE GARAGE SIDE GYPSUM BOARD MEMBRANE SHALL BE WRAPPED WITH 5/8" TYPE 'X' GYPSUM BOARD ON THE TOP, BOTTOM, SIDES AND BACK.

31.03 WINDOW WELL TO COMPLY WITH PER IRC 310.2.3

GRAPHIC SCALE 0' 1' 2' 4' 8' 16'
1/4" = 1'-0"

Rev.	Description	Date	Appr.

REV:

Designed by: Designer
Drawn by: Author
Reviewed by: Checker
Submitted by: Approver
Submitted: 20 MAY 2021
File:
Scale: 1/4" = 1'-0"
Project Number: Project Number

Residence for Justin & Aimee Naylor

3441 Hidden Meadow Circle
Morgan, UT 84050

BASEMENT FLOOR PLAN

SHEET NUMBER
A-100

PLOT DATE: 5/20/2021 9:31:53 PM

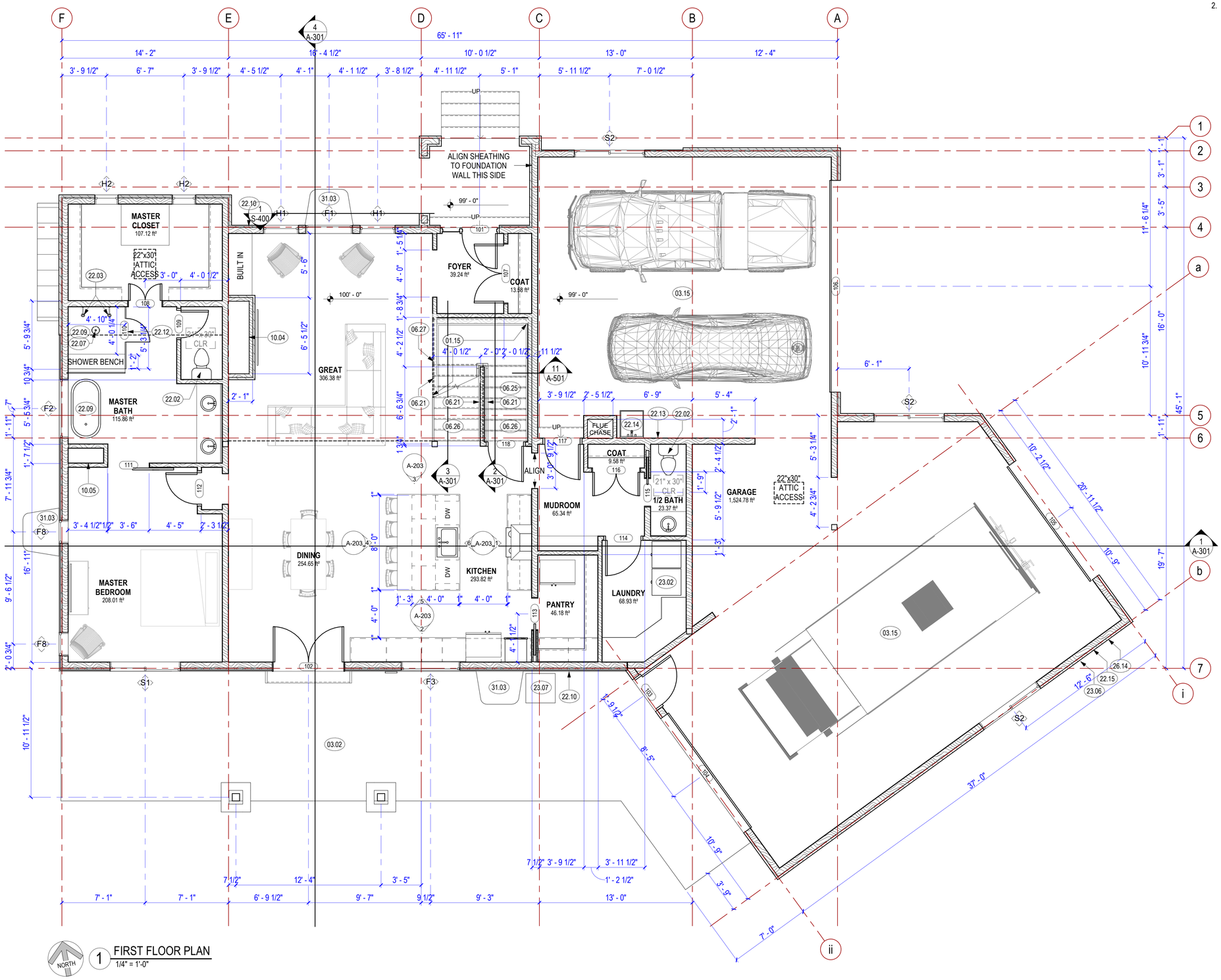

1 FIRST FLOOR PLAN
1/4" = 1'-0"

FLOOR PLAN GENERAL NOTES

1. ALL DIMENSIONS ARE TO FACE OF STUD OR FACE OF GRID UNLESS NOTED OTHERWISE.
2. ALL FLOOR FINISH CHANGES OCCUR AT CENTERLINE OF DOOR IN CLOSED POSITION, UNLESS NOTED OTHERWISE.

KEYED NOTES

01.15 WALL BELOW STAIR

03.02 4" CONCRETE FLOOR SLAB (UNHEATED SPACES) OVER A 4-INCH-THICK (102 MM) BASE COURSE CONSISTING OF CLEAN GRADED SAND, GRAVEL, CRUSHED STONE OR CRUSHED BLAST-FURNACE SLAG PASSING A 2-INCH (51 MM) SIEVE SHALL BE PLACED ON THE PREPARED SUBGRADE WHEN THE SLAB IS BELOW GRADE. (R506.2.2 BASE)

03.15 SLOPE FLOOR TO CENTRALIZED FLOOR DRAIN

06.21 HANDRAIL SIZE TO BE 1 1/4" TO 2 5/8", HANDRAILS SHALL TERMINATE TO WALLS OR NEWEL POSTS. MAX 4" SPACING BETWEEN BALUSTERS. HANDRAIL IS TO BE PLACED 34" TO 38" ABOVE THE NOSE OF THE TREADS VERTICALLY TO THE TOP RAIL. THEY SHALL BE CONTINUOUS THE FULL LENGTH OF THE STAIRS. THE HANDGRIP PORTION SHALL BE NOT LESS THAN 1 1/4" NOR MORE THAN 2" IN CROSS-SECTIONAL DIMENSION. HANDRAILS PROJECTING FROM A WALL SHALL HAVE A SPACE OF NOT LESS THAN 1 1/2" BETWEEN THE WALL AND THE HANDRAIL

06.25 STAIRS ARE TO BE CONSTRUCTED WITH (3) 2x12 (OR EQUIVALENT) STAIR STRINGERS, TYP. ALL TREAD RUN OR RISER WITHIN FLIGHT OF STAIRS SHALL NOT EXCEED THE SMALLEST BY MORE THAN 3/8". MAXIMUM RISE 7" MINIMUM TREAD 9". STAIR RISERS SHALL BE SOLID

06.26 STAIR NOSING TO BE 3/4" MIN. TO 1 1/4" MAX

06.27 36" HIGH GUARDS SHALL BE PROVIDED ON PORCHES, BALCONIES AND RAISED FLOOR SURFACES LOCATED MORE THAN 30" ABOVE THE FLOOR OR GRADE BELOW. OPEN SIDE OF STAIRS WITH A TOTAL RISE OF 30" ABOVE THE FLOOR OR GRADE BELOW SHALL HAVE GUARDS AT LEAST 34" HIGH. GUARDS WILL HAVE AN ORNAMENTAL PATTERN SUCH THAT A SPHERE 4" IN DIAMETER CANNOT PASS THROUGH. THE TRIANGULAR SPACE CREATED BY THE STAIR AND A BOTTOM RAIL MAY BE CONSTRUCTED SO A 6" SPHERE WILL NOT PASS THROUGH. (R312)

10.04 FIREPLACE, MARQUIS 48" BENTLEY

10.05 THREE SIDED FIREPLACE, HEATILATOR 36" PENINSULA

22.02 TOILET - 1.6 GALLONS PER FLUSH MAX

22.03 LOW FLOW SHOWER HEAD - 2.5 GALLONS PER MINUTE MAX

22.07 OVERHEAD LOW FLOW RAIN SHOWER HEAD - 2.5 GALLONS PER MINUTE MAX

22.09 TUBS AND SHOWERS WITH TILED WALLS REQUIRE A PORTLAND CEMENT APPLICATION, FIRBERED-CEMENT OR GLASS MAT GYPSUM BACKER; GREEN BOARD IS NO LONGER ALLOWED. SHOWERS SHALL BE FINISHED TO A HEIGHT OF NOT LESS THAN 72" ABOVE THE FLOOR, MATERIALS SHALL BE NON-ABSORBENT

22.10 NON-FREEZE TYPE BACKFLOW PREVENTER HOSE BIB, ON HIGH PRESSURE WATER LINE

22.12 CURBLESS SHOWER ENTRY

22.13 TWO (2) NON-FREEZE TYPE BACKFLOW PREVENTER HOSE BIBBS ON HIGH PRESSURE WATER LINES, (1) HOT AND (1) COLD

22.14 UTILITY SINK

22.15 NEW WATER METER

23.02 VENT DRYER TO THE OUTSIDE, DUCTS SHALL BE CONSTRUCTED OF MINIMUM 0.016 INCH THICK RIGID METAL, HAVING SMOOTH INTERIOR SURFACES WITH JOINTS RUNNING IN DIRECTION OF AIR FLOW. MAXIMUM LENGTH OF EXHAUST DUCT SHALL NOT EXCEED 25 FEET (THE MAXIMUM LENGTH OF DUCT SHALL BE REDUCED 2.5 FEET FOR EACH 45 DEGREE BEND AND 5 FEET FOR EACH 90 DEGREE BEND. CLOTHES DRYER EXHAUST SHALL COMPLY WITH SECTION (M1502)

23.06 NEW GAS SERVICE AND METER

23.07 LOCATION OF EXTERIOR AIR CONDITIONING UNIT

26.14 NEW ELECTRICAL SERVICE AND METER

31.03 WINDOW WELL TO COMPLY WITH PER IRC 310.2.3

GRAPHIC SCALE 0' 1' 2' 4' 8' 16'
1/4" = 1'-0"

Rev.	Description	Date	Appr.

REV:

Submitted: 20 MAY 2021
File:
Scale: As indicated
Project Number: Project Number

Designed by: RME
Drawn by:
Reviewed by: RME
Submitted by:

Residence for Justin & Aimee Naylor

3441 Hidden Meadow Circle
Morgan, UT 84050

FIRST FLOOR PLAN

SHEET NUMBER
A-101

PLOT DATE: 5/20/2021 9:32:08 PM

FLOOR PLAN GENERAL NOTES

1. ALL DIMENSIONS ARE TO FACE OF STUD OR FACE OF GRID UNLESS NOTED OTHERWISE.
2. ALL FLOOR FINISH CHANGES OCCUR AT CENTERLINE OF DOOR IN CLOSED POSITION, UNLESS NOTED OTHERWISE.

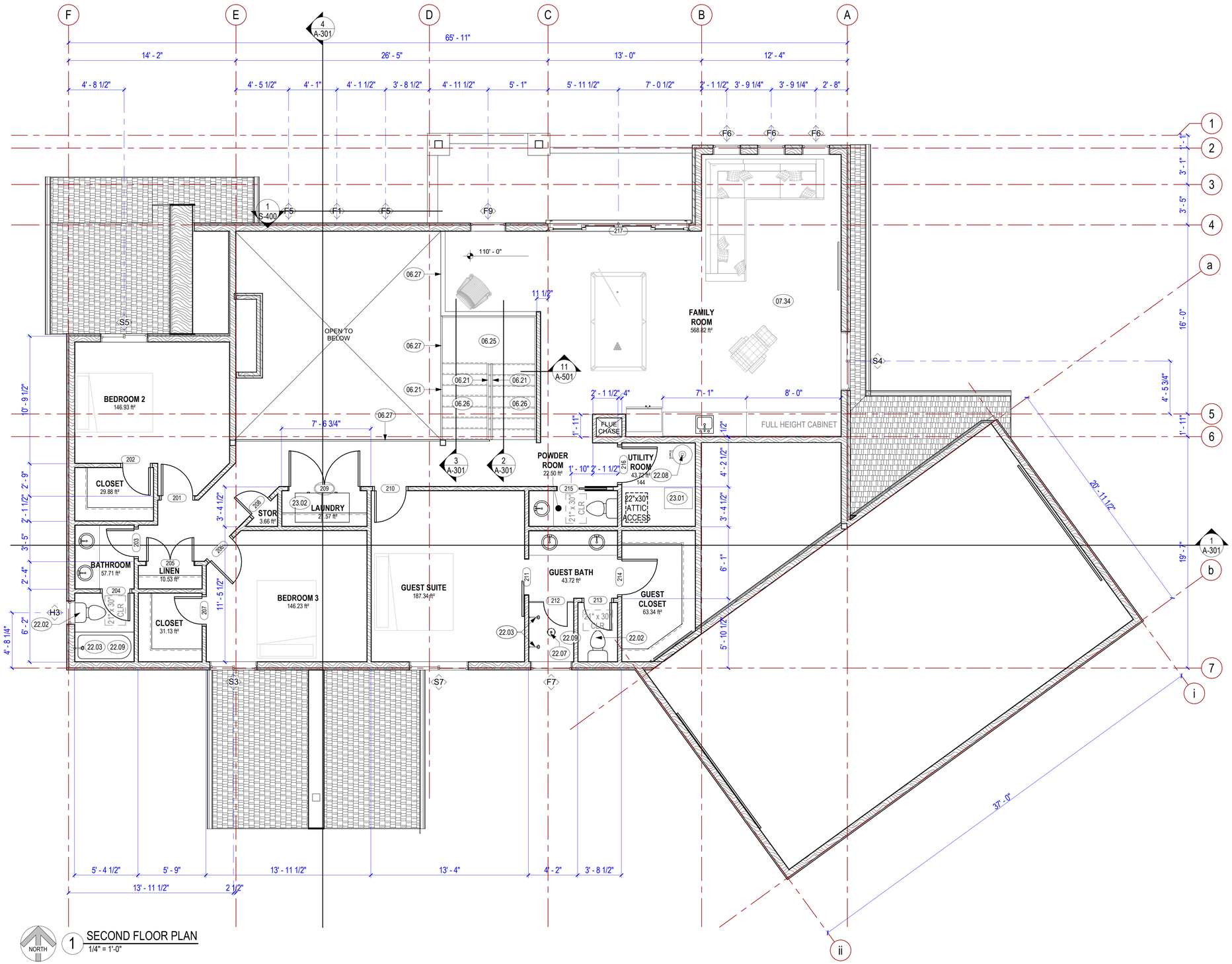

KEYED NOTES

06.21 HANDRAIL SIZE TO BE 1 1/4" TO 2 5/8", HANDRAILS SHALL TERMINATE TO WALLS OR NEWEL POSTS. MAX 4" SPACING BETWEEN BALUSTERS. HANDRAIL IS TO BE PLACED 34" TO 38" ABOVE THE NOSE OF THE TREADS VERTICALLY TO THE TOP RAIL. THEY SHALL BE CONTINUOUS THE FULL LENGTH OF THE STAIRS. THE HANDGRIP PORTION SHALL BE NOT LESS THAN 1 1/4" NOR MORE THAN 2" IN CROSS-SECTIONAL DIMENSION. HANDRAILS PROJECTING FROM A WALL SHALL HAVE A SPACE OF NOT LESS THAN 1 1/2" BETWEEN THE WALL AND THE HANDRAIL

06.25 STAIRS ARE TO BE CONSTRUCTED WITH (3) 2x12 (OR EQUIVALENT) STAIR STRINGERS, TYP. ALL TREAD RUN OR RISER WITHIN FLIGHT OF STAIRS SHALL NOT EXCEED THE SMALLEST BY MORE THAN 3/8". MAXIMUM RISE 7" MINIMUM TREAD 9". STAIR RISERS SHALL BE SOLID

06.26 STAIR NOSING TO BE 3/4" MIN. TO 1 1/4" MAX

06.27 36" HIGH GUARDS SHALL BE PROVIDED ON PORCHES, BALCONIES AND RAISED FLOOR SURFACES LOCATED MORE THAN 30" ABOVE THE FLOOR OR GRADE BELOW. OPEN SIDE OF STAIRS WITH A TOTAL RISE OF 30" ABOVE THE FLOOR OR GRADE BELOW SHALL HAVE GUARDS AT LEAST 34" HIGH. GUARDS WILL HAVE AN ORNAMENTAL PATTERN SUCH THAT A SPHERE 4" IN DIAMETER CANNOT PASS THROUGH. THE TRIANGULAR SPACE CREATED BY THE STAIR AND A BOTTOM RAIL MAY BE CONSTRUCTED SO A 6" SPHERE WILL NOT PASS THROUGH. (R312)

07.34 INSULATE FLOORS OVER UNHEATED SPACES WITH R-30 BATT INSULATION

22.02 TOILET - 1.6 GALLONS PER FLUSH MAX

22.03 LOW FLOW SHOWER HEAD - 2.5 GALLONS PER MINUTE MAX

22.07 OVERHEAD LOW FLOW RAIN SHOWER HEAD - 2.5 GALLONS PER MINUTE MAX

22.08 NEW 50-GALLON WATER HEATER, WITH EXPANSION TANK, METAL PAN SHALL BE UNDER THE WATER HEATER

22.09 TUBS AND SHOWERS WITH TILED WALLS REQUIRE A PORTLAND CEMENT APPLICATION, FIRBERED-CEMENT OR GLASS MAT GYPSUM BACKER; GREEN BOARD IS NO LONGER ALLOWED. SHOWERS SHALL BE FINISHED TO A HEIGHT OF NOT LESS THAN 72" ABOVE THE FLOOR, MATERIALS SHALL BE NON-ABSORBENT

23.01 NEW, VARIABLE SPEED, 92% PLUS, FORCED AIR UNIT WITH HUMIDIFIER AND RECIRCULATION UNIT

23.02 VENT DRYER TO THE OUTSIDE, DUCTS SHALL BE CONSTRUCTED OF MINIMUM 0.016 INCH THICK RIGID METAL, HAVING SMOOTH INTERIOR SURFACES WITH JOINTS RUNNING IN DIRECTION OF AIR FLOW. MAXIMUM LENGTH OF EXHAUST DUCT SHALL NOT EXCEED 25 FEET (THE MAXIMUM LENGTH OF DUCT SHALL BE REDUCED 2.5 FEET FOR EACH 45 DEGREE BEND AND 5 FEET FOR EACH 90 DEGREE BEND. CLOTHES DRYER EXHAUST SHALL COMPLY WITH SECTION (M1502)

1 SECOND FLOOR PLAN
1/4" = 1'-0"

NORTH

GRAPHIC SCALE 1/4" = 1'-0"

Rev.	Description	Date	Appr.

REV:

Designed by: Designer
Drawn by: Author
Reviewed by: Checker
Submitted by: Approver
Submitted: 20 MAY 2021
File:
Scale: As indicated
Project Number: Project Number

Residence for Justin & Aimee Naylor

3441 Hidden Meadow Circle
Morgan, UT 84050

SECOND FLOOR PLAN

SHEET NUMBER
A-102

PLOT DATE: 5/20/2021 9:32:12 PM

ROOF PLAN GENERAL NOTES

1. VALLEY FLASHING SHALL BE 28 GAUGE (MINIMUM) CORROSION-RESOSTANT SHEET METAL EXTENDING A MINIMUM OF 11" IN BOTH DIRECTIONS FROM CENTERLINE OF VALLEY
2. ALL PLUMBING VENTS THROUGH THE ROOF TO BE A MINIMUM 3" PIPE
3. INSTALL W.R. GRACE BITUMINOUS "ICE AND WATER SHIELD" CONTINUOUS FROM EAVE TO 30" (MEASURED HORIZONTALLY) BEYOND WARM SIDE OF EXTERIOR WALLS AND AT VALLEYS
4. PROVIDE A 1" AIRSPACE AT ENCLOSED ATTICS AND RAFTERS TO CREATE CROSS VENTILATION WITH A NET FREE VENTILATED AREA NOT LESS THAN 1/150 BETWEEN LOW VENTS (SOFFIT VENTS ARE NOT ALLOWED PER THE 2006 UTAH WILDLAND URBAN INTERFACE CODE) AND RIDGE VENTS. BLOCKING AND BRIDGING SHALL BE ARRANGED SO AS NOT TO INTERFERE WITH THE MOVEMENT OF AIR. VENTILATORS SHALL BE INSTALLED IN ACCORDANCE WITH MANUFACTURER'S INSTALLATION INSTRUCTIONS.

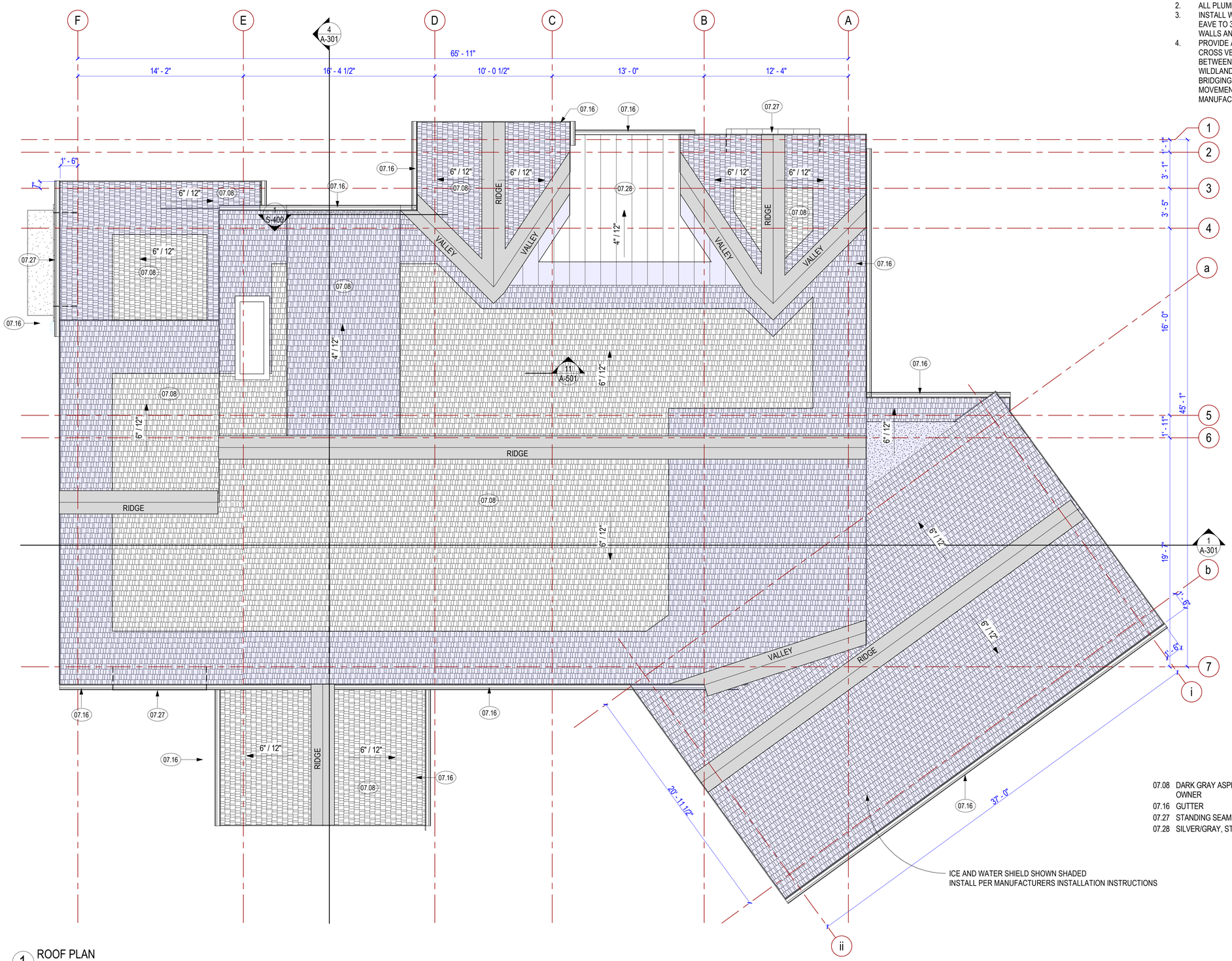

KEYED NOTES

07.08 DARK GRAY ASPHALT SHINGLES OVER 30lb ROOFING FELTS, COLOR TO BE SELECTED BY OWNER
07.16 GUTTER
07.27 STANDING SEAM ROOF AWNING, SEE DETAIL
07.28 SILVER/GRAY, STANDING SEAM METAL ROOFING OVER 30lb ROOFING FELTS OVER

ICE AND WATER SHIELD SHOWN SHADED
INSTALL PER MANUFACTURERS INSTALLATION INSTRUCTIONS

1 ROOF PLAN
1/4" = 1'-0"

GRAPHIC SCALE 0' 1' 2' 4' 8' 16' 1/4" = 1'-0"

Rev.	Description	Date	Appr.

Designed by: Designer
Drawn by: Author
Reviewed by: Checker
Submitted by: Approver
Submitted: 20 MAY 2021
File:
Scale: As indicated
Project Number: Project Number
REV:

Residence for Justin & Aimee Naylor

3441 Hidden Meadow Circle
Morgan, UT 84050

ROOF PLAN

SHEET NUMBER
A-103

PLOT DATE: 5/20/2021 9:32:14 PM

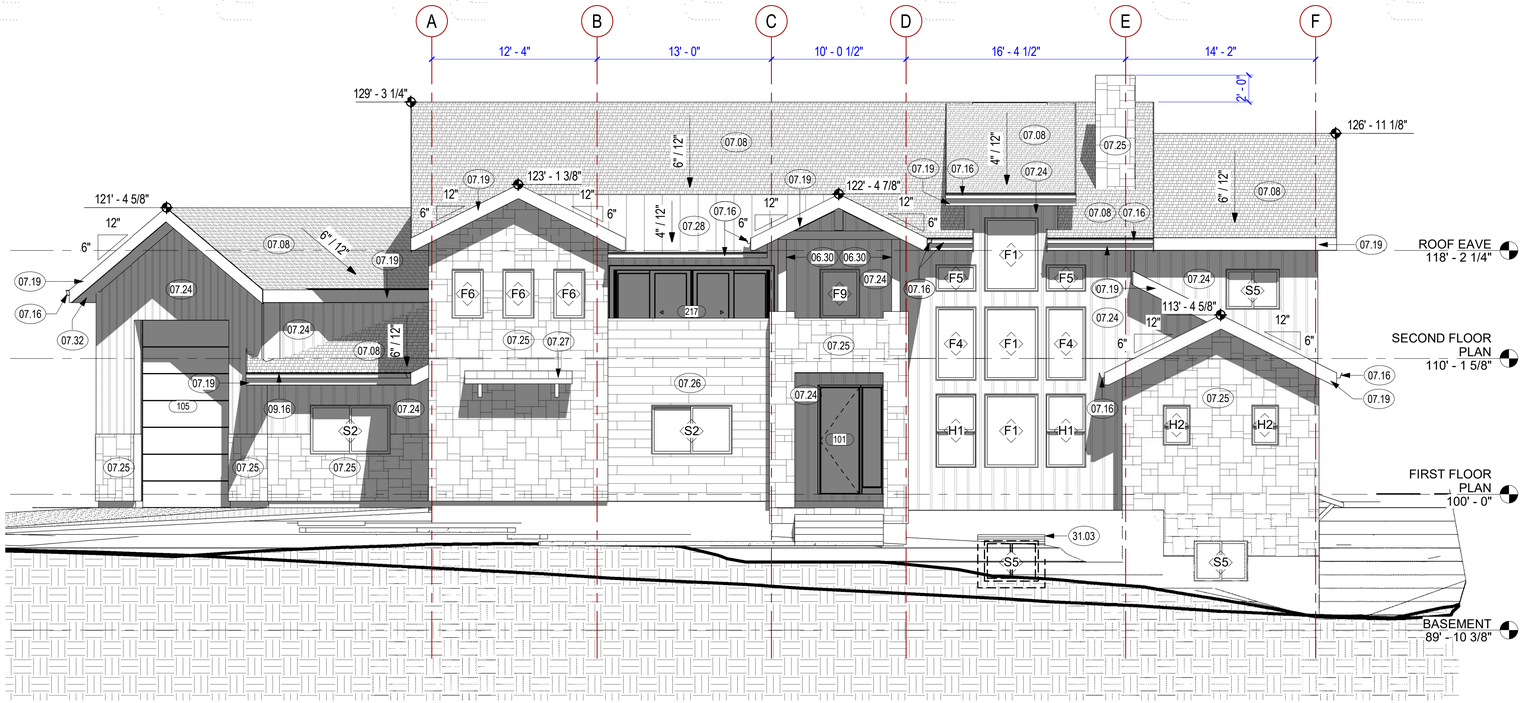

1 NORTH ELEVATION
3/16" = 1'-0"

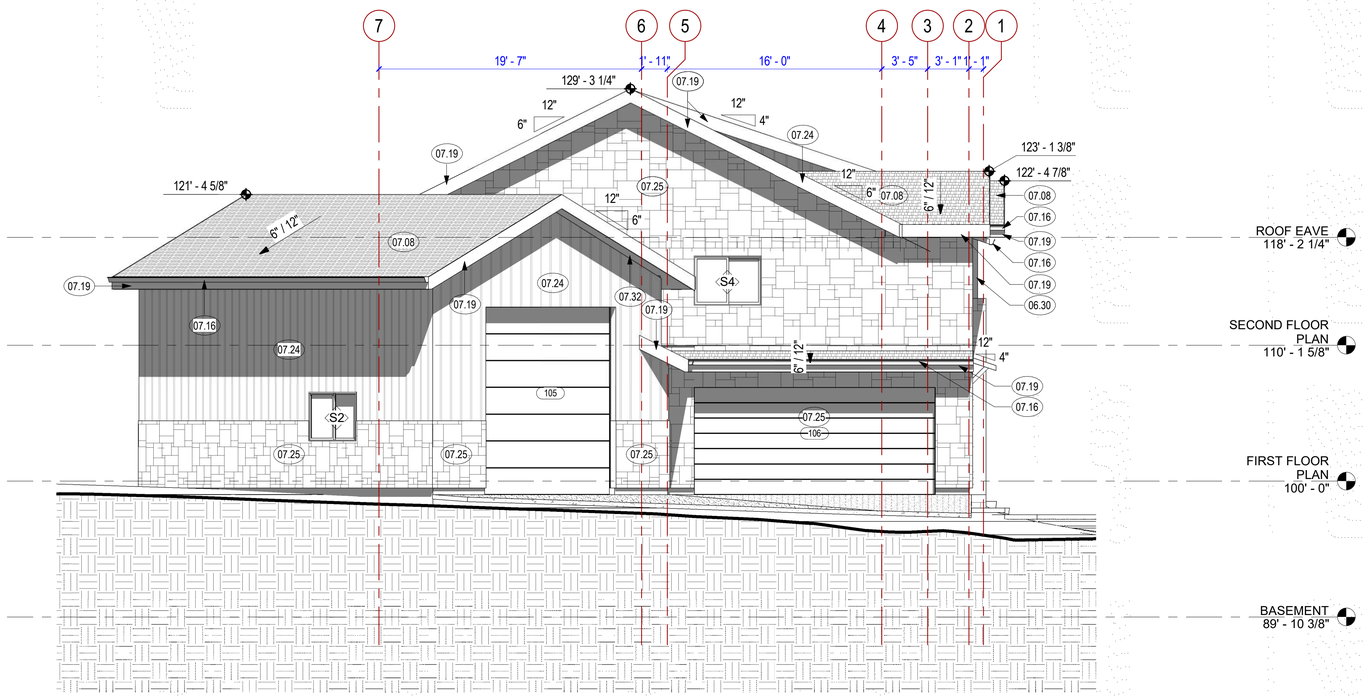

2 EAST ELEVATION
3/16" = 1'-0"

KEYED NOTES

06.30 COLUMN, SEE STRUCTURAL
07.08 DARK GRAY ASPHALT SHINGLES OVER 30lb ROOFING FELTS, COLOR TO BE SELECTED BY OWNER
07.16 GUTTER
07.19 PAINTED WOOD FASCIA, COLOR BLACK
07.24 NAVY BLUE BOARD AND BATTEN VERTICAL SIDING OVER "TYVEK" OR EQUIVALENT, COLOR TO BE SELECTED Y OWNER
07.25 2" STONE VENEER, HARRISTONE, FLINT HILLS LUEDERS, OVER "TYVEK" OR EQUIVALENT
07.26 3/4" STONE VENEER, CRAFT® BOARD FROM® SYCAMORE, OVER "TYVEK" OR EQUIVALENT
07.27 STANDING SEAM ROOF AWNING, SEE DETAIL
07.28 SILVER/GRAY, STANDING SEAM METAL ROOFING OVER 30lb ROOFING FELTS OVER
07.32 SOLID ALUMINUM SOFFIT
09.16 ENCLOSED SPACE UNDER STAIRS SHALL HAVE THE WALLS AND SOFFIT PROTECTED ON THE ENCLOSED SIDE WITH 1/2" GYPSUM BOARD (IRC R302.7)
31.03 WINDOW WELL TO COMPLY WITH PER IRC 310.2.3

64" 2' 0" 2' 4' 8' 16'
GRAPHIC SCALE 3/16" = 1'-0"

Rev.	Description	Date	Appr.

REV:
Submitted: 20 MAY 2021
File:
Scale: 3/16" = 1'-0"
Project Number: Project Number
Designed by: RME
Drawn by:
Reviewed by: RME
Submitted by:

Residence for Justin & Aimee Naylor

3441 Hidden Meadow Circle
Morgan, UT 84050

EXTERIOR ELEVATIONS

SHEET NUMBER
A-201

PLOT DATE: 5/20/2021 9:32:19 PM

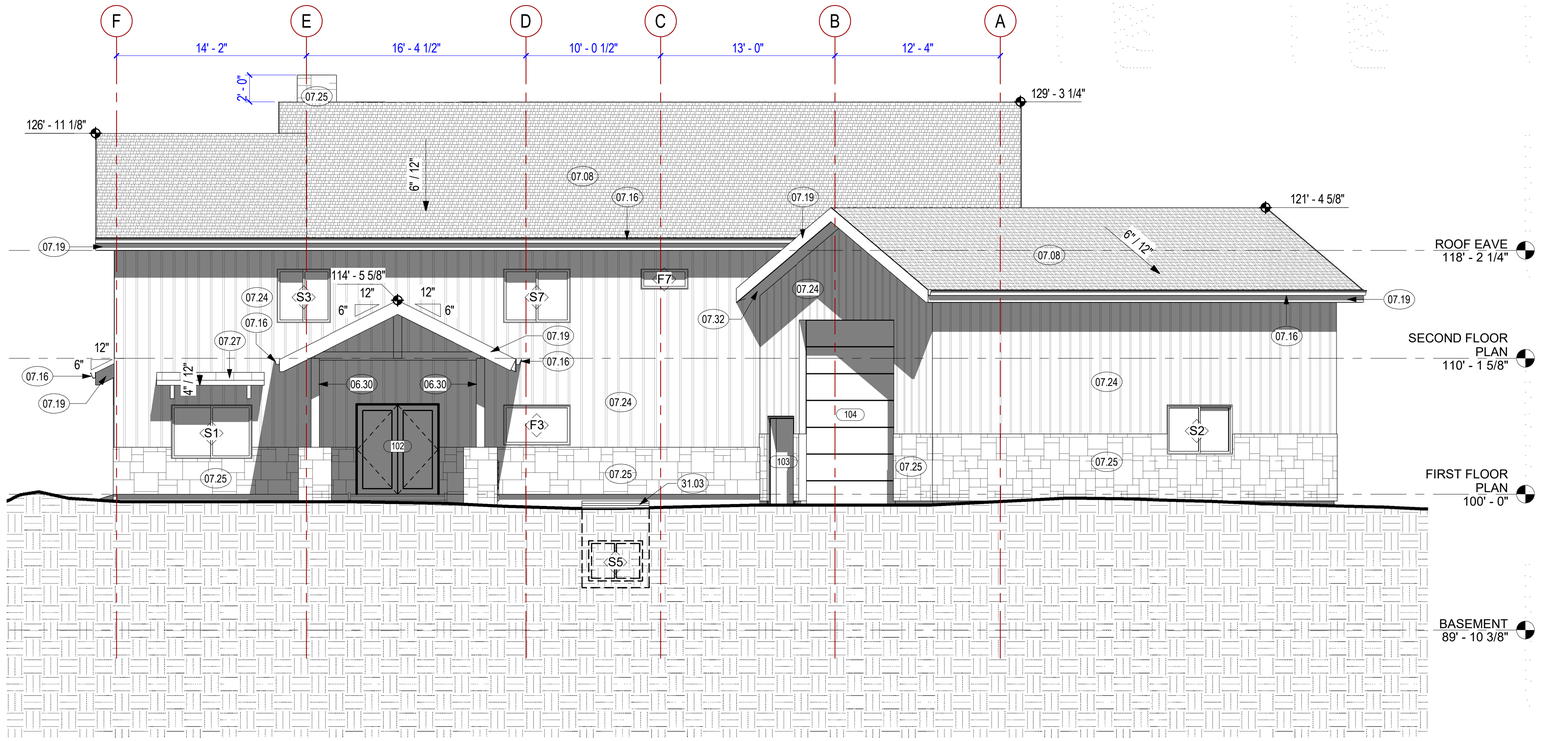

1 SOUTH ELEVATION
3/16" = 1'-0"

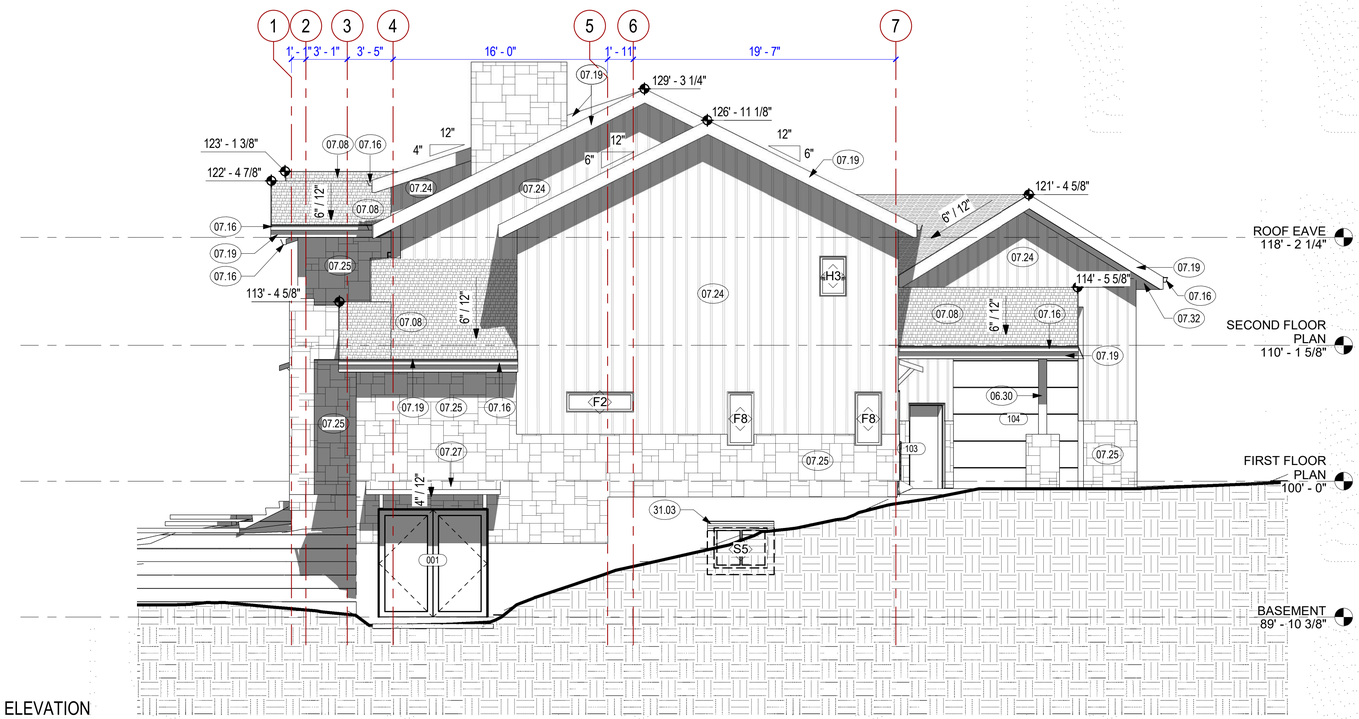

2 WEST ELEVATION
3/16" = 1'-0"

KEYED NOTES

06.30	COLUMN, SEE STRUCTURAL
07.08	DARK GRAY ASPHALT SHINGLES OVER 30lb ROOFING FELTS, COLOR TO BE SELECTED BY OWNER
07.16	GUTTER
07.19	PAINTED WOOD FASCIA, COLOR BLACK
07.24	NAVY BLUE BOARD AND BATTEN VERTICAL SIDING OVER "TYVEK" OR EQUIVALENT, COLOR TO BE SELECTED Y OWNER
07.25	2" STONE VENEER, HARRISTONE, FLINT HILLS LUEDERS, OVER "TYVEK" OR EQUIVALENT
07.27	STANDING SEAM ROOF AWNING, SEE DETAIL
07.32	SOLID ALUMINUM SOFFIT
31.03	WINDOW WELL TO COMPLY WITH PER IRC 310.2.3

64" 2' 0" 2' 4' 8' 16'
GRAPHIC SCALE 3/16" = 1'-0"

Rev.	Description	Date	Appr.

Designed by: Designer
Drawn by: Author
Reviewed by: Checker
Submitted by: Approver
Submitted: 20 MAY 2021
File:
Scale: 3/16" = 1'-0"
Project Number: Project Number
REV:

Residence for Justin & Aimee Naylor

3441 Hidden Meadow Circle
Morgan, UT 84050

EXTERIOR ELEVATIONS

SHEET NUMBER
A-202

PLOT DATE: 5/20/2021 9:32:24 PM

KEYED NOTES

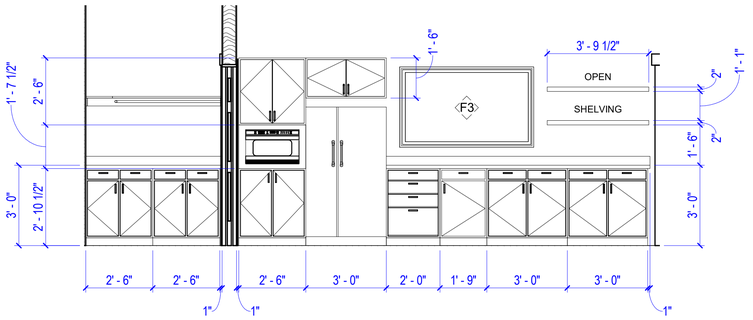

2 KITCHEN SOUTH ELEVATION
3/8" = 1'-0"

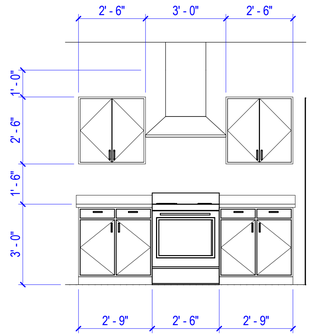

1 KITCHEN EAST ELEVATION
3/8" = 1'-0"

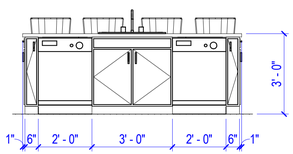

6 KITCHEN ISLAND WEST ELEVATION
3/8" = 1'-0"

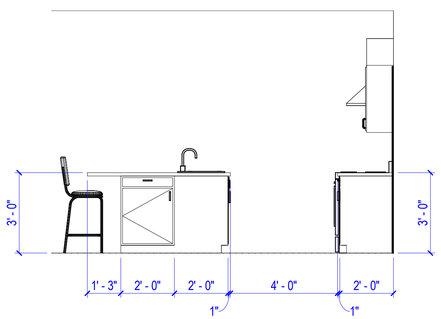

5 KITCHEN ISLAND SOUTH ELEVATION
3/8" = 1'-0"

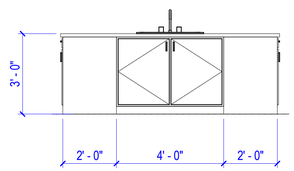

4 KITCHEN ISLAND EAST ELEVATION
3/8" = 1'-0"

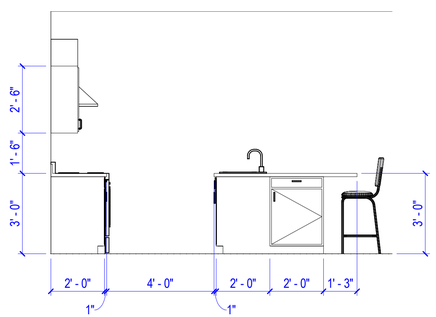

3 KITCHEN ISLAND NORTH ELEVATION
3/8" = 1'-0"

GRAPHIC SCALE
32" 1' 0" 1' 2' 4' 8'
3/8" = 1'-0"

Rev.	Description	Date	Appr.

REV:

Designed by: RME
Drawn by:
Submitted: 20 MAY 2021
File:
Reviewed by: RME
Scale: As indicated
Submitted by:
Project Number: Project Number

Residence for Justin & Aimee Naylor

3441 Hidden Meadow Circle
Morgan, UT 84050

INTERIOR ELEVATIONS

SHEET NUMBER
A-203

PLOT DATE: 5/20/2021 9:32:26 PM

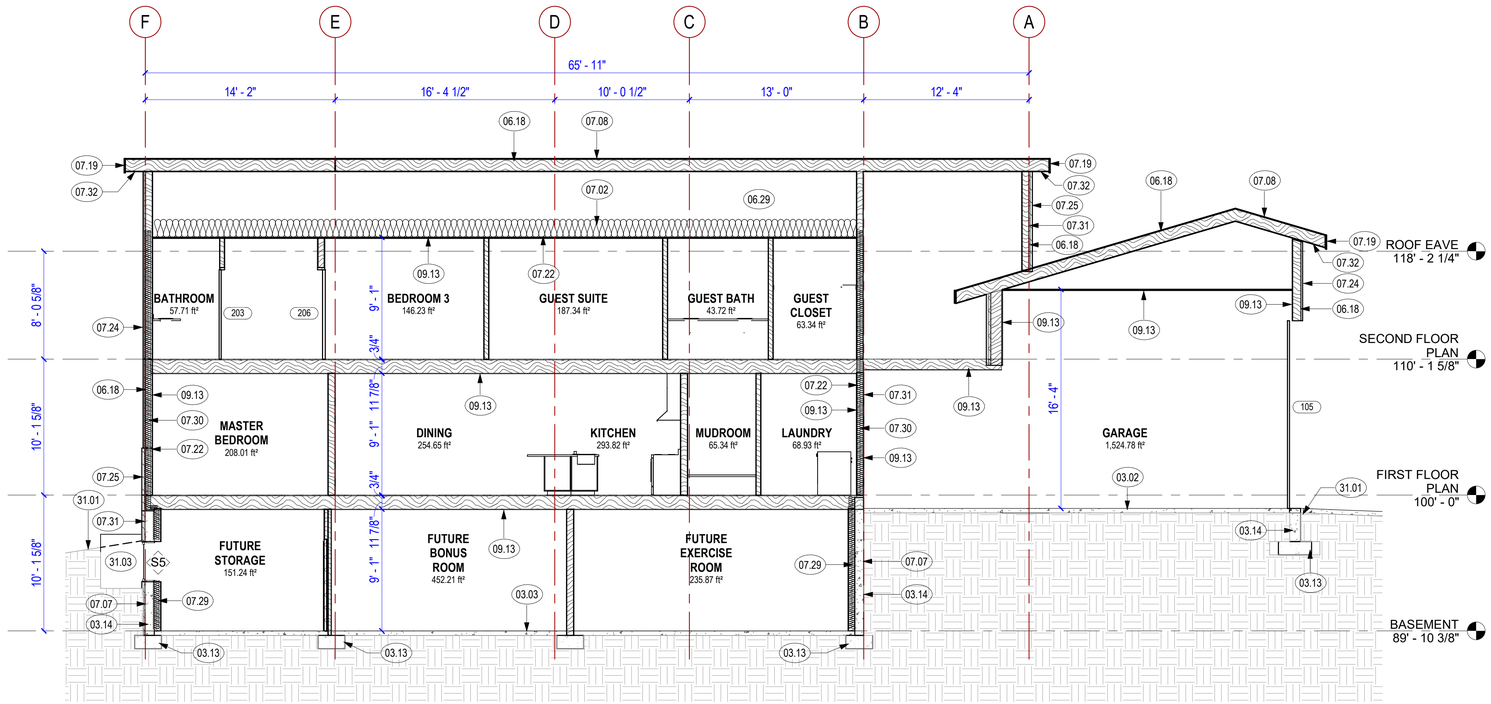

1 BUILDING SECTION 01
3/16" = 1'-0"

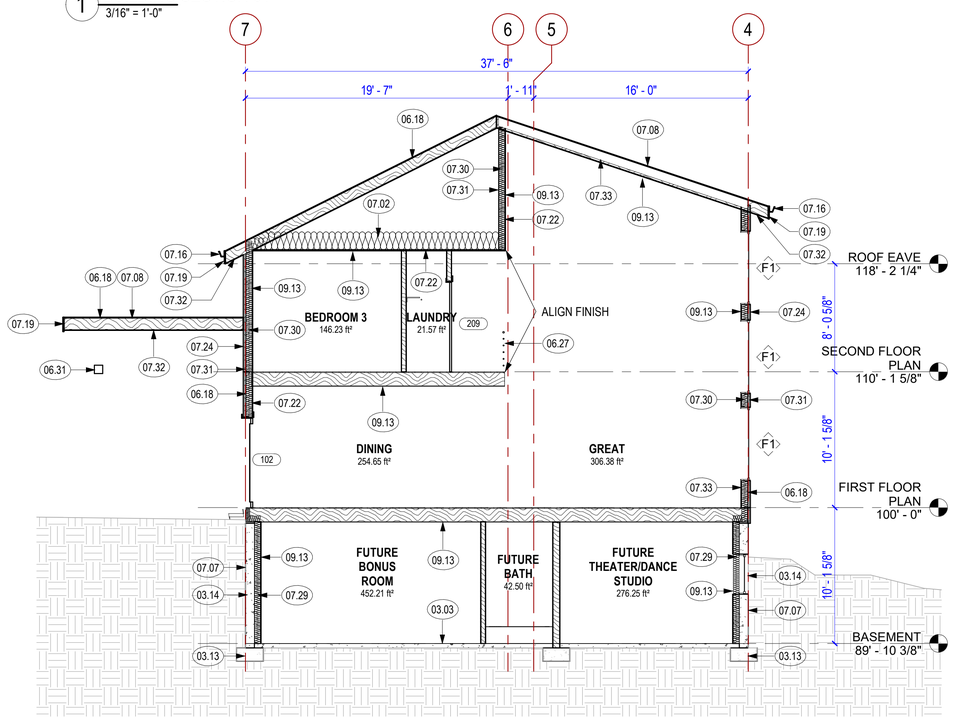

4 BUILDING SECTION 02
3/16" = 1'-0"

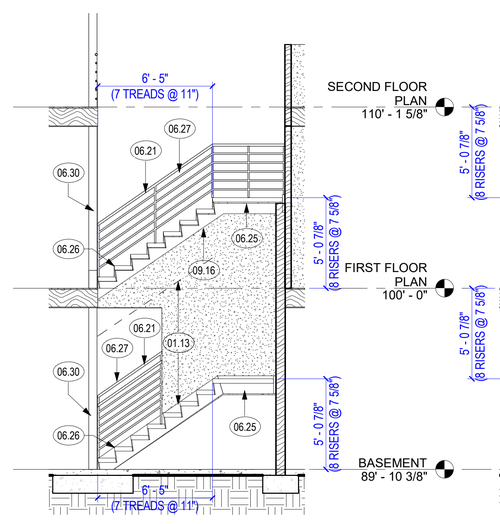

3 STAIR SECTION 1
1/4" = 1'-0"

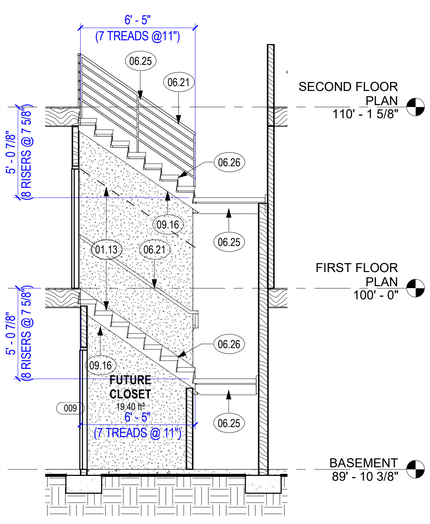

2 STAIR SECTION 2
1/4" = 1'-0"

KEYED NOTES

01.13 6' - 8" HEADROOM CLEARANCE MINIMUM MEASURED VERTICALLY FROM THE SLOPED PLAN ADJOINING THE TREAD NOSING OR FROM THE FLOOR SURFACE OF THE LANDING OR PLATFORM

03.02 4" CONCRETE FLOOR SLAB (UNHEATED SPACES) OVER A 4-INCH-THICK (102 MM) BASE COURSE CONSISTING OF CLEAN GRADED SAND, GRAVEL, CRUSHED STONE OR CRUSHED BLAST-FURNACE SLAG PASSING A 2-INCH (51 MM) SIEVE SHALL BE PLACED ON THE PREPARED SUBGRADE WHEN THE SLAB IS BELOW GRADE. (R506.2.2 BASE)

03.03 4" CONCRETE FLOOR SLAB (INTERIOR, CONDITIONED SPACES) OVER A 6-MIL (0.006 INCH; 152 μM) POLYETHYLENE OR APPROVED VAPOR RETARDER WITH JOINTS LAPPED NOT LESS THAN 6 INCHES (152 MM) SHALL BE PLACED BETWEEN THE CONCRETE FLOOR SLAB AND THE BASE COURSE OR THE PREPARED SUBGRADE WHERE NO BASE COURSE EXISTS (R506.2.3) OVER A 4-INCH-THICK (102 MM) BASE COURSE CONSISTING OF CLEAN GRADED SAND, GRAVEL, CRUSHED STONE OR CRUSHED BLAST-FURNACE SLAG PASSING A 2-INCH (51 MM) SIEVE SHALL BE PLACED ON THE PREPARED SUBGRADE WHEN THE SLAB IS BELOW GRADE. (R506.2.2 BASE)

03.13 FOOTING, SEE STRUCTURAL

03.14 FOUNDATION WALL, SEE STRUCTURAL

06.18 SHEATHING, SEE STRUCTURAL DRAWINGS

06.21 HANDRAIL SIZE TO BE 1 1/4" TO 2 5/8", HANDRAILS SHALL TERMINATE TO WALLS OR NEWEL POSTS. MAX 4" SPACING BETWEEN BALUSTERS. HANDRAIL IS TO BE PLACED 34" TO 38" ABOVE THE NOSE OF THE TREADS VERTICALLY TO THE TOP RAIL. THEY SHALL BE CONTINUOUS THE FULL LENGTH OF THE STAIRS. THE HANDGRIP PORTION SHALL BE NOT LESS THAN 1 1/4" NOR MORE THAN 2" IN CROSS-SECTIONAL DIMENSION. HANDRAILS PROJECTING FROM A WALL SHALL HAVE A SPACE OF NOT LESS THAN 1 1/2" BETWEEN THE WALL AND THE HANDRAIL

06.25 STAIRS ARE TO BE CONSTRUCTED WITH (3) 2x12 (OR EQUIVALENT) STAIR STRINGERS, TYP. ALL TREAD RUN OR RISER WITHIN FLIGHT OF STAIRS SHALL NOT EXCEED THE SMALLEST BY MORE THAN 3/8". MAXIMUM RISE 7" MINIMUM TREAD 9". STAIR RISERS SHALL BE SOLID

06.26 STAIR NOSING TO BE 3/4" MIN. TO 1 1/4" MAX

06.27 36" HIGH GUARDS SHALL BE PROVIDED ON PORCHES, BALCONIES AND RAISED FLOOR SURFACES LOCATED MORE THAN 30" ABOVE THE FLOOR OR GRADE BELOW. OPEN SIDE OF STAIRS WITH A TOTAL RISE OF 30" ABOVE THE FLOOR OR GRADE BELOW SHALL HAVE GUARDS AT LEAST 34" HIGH. GUARDS WILL HAVE AN ORNAMENTAL PATTERN SUCH THAT A SPHERE 4" IN DIAMETER CANNOT PASS THROUGH. THE TRIANGULAR SPACE CREATED BY THE STAIR AND A BOTTOM RAIL MAY BE CONSTRUCTED SO A 6" SPHERE WILL NOT PASS THROUGH. (R312)

06.29 PRE-FABRICATED ROOF TRUSS, SEE STRUCTURAL

06.30 COLUMN, SEE STRUCTURAL

06.31 TRUSS, SEE STRUCTURAL

07.02 R-49 BATT ROOF INSULATION WITH CONTINUOUS MIN 1" AIR SPACE ABOVE BATTS

07.07 FOUNDATION DAMPROOFING ON ALL BELOW GRADE SURFACES

07.08 DARK GRAY ASPHALT SHINGLES OVER 30lb ROOFING FELTS, COLOR TO BE SELECTED BY OWNER

07.16 GUTTER

07.19 PAINTED WOOD FASCIA, COLOR BLACK

07.22 CONTINUOUS VAPOR RETARDER ON THE WARM SIDE OF ALL WALLS AND CEILINGS IN CONDITIONED SPACES, OVERLAP JOINTS AT LEAST 6 INCHES AND SEAL WITH PRESSURE SENSITIVE TAPE, SEAL AT SILL, HEADER, WINDOWS, DOORS AND UTILITY PENETRATIONS, REPAIR PUNCTURES OR TEARS WITH PRESSURE SENSITIVE TAPE

07.24 NAVY BLUE BOARD AND BATTEN VERTICAL SIDING OVER "TYVEK" OR EQUIVALENT, COLOR TO BE SELECTED Y OWNER

07.25 2" STONE VENEER, HARRISTONE, FLINT HILLS LUEDERS, OVER "TYVEK" OR EQUIVALENT

07.29 R-19 BATT WALL INSULATION AT BASEMENT FURRING

07.30 R-20 BATT WALL INSULATION

07.31 1" CONTINUOUS R-5 RIGID INSULATION BOARD

07.32 SOLID ALUMINUM SOFFIT

07.33 R-49 CLOSED CELL SPRAY FOAM INSULATION APPLIED TO THE UNDERSIDE OF THE ROOF SHEATHING

09.13 1/2" GYPSUM BOARD

09.16 ENCLOSED SPACE UNDER STAIRS SHALL HAVE THE WALLS AND SOFFIT PROTECTED ON THE ENCLOSED SIDE WITH 1/2" GYPSUM BOARD (IRC R302.7)

31.01 FINISH GRADE, SLOPE GRADE AWAY FROM STRUCTURE @ 5% MIN. FOR A MINIMUM DISTANCE OF 10 FEET - CONTINUOUS AT PERIMETER OF STRUCTURE

31.03 WINDOW WELL TO COMPLY WITH PER IRC 310.2.3

0' 1' 2' 4' 8' 16'
GRAPHIC SCALE 1/4" = 1'-0"

Rev.	Description	Date	Appr.

REV:

Designed by: RME
Drawn by:
Submitted: 20 MAY 2021
File:
Reviewed by: RME
Scale: As indicated
Submitted by:
Project Number: Project Number

Residence for Justin & Aimee Naylor

3441 Hidden Meadow Circle
Morgan, UT 84050

BUILDING AND STAIR SECTIONS

SHEET NUMBER
A-301

PLOT DATE: 5/20/2021 9:32:29 PM

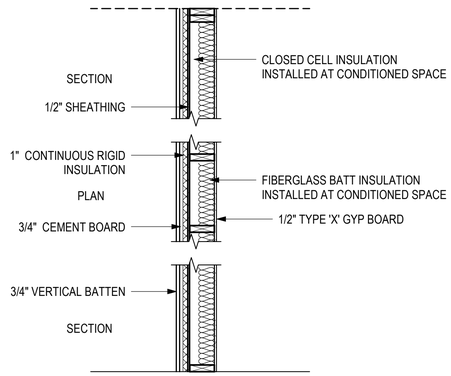

2x6 WOOD STUDS @ 16" O.C.
ATTACH BASE PLATE TO CONCRETE FLOOR SLAB WITH 3/16" x 1 1/4" PAF @ 16" O.C.
ATTACH BASE PLATE TO FLOOR SHEATHING WITH NAILS @ 16" O.C.

(1) LAYER 1/2" TYPE 'X' GYPSUM BOARD ON INTERIOR SIDE OF WALL
(1) LAYER 1/2" SHEATHING ON EXTERIOR SIDE OF WALL
(1) LAYER 1" RIGID INSULATION BOARD (R-5), OVER "TYVEK" OR EQUIVALENT ON EXTERIOR SIDE OF WALL
(1) LAYER 1 1/2" BOARD AND BATTEN ON EXTERIOR SIDE OF WALL

GYPSUM ATTACHED TO WOOD STUDS, BASE PLATE AND TOP PLATE WITH 1" LONG, TYPE S STEEL SCREWS SPACED 8" O.C. ALONG EDGES OF BOARD AND 12" O.C. IN THE FIELD OF THE BOARD. JOINTS ORIENTED VERTICALLY AND STAGGERED ON OPPOSITE SIDES OF THE ASSEMBLY.

INSTALL MIN. R-20 FIBERGLASS BATTS IN STUD CAVITY.

5 EXT. BRD & BTTN - 2X6 GYP INT. PLY, B&B EXT.2
3/4" = 1'-0"

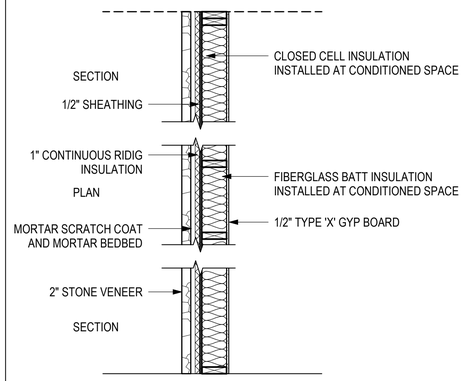

2x6 WOOD STUDS @ 16" O.C.
ATTACH BASE PLATE TO CONCRETE FLOOR SLAB WITH 3/16" x 1 1/4" PAF @ 16" O.C.
ATTACH BASE PLATE TO FLOOR SHEATHING WITH NAILS @ 16" O.C.

(1) LAYER 1/2" TYPE 'X' GYPSUM BOARD ON INTERIOR SIDE OF WALL
(1) LAYER 1/2" SHEATHING ON EXTERIOR SIDE OF WALL
(1) LAYER 1" RIGID INSULATION BOARD (R-5), OVER "TYVEK" OR EQUIVALENT ON EXTERIOR SIDE OF WALL
(1) LAYER 2" STONE VENEER ON EXTERIOR SIDE OF WALL

GYPSUM ATTACHED TO WOOD STUDS, BASE PLATE AND TOP PLATE WITH 1" LONG, TYPE S STEEL SCREWS SPACED 8" O.C. ALONG EDGES OF BOARD AND 12" O.C. IN THE FIELD OF THE BOARD. JOINTS ORIENTED VERTICALLY AND STAGGERED ON OPPOSITE SIDES OF THE ASSEMBLY.

INSTALL MIN. R-20 FIBERGLASS BATTS IN STUD CAVITY.

4 EXT. STONE - 2X6 GYP INT. PLY, STONE EXT.2
3/4" = 1'-0"

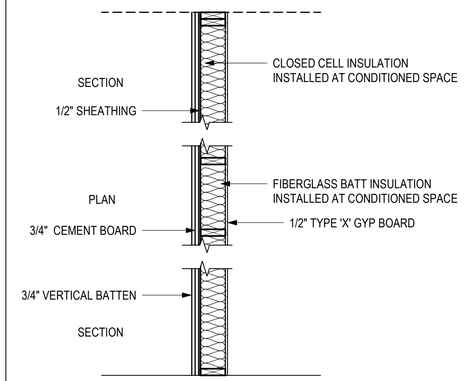

2x6 WOOD STUDS @ 16" O.C.
ATTACH BASE PLATE TO CONCRETE FLOOR SLAB WITH 3/16" x 1 1/4" PAF @ 16" O.C.
ATTACH BASE PLATE TO FLOOR SHEATHING WITH NAILS @ 16" O.C.

(1) LAYER 1/2" TYPE 'X' GYPSUM BOARD ON INTERIOR SIDE OF WALL
(1) LAYER 1/2" SHEATHING ON EXTERIOR SIDE OF WALL
(1) LAYER 1 1/2" BOARD AND BATTEN ON EXTERIOR SIDE OF WALL

GYPSUM ATTACHED TO WOOD STUDS, BASE PLATE AND TOP PLATE WITH 1" LONG, TYPE S STEEL SCREWS SPACED 8" O.C. ALONG EDGES OF BOARD AND 12" O.C. IN THE FIELD OF THE BOARD. JOINTS ORIENTED VERTICALLY AND STAGGERED ON OPPOSITE SIDES OF THE ASSEMBLY.

3 EXT. BRD & BTTN - 2X6 GYP INT. PLY, B&B EXT.
3/4" = 1'-0"

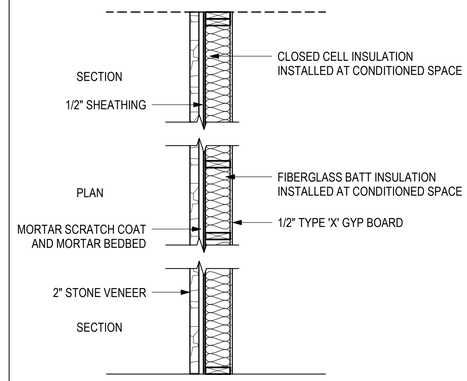

2x6 WOOD STUDS @ 16" O.C.
ATTACH BASE PLATE TO CONCRETE FLOOR SLAB WITH 3/16" x 1 1/4" PAF @ 16" O.C.
ATTACH BASE PLATE TO FLOOR SHEATHING WITH NAILS @ 16" O.C.

(1) LAYER 1/2" TYPE 'X' GYPSUM BOARD ON INTERIOR SIDE OF WALL
(1) LAYER 1/2" SHEATHING ON EXTERIOR SIDE OF WALL
(1) LAYER 2" STONE VENEER ON EXTERIOR SIDE OF WALL

GYPSUM ATTACHED TO WOOD STUDS, BASE PLATE AND TOP PLATE WITH 1" LONG, TYPE S STEEL SCREWS SPACED 8" O.C. ALONG EDGES OF BOARD AND 12" O.C. IN THE FIELD OF THE BOARD. JOINTS ORIENTED VERTICALLY AND STAGGERED ON OPPOSITE SIDES OF THE ASSEMBLY.

2 EXT. STONE - 2X6 GYP INT. PLY, STONE EXT.
3/4" = 1'-0"

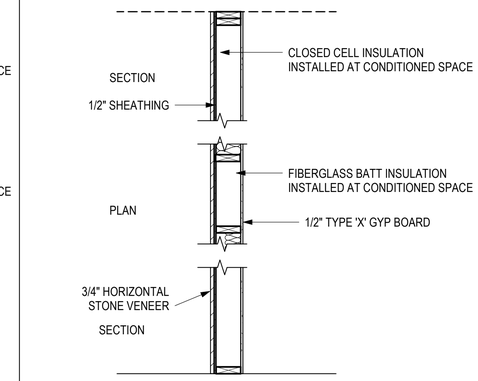

2x6 WOOD STUDS @ 16" O.C.
ATTACH BASE PLATE TO CONCRETE FLOOR SLAB WITH 3/16" x 1 1/4" PAF @ 16" O.C.
ATTACH BASE PLATE TO FLOOR SHEATHING WITH NAILS @ 16" O.C.

(1) LAYER 1/2" TYPE 'X' GYPSUM BOARD ON INTERIOR SIDE OF WALL
(1) LAYER 1/2" SHEATHING ON EXTERIOR SIDE OF WALL
(1) LAYER 3/4" STONE VENEER, CRAFT® BOARD FROM® SYCAMORE, OVER "TYVEK" OR EQUIVALENT ON EXTERIOR SIDE OF WALL

GYPSUM ATTACHED TO WOOD STUDS, BASE PLATE AND TOP PLATE WITH 1" LONG, TYPE S STEEL SCREWS SPACED 8" O.C. ALONG EDGES OF BOARD AND 12" O.C. IN THE FIELD OF THE BOARD. JOINTS ORIENTED VERTICALLY AND STAGGERED ON OPPOSITE SIDES OF THE ASSEMBLY.

WALL VARIANT:
AT BALCONY GUARDRAIL INSTALL (1) LAYER 1/2" SHEATHING ON INTERIOR SIDE OF WALL IN PLACE OF THE GYPSUM BOARD AND THEN INSTALL (1) LAYER 3/4" STONE VENEER, CRAFT® BOARD FROM® SYCAMORE, OVER "TYVEK" OR EQUIVALENT OVER THE SHEATHING.

1 EXT. SIDING - 2X6 GYP INT. PLY, SIDING EXT.
3/4" = 1'-0"

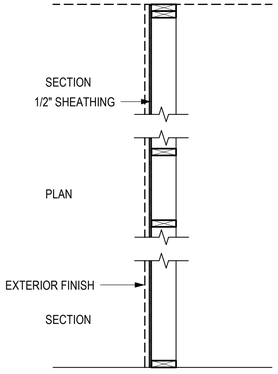

2x6 WOOD STUDS @ 16" O.C.
ATTACH BASE PLATE TO CONCRETE FLOOR SLAB WITH 3/16" x 1 1/4" PAF @ 16" O.C.
ATTACH BASE PLATE TO FLOOR SHEATHING WITH NAILS @ 16" O.C.

(1) LAYER 1/2" SHEATHING ON EXTERIOR SIDE OF WALL
(1) LAYER EXTERIOR FINISH, PER ELEVATION

NOTE:
CONTINUE EXTERIOR INSULATION WHERE INSULATION EXISTS BELOW TO MAINTAIN A CONTINOUS EXTERIOR FINISH PLANE

10 UNFINISHED ATTIC WALL - 2X6 PLY, FINISH EXT.
3/4" = 1'-0"

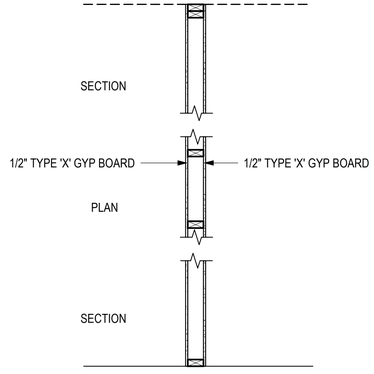

2x4 WOOD STUDS @ 16" O.C.
ATTACH BASE PLATE TO CONCRETE FLOOR SLAB WITH 3/16" x 1 1/4" PAF @ 16" O.C.
ATTACH BASE PLATE TO FLOOR SHEATHING WITH NAILS @ 16" O.C.

(1) LAYER 1/2" TYPE 'X' GYPSUM BOARD ON INTERIOR SIDE OF WALL
(1) LAYER 1/2" TYPE 'X' GYPSUM BOARD ON EXTERIOR SIDE OF WALL

GYPSUM ATTACHED TO WOOD STUDS, BASE PLATE AND TOP PLATE WITH 1" LONG, TYPE S STEEL SCREWS SPACED 8" O.C. ALONG EDGES OF BOARD AND 12" O.C. IN THE FIELD OF THE BOARD. JOINTS ORIENTED VERTICALLY AND STAGGERED ON OPPOSITE SIDES OF THE ASSEMBLY.

9 INTERIOR NON-BEARING WALL - 2X4 GYP BOTH SIDES
3/4" = 1'-0"

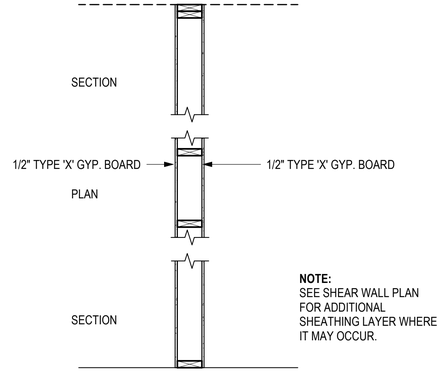

2x6 WOOD STUDS @ 16" O.C.
ATTACH BASE PLATE TO CONCRETE FLOOR SLAB WITH 3/16" x 1 1/4" PAF @ 16" O.C.
ATTACH BASE PLATE TO FLOOR SHEATHING WITH NAILS @ 16" O.C.

(1) LAYER 1/2" SHEATHING ON INTERIOR SIDE OF WALL
(1) LAYER 1/2" SHEATHING ON EXTERIOR SIDE OF WALL

GYPSUM ATTACHED TO WOOD STUDS, BASE PLATE AND TOP PLATE WITH 1" LONG, TYPE S STEEL SCREWS SPACED 8" O.C. ALONG EDGES OF BOARD AND 12" O.C. IN THE FIELD OF THE BOARD. JOINTS ORIENTED VERTICALLY AND STAGGERED ON OPPOSITE SIDES OF THE ASSEMBLY.

WALL VARIANT:
AT WALL BETWEEN OCCUPIABLE CONDITIONED SPACE AND THE GARAGE, INSTALL (1) LAYER 1" RIGID INSULATION BOARD (R-5) ON GARAGE SIDE OF WALL AND INSTALL R-20 BATT INSULATION IN WALL CAVITY

8 INTERIOR BEARING WALL - 2X6 GYP BOTH SIDES
3/4" = 1'-0"

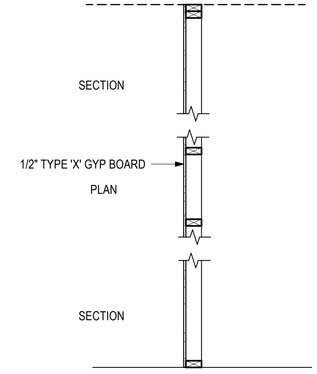

2x4 WOOD STUDS @ 16" O.C.
ATTACH BASE PLATE TO CONCRETE FLOOR SLAB WITH 3/16" x 1 1/4" PAF @ 16" O.C.
ATTACH BASE PLATE TO FLOOR SHEATHING WITH NAILS @ 16" O.C.

(1) LAYER 1/2" TYPE 'X' GYPSUM BOARD ON EXTERIOR SIDE OF WALL

GYPSUM ATTACHED TO WOOD STUDS, BASE PLATE AND TOP PLATE WITH 1" LONG, TYPE S STEEL SCREWS SPACED 8" O.C. ALONG EDGES OF BOARD AND 12" O.C. IN THE FIELD OF THE BOARD. JOINTS ORIENTED VERTICALLY AND STAGGERED ON OPPOSITE SIDES OF THE ASSEMBLY.

7 UNINSULATED FURRING/CHASE - 2X4 GYP ONE SIDE
3/4" = 1'-0"

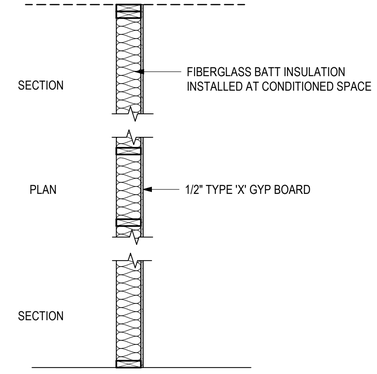

2x6 WOOD STUDS @ 16" O.C.
ATTACH BASE PLATE TO CONCRETE FLOOR SLAB WITH 3/16" x 1 1/4" PAF @ 16" O.C.
ATTACH BASE PLATE TO FLOOR SHEATHING WITH NAILS @ 16" O.C.

(1) LAYER 1/2" TYPE 'X' GYPSUM BOARD ON EXTERIOR SIDE OF WALL

GYPSUM ATTACHED TO WOOD STUDS, BASE PLATE AND TOP PLATE WITH 1" LONG, TYPE S STEEL SCREWS SPACED 8" O.C. ALONG EDGES OF BOARD AND 12" O.C. IN THE FIELD OF THE BOARD. JOINTS ORIENTED VERTICALLY AND STAGGERED ON OPPOSITE SIDES OF THE ASSEMBLY.

INSTALL MIN. R-19 FIBERGLASS BATTS IN STUD CAVITY AT CONDITIONED SPACES

6 INSULATED FURRING - 2X6 GYP ONE SIDE
3/4" = 1'-0"

Rev.	Description	Date	Appr.

REV:

Submitted: 20 MAY 2021
File:
Scale: 3/4" = 1'-0"
Project Number: Project Number

Designed by: RME
Drawn by:
Reviewed by: RME
Submitted by:

Residence for Justin & Aimee Naylor

3441 Hidden Meadow Circle
Morgan, UT 84050

WALL SECTIONS

SHEET NUMBER
A-303

PLOT DATE: 5/20/2021 9:32:30 PM

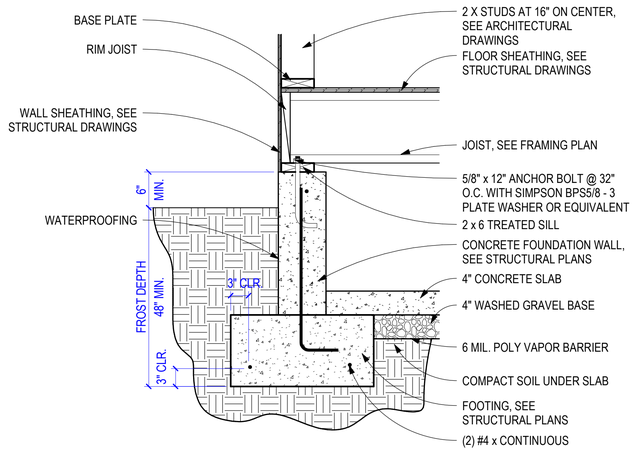

5 FOOTING DETAIL
1" = 1'-0"

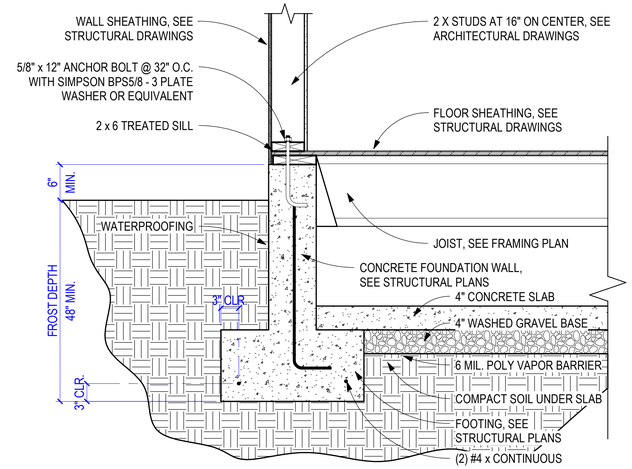

4 NEW FOOTING DETAIL
1" = 1'-0"

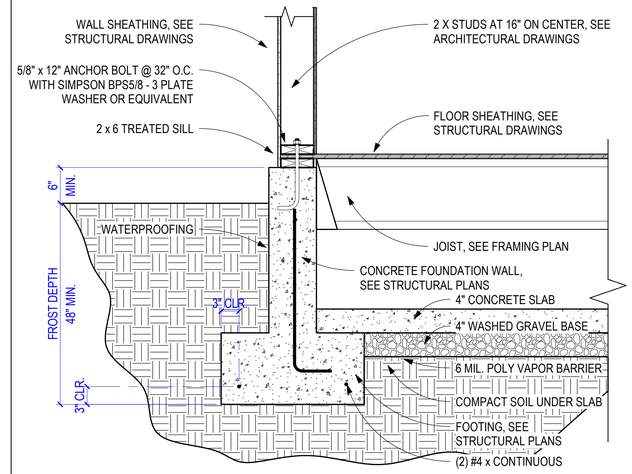

2 FOUDATION DETAIL AT 2 CAR GARAGE WEST WALL
1" = 1'-0"

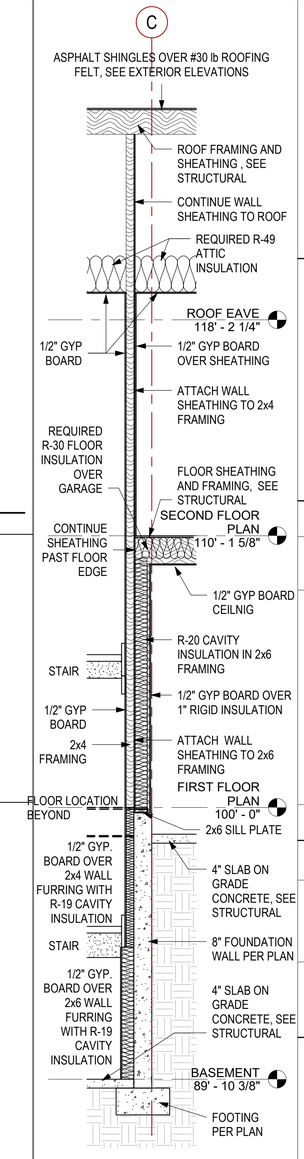

11 GARAGE WALL AT STAIR
3/8" = 1'-0"

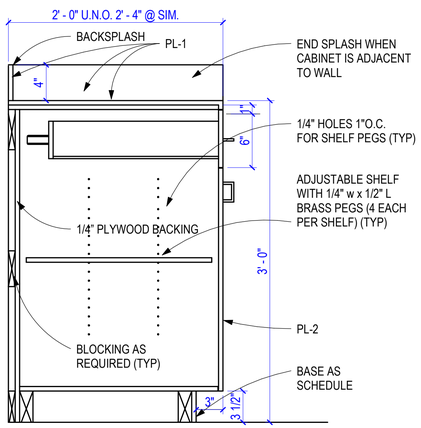

15 TYP. CABINET SECTION
1 1/2" = 1'-0"

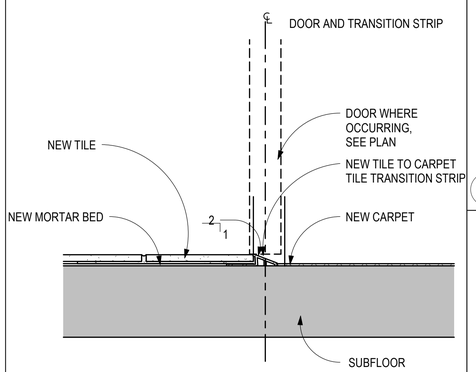

14 CERAMIC TILE TO CARPET TRANSITION
3" = 1'-0"

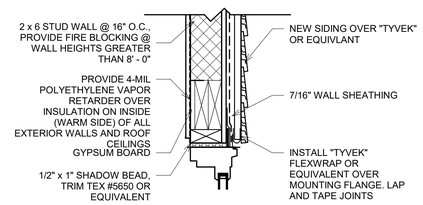

8 WINDOW HEAD FLAHSING
1 1/2" = 1'-0"

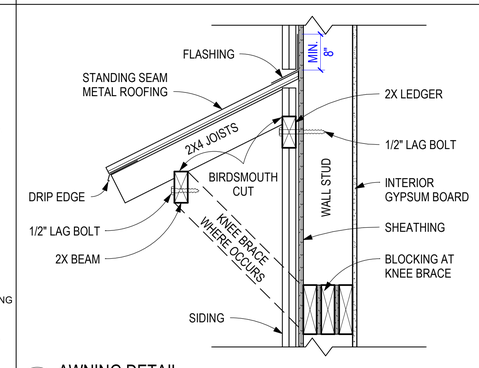

12 AWNING DETAIL
1 1/2" = 1'-0"

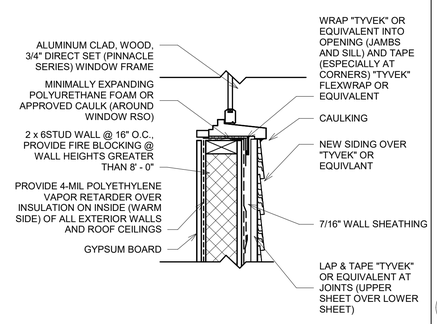

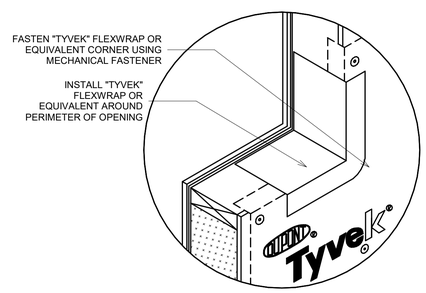

18 WINDOW SILL FLASHING
1 1/2" = 1'-0"

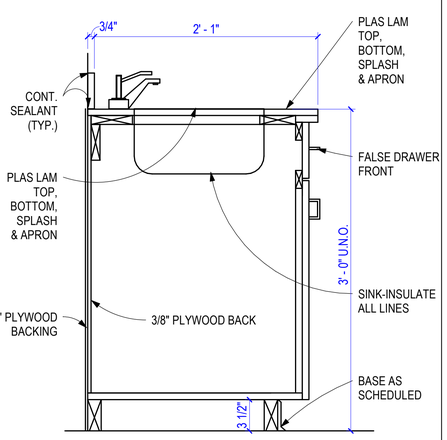

20 TYPICAL BASE CABINET WITH SINK
1 1/2" = 1'-0"

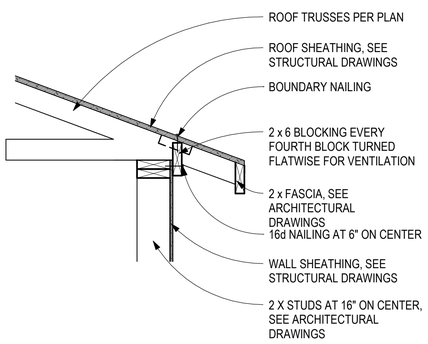

19 EAVE DETAIL
1" = 1'-0"

GRAPHIC SCALE 0' 3" 6" 9" 1' 16" — 3" = 1'-0"

GRAPHIC SCALE 8" 3" 0' 3" 6" 1' 2' — 1 1/2" = 1'-0"

GRAPHIC SCALE 0' 6" 1' 2' 3' — 1" = 1'-0"

Rev.	Description	Date	Appr.

REV:

Submitted: 20 MAY 2021
File:
Scale: As indicated
Project Number: Project Number

Designed by: RME
Drawn by:
Reviewed by: RME
Submitted by:

Residence for Justin & Aimee Naylor

3441 Hidden Meadow Circle
Morgan, UT 84050

ARCHITECTURAL DETAILS

SHEET NUMBER
A-501

PLOT DATE: 5/20/2021 9:32:32 PM

DOOR SCHEDULE

MARK	WIDTH	HEIGHT	THICK	TYPE	DOOR MAT'L & FIN.	FIRE RATE	HDWR	REMARKS
001	8' - 0"	8' - 0"	1 3/4"		WOOD (PAINTED)		ENTRY	
002	6' - 0"	6' - 8"	1 3/4"	HINGED - DOUBLE	WOOD (PAINTED)		PASSAGE	
003	2' - 6"	6' - 8"	1 3/4"	HINGED	WOOD (PAINTED)		PASSAGE	
004	3' - 0"	6' - 8"	1 3/4"	HINGED	WOOD (PAINTED)		PRIVACY	
005	3' - 0"	6' - 8"	1 3/4"	HINGED	WOOD (PAINTED)		PRIVACY	
006	2' - 6"	6' - 8"	1 3/4"	HINGED	WOOD (PAINTED)		PRIVACY	
007	3' - 0"	6' - 8"	1 3/4"	HINGED	WOOD (PAINTED)		PASSAGE	
008	3' - 0"	6' - 8"	1 3/4"	HINGED	WOOD (PAINTED)		PASSAGE	
009	2' - 10"	6' - 8"	1 3/4"	HINGED	WOOD (PAINTED)		PASSAGE	
010	3' - 0"	6' - 8"	1 3/4"	HINGED	WOOD (PAINTED)		PASSAGE	
011	3' - 0"	6' - 8"	1 3/4"	HINGED	WOOD (PAINTED)		PASSAGE	
012	3' - 0"	6' - 8"	1 3/4"	HINGED	FIBERGLASS (PAINTED)		PASSAGE	
101	3' - 0"	8' - 0"	1 3/4"	HINGED WITH 18" SIDE LITE	FIBERGLASS (PAINTED)		ENTRY	TEMPERED
102	6' - 0"	6' - 8"	1 3/4"	HINGED - DOUBLE GLASS	FIBERGLASS (PAINTED)		ENTRY	TEMPERED
103	3' - 0"	6' - 8"	1 3/4"	HINGED	FIBERGLASS (PAINTED)		ENTRY	
104	12' - 0"	14' - 0"	1 1/2"	OVERHEAD - SECTIONAL	STEEL (PAINTED)		OVERHEAD DOOR	INSULATED, R-12
105	12' - 0"	14' - 0"	1 1/2"	OVERHEAD - SECTIONAL	STEEL (PAINTED)		OVERHEAD DOOR	INSULATED, R-12
106	18' - 0"	8' - 0"	1 1/2"	OVERHEAD - SECTIONAL	STEEL (PAINTED)		OVERHEAD DOOR	INSULATED, R-12
107	5' - 0"	6' - 8"	1 3/4"	HINGED - DOUBLE	WOOD (STAINED)		PASSAGE	
108	2' - 10"	6' - 8"	1 3/4"	HINGED - DOUBLE (SALOON)	WOOD (PAINTED)		SALOON DOOR	
109	2' - 4"	6' - 8"	1 3/4"	HINGED	WOOD (PAINTED)		PRIVACY	
110	2' - 0"	7' - 1 5/8"		HINGED-GLASS	GLASS		SHOWER	SHOWER DOOR, TEMPERED
111	3' - 6"	6' - 8"	1 3/8"	BARN DOOR	WOOD (STAINED)		BARN DOOR	
112	2' - 8"	6' - 8"	1 3/4"	HINGED	WOOD (PAINTED)		PRIVACY	
113	2' - 8"	6' - 8"	1 3/4"	POCKET	WOOD (PAINTED)		POCKET-PASSAGE	
114	3' - 0"	6' - 8"	1 3/4"	HINGED	WOOD (PAINTED)		PASSAGE	
115	2' - 4"	6' - 8"	1 3/8"	POCKET	WOOD (PAINTED)		POCKET-PRIVACY	
116	4' - 0"	6' - 8"	1 3/4"	HINGED - DOUBLE	WOOD (PAINTED)		PASSAGE	
117	3' - 0"	6' - 8"	1 3/4"	HINGED	FIBERGLASS (PAINTED)	20 MIN.	ENTRY	
118	3' - 0"	6' - 8"	1 3/4"	HINGED	WOOD (PAINTED)		PASSAGE	
201	2' - 8"	6' - 8"	1 3/4"	HINGED	WOOD (PAINTED)		PRIVACY	
202	2' - 4"	6' - 8"	1 3/4"	HINGED	WOOD (PAINTED)		PASSAGE	
203	2' - 4"	6' - 8"	1 3/4"	HINGED	WOOD (PAINTED)		PRIVACY	
204	2' - 4"	6' - 8"	1 3/4"	HINGED	WOOD (PAINTED)		PRIVACY	
205	4' - 0"	6' - 8"	1 3/4"	HINGED - DOUBLE	WOOD (PAINTED)		PASSAGE	
206	2' - 8"	6' - 8"	1 3/4"	HINGED	WOOD (PAINTED)		PRIVACY	
207	2' - 4"	6' - 8"	1 3/4"	HINGED	WOOD (PAINTED)		PASSAGE	
208	2' - 0"	6' - 8"	1 3/4"	HINGED	WOOD PAINTED		PASSAGE	
209	6' - 0"	6' - 8"	1 3/4"	HINGED - DOUBLE	WOOD (PAINTED)		PASSAGE	
210	2' - 8"	6' - 8"	1 3/4"	HINGED	WOOD (PAINTED)		PRIVACY	
211	3' - 0"	6' - 8"	1 3/8"	BARN DOOR	WOOD (STAINED)	---	BARN DOOR	
212	2' - 0"	8' - 0 5/8"		HINGED-GLASS	GLASS		SHOWER	SHOWER DOOR, TEMPERED
213	2' - 4"	6' - 8"	1 3/4"	HINGED	WOOD (PAINTED)		PRIVACY	
214	3' - 0"	6' - 8"	1 3/4"	HINGED	WOOD (PAINTED)		PASSAGE	
215	2' - 4"	6' - 8"	1 3/8"	POCKET	WOOD (PAINTED)		PRIVACY	
216	3' - 0"	6' - 8"	1 3/4"	HINGED	WOOD (PAINTED)		PASSAGE	
217	11' - 11"	6' - 9"	2 1/4"	BI-PARTING-SLIDING	FIBERGLASS (PAINTED)		ENTRY	TEMPERED

WINDOW SCHEDULE

QTY.	TYPE MARK	SIZE WIDTH	SIZE HEIGHT	EGRESS	TYPE	FRAME MAT'L	FRAME FIN	GLASS TYPE	REMARKS
3	F1	4' - 0"	5' - 6"	NO	FIXED	VINYL	TAUPE	LOW E DOUBLE PANE	
1	F2	5' - 0"	1' - 6"	NO	FIXED	VINYL	TAUPE	LOW E DOUBLE PANE	TEMPERED
1	F3	5' - 0"	3' - 0"	NO	FIXED	VINYL	TAUPE	LOW E DOUBLE PANE	
2	F4	3' - 0"	5' - 6"	NO	FIXED	VINYL	TAUPE	LOW E DOUBLE PANE	
2	F5	3' - 0"	2' - 0"	NO	FIXED	VINYL	TAUPE	LOW E DOUBLE PANE	
3	F6	2' - 4"	3' - 8"	NO	FIXED	VINYL	TAUPE	LOW E DOUBLE PANE	
1	F7	3' - 6"	1' - 6"	NO	FIXED	VINYL	TAUPE	LOW E DOUBLE PANE	TEMPERED
2	F8	2' - 0"	4' - 0"	NO	FIXED	VINYL	TAUPE	LOW E DOUBLE PANE	
1	F9	3' - 0"	3' - 8"	NO	FIXED	VINYL	TAUPE	LOW E DOUBLE PANE	
2	H1	3' - 0"	5' - 6"	NO	SINGLE HUNG	VINYL	TAUPE	LOW E DOUBLE PANE	
2	H2	2' - 0"	3' - 0"	NO	SINGLE HUNG	VINYL	TAUPE	LOW E DOUBLE PANE	
1	H3	2' - 0"	3' - 0"	NO	SINGLE HUNG	VINYL	TAUPE	LOW E DOUBLE PANE	TEMPERED
1	S1	6' - 0"	4' - 0"	YES	SLIDER	VINYL	TAUPE	LOW E DOUBLE PANE	
3	S2	6' - 0"	3' - 8"	NO	SLIDER	VINYL	TAUPE	LOW E DOUBLE PANE	
1	S3	4' - 0"	4' - 0"	YES	SLIDER	VINYL	TAUPE	LOW E DOUBLE PANE	
1	S4	5' - 0"	3' - 8"	NO	SLIDER	VINYL	TAUPE	LOW E DOUBLE PANE	
5	S5	4' - 0"	3' - 0"	YES	SLIDER	VINYL	TAUPE	LOW E DOUBLE PANE	
1	S7	5' - 0"	4' - 0"	YES	SLIDER	VINYL	TAUPE	LOW E DOUBLE PANE	

Rev.	Description	Date	Appr.

REV:

Submitted: 20 MAY 2021

Designed by: RME

Drawn by:

File:

Reviewed by: RME

Scale:

Submitted by:

Project Number: Project Number

Residence for Justin & Aimee Naylor

3441 Hidden Meadow Circle
Morgan, UT 84050

SCHEDULES

SHEET NUMBER

A-601

PLOT DATE: 5/20/2021 9:32:34 PM

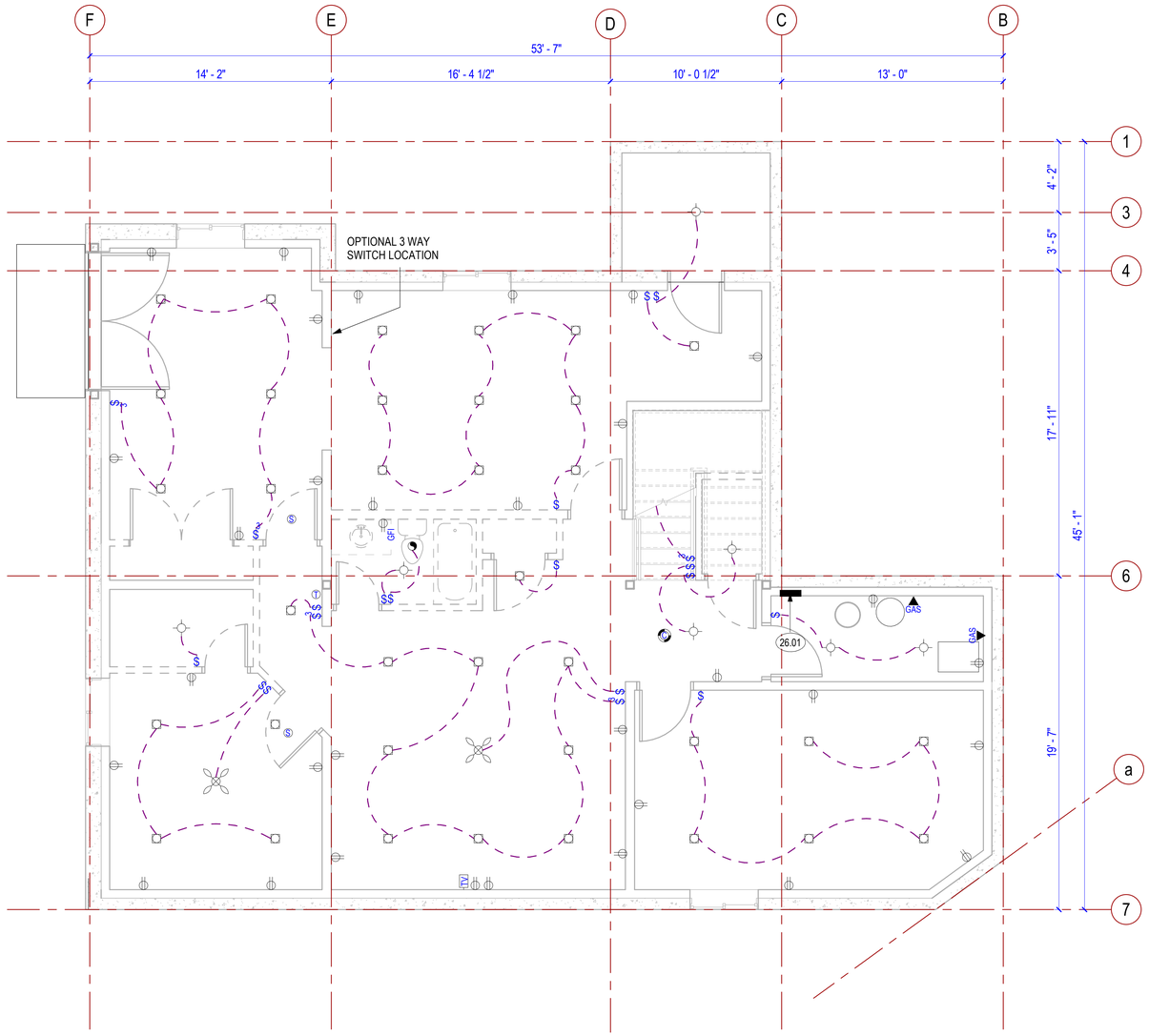

NORTH

1 BASEMENT ELECTRICAL PLAN
1/4" = 1'-0"

KEYED NOTES

26.01 NEW RECESSED ELECTRICAL PANEL LOCATION, PROVIDE A UFER GROUND. ELECTRICAL PANELS PENETRATING THE GARAGE SIDE GYPSUM BOARD MEMBRANE SHALL BE WRAPPED WITH 5/8" TYPE 'X' GYPSUM BOARD ON THE TOP, BOTTOM, SIDES AND BACK.

ELECTRICAL NOTES

1. AT LEAST ONE WALL SWITCH CONTROLLED LIGHTING OUTLET SHALL BE INSTALLED IN EVERY HABITABLE ROOM; IN BATHROOMS, HALLWAYS, STAIRWAYS, ATTACHED GARAGES AND DETACHED GARAGES WITH ELECTRIC POWER; AND AT OUTDOOR ENTRANCES (NOT INCLUDING GARAGE OVERHEAD OR VEHICLE DOORS). IN HABITABLE ROOMS, OTHER THAN KITCHENS AND BATHROOMS, RECEPTACLES CONTROLLED BY A WALL SWITCH IS PERMITTED IN LIEU OF LIGHTING OUTLETS. (E3903)
2. AT LEAST ONE SWITCH CONTROLLED, LIGHTING OUTLET IS REQUIRED AT THE ENTRY OF ATTIC, CRAWL SPACE, UTILITY ROOM OR BASEMENT WITH STORAGE OR EQUIPMENT. THE LIGHTING OUTLET SHALL BE PROVIDED AT OR NEAR ANY EQUIPMENT REQUIRING SERVICING. (E3903.4)
3. LIGHTING IS REQUIRED FOR ALL INTERIOR AND EXTERIOR STAIRWAYS. LIGHTING OUTLETS AT STAIRS SHALL BE SWITCHED AT EACH FLOOR LEVEL WHERE THE DIFFERENCE BETWEEN FLOOR LEVELS IS SIX STEPS OR MORE. (E3903.3)
4. INCANDESCENT FIXTURES IN CLOSETS SHALL BE A MINIMUM OF 12" FROM ANY SHELF EDGE, MEASURED HORIZONTALLY (6" FOR FLUORESCENT FIXTURES). THE DIMENSION FOR SHELVES LESS THAN 12" WIDE WILL BE 24" FROM THE WALL. (E4003.12)
5. FIXTURES CANNOT BE LOCATED WITHIN 3 FEET HORIZONTALLY OR 8 FEET VERTICALLY OF BATHTUBS OR SHOWERS. E4003.11
6. HALIDE LIGHTS SHALL HAVE A CONTAINMENT BARRIER. (COVER) E4003.8
7. SWITCHES SHALL NOT BE INSTALLED IN TUB OR SHOWER SPACES. (E4001.7)
8. IN EVERY KITCHEN, FAMILY ROOM, DINING ROOM, LIVING ROOM, PARLOR, LIBRARY, DEN, SUN ROOM, BEDROOM, RECREATION ROOM, OR SIMILAR ROOM RECEPTACLE OUTLETS SHALL BE INSTALLED SO THAT NO POINT ALONG THE FLOOR LINE IN ANY WALL SPACE IS MORE THAN 6' FROM AN OUTLET (MEASURED HORIZONTALLY). THE WALL SPACE AFFORDED BY FIXED ROOM DIVIDERS, SUCH AS, FREE-STANDING COUNTERS OR RAILINGS SHALL BE INCLUDED IN THE 6' MEASUREMENT. ANY WALL OR SPACE 2' OR MORE WIDE SHALL BE CONSIDERED AS ANOTHER WALL SPACE WITHIN THE ROOM. (E3901.2)
9. KITCHEN, PANTRY AND DINING AREA COUNTER TOPS SHALL HAVE RECEPTACLE OUTLETS AT EACH COUNTER SPACE WIDER THAN 12". RECEPTACLES SHALL BE INSTALLED SO THAT NO POINT ALONG THE WALL LINE IS MORE THAN 24" FROM AN OUTLET. ONE OUTLET IS REQUIRED FOR ISLAND AND PENINSULAR COUNTER TOPS WHICH SHALL BE INSTALLED ABOVE OR WITHIN 12" BELOW THE COUNTER TOP. RECEPTACLES SHALL NOT BE INSTALLED IN A FACE-UP POSITION. (E3901.4)
10. 120V RECEPTACLES FOR SERVICE AND MAINTENANCE SHALL BE LOCATED WITHIN 25' OF FURNACES AND AIR CONDITIONING EQUIPMENT IN ATTICS AND CRAWLSPACES. (E3901.11)
11. OUTLETS SHALL BE INSTALLED IN BATHROOMS WITHIN 36"OF THE OUTSIDE EDGE OF THE BASIN ON THE WALL ADJACENT TO THE BASIN. (E3901.6)
12. AT LEAST TWO OUTLETS ACCESSIBLE AT GROUND LEVEL SHALL BE INSTALLED OUTDOORS. THERE SHALL BE A MINIMUM OF ONE OUTLET AT THE FRONT AND ONE OUTLET AT THE BACK OF DWELLING WITHIN 6'-6" OF GRADE. BALCONIES AND DECKS > 20SQ.FT SHALL HAVE ONE OUTLET WITHIN THE PERIMETER. (E3901.7)
13. AT LEAST ONE OUTLET SHALL BE INSTALLED FOR THE LAUNDRY. (E3901.8)
14. AT LEAST ONE OUTLET, IN ADDITION TO ANY PROVIDED FOR LAUNDRY, SHALL BE INSTALLED IN EACH BASEMENT AND EACH ATTACHED GARAGE, AND IN EACH DETACHED GARAGE WITH ELECTRIC POWER. (E3901.9)
15. FOR HALLWAYS 10' OR MORE LONG, ONE OUTLET SHALL BE PROVIDED. (E3901.10)
16. OUTLETS INSTALLED IN GARAGES MUST BE AT LEAST 18" ABOVE THE FLOOR. IMC 304.3
17. GEN. PURPOSE RECEPTACLES 125 VOLT 15 & 20 AMP SHALL BE TAMPER PROOF. (E4002.14)
18. ALL 125-VOLT, SINGLE-PHASE 15- AND 20-AMPERE RECEPTACLES SHALL BE LISTED AS TAMPER RESISTANT RECEPTACLES. NO EXCEPTIONS FOR RECEPTACLES ON CEILINGS, ABOVE COUNTERS OR BEHIND APPLIANCES.
19. GROUND FAULT CIRCUIT INTERRUPTERS (GFCI) ARE REQUIRED IN THE FOLLOWING LOCATIONS (E3902): OUTLETS WITHIN 6 FEET OF LAUNDRY, UTILITY & BAR SINKS, RECEPTACLES IN BATHROOMS, RECEPTACLES IN GARAGES / ACCESSORY STRUCTURE, RECEPTACLES OUTDOORS INCLUDIONG BALCONIES, ROOF, UNDER EAVES, ETC., RECEPTACLES IN CRAWL SPACES AND UNFINISHED BASEMENTS, ALL RECEPTACLES SERVING KITCHEN COUNTER TOPS, RECPTACLES FOR HOT TUBS (E4208), HYDRO-MASSAGE BATHTUBS / BOND ALL METAL PARTS, PUMP MOTORS, ETC. WITH # I SOLID CONDUCTOR. (E4209)
20. ARC FAULT RECEPTACLES REQUIRED IN BEDROOMS (E3902.11) PER STATE AMENDMENT.
21. ALL BRANCH CIRCUITS SUPPLYING POWER TO OUTLETS IN ALL FAMILY ROOMS, DINING ROOMS, LIVING ROOMS, PARLORS, DENS, SUNROOMS, RECREATION ROOMS, CLOSETS, HALLWAYS, BEDROOMS AND SIMILAR AREAS SHALL BE PROTECTED BY AN ARC-FAULT CIRCUIT INTERRUPTER LISTED TO PROVIDE PROTECTION OF THE ENTIRE BRANCH CIRCUIT.
22. PERMANENT ACCESS MUST BE PROVIDED TO ALL HOT TUB AND WHIRLPOOL TUB EQUIPMENT REQUIRING SERVICE. (E4209.3)
23. IN NEW CONSTRUCTION, THE REQUIRED SMOKE AND MULTIPLE STATION SMOKE ALARMS SHALL RECEIVE THEIR PRIMARY POWER FROM THE BUILDING WIRING AND BE EQUIPPED WITH A BATTERY BACK-UP.
24. SINGLE AND MULTIPLE STATION ALARMS SHALL BE MOUNTED ON THE CEILING OR WALL AT A POINT CENTRALLY LOCATED IN THE HALL OR AREA GIVING ACCESS TO EACH SEPARATE SLEEPING AREA AND IN EVERY BEDROOM.
25. WHEN A HOUSE HAS MORE THAN ONE STORY AND/OR HAS A BASEMENT, A DETECTOR SHALL BE INSTALLED ON EACH STORY AND IN THE BASEMENT. WHERE A STORY OR BASEMENT IS SPLIT INTO TWO OR MORE LEVELS, THE SMOKE DETECTOR SHALL BE INSTALLED ON THE UPPER LEVEL OF EACH STORY. HOWEVER, WHEN THE LOWER LEVEL CONTAINS A SLEEPING AREA, A DETECTOR SHALL BE INSTALLED ON EACH LEVEL OF THE STORY OR BASEMENT.
26. DETECTORS SHALL BE WIRED IN SERIES SO THAT AN AUDIBLE ALARM SOUNDS IN ALL SLEEPING AREAS AT THE SAME TIME.
27. CARBON MONOXIDE ALARMS SHALL BE INSTALLED ON EACH HABITABLE LEVEL IN STRUCTURES WITH FUEL BURNING APPLIANCES. THE ALARMS SHALL BE HARD WIRED AND INTERCONNECTED. (R315.1)
28. THE ELECTRICAL PANEL SHALL HAVE A CLEAR WORKING SPACE 30" WIDE, 36" DEEP AND 6'-6" HIGH IN FRONT. (E3405.2)
29. CONCRETE-ENCASED ELECTRODE (UFER GROUND) INSTALL AN ELECTRODE ENCASED BY AT LEAST 2 INCHES OF CONCRETE, LOCATED WITHIN OR NEAR THE BOTTOM OF A CONCRETE FOUNDATION OR FOOTING WHICH IS IN DIRECT CONTACT WITH THE EARTH, CONSISTING OF AT LEAST 20 FEET OF ONE OR MORE BARE OR ZINC-GALVANIZED OR OTHER ELECTRICALLY CONDUCTIVE COATED STEEL REINFORCING BARS OR RODS OF NOT LESS THAN 1/2 INCH DIAMETER. REINFORCING BARS SHALL BE PERMITTED TO BE BONDED TOGETHER BY THE USUAL STEEL TIE WIRES OR OTHER EFFECTIVE MEANS.
30. ALL ELECTRICAL INSTALLATION SHALL COMPLY WITH THE 2018 IRC & 2011 NEC.
31. SHOW A PERMANENT CERTIFICATE BY THE ELECTRICAL PANEL SHOWING INSULATION R-VALUES, WINDOW U-FACTORS, AND EFFICIENCIES OF THE MECHANICAL SYSTEM COMPONENTS.

ELECTRICAL LEGEND

	110V DUPLEX OUTLET	S	SWITCH
GFI	GFCI OUTLET	S3	SWITCH 3-WAY
WP	WEATHERPROOF GFCI OUTLET WITH WP COVER	T	THERMOSTAT
DW	DISHWASHER OUTLET		EXHAUST FAN
DISP	SWITCHED OUTLET FOR GARBAGE DISPOSAL	TV	TELEVISION JACK
240	240 V OUTLET	P	PHONE JACK
	FLOOR/SOFFIT OUTLET	GAS	GAS APPLIANCE HOOKUP
	LIGHT FIXTURE		CEILING FAN / LIGHT
	WALL-MOUNTED LIGHT FIXTURE	S	SMOKE DETECTOR
	CAN LIGHT FIXTURE		SMOKE & CARBON MONOXIDE DETECTOR
	FLOOD LIGHT FIXTURE		ELECTRICAL PANEL
	2'x4' LIGHT FIXTURE		EMERGENCY EXIT LIGHT
	2'x4' EMERGENCY LIGHT FIXTURE		PHOTOCELL
	2'x4' LIGHT FIXTURE - SURFACE MOUNTED		1'x4' LIGHT FIXTURE
OS	OCCUPANCY SENSOR	SPOT	SPOTLIGHT
	CATV	CH	CHIME
OPENER	GARAGE DOOR OPENER	CO-1	CARBON MONOXIDE SENSOR

0' 1' 2' 4' 8' 16'
GRAPHIC SCALE 1/4" = 1'-0"

Rev.	Description	Date	Appr.

Designed by: Designer
Drawn by: Author
Reviewed by: Checker
Submitted by: Approver
Submitted: 20 MAY 2021
REV:
File:
Scale: As indicated
Project Number: Project Number

Residence for Justin & Aimee Naylor

3441 Hidden Meadow Circle
Morgan, UT 84050

BASEMENT ELECTRICAL PLAN AND NOTES

SHEET NUMBER
E-100

PLOT DATE: 5/20/2021 9:32:48 PM

KEYED NOTES

26.06 PROVIDE POWER FOR RANGE HOOD
26.14 NEW ELECTRICAL SERVICE AND METER

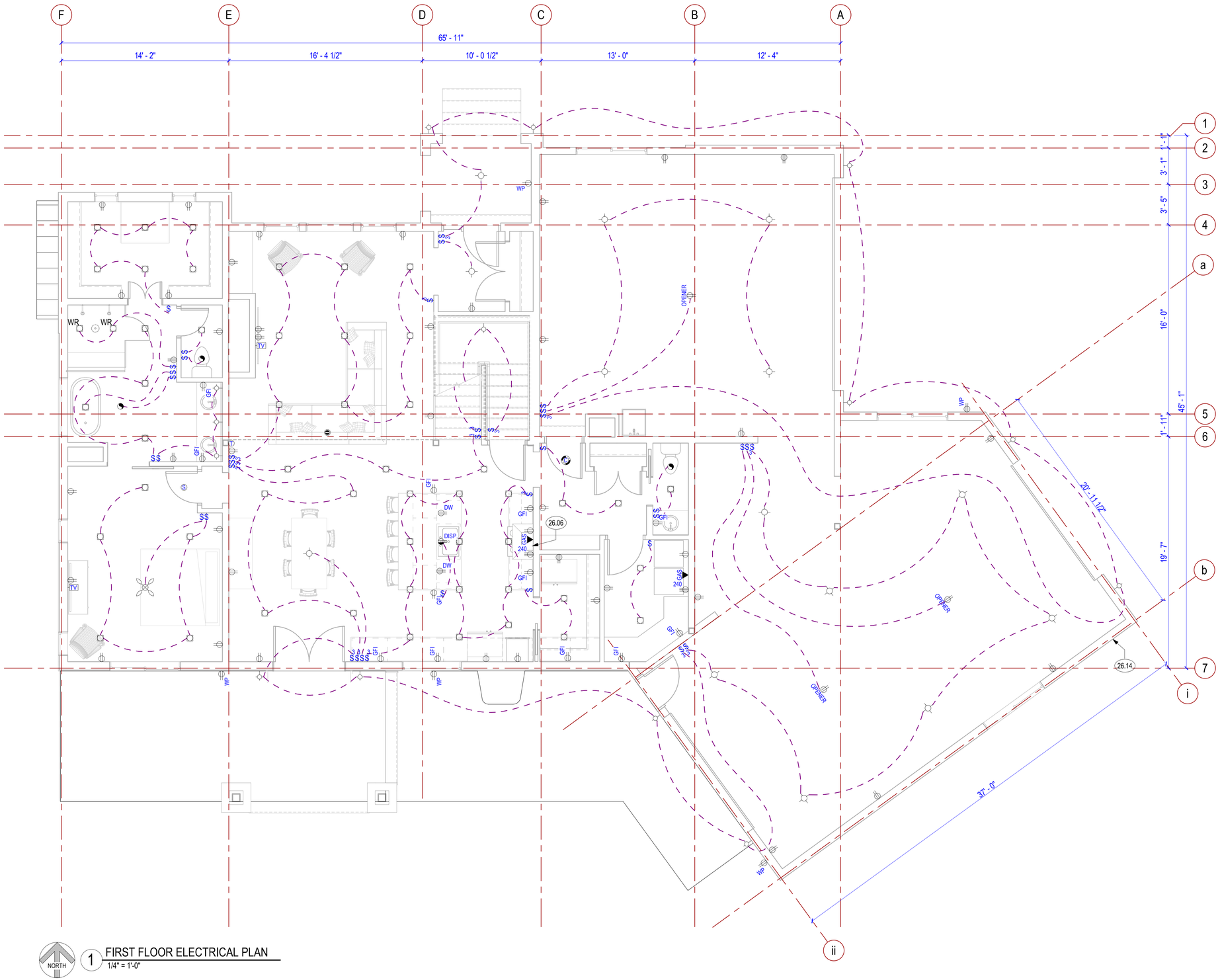

NORTH

1 FIRST FLOOR ELECTRICAL PLAN
1/4" = 1'-0"

ELECTRICAL LEGEND

	110V DUPLEX OUTLET	S	SWITCH
GFI	GFCI OUTLET	S3	SWITCH 3-WAY
WP	WEATHERPROOF GFCI OUTLET WITH WP COVER	T	THERMOSTAT
DW	DISHWASHER OUTLET		EXHAUST FAN
DISP	SWITCHED OUTLET FOR GARBAGE DISPOSAL	TV	TELEVISION JACK
240	240 V OUTLET	P	PHONE JACK
	FLOOR/SOFFIT OUTLET	GAS	GAS APPLIANCE HOOKUP
	LIGHT FIXTURE		CEILING FAN / LIGHT
	WALL-MOUNTED LIGHT FIXTURE	S	SMOKE DETECTOR
	CAN LIGHT FIXTURE		SMOKE & CARBON MONOXIDE DETECTOR
	FLOOD LIGHT FIXTURE		ELECTRICAL PANEL
	2'x4' LIGHT FIXTURE		EMERGENCY EXIT LIGHT
	2'x4' EMERGENCY LIGHT FIXTURE		PHOTOCELL
	2'x4' LIGHT FIXTURE - SURFACE MOUNTED		1'x4' LIGHT FIXTURE
OS	OCCUPANCY SENSOR	SPOT	SPOTLIGHT
	CATV	CH	CHIME
OPENER	GARAGE DOOR OPENER	CO-1	CARBON MONOXIDE SENSOR

0' 1' 2' 4' 8' 16'
GRAPHIC SCALE 1/4" = 1'-0"

Rev.	Description	Date	Appr.

Designed by: Designer
Drawn by: Author
Reviewed by: Checker
Submitted by: Approver
Submitted: 20 MAY 2021
File:
Scale: As indicated
Project Number: Project Number
REV:

Residence for Justin & Aimee Naylor

3441 Hidden Meadow Circle
Morgan, UT 84050

1ST FLOOR ELECTRICAL PLAN

SHEET NUMBER
E-101

PLOT DATE: 5/20/2021 9:32:51 PM

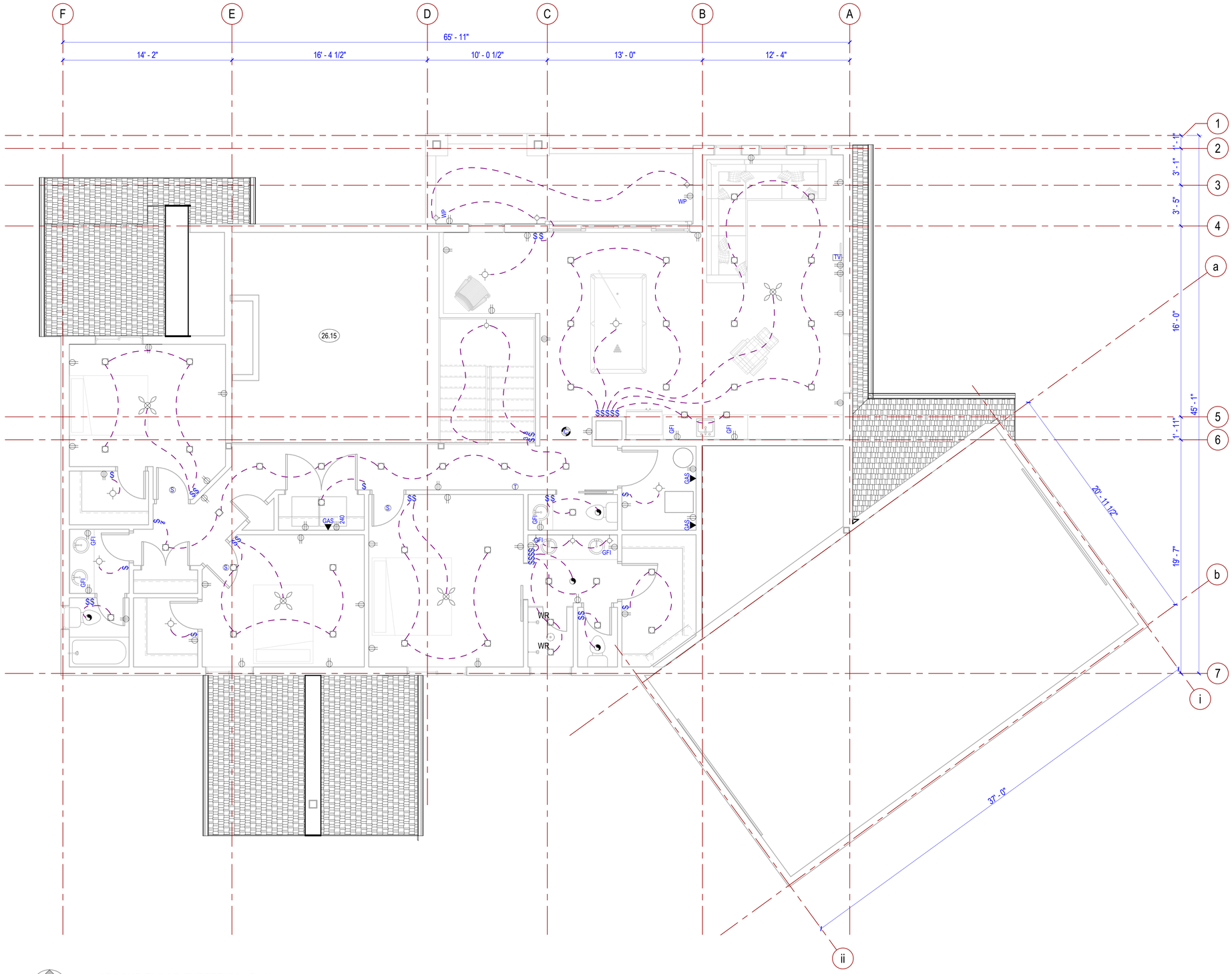

KEYED NOTES

26.15 SEE FIRST FLOOR ELECTRICAL PLAN FOR GREAT ROOM RECESSED LIGHTING

ELECTRICAL LEGEND

	110V DUPLEX OUTLET	S	SWITCH
GFI	GFCI OUTLET	S3	SWITCH 3-WAY
WP	WEATHERPROOF GFCI OUTLET WITH WP COVER	T	THERMOSTAT
DW	DISHWASHER OUTLET		EXHAUST FAN
DISP	SWITCHED OUTLET FOR GARBAGE DISPOSAL	TV	TELEVISION JACK
240	240 V OUTLET	P	PHONE JACK
	FLOOR/SOFFIT OUTLET	GAS	GAS APPLIANCE HOOKUP
	LIGHT FIXTURE		CEILING FAN / LIGHT
	WALL-MOUNTED LIGHT FIXTURE	S	SMOKE DETECTOR
	CAN LIGHT FIXTURE		SMOKE & CARBON MONOXIDE DETECTOR
	FLOOD LIGHT FIXTURE		ELECTRICAL PANEL
	2'x4' LIGHT FIXTURE		EMERGENCY EXIT LIGHT
	2'x4' EMERGENCY LIGHT FIXTURE		PHOTOCELL
	2'x4' LIGHT FIXTURE - SURFACE MOUNTED		1'x4' LIGHT FIXTURE
OS	OCCUPANCY SENSOR	SPOT	SPOTLIGHT
	CATV	CH	CHIME
OPENER	GARAGE DOOR OPENER	CO-1	CARBON MONOXIDE SENSOR

NORTH

1 SECOND FLOOR ELECTRICAL PLAN
1/4" = 1'-0"

0' 1' 2' 4' 8' 16'
GRAPHIC SCALE 1/4" = 1'-0"

Rev.	Description	Date	Appr.

REV:

Submitted: 20 MAY 2021
File:
Scale: As indicated
Project Number: Project Number

Designed by: Designer
Drawn by: Author
Reviewed by: Checker
Submitted by: Approver

Residence for Justin & Aimee Naylor

3441 Hidden Meadow Circle
Morgan, UT 84050

2ND FLOOR ELECTRICAL PLAN

SHEET NUMBER
E-102

PLOT DATE: 5/20/2021 9:32:53 PM