STRUCTURAL NOTES :

A. GENERAL

1. THE STRUCTURAL NOTES ARE INTENDED TO COMPLEMENT THE PROJECT SPECIFICATIONS WHICH ARE PART OF THE CONSTRUCTION DOCUMENTS. SPECIFIC NOTES AND DETAILS ON THE DRAWINGS SHALL GOVERN OVER THE STRUCTURAL NOTES AND TYPICAL DETAILS.
2. THESE DRAWINGS (AND, WHERE APPLICABLE, ACCOMPANYING WRITTEN SPECIFICATIONS) ARE THE ONLY CONTRACT DOCUMENTS PROVIDED BY ARW ENGINEERS FOR THE PROJECT REPRESENTED HEREIN. NOTHING IN ANY DIGITAL MODEL OR DIGITAL FILE RELATED TO THIS PROJECT SHALL BE TAKEN TO SUPERSEDE ANY INFORMATION SHOWN IN THESE DRAWINGS (INCLUDING, BUT NOT LIMITED TO, DIMENSIONS, SIZES, ETC).
3. THE ARCHITECTURAL DRAWINGS ARE THE PRIME CONTRACT DRAWINGS. THE STRUCTURAL DRAWINGS ARE SUPPLEMENTARY TO AND MUST BE USED IN CONJUNCTION WITH THE ARCHITECTURAL DRAWINGS AND OTHER CONSULTANTS DRAWINGS. ALL OMISSIONS OR CONFLICTS BETWEEN THE VARIOUS ELEMENTS OF THE WORKING DRAWINGS AND/OR SPECIFICATIONS SHALL BE BROUGHT TO THE ATTENTION OF THE ARCHITECT AND STRUCTURAL ENGINEER BEFORE PROCEEDING WITH ANY WORK INVOLVED. IN CASE OF CONFLICT, FOLLOW THE MOST STRINGENT REQUIREMENT AS DIRECTED BY THE ARCHITECT AT NO ADDITIONAL COST TO THE OWNER.
4. SEE SPECIFICATIONS FOR REQUIRED SUBMITTALS. SUBMITTALS SHALL BE MADE IN A TIMELY MANNER AS INDICATED IN SPECIFICATIONS. REVIEW OF SUBMITTALS BY ARW ENGINEERS IS FOR GENERAL COMPLIANCE ONLY AND IS NOT INTENDED AS APPROVAL. CONTRACTOR IS RESPONSIBLE FOR VERIFYING ALL SIZES, DIMENSIONS, AND ELEVATIONS ON SUBMITTALS AS RELATED TO DESIGN DOCUMENTS. PREPARATION OF SHOP DRAWINGS FOR STRUCTURAL ELEMENTS WILL REQUIRE INFORMATION (I.E. DIMENSIONS, ETC.) FOUND IN THE ARCHITECTURAL, STRUCTURAL, AND OTHER CONSULTANTS DRAWINGS.
5. THE CONTRACTOR SHALL VERIFY ALL CONDITIONS AND DIMENSIONS AT THE SITE. IF ACTUAL CONDITIONS DIFFER FROM THOSE SHOWN ON CONTRACT DOCUMENTS, CONTRACTOR SHALL NOTIFY ARCHITECT PRIOR TO FABRICATION OR CONSTRUCTION OF ANY AFFECTED ELEMENTS.
6. THE CONTRACTOR SHALL COORDINATE AND VERIFY ALL LOCATIONS AND SIZES OF MECHANICAL EQUIPMENT OR OTHER EQUIPMENT BEFORE FABRICATING AND ERECTING STRUCTURAL ELEMENTS. SIZES AND LOCATIONS THAT DIFFER FROM THOSE SHOWN ON THE CONTRACT DOCUMENTS SHALL BE REPORTED TO THE ARCHITECT.
7. THE CONTRACTOR SHALL SUBMIT A WRITTEN REQUEST TO THE ARCHITECT FOR ARCHITECT AND/OR ENGINEER APPROVAL BEFORE PROCEEDING WITH ANY CHANGES, MODIFICATIONS, OR SUBSTITUTIONS.
8. OBSERVATION VISITS TO THE SITE BY ARW ENGINEERS FIELD REPRESENTATIVES SHALL NEITHER BE CONSTRUED AS INSPECTION NOR APPROVAL OF CONSTRUCTION.
9. DURING AND AFTER CONSTRUCTION, BUILDER AND/OR OWNER SHALL KEEP LOADS ON STRUCTURE WITHIN THE LIMITS OF DESIGN LOADS AS NOTED IN THESE DOCUMENTS.
10. TYPICAL OR SIMILAR DETAILS AND SECTIONS SHALL APPLY WHERE SPECIFIC DETAILS ARE NOT SHOWN. TYPICAL OR SIMILAR DETAILS REFER TO THE CONDITION ADDRESSED AND ARE NOT NECESSARILY DETAILS LABELED "TYPICAL" OR "SIMILAR" IN THE PLANS AND DOCUMENTS.
11. DRAWINGS AND DETAILS HAVE BEEN PREPARED WITH THE INTENT TO VISUALLY REPRESENT INFORMATION PROVIDED IN SCALED FORM; HOWEVER CONTRACTOR/SUPPLIERS SHOULD NOT SCALE PLANS OR DETAILS FOR DIMENSIONAL INFORMATION.
12. THE CONTRACTOR SHALL PROVIDE ADEQUATE TEMPORARY SHORING AND BRACING FOR ALL STRUCTURAL ELEMENTS UNTIL THE ENTIRE STRUCTURAL SYSTEM IS COMPLETED. DESIGN OF ALL SHORING AND BRACING IS BY OTHERS AT NO ADDITIONAL COST TO THE OWNER.
13. ENGINEER SHALL NOT BE RESPONSIBLE FOR ACTIVITIES UNDER CONTROL OF THE CONTRACTOR SUCH AS CONSTRUCTION SITE SAFETY, MEANS, METHODS AND SEQUENCING OF CONSTRUCTION. ENGINEER SHALL NOT BE RESPONSIBLE FOR FABRICATION, ERECTION AND CONSTRUCTION REQUIREMENTS AS PRESCRIBED BY OSHA OR OTHER REGULATORY AGENCIES REGARDLESS OF INDICATIONS IN THESE DOCUMENTS.
14. NOTICE OF COPYRIGHT: THESE STRUCTURAL DRAWINGS ARE HEREBY COPYRIGHTED BY ARW ENGINEERS, ALL RIGHTS RESERVED. THESE DOCUMENTS DEFINE A STRUCTURE AND ARE INSTRUMENTS OF SERVICE, FOR ONE USE ONLY. REPRODUCTION AND DISTRIBUTION OF THESE DRAWINGS IS ONLY ALLOWED AS REQUIRED FOR REGULATORY AGENCIES AND FOR CONVEYANCE OF INFORMATION TO PARTIES INVOLVED IN THE CONSTRUCTION OF THIS PROJECT. THESE DOCUMENTS SHALL NOT BE REPRODUCED OR COPIED, IN PART OR WHOLE BY ANY PARTY FOR USE IN PREPARATION OF SHOP DRAWINGS OR OTHER SUBMITTALS.
15. WHERE THE WORD "SHALL" OCCURS IN THESE DRAWINGS AND ANY ACCOMPANYING SPECIFICATIONS, IT IS CONSIDERED A MANDATORY OBLIGATION AND SYNONYMOUS WITH THE PHRASE "HAS DUTY TO".

B. STATEMENT OF SPECIAL INSPECTIONS AND SPECIAL INSPECTIONS

1. THE DESIGNATED SEISMIC/WIND SYSTEMS AND SEISMIC/WIND-FORCE-RESISTING SYSTEMS THAT ARE SUBJECT TO SPECIAL INSPECTIONS IN ACCORDANCE WITH IBC SECTION 1705.11 AND 1705.12 ARE IDENTIFIED ON THESE DOCUMENTS WITH A CIRCLE "L". ALL OTHER ITEMS REQUIRING SPECIAL INSPECTION ARE IDENTIFIED IN THE SPECIAL INSPECTION SCHEDULE ON SHEET S003.
2. SPECIAL INSPECTIONS AND TESTING ARE TO BE PROVIDED AS REQUIRED BY IBC SECTIONS 1704 THROUGH 1705 AND OTHER APPLICABLE SECTIONS OF THE IBC. THE TYPE AND FREQUENCY OF TESTING AND SPECIAL INSPECTIONS SHALL BE AS NOTED IN THE SPECIAL INSPECTION SCHEDULE, JOB SPECIFICATIONS, AND ACCORDANCE WITH IBC SECTION 110 AND CHAPTER 17. CONTRACTOR SHALL COORDINATE AND COOPERATE WITH REQUIRED INSPECTIONS.
3. ALL TESTING AND SPECIAL INSPECTION SHALL BE PROVIDED BY A QUALIFIED INDEPENDENT SPECIAL INSPECTION AGENCY IN ACCORDANCE WITH IBC 1704 AND AS OUTLINED IN THE JOB SPECIFICATIONS. REPORTS OF FINDINGS OR DISCREPANCIES SHALL BE NOTED AND FORWARDED TO THE CONTRACTOR, ARCHITECT, ENGINEERS, AND BUILDING OFFICIAL IN A TIMELY MANNER.
4. STRUCTURAL OBSERVATION VISITS SHALL BE PERFORMED BY A REPRESENTATIVE FROM ARW ENGINEERS IN ACCORDANCE WITH THE CONTRACT AS NEEDED TO OBSERVE THE CONSTRUCTION OF CRITICAL BUILDING ELEMENTS (I.E. FOOTINGS, BRACED FRAMES, MOMENT FRAMES, DRAG STRUTS AND THEIR CONNECTIONS, COLLECTORS, AND ROOF AND FLOOR DIAPHRAGMS). STRUCTURAL OBSERVATION REPORTS FOR EACH VISIT SHALL BE SENT DIRECTLY TO THE ARCHITECT FOR DISTRIBUTION TO THE CONTRACTOR AND BUILDING OFFICIAL. STRUCTURAL OBSERVATION VISITS SHALL NEITHER BE CONSTRUED AS SPECIAL INSPECTION NOR APPROVAL OF COMPLETED CONSTRUCTION.
5. IN ACCORDANCE WITH IBC 1704.4, THE CONTRACTOR SHALL SUBMIT A WRITTEN CONTRACTOR'S STATEMENT OF RESPONSIBILITY TO THE BUILDING OFFICIAL AND OWNER. THE STATEMENT SHALL BE SUBMITTED PRIOR TO THE CONSTRUCTION OF ANY SEISMIC/WIND-FORCE-RESISTING SYSTEM, DESIGNATED SEISMIC/WIND SYSTEM, OR COMPONENT IDENTIFIED IN THESE DOCUMENTS WITH A CIRCLE "L".

C. BASIS OF DESIGN

1. GOVERNING BUILDING CODE : INTERNATIONAL BUILDING CODE (IBC) 2021
2. ROOF LOADS
   a. FLAT-ROOF SNOW LOAD, P_f: 25 PSF
      1. GROUND SNOW LOAD, P_g: 32 PSF
      2. SNOW EXPOSURE FACTOR, C_e: 1.0
      3. SNOW LOAD IMPORTANCE FACTOR, I_s: 1.1
      4. THERMAL FACTOR, C_t: 1.0
      5. SLOPE FACTOR, C_s : 1.0
      6. SNOW DRIFT : SHOWN ON PLANS WHERE APPLICABLE.
   b. LIVE LOAD = 20 PSF
   c. DEAD LOAD = 20 PSF
   d. RAIN INTENSITY, i : 2.01 IN/HR
3. WIND DESIGN
   a. BASIC WIND SPEED (3 SECOND GUST) : 109 MPH
   b. ALLOWABLE STRESS DESIGN WIND SPEED, V_{ASD} : 86 MPH
   c. WIND EXPOSURE : C
   d. INTERNAL PRESSURE COEFFICIENT, G_{CPI} : +/- 0.18
   e. COMPONENT AND CLADDING DESIGN WIND PRESSURE SHALL BE AS REQUIRED PER ASCE 7-16.
4. SEISMIC DESIGN :
   a. SEISMIC IMPORTANCE FACTOR, I_E : 1.25
   b. SITE CLASS : D
   c. MAPPED SPECTRAL RESPONSE ACCELERATIONS : $S_S = 0.713$, $S_1 = 0.256$
   d. SPECTRAL RESPONSE COEFFICIENTS : $S_{DS} = 0.584$, $S_{D1} = 0.358$
   e. SEISMIC DESIGN CATEGORY : D
   f. BASIC SEISMIC-FORCE-RESISTING SYSTEM : LIGHT-FRAME (WOOD) SHEAR WALLS
   g. SEISMIC RESPONSE COEFFICIENT, C_S : 0.103
   h. RESPONSE MODIFICATION FACTOR, R : 6.5
   i. ANALYSIS PROCEDURE : EQUIVALENT LATERAL FORCE

D. FOUNDATION

1. GENERAL
   a. DESIGN SOIL PRESSURE : 3000 PSF
   b. SOILS REPORT BY: AGEC APLIED GEOTECH
      REPORT #: 1220051
      DATED: MARCH 17, 2022
   c. SOIL PREPARATION UNDER FOOTINGS FOUNDATIONS AND SLAB-ON-GRADE, INCLUDING ANY NECESSARY SOIL IMPROVMENT METHODS SUCH AS RAMMED AGGREGATE PIERS SHALL BE PROVIDED. REFER TO THE SOILS REPORT FOR MORE INFORMATION.
   d. TOP OF FOOTING ELEVATIONS SHOWN ON THE FOOTING AND FOUNDATION PLAN ARE BASED ON PRELIMINARY GRADING INFORMATION AND SHALL BE VERIFIED PRIOR TO CONSTRUCTION. STEPS WHERE SHOWN ARE AT APPROXIMATE LOCATIONS. ACTUAL STEP LOCATIONS SHALL BE AT THE CONTRACTOR'S DISCRETION BASED UPON FIELD CONDITIONS. ALL EXTERIOR FOUNDATIONS SHALL BEAR A MINIMUM OF 30 INCHES BELOW LOWEST ADJACENT FINAL GRADE.
   e. ALL WALLS (EXCEPT CANTILEVERED RETAINING WALLS) SHALL BE ADEQUATELY BRACED AGAINST LATERAL MOVEMENT PRIOR TO BACKFILLING. DESIGN AND ERECTION OF BRACING/SHORING SHALL BE THE RESPONSIBILITY OF THE GENERAL CONTRACTOR. BRACING SHALL REMAIN IN PLACE UNTIL SUPPORTING STRUCTURAL ELEMENTS ARE IN PLACE AND HAVE ATTAINED FULL STRENGTH.
   f. UNLESS NOTED OTHERWISE, ALL FOOTINGS AT COLUMNS SHALL BE CENTERED BELOW COLUMNS.
   g. UNLESS NOTED OTHERWISE, ALL FOOTINGS SHALL HAVE VERTICAL FACES FORMED WITH STANDARD FORMING MATERIALS (WOOD, METAL, ETC.), WITH PRIOR APPROVAL OF ARCHITECT AND ENGINEER, CONCRETE FOR FOOTINGS CAN BE PLACED IN EXCAVATED SOIL "FORMS" PROVIDED THAT THE DIMENSIONS ARE INCREASED 3" ON ALL SIDE.

E. CONCRETE

1. ALL CONCRETE MIX DESIGNS SHALL COMPLY WITH THE PROJECT SPECIFICATIONS AND THE REQUIREMENTS LISTED BELOW :
   a. FOOTINGS, GRADE BEAMS, FOUNDATION WALLS :
      1. WHERE THE TOP OF THE ELEMENT IS EXPOSED OR IS LOCATED WITHIN 30" OF THE LOWEST ADJACENT GRADE (EXPOSURE CATEGORY F2) :
         a. 28 DAY COMPRESSIVE STRENGTH : 4500 PSI
         b. MAXIMUM W/C RATIO : 0.45
         c. MAXIMUM AGGREGATE SIZE : 1"
         d. AIR CONTENT : SEE SCHEDULE BELOW
      2. WHERE THE TOP OF THE ELEMENT IS NOT EXPOSED OR IS NOT LOCATED WITHIN 30" OF THE LOWEST ADJACENT GRADE (EXPOSURE CATEGORY F0) :
         a. 28 DAY COMPRESSIVE STRENGTH : 3000 PSI
   b. RETAINING WALLS (EXPOSURE CATEGORY F2) :
      1. 28 DAY COMPRESSIVE STRENGTH : 4500 PSI
      2. MAXIMUM W/C RATIO : 0.45
      3. MAXIMUM AGGREGATE SIZE : 1"
      4. AIR CONTENT : SEE SCHEDULE BELOW
   c. INTERIOR SLABS ON GRADE (EXPOSURE CATEGORY F0) :
      1. 28 DAY COMPRESSIVE STRENGTH : 3500 PSI
      2. MAXIMUM W/C RATIO : 0.5
   d. EXTERIOR SLABS (DOCKS, ETC.) (EXPOSURE CATEGORY F2) :
      1. 28 DAY COMPRESSIVE STRENGTH : 4500 PSI
      2. MAXIMUM W/C RATIO : 0.45
      3. MAXIMUM AGGREGATE SIZE : 1"
      4. MINIMUM AIR CONTENT : SEE SCHEDULE BELOW
   e. TOTAL AIR CONTENT FOR CONCRETE EXPOSED TO CYCLES OF FREEZING AND THAWING SHALL BE DETERMINED IN ACCORDANCE WITH THIS SCHEDULE. TOLERANCE ON AIR CONTENT AS DELIVERED SHALL BE +/- 1.5 PERCENT.

NOMINAL MAXIMUM AGGREGATE SIZE, IN.	TARGET AIR CONTENT, PERCENT F1	F2 AND F3
3/8	6	7.5
1/2	5.5	7
3/4	5	6
1	4.5	6
1-1/2	4.5	5.5
2	4	5
3	3.5	4.5

   f. ALL CEMENT TO BE TYPE V IN ALL CONCRETE MIXES DUE TO CORROSIVE NATURER OF SOILS, PER RECOMMENDATION OF SOILS ENGINEER.
2. WATER USED IN MIXING CONCRETE SHALL CONFORM TO ASTM C1602.
3. NO PIPES, DUCTS, SLEEVES, ETC. SHALL BE PLACED IN STRUCTURAL CONCRETE UNLESS SPECIFICALLY DETAILED OR APPROVED BY THE STRUCTURAL ENGINEER. NO ALUMINUM PRODUCTS SHALL BE EMBEDDED IN CONCRETE. PENETRATIONS THRU STRUCTURAL CONCRETE ELEMENTS MUST BE APPROVED BY THE ENGINEER AND SHALL BE BUILT INTO THE ELEMENT PRIOR TO CONCRETE PLACEMENT.
4. REFER TO ARCHITECTURAL DRAWINGS FOR MOLDS, GROOVES, ORNAMENTS, ETC. TO BE CAST IN TO CONCRETE, AND FOR EXTENT AND LOCATION OF DEPRESSIONS, CURBS, RAMPS, ETC.
5. UNLESS NOTED OTHERWISE, MINIMUM REINFORCING IN ALL CONCRETE FOUNDATION WALLS SHALL BE AS FOLLOWS:

THICKNESS	TOP & BOTTOM BARS	VERTICAL	HORIZONTAL
8"	(2) #5	#4 AT 18"O.C.	#4 AT 12"O.C.

6. UNLESS NOTED OTHERWISE, CONCRETE SLABS ON EARTH SHALL BE REINFORCED AS FOLLOWS:
   4" THICK - #3 AT 18"O.C. EACH WAY
   REINFORCING SHALL BE CONTINUOUSLY SUPPORTED AT 36"O.C. MAXIMUM SPACING.
7. UNLESS NOTED OTHERWISE, FOR NON-DETAILED OPENINGS IN CONCRETE WALLS LARGER THAN 12" AND SMALLER THAN 24" IN ANY DIRECTION ADD (2) #5 BARS ON ALL SIDES IN ADDITION TO REGULAR WALL REINFORCING AND EXTEND 24" EACH WAY BEYOND OPENING. IF 24" IS NOT AVAILABLE ON EVERY SIDE, NOTIFY STRUCTURAL ENGINEER FOR FURTHER DIRECTION. OPENINGS SHALL HAVE A MINIMUM OF 12" OF CONCRETE ABOVE THE OPENING, TYP.
8. CONSTRUCTION JOINTS NOT SHOWN ON THE PLANS SHALL BE MADE AND LOCATED SO AS TO NOT IMPAIR THE STRENGTH OF THE STRUCTURE AND AS APPROVED BY THE STRUCTURAL ENGINEER. PROVIDE 2 X 4 (SHAPED) KEYWAY IN ALL VERTICAL AND HORIZONTAL JOINTS UNLESS NOTED OR DETAILED OTHERWISE. ALL STEEL REINFORCING SHALL BE CONTINUOUS THROUGH COLD JOINTS UNLESS NOTED OTHERWISE. SEE TYPICAL DETAILS FOR COLD/CONSTRUCTION JOINTS FOR SLABS ON GRADE.
9. WHERE NEW CONCRETE IS PLACED AGAINST PREVIOUSLY HARDENED CONCRETE, THE JOINT SHALL BE CLEAN AND FREE OF LATANCE. IMMEDIATELY BEFORE NEW CONCRETE IS PLACED, CONSTRUCTION JOINTS SHALL BE PREWETTED AND STANDING WATER REMOVED. WHERE NOTED IN SPECIFIC DETAILS, HARDENED CONCRETE SHALL BE ROUGHENED TO 1/4" AMPLITUDE AND A BONDING AGENT SHALL BE APPLIED TO THE JOINT PRIOR TO PLACING NEW CONCRETE.

F. ANCHOR BOLTS/EMBEDDED BOLTS

1. ALL ANCHOR BOLTS SHALL HAVE ASTM A-563 HEAVY HEX NUT AND ASTM F-436 WASHERS AT STANDARD OR OVERSIZED HOLES PER AISC SPECIFICATION TABLE J3.3. WHERE HOLE SIZES DO NOT COMPLY WITH THE LIMITATIONS FOR OVERSIZED HOLES THE STRUCTURAL ENGINEER SHALL BE NOTIFIED TO DETERMINE STEEL PLATE WASHER REQUIREMENTS. ANCHOR BOLTS SHALL COMPLY WITH THE FOLLOWING :
   a. AT WOOD STUD WALLS - ASTM A-307 GRADE HEADED BOLTS. ANCHOR BOLTS IN TREATED LUMBER SHALL BE GALVANIZED OR STAINLESS STEEL. SEE TIMBER NOTES FOR MORE INFORMATION.
   b. AT ALL OTHER ANCHOR BOLTS (UNLESS NOTED OTHERWISE) - ASTM F1554 GRADE 36 HEADED BOLTS. (ASTM A36 THREADED ROD MAY BE USED WITH DOUBLE NUT AND WASHER.)
2. SEE TYPICAL ANCHOR BOLT DETAIL FOR DEFINITIONS OF EMBEDMENT LENGTH, ETC.
3. FURNISH TEMPLATES AND OTHER DEVICES AS NECESSARY FOR PRESETTING ALL BOLTS PRIOR TO PLACING CONCRETE AND/OR GROUT.
4. IF THREADED RODS ARE USED AS PERMITTED ABOVE, THEY SHALL BE CLEAR OF SOIL AND DIRT.
5. WHERE REQUIRED FOR ERECTION, HOLES LARGER THAN OVERSIZED MAY BE PERMITTED WITH THE USE OF STEEL PLATE WASHERS AT THE DISCRETION OF THE STRUCTURAL ENGINEER.

G. ADHESIVE/MECHANICAL ANCHORS

1. WITHOUT WRITTEN APPROVAL OF THE ENGINEER, CONTRACTOR SHALL NOT SUBSTITUTE POST-INSTALLED ANCHORS WHERE CAST-IN-PLACE ANCHORS ARE SPECIFIED IN THE DRAWINGS.
2. WHERE STRUCTURAL DETAILS SPECIFY SPECIFIC BRANDS AND/OR TYPES OF ADHESIVES OR ANCHORS, SUBSTITUTIONS OF OTHER BRANDS AND/OR TYPES IS NOT ALLOWED, WITHOUT WRITTEN APPROVAL OF THE ENGINEER.
3. SUBSTITUTION REQUESTS FOR ALTERNATE PRODUCTS SHALL BE APPROVED IN WRITING BY THE STRUCTURAL ENGINEER OF RECORD PRIOR TO USE. SUBSTITUTION REQUESTS SHALL INCLUDE AN ICC ESR OR IAPMO REPORT AND SUPPORTING CALCULATIONS INDICATING COMPLIANCE WITH DESIGN INTENT.
4. ALL ADHESIVE/MECHANICAL ANCHORS SHALL BE INSTALLED, INCLUDING HOLE DRILLING AND PREPARATION, IN ACCORDANCE WITH AN APPROVED INDEPENDENT EVALUATION REPORT (ICC-ES, IAPMO, OR APPROVED EQUAL), AS INDICATED BELOW, AND IN ACCORDANCE WITH ALL MANUFACTURER'S PRINTED INSTALLATION INSTRUCTIONS (MPII).
5. INSTALLERS SHALL BE, AT A MINIMUM, TRAINED FOR THE SPECIFIC APPLICATION INSTALLATION TECHNIQUE FOR THE SPECIFIC PRODUCT BY THE PRODUCT MANUFACTURERS FIELD EMPLOYEE OR SHALL POSSESS A TRAINING CARD OBTAINED BY THE MANUFACTURERS ONLINE TRAINING PROGRAM.
6. ADHESIVE ANCHORS SHALL BE INSTALLED IN CONCRETE HAVING A MINIMUM AGE OF 21 DAYS AT TIME OF ANCHOR INSTALLATION. ADHESIVE ANCHORS SHALL NOT BE FULLY LOADED UNTIL CONCRETE HAS REACHED DESIGN STRENGTH.
7. ADHESIVE ANCHORS SHALL CONSIST OF REINFORCING BAR OR THREADED RODS AS INDICATED IN THESE DOCUMENTS.
8. UNLESS APPROVED BY THE ENGINEER OF RECORD, CONCRETE AND DRILLED ANCHOR HOLES SHALL BE DRY AND FREE OF WATER FOR 14 DAYS PRIOR TO ADHESIVE INSTALLATION. CONTACT THE ENGINEER OF RECORD FOR GUIDANCE IF THE CONTRACTOR CHOOSES TO INSTALL IN DAMP, WATER-SATURATED, OR WATER-FILLED HOLES.
9. CONCRETE TEMPERATURE AT THE TIME OF INSTALLATION SHALL BE MONITORED BY THE CONTRACTOR. CONTRACTOR SHALL COMPLY WITH ALL MANUFACTURER'S PRINTED INSTALLATION INSTRUCTIONS (MPII) RELATIVE TO SUBSTRATE TEMPERATURE.
10. INSTALLATION OF ADHESIVE ANCHORS HORIZONTALLY OR UPWARDLY INCLINED TO SUPPORT SUSTAINED TENSION LOADS SHALL BE PERFORMED BY PERSONNEL CERTIFIED BY AN APPLICABLE CERTIFICATION PROGRAM. CERTIFICATION SHALL INCLUDE WRITTEN AND PERFORMANCE TESTS IN ACCORDANCE WITH THE ACI/CRSI ADHESIVE ANCHOR INSTALLER CERTIFICATION PROGRAM, OR EQUIVALENT. IN ACCORDANCE WITH ACI 318-11 D.9.2.2. PROOF OF CURRENT CERTIFICATION SHALL BE SUBMITTED TO THE ENGINEER FOR APPROVAL PRIOR TO INSTALLATION. CONTINUOUS SPECIAL INSPECTION SHALL BE PROVIDED FOR THESE ANCHORS.
11. UNLESS NOTED OTHERWISE, ALL ADHESIVE ANCHORS INTO CONCRETE SHALL BE:
    a. HILTI HIT-RE 500V3 (ESR-3814), OR HILTI HIT-HY 200-A (ESR-3187).
    b. SIMPSON SET-3G (ESR-4057), OR AT-XP (ESR-0263).
    c. DEWALT PURE 110+ (ESR-3298), OR AC200+ GOLD (ESR-4027-COLD WEATHER).
12. UNLESS NOTED OTHER WISE, ALL MECHANICAL ANCHORS INTO CONCRETE SHALL BE:
    a. HILTI KWIK BOLT-TZ2 (ESR-4266).
    b. SIMPSON STRONG-BOLT 2 (ESR-3037).
13. UNLESS NOTED OTHERWISE, ALL SCREW ANCHORS INTO CONCRETE SHALL BE:
    a. SIMPSON TITEN HD (ESR-2713).
    b. DEWALT SCREWBOLT+ (ESR-3889).
    c. HILTI KWIK HUS-EZ (ESR-3027).
14. THE TESTING LABORATORY WILL PERFORM VISUAL INSPECTION OF ANCHORS AND DOWELS AS SPECIFIED IN THE SPECIAL INSPECTION SCHEDULE AND THE APPROVED INDEPENDENT EVALUATION REPORT. TENSION TESTING CAN BE REQUIRED AT THE DIRECTION OF THE STRUCTURAL ENGINEER OF RECORD OR THE SPECIAL INSPECTOR.
15. IF REINFORCEMENT IS ENCOUNTERED DURING DRILLING, ABANDON THAT HOLE AND SHIFT THE ANCHOR LOCATION TO AVOID THE REINFORCEMENT. PROVIDE A MINIMUM SPACE OF (2) ANCHOR HOLE DIAMETERS OR 2 INCHES, WHICH EVER IS LARGER, OF SOUND CONCRETE/MASONRY BETWEEN THE ANCHOR AND THE ABANDONED HOLE. FILL THE ABANDONED HOLE WITH NON-SHRINK GROUT OR AN APPROVED ANCHORING ADHESIVE. AT CONTRACTORS OPTION, LOCATE EXISTING REINFORCEMENT PRIOR TO DRILLING/CORING. IF THE ANCHOR OR DOWEL CANNOT BE SHIFTED AS NOTED ABOVE, THE ENGINEER WILL DETERMINE A NEW LOCATION.
16. LOCATE REINFORCEMENT AND CONFIRM FINAL ANCHOR LOCATIONS PRIOR TO FABRICATING PLATES, MEMBERS, OR OTHER STEEL ASSEMBLIES ATTACHED WITH MECHANICAL ANCHORS.

LEGEND OF SYMBOLS AND ABBREVIATIONS

AB = ANCHOR BOLT
ABV = ABOVE
ARCH = ARCHITECT
BLW = BELOW
BN = BOUNDARY NAILING
BS = BOUNDARY SCREW
BRB = BUCKLING RESTRAINED BRACE
BRBF = BUCKLING RESTRAINED BRACE FRAME
CJP = COMPLETE JOINT PENETRATION
CL = CENTERLINE
CMU = CONCRETE MASONRY UNIT
COL = COLUMN
CONC = CONCRETE
CP = CONCRETE PIER
DC = DEMAND CRITICAL
DIA / Ø = DIAMETER
DBA = DEFORMED BAR ANCHOR
DBE = DECK BEARING ELEVATION
ELEV = ELEVATION
EN = EDGE NAILING
EOD = EDGE OF DECK
FDN = FOUNDATION
FTG = FOOTING
FFE = FINISHED FLOOR ELEVATION
GB = CONCRETE GRADE BEAM
HSA = HEADED STUD ANCHOR
JBE = JOIST BEARING ELEVATION
KB = KICKER BRACE
MAX = MAXIMUM
MB = MASONRY BEAM
MC = MASONRY COLUMN
MECH = MECHANICAL
MEZZ = MEZZANINE
MIN = MINIMUM
MJ = MASONRY JAMB
MW = MASONRY WALL
NS, FS = NEAR SIDE, FAR SIDE
OAE = OR APPROVED EQUAL
OPP = OPPOSITE
PAF = POWDER ACTUATED FASTENER
PL = PLATE
REINF = REINFORCING
REQ'D = REQUIRED
SIM = SIMILAR
SSH = STEEL STUD HEADER
SSJ = STEEL STUD JAMB
SSS = STEEL STUD SILL
SSW = STEEL STUD WALL
TOB = TOP OF BEAM ELEVATION
TOC = TOP OF CONCRETE SLAB
TOF = TOP OF FOOTING
TOG = TOP OF GIRDER ELEVATION
TOM = TOP OF MASONRY
TOS = TOP OF STEEL ELEVATION
TYP = TYPICAL
UNO = UNLESS NOTED OTHERWISE

FOOTING MARK
TOP OF FOOTING ELEVATION
SECTION MARK
SHEET NUMBER
TOP OF FOUNDATION WALL OR COLUMN PIER ELEVATION
SHEAR WALL - SEE SCHEDULE
MIN. LENGTH OF SHEAR WALL
S — S FOOTING STEP
DEPRESS FDN./WALL AND POUR FLOOR SLAB OVER AT CONCRETE FOUNDATION WALL
WOOD HEADER
HD - SIMPSON HOLDOWN SIZE
ELEVATION
L FRAMING ANGLE SEE TYPICAL DETAIL
C FRAMING CHANNEL SEE TYPICAL DETAIL
L ITEMS, DETAILS, & SYSTEMS WHICH ARE PART OF THE LATERAL FORCE RESISTING SYSTEM.
KB KICKER BRACE
SNOW DRIFT LOCATION

Structural Sheet Index

bhd ARCHITECTS
www.bhdarchitects.com
Phone 801.571.0010
Fax 801.571.0303
Toll Free 888.571.0010
65 East Wadsworth Park Drive
Suite 205 Draper, Utah 84020

Matthew C. McBride No. 353993 3/20/24

ARW ENGINEERS
154 W. Civic Circle Logan, Utah 84321
p 435.752.1555 www.arwengineers.com

THE CHURCH OF JESUS CHRIST OF LATTER-DAY SAINTS

Tooele UT Deseret Peak Sr Seminary

Approximately 2734 North Berra Boulevard, Tooele, Utah
40.569694, -112.303347

Date: 3 Apr 2024
BHD #: 2326
County Parcel: 02-143-0-0115
Plan Series: Custom 5 CR
Owner #: 501-3450

Sheet Issue and Revision Schedule

#	Date	Description
1	3 Apr 2024	Bid Documents

Structural Notes

S001

STRUCTURAL NOTES CONTINUED :

H. REINFORCING STEEL

1. REINFORCING BAR STRENGTH REQUIREMENTS:
   a. ALL REINFORCING BARS, SHALL CONFORM TO ASTM STANDARD A-615 GRADE 60 AND ALL WELDED WIRE FABRIC SHALL CONFORM TO ASTM STANDARD A-1064 AND SHALL BE SUPPLIED IN FLAT SHEETS. ADEQUATELY TIE AND SUPPORT ALL REINFORCING STEEL AS SPECIFIED BY ACI 117, TO MAINTAIN EXACT REQUIRED POSITION.
2. HEADED SHEAR STUD ASSEMBLIES SHALL CONFORM TO ASTM A1044.
3. STEEL DISCONTINUOUS FIBER REINFORCEMENT SHALL BE DEFORMED AND CONFORM TO ASTM A820 AND SHALL HAVE A LENGTH TO DIAMETER RATIO NOT SMALLER THAN 50 AND NOT GREATER THAN 100.
4. HEADED DEFORMED BARS SHALL CONFORM TO ASTM A970. OBSTRUCTIONS OR INTERRUPTIONS OF THE BAR DEFORMATIONS, IF ANY, SHALL NOT EXTEND MORE THAN 2 BAR DIAMETERS FROM THE BEARING FACE OF THE HEAD.
5. ALL REINFORCING STEEL SHALL BE TIED IN PLACE AND ADEQUATELY SUPPORTED PRIOR TO PLACING CONCRETE. WET STABBING OF ANY REINFORCING STEEL IS NOT PERMITTED, UNLESS SPECIFICALLY DETAILED OTHERWISE OR APPROVED BY THE ENGINEER.
6. ALL FIELD BENT DOWELS SHALL BE GRADE 40 WITH SPACING INDICATED REDUCED BY 1/3.
7. UNLESS NOTED OTHERWISE, REINFORCEMENT SHALL HAVE THE FOLLOWING CONCRETE COVERAGE :
   a. CAST AGAINST AND PERMANENTLY EXPOSED TO EARTH ..... 3"
   b. EXPOSED TO EARTH OR WEATHER :
      1. #6 & LARGER ..... 2"
      2. #5 & SMALLER ..... 1-1/2"
   c. NOT EXPOSED TO WEATHER OR EARTH :
      1. SLABS, WALLS, JOISTS, #11 & SMALLER ..... 3/4"
      2. BEAMS, COLUMNS: MAIN REINFORCING OR TIES ..... 1-1/2"
   d. SLAB ON GRADE :
      1. PLACE REINFORCING AT CENTER OF SLAB UNLESS INDICATED OTHERWISE.
8. EXCEPT WHERE NOTED ON PLANS OR DETAILS CONTINUOUS REINFORCEMENT SHALL BE SPLICED AT POINTS OF MINIMUM STRESS BY LAPPING PER THE REBAR LAP SCHEDULE.
9. REINFORCING STEEL MAY BE SPLICED WITH MECHANICAL COUPLERS THAT HAVE A TENSION CAPACITY OF AT LEAST 125% OF THE STRENGTH OF THE BAR. MECHANICAL COUPLERS SHALL BE A POSITIVE CONNECTING TYPE COUPLER, AND SHALL BE INSTALLED IN ACCORDANCE WITH AN APPROVED ICC RESEARCH REPORT. WHERE THESE ARE USED, SPLICES ON ADJACENT BARS SHALL BE STAGGERED AT LEAST 24 INCHES ALONG THE LENGTH OF THE BARS.
10. ALL VERTICAL REINFORCING IN STRUCTURAL ELEMENTS ABOVE SHALL BE SPLICED WITH MATCHING DOWELS EMBEDDED WITHIN THE FOOTINGS OR STRUCTURE BELOW. SPLICE LENGTHS SHALL COMPLY WITH REBAR LAP SCHEDULE. DOWELS INTO FOOTINGS SHALL TERMINATE WITH A STANDARD HOOK, AND SHALL EXTEND TO WITHIN 4" OF THE BOTTOM OF THE FOOTING, BUT NEED NOT EXTEND MORE THAN 20" INTO FOOTING.
11. DO NOT WELD REINFORCING EXCEPT AS NOTED ON PLANS, WHERE REINFORCING IS WELDED, USE ASTM A-706 REINFORCING.
12. REINFORCING BARS, TIES, AND TENDONS SHALL BE SUPPORTED BY NYLON CONES, PLASTIC-COATED TIE-WIRES, OR PLASTIC-COATED CHAIRS. REINFORCING IN FOOTINGS IS PERMITTED TO BE SUPPORTED ON CONCRETE DOBIES.
13. UNLESS NOTED OTHERWISE, HOOKS, STIRRUPS, TIES, AND OTHER BENDS IN REINFORCING STEEL SHALL MEET THE STANDARDS SET FORTH IN ACI 318/318R-14. UNLESS OTHERWISE PERMITTED BY THE ENGINEER, ALL REINFORCEMENT SHALL BE BENT COLD. REINFORCEMENT PARTIALLY EMBEDDED IN CONCRETE SHALL NOT BE FIELD BENT, EXCEPT AS SHOWN ON THESE DRAWINGS OR OTHERWISE PERMITTED BY THE ENGINEER.
14. UNLESS SPECIFICALLY NOTED AND/OR DETAILED IN THE STRUCTURAL DRAWINGS CONDUIT SHALL NOT BE IN CONTACT WITH REINFORCING STEEL.

I. TIMBER

1. WOOD GRADES (UNLESS NOTED OTHERWISE)
   a. ALL FRAMING LUMBER SHALL BE DOUGLAS FIR/LARCH CLEARLY MARKED WITH A STAMP BY WWPA APPROVED AGENCY AND SHALL BE GRADED AS FOLLOWS:
      1. HORIZONTAL MEMBERS: JOISTS & RAFTERS: NO. 2, BEAMS & STRINGERS: NO. 2.
      2. VERTICAL MEMBERS: POST & TRIMMERS: NO. 1, STUDS: NO. 2.
   b. ALL FRAMING IN CONTACT WITH FOOTINGS, FOUNDATIONS OR SLABS ON GRADE SHALL BE PRESSURE TREATED OR TIMBERSTRAND LSL TREATED LUMBER WITH EQUIVALENT STRESS GRADES TO TYPICAL FRAMING MEMBERS.
   c. GLU-LAMINATED BEAMS SHALL BE DOUGLAS-FIR ARCHITECTURAL APPEARANCE GRADE WITH A COMBINATION NUMBER 24F-V4 EXCEPT CANTILEVERED AND CONTINUOUS BEAMS SHALL BE COMBINATION NUMBER 24F-V8.
   d. UNLESS NOTED OTHERWISE, ALL ENGINEERED LUMBER SHALL BE FURNISHED BY TRUS-JOIST CORPORATION OR APPROVED EQUAL AND SHALL HAVE THE FOLLOWING MINIMUM PROPERTIES :

	MODULUS OF ELASTICITY	FLEXURAL STRESS RATING
LVL :	2,000,000 PSI	2,600 PSI
PSL :	2,000,000 PSI	2,900 PSI
LSL :	1,500,000 PSI	2,250 PSI

   e. ALL WOOD "I" JOISTS AND BRIDGING SHALL BE FURNISHED BY TRUS-JOIST CORPORATION OR APPROVED EQUAL.
2. SHEATHING SHALL BE APA RATED SHEATHING, EXPOSURE I, EXTERIOR GLUE AND PANEL INDEX RATING AS NOTED BELOW UNLESS NOTED OTHERWISE :

LOCATION	THICKNESS	PANEL INDEX
WALLS :	15/32"	24/0
ROOFS :	23/32" CDX	32/16

3. INDIVIDUAL PIECES OF SHEATHING AT ROOF AND SHEAR WALLS SHALL NOT BE SMALLER THAN 24" IN EITHER DIRECTION AND SHALL SPAN A MINIMUM OF TWO FRAMING SPACES, UNO.
4. CONNECTIONS, FASTENERS, AND ADHESIVE
   a. ALL BOLTS THRU WOOD SHALL BE ASTM A307 AND SHALL HAVE HARDENED WASHERS UNDER ASTM A563 HEAVY HEX NUT AND BOLT HEADS.
   b. UNLESS NOTED OTHERWISE, 10d COMMON (0.148) NAILS SHALL BE USED TO FASTEN ALL PLYWOOD ROOF SHEATHING TO SUPPORTING TRUSSES, JOISTS, LEDGERS OR BLOCKING AS FOLLOWS:
      1. BOUNDARY NAILING "BN" : 4"O.C. AT ALL BEARING WALLS, SHEAR WALLS, BLOCKING, AND WHERE OTHERWISE INDICATED IN THE STRUCTURAL DRAWINGS.
      2. PANEL EDGE NAILING "EN": 6"O.C. AT ALL OTHER PLYWOOD PANEL EDGES.
      3. PANEL FIELD NAILING "FN": 12"O.C. AT INTERIOR SUPPORTS IN FIELD OF PANEL.
   c. UNLESS NOTED OTHERWISE IN THE WOOD SHEAR WALL SCHEDULE ON SHEET S004, 10d COMMON (0.131) NAILS SHALL BE USED TO FASTEN ALL PLYWOOD SHEAR WALL SHEATHING TO STUDS AND BLOCKING AS FOLLOWS:
      1. PANEL EDGE NAILING "EN": 6"O.C.
      2. PANEL FIELD NAILING "FN": 12"O.C. AT INTERIOR SUPPORTS IN FIELD OF PANEL.
   d. NAILS SHALL BE GALVANIZED OR STAINLESS STEEL AT EXPOSED LOCATIONS OR IN TREATED WOOD (SEE NOTE BELOW FOR FASTENERS CONNECTED TO OR IN CONTACT WITH TREATED WOOD). THE HEAD OF ALL NAILS SHALL BE DRIVEN FLUSH WITH THE SURFACE OF THE SHEATHING.
   e. UNLESS NOTED OTHERWISE, ALL NAILS SHALL HAVE THE FOLLOWING MINIMUM PROPERTIES :

COMMON NAIL SIZE	SHANK DIAMETER	HEAD DIAMETER	LENGTH	MIN. PENETRATION INTO SUPPORT MEMBER
6d	0.113"	0.266"	2"	1.25"
8d	0.131"	0.281"	2-1/2"	1.375"
10d	0.148"	0.312"	3"	1.50"
12d	0.148"	0.312"	3-1/4"	1.50"
16d	0.162"	0.344"	3-1/2"	1.62"

   f. A CONTINUOUS BEAD OF PERMANENT BOND TIMBER/WOOD ADHESIVE COMPOUND SHALL BE USED TO FASTEN ALL PLYWOOD FLOOR SHEATHING TO FLOOR JOISTS IN ACCORDANCE WITH MANUFACTURERS' SPECIFICATIONS.
   g. ALL FRAMING ANCHORS, POST CAPS, HOLD DOWNS, COLUMN BASES ETC. TO BE PROVIDED BY SIMPSON OR APPROVED EQUAL AND SHALL BE ATTACHED IN ACCORDANCE WITH MANUFACTURER'S PUBLISHED DATA, UNLESS NOTED OTHERWISE.
   h. UNLESS NOTED OTHERWISE, ALL WALL BOTTOM PLATES TO BE ANCHORED TO FOUNDATIONS OR FOOTINGS PER THE WOOD SHEAR WALL SCHEDULE. THERE SHALL BE A MINIMUM OF (2) ANCHOR BOLTS PER PLATE WITH ONE BOLT LOCATED NOT MORE THAN 12" AND NOT LESS THAN 4" FROM EACH END OF EACH PIECE.
   i. WALL BOTTOM PLATES AT SHEAR WALLS SHALL INCLUDE 1/4" x 3" x 3" STEEL PLATE WASHERS BETWEEN THE SILL PLATE AND NUT OF THE ANCHOR BOLT. THE HOLE IN THE PLATE WASHER IS PERMITTED TO BE DIAGONALLY SLOTTED WITH A WIDTH UP TO 3/16" LARGER THAN THE BOLT DIAMETER AND SLOT LENGTH NOT TO EXCEED 1-3/4", PROVIDED A STANDARD CUT WASHER IS PLACED BETWEEN THE PLATE WASHER AND THE NUT. THE PLATE WASHER SHALL EXTEND TO WITHIN ½" OF THE EDGE OF THE BOTTOM PLATE ON THE SHEATHED SIDE.
   j. FASTENERS CONNECTED TO OR IN CONTACT WITH PRESERVATIVE-TREATED AND/OR FIRE-RETARDANT-TREATED WOOD (EXCEPT FOR TIMBERSTRAND LSL TREATED LUMBER AND BORATE BASED TREATMENTS) SHALL BE OF G-185 HOT-DIP GALVANIZED STEEL OR 304 OR 316 STAINLESS STEEL. STAINLESS STEEL AND GALVANIZED STEEL SHALL NEVER BE USED IN CONTACT WITH EACH OTHER.
   k. EXCEPT WHERE NOTED OTHERWISE, THE NUMBER AND SIZE OF NAILS CONNECTING WOOD MEMBERS SHALL NOT BE LESS THAN THAT SET FORTH IN IBC TABLE 2304.10.1. CONNECTIONS FOR MULTIPLE PIECES OF ENGINEERED LUMBER PIECES SHALL BE IN ACCORDANCE WITH THE MANUFACTURERS SPECIFICATIONS.
5. ALL METAL-PLATE-CONNECTED WOOD TRUSSED RAFTERS SHALL BE FABRICATED IN COMPLIANCE WITH THE RESEARCH COMMITTEE RECOMMENDATIONS OF THE ICC FOR THE CONNECTOR PLATES USED. SUBMIT DESIGN CALCULATIONS WITH ENGINEERS SEAL FOR REVIEW WITH SHOP DRAWINGS. PROVIDE CALCULATIONS AND DETAILS FOR ALL TRUSS TO TRUSS CONNECTIONS INCLUDING CONNECTION HARDWARE. ALL NECESSARY TRUSS BRIDGING AND CONNECTION DESIGN OF TRUSS BRIDGING SHALL BE PROVIDED BY THE TRUSS DESIGNER AND SHALL BE INCLUDED IN THE DESIGN CALCULATIONS FOR REVIEW.
6. INSTALLATION OF ALL METAL-PLATE-CONNECTED WOOD TRUSSES SHALL COMPLY WITH THE FOLLOWING STANDARDS :
   a. ANSI/TPI 1 "NATIONAL DESIGN STANDARD FOR METAL-PLATE-CONNECTED WOOD TRUSSES".
   b. TPI HIB "COMMENTARY AND RECOMMENDATIONS FOR HANDLING INSTALLING & BRACING METAL-PLATE-CONNECTED WOOD TRUSSES".
   c. TPI DSB "RECOMMENDED DESIGN SPECIFICATION FOR TEMPORARY BRACING OF METAL-PLATE-CONNECTED WOOD TRUSSES".
7. UNLESS NOTED OTHERWISE, ALL ROOF SHEATHING AND WALL SHEATHING AT SHEAR WALLS SHALL HAVE SOLID BLOCKING AT ALL PANEL EDGES.
8. PROVIDE DOUBLE JOIST UNDER PARALLEL NONBEARING WALLS AND SOLID BLOCKING UNDER PERPENDICULAR NONBEARING WALLS.
9. AT ALL OVERBUILD LOCATIONS, ROOF SHEATHING SHALL BE COMPLETE BELOW OVERBUILDS PRIOR TO OVERBUILD CONSTRUCTION.
10. PROVIDE SOLID 2" (NOMINAL) FULL DEPTH BLOCKING AT ENDS AND SUPPORT LOCATIONS FOR ALL JOISTS AND RAFTERS. BLOCKING SHALL BE ATTACHED TO SUPPORT FRAMING WITH A MINIMUM OF (1) SIMPSON A35 FRAMING ANCHOR BETWEEN JOISTS UNLESS NOTED OTHERWISE.
11. UNLESS NOTED OTHERWISE, ALL BEARING WALLS SHALL BE FRAMED PER THE WOOD FRAMING NOTES. BLOCK ALL NON-SHEATHED BEARING WALLS AT 4'-0"O.C.
12. VERIFY THE STUD SPACING WITH THE ANCHOR BOLT LAY-OUT. WHERE STUDS INTERFERE WITH ANCHOR BOLTS, PROVIDE AN ADDITIONAL FULL-HEIGHT STUD TO ENSURE THAT THE FULL CROSS-SECTIONAL AREA OF THE STUD IS IN CONTACT WITH THE SILL PLATE.
13. UNLESS NOTED OTHERWISE, ALL EXTERIOR WALLS AND SHEAR WALLS SHALL HAVE DOUBLE 2X TOP PLATES THAT ARE SPLICED TOGETHER PER THE WOOD FRAMING NOTES.
14. UNLESS NOTED OTHERWISE, ALL HORIZONTAL FRAMING MEMBERS SHALL BE INSTALLED WITH THE NATURAL CROWN UP.
15. GLULAM MEMBERS
   a. GLULAM MEMBERS SHALL BE PROTECTED FROM EXTREMES IN TEMPERATURE AND HUMIDITY DURING TRANSPORTATION, STORAGE AND INSTALLATION WITH GOOD STORAGE AND INSTALLATION PRACTICES THAT MINIMIZE DIRECT EXPOSURE TO THE ELEMENTS.
   b. DURING AND AFTER INSTALLATION, GLULAM MEMBERS SHALL NOT BE EXPOSED TO RAPID MOVEMENT OF AIR OR TO CONCENTRATED HEATING AND COOLING SOURCES.
   c. GLULAM MEMBERS SHALL BE ALLOWED TO ADJUST SLOWLY TO THE AMBIENT TEMPERATURE AND HUMIDITY OF THE BUILDING BY AVOIDING RAPID LOWERING OF THE HUMIDITY AND/OR EXPOSURE TO HIGH TEMPERATURES.
   d. GLULAM MEMBERS SHALL BE PROTECTED AS INDICATED IN THESE NOTES UNLESS OTHERWISE NOTED BY THE GLULAM MANUFACTURER.

J. STRUCTURAL DELEGATED DESIGNS AND DEFERRED SUBMITTALS

1. STRUCTURAL DELEGATED DESIGNS AND SUBSEQUENT DEFERRED SUBMITTALS ARE FOR ELEMENTS, PARTS, OR PORTIONS OF THE OVERALL STRUCTURAL SYSTEM THAT ARE INDICATED OR REFERRED TO ON THESE DRAWINGS AND THAT ARE CRITICAL TO THE PERFORMANCE OF THE OVERALL STRUCTURAL SYSTEM. DESIGN CRITERIA HAS BEEN PROVIDED FOR THESE ITEMS IN THE STRUCTURAL NOTES, PLANS, AND DETAILS.
2. STRUCTURAL DEFERRED SUBMITTALS ARE COMPLETE PACKAGES TO BE SUBMITTED FOR REVIEW THAT INCLUDE DRAWINGS AND CALCULATIONS FOR ALL DELEGATED DESIGN ITEMS AND THEIR CONNECTIONS. DEFERRED SUBMITTALS SHALL BEAR THE STAMP AND SIGNATURE OF THE DESIGN PROFESSIONAL RESPONSIBLE FOR THEIR DESIGN.
3. ARW ENGINEERS WILL REVIEW STRUCTURAL DEFERRED SUBMITTALS TO VERIFY DESIGN CRITERIA IS COMPLIANT WITH THE APPROVED CONSTRUCTION DOCUMENTS.
4. STRUCTURAL DELEGATED DESIGN COMPONENTS SHALL NOT BE INSTALLED UNTIL APPROVED BY THE BUILDING OFFICIAL.
5. STRUCTURAL DELEGATED DESIGN ITEMS REQUIRING DEFERRED SUBMITTALS INCLUDE, BUT ARE NOT LIMITED TO :
   a. METAL-PLATE-CONNECTED WOOD TRUSSES, BLOCKING, BRIDGING, BRIDGING CONNECTIONS, TRUSS HANGERS, AND RELATED COMPONENTS.

K. NON-STRUCTURAL DELEGATED DESIGNS AND DEFERRED SUBMITTALS

1. NON-STRUCTURAL DELEGATED DESIGNS AND SUBSEQUENT DEFERRED SUBMITTALS ARE FOR ITEMS NOT INCLUDED IN THE STRUCTURAL DELEGATED DESIGN SECTION. THESE ARE ITEMS THAT ARE NOT CRITICAL TO THE OVERALL PERFORMANCE OF THE STRUCTURAL SYSTEM BUT THAT IMPART LOADS AND FORCES TO THE STRUCTURAL SYSTEM.
2. NON-STRUCTURAL DEFERRED SUBMITTALS SHALL BEAR THE STAMP AND SIGNATURE OF THE DESIGN PROFESSIONAL RESPONSIBLE FOR THE DESIGN.
3. ARW ENGINEERS WILL REVIEW NON-STRUCTURAL DEFERRED SUBMITTALS TO VERIFY DESIGN CRITERIA IS COMPLIANT WITH THE APPROVED CONSTRUCTION DOCUMENTS.
4. IF THE STRUCTURAL DRAWINGS INCLUDE LOADS TO ACCOMMODATE NON-STRUCTURAL ELEMENTS, THE CONTRACTOR SHALL SUBMIT DOCUMENTATION INDICATING THAT THE NON-STRUCTURAL ELEMENTS COMPLY WITH THE LOADING CRITERIA PROVIDED HEREIN. SUCH DOCUMENTATION SHALL BEAR THE STAMP AND SIGNATURE OF THE DESIGN PROFESSIONAL RESPONSIBLE FOR THE DESIGN.
5. WHEN THE NON-STRUCTURAL DEFERRED SUBMITTAL INDICATES THAT THE ELEMENT WILL IMPART FORCES IN EXCESS OF LOADS THAT ARE INDICATED ON THE STRUCTURAL DRAWINGS, THE CONTRACTOR SHALL SUBMIT A DETAILED GRAPHICAL REPRESENTATION OF THOSE DESIGN LOADS, INCLUDING MAGNITUDE, AND LOCATION. THE GRAPHIC SHALL BE ACCOMPANIED BY DOCUMENTATION INDICATING THAT THE NON-STRUCTURAL ELEMENT DESIGN COMPLIES WITH THE LOADING CRITERIA PROVIDED HEREIN. THE LETTER SHALL BEAR THE STAMP AND SIGNATURE OF THE DESIGN PROFESSIONAL RESPONSIBLE FOR THE DESIGN.
6. NON-STRUCTURAL DELEGATED DESIGN ITEMS REQUIRING DEFERRED SUBMITTALS SHALL INCLUDE, BUT ARE NOT LIMITED TO :
   a. SEISMIC BRACING OF ALL ARCHITECTURAL, MECHANICAL, PLUMBING, AND ELECTRICAL ITEMS WHERE REQUIRED BY THE MOST RECENT VERSION OF ASCE 7 AND THE PROJECT CONTRACT DOCUMENTS.

bhd ARCHITECTS
www.bhdarchitects.com
Phone 801.571.0010
Fax 801.571.0303
Toll Free 888.571.0010
65 East Wadsworth Park Drive
Suite 205 Draper, Utah 84020

PROFESSIONAL STRUCTURAL ENGINEER Matthew C. McBride No. 353993 3/28/24 STATE OF UTAH

ARW ENGINEERS
154 W. Pierce Street
Ogden, Utah 84404
+1 801.782.8588
ownsgroup@arw.com

THE CHURCH OF JESUS CHRIST OF LATTER-DAY SAINTS

Tooele UT Deseret Peak Sr Seminary

Approximately: 2234 North Bero Boulevard, Tooele, Utah
40.569694, -112.303347

Date:	BHD #:	County Parcel:	Plan Series:	Owner #:
3 Apr 2024	2326	02-143-0-0115	Custom 5 CR	501-3450

Sheet Issue and Revision Schedule

#	Date	Description
1	3 Apr 2024	Bid Documents

Structural Notes And Schedules

S002

4/4/2024 11:01:33 AM

C:\Users\leec\OneDrive - ARW Engineers\Documents\S-23741 - Toole Seminary - 2024_leecragun.rvt

COIL STRAP LAP SPLICE SCHEDULE

ITEM #	LAP SPLICE			COMMENTS
	MIN. # FASTENER PER SPLICE	MIN. LAP SPLICE LENGTH		
		STACKED	SIDE-BY-SIDE	
CMST 12	25-16d	22"	33"	
	30-10d	27"	39"	
CMST 14	18-16d	16"	26"	
	21-10d	19"	30"	
CMSTC 16	13-16d	11"	20"	
	15-10d	12"	20"	
CS 14	26-10d	--	15"	
	30-8d	--	16"	
CS 16	20-10d	--	11"	
	22-8d	--	13"	
CS 18	16-10d	--	9"	
	18-8d	--	11"	
CS 20	12-10d	--	6"	
	14-8d	--	9"	
CS 22	10-10d	--	7"	
	12-8d	--	6"	

NOTES:
1. NO STRAP MODIFICATION IS ALLOWED.
2. SPLICE MUST MEET BOTH THE MINIMUM NUMBER OF FASTENERS AND THE MINIMUM SPLICE LENGTH.
3. ALL NAIL SIZES LISTED ARE COMMON NAILS.
4. 10d COMMON MAY BE REPLACED BY 16d SINKERS. NO OTHER NAIL SUBSTITUTION IS ALLOWED FOR LAP SPLICES.
5. IF WOOD SPLITTING OCCURS, USE EVERY OTHER NAIL HOLE AND LENGTHEN SPLICE TO ACCOMMODATE THE REQUIRED NUMBER OF NAILS.
6. ALL STRAPS TO BE INSTALLED UNDER SHEATHING.
7. TWO OPTIONS EXIST FOR COIL STRAP LAPPING.
   a. LAP ONE STRAP STACKED ON TOP OF THE OTHER STRAP.
   b. INSTALL STRAPS SIDE BY SIDE - TO DO THIS A LARGER BLOCK MUST BE USED. THE BLOCK MUST BE ON SOLID PIECE.
8. STRAP TO BE INSTALLED TIGHT.

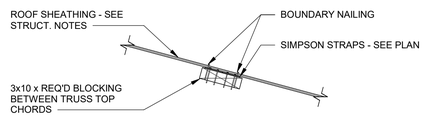

SIDE-BY-SIDE LAP

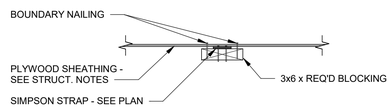

STACKED LAP

2021 IBC CONCRETE REBAR LAP SPLICE SCHEDULE

FOR CONCRETE APPLICATIONS (ACI 318 - 14)

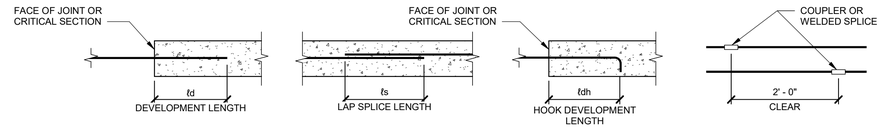

BAR LOCATION	CONCRETE		CONCRETE REINFORCING & SPLICE LENGTHS (IN)																												
			BAR SIZE																												
			#3			#4			#5			#6			#7			#8			#9			#10			#11			COMMENTS
	TYPE	STRENGTH	ℓd	ℓs	ℓdh	ℓd	ℓs	ℓdh	ℓd	ℓs	ℓdh	ℓd	ℓs	ℓdh	ℓd	ℓs	ℓdh	ℓd	ℓs	ℓdh	ℓd	ℓs	ℓdh	ℓd	ℓs	ℓdh	ℓd	ℓs	ℓdh	
VERT. WALL BARS, FILL ON METAL DECK	NWC	3000 PSI	17	22	8	22	29	8	28	36	10	33	43	12	48	62	13	55	72	15	62	81	17	69	90	19	76	99	30	
HORIZ. WALL BARS, FOOTING TOP BARS	NWC	3000 PSI	22	29	6	29	38	6	36	47	8	43	56	12	48	62	13	55	72	15	62	81	17	69	90	19	76	99	30	
BEAM BOTTOM BARS, COLUMN BARS	NWC	3000 PSI	17	22	8	22	29	11	28	36	14	33	43	16	48	62	19	55	72	22	62	81	25	69	90	27	76	99	30	
FOOTING BOTTOM BARS	NWC	3000 PSI	12	16	8	14	18	8	17	22	10	20	26	12	29	38	13	33	43	15	37	48	17	42	55	19	46	60	30	
BEAM TOP BARS	NWC	3000 PSI	22	29	6	29	38	6	36	47	8	43	56	12	63	82	19	72	94	22	81	105	25	90	117	27	98	127	30	
SLAB ON GRADE	NWC	3000 PSI	12	16	8	14	18	8	17	22	10	20	26	12	32	42	13	42	55	15	53	69	17	69	90	19	76	99	30	

BAR LOCATION	CONCRETE		CONCRETE REINFORCING & SPLICE LENGTHS (IN)																												
			BAR SIZE																												
			#3			#4			#5			#6			#7			#8			#9			#10			#11			COMMENTS
	TYPE	STRENGTH	ℓd	ℓs	ℓdh	ℓd	ℓs	ℓdh	ℓd	ℓs	ℓdh	ℓd	ℓs	ℓdh	ℓd	ℓs	ℓdh	ℓd	ℓs	ℓdh	ℓd	ℓs	ℓdh	ℓd	ℓs	ℓdh	ℓd	ℓs	ℓdh	
VERT. WALL BARS, FILL ON METAL DECK	NWC	4500 PSI	14	18	7	18	23	6	23	30	8	27	35	10	40	52	11	45	59	13	51	66	14	56	73	16	62	81	25	
HORIZ. WALL BARS, FOOTING TOP BARS	NWC	4500 PSI	18	23	6	24	31	6	30	39	8	35	46	10	40	52	11	45	59	13	51	66	14	56	73	16	62	81	25	
BEAM BOTTOM BARS, COLUMN BARS	NWC	4500 PSI	14	18	7	18	23	9	23	30	11	27	35	13	40	52	16	45	59	18	51	66	20	56	73	22	62	81	25	
FOOTING BOTTOM BARS	NWC	4500 PSI	12	16	7	12	16	6	14	18	8	17	22	10	24	31	11	27	35	13	31	40	14	34	44	16	37	48	25	
BEAM TOP BARS	NWC	4500 PSI	18	23	6	24	31	6	30	39	8	35	46	10	51	66	16	59	77	18	66	86	20	73	95	22	80	104	25	
SLAB ON GRADE	NWC	4500 PSI	12	16	7	12	16	6	14	18	8	17	22	10	27	35	11	34	44	13	44	57	14	56	73	16	62	81	25	

NOTES :
1. MECHANICAL COUPLERS MAY BE USED IN LIEU OF LAP SPLICES SHOWN. SEE STRUCTURAL NOTES FOR MINIMUM COUPLER CAPACITY. WHERE MECHANICAL COUPLERS ARE USED, STAGGER ADJACENT SPLICES A MINIMUM OF 24" AS INDICATED ABOVE.
2. LENGTHS INDICATED IN THIS SCHEDULE SHALL BE INCREASED BY 50% FOR STRAIGHT BAR DEVELOPMENT AND 20% FOR HOOKED BARS WHERE EPOXY COATING IS USED.
3. WHEN SPLICING BARS OF DIFFERENT SIZES, USE LAP SPLICE LENGTH OF LARGER BARS UNO.
4. SPLICE BARS LARGER THAN #11 USING MECHANICAL COUPLERS.

STANDARD HOOK & BEND SCHEDULE

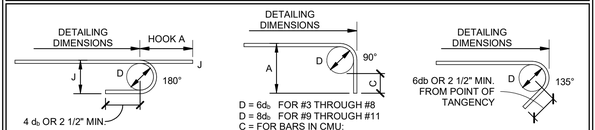

NOTE: d_b = BAR DIAMETER

BAR SIZE	DIMENSION OF STANDARD 180° HOOKS, ALL GRADES		DIMENSION OF STANDARD 90° HOOKS, ALL GRADES
	A	J	A
#3	5"	3"	6"
#4	6"	4"	8"
#5	7"	5"	10"
#6	8"	6"	1'-0"
#7	10"	7"	1'-2"
#8	11"	8"	1'-4"
#9	1'-3"	11 3/4"	1'-7"
#10	1'-5"	1'-1 1/4"	1'-10"
#11	1'-7"	1'-2 3/4"	2'-0"

FOOTING SCHEDULE

MARK	WIDTH	LENGTH	THICK	LENGTHWISE REINF.		CROSSWISE REINF.			REMARKS
				NO.	SIZE	NO.	SIZE	SPA.	
FC2	2'-0"	CONT.	15"	(2)	#5	--	--	--	
FC4	4'-0"	CONT.	24"	(5)	#6	(1)	#4	18"	REINF. TOP AND BOTTOM
F3	3'-0"	3'-0"	12"	(3)	#5	(3)	#5	--	
F4	4'-0"	4'-0"	24"	(5)	#6	(4)	#6	--	REINF. TOP AND BOTTOM
F6	6'-0"	6'-0"	18"	(7)	#5	(7)	#5	--	

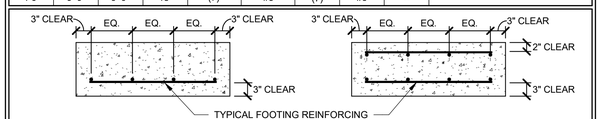

TYP. FOOTING SECTION

TYP. FOOTING SECTION W/ TOP & BOTTOM REINF.

NOTE:
1. AT RECESSED SLAB LOCATIONS, FOOTING THICKNESS IS FROM TOP OF RECESSED SLAB TO BOTTOM OF FOOTING. TOP OF FOOTING SHOWN ON PLANS IS TOP OF NON-RECESSED SLAB. POUR SLAB RECESS INTEGRAL WITH FOOTING. SEE DETAIL 7/S210 FOR MORE INFORMATION.

bhd ARCHITECTS
www.bhdarchitects.com
Phone 801.571.0010
Fax 801.571.0303
Toll Free 888.571.0010
65 East Wadsworth Park Drive
Suite 205 Draper, Utah 84020

ARW ENGINEERS
1532 W. Pierce Circle
Ogden, Utah 84401
+1 801.782.8388
arwengineers.com

THE CHURCH OF JESUS CHRIST OF LATTER-DAY SAINTS

Tooele UT Deseret Peak Sr Seminary

Approximately 2234 North Berra Boulevard, Tooele, Utah
40.569494, -112.303347

Date: 3 Apr 2024
BHD #: 2326
County Parcel: 02-143-0-0115
Plan Series: Custom 5 CR
Owner #: 501-3450

Sheet Issue and Revision Schedule

#	Date	Description
1	3 Apr 2024	Bid Documents

Schedules

S003

4/4/2024 11:01:33 AM

C:\Users\leec\OneDrive - ARW Engineers\Documents\S-23741 - Tooele Seminary - 2024_leecragun.rvt

WOOD SHEAR WALL SCHEDULE

WALL MARK	LEVEL	(NOTE 8) PLYWOOD SHEATHING (CDX U.N.O.)	EDGE NAILING (E.N.) (SEE NOTES 2 & 3)	NOMINAL BOTTOM PLATE SIZE	(NOTE 7) NOM. STUD SIZE (MIN.)	CONNECTION NAILING			TYP. SILL PLATE ANCHOR BOLTS (NOTE 9)		COMMENTS
						NAILING TOP PL. TOGETHER	BLKG. TO TOP PL.	TOP PL. SPLICE	DIA.	SPA.	
SW-1	GROUND TO ROOF	15/32"	6"	2x	2x	(2) 16d @ 12"	A35 @ 24"	(24) 16d	5/8" DIA.	32"o.c.	USE SW-1 UNLESS NOTED OTHERWISE
SW-2	GROUND TO ROOF	15/32"	2"	2x	2x	(2) 16d @ 12"	A35 @ 12"	(24) 16d	5/8" DIA.	16"o.c.	

NOTES:
1. ALL SHEATHING PANEL EDGES TO BE BLOCKED. USE 3x BLOCKING WHERE 3x STUDS ARE REQUIRED.
2. ALL NAILS TO BE COMMON OR GALVANIZED BOX.
3. FIELD NAILING TO BE SAME NAILS @ 12"o.c.
4. NOT USED
5. AT SHEAR WALLS W/ SHEATHING ON BOTH SIDES, BOTH VERTICAL AND HORIZONTAL JOINTS ON OPPOSITE SIDES OF THE WALL SHALL BE STAGGERED.
6. STAGGER E.N. AT DOUBLE TOP PLATES.
7. 3x NOMINAL FRAMING MEMBERS TO OCCUR AT ABUTTING PANEL EDGES. 2x NOMINAL FRAMING MEMBERS MAY BE USED AT INTERIOR OF PANEL, UNLESS NOTED OTHERWISE IN FLOOR FRAMING NOTES. (2) 2x NAILED TOGETHER W/ (2) 16d NAILS @ 16"o.c. OR 4x NOMINAL FRAMING MEMBERS OF THE SAME DEPTH AND LUMBER GRADE MAY BE USED IN LIEU OF 3x MEMBERS AT CONTRACTOR OPTION.
8. SHEATHING SHALL BE STAMPED W/ APA STAMP. O.S.B. OF EQUIVALENT THICKNESS, GRADE, AND RATING MAY BE USED IN LIEU OF PLYWOOD.
9. ALL SILL PLATE ANCHOR BOLTS TO HAVE MINIMUM 8" EMBEDMENT INTO CONCRETE FOOTINGS OR FOUNDATION WALL. SEE DETAIL 6/S202 AND 7/S202 FOR HOLDOWN ANCHORAGE REQUIREMENTS.
10. SEE SHEET S202 FOR TYPICAL SHEAR TRANSFER DETAILS.
11. TOP PLATE SPLICE NAILING SHALL APPLY TO EACH SIDE OF THE SPLICE. THE LENGTH OF THE OVERLAP SHALL BE SUFFICIENT TO PREVENT SPLITTING (48" MIN.)

SPECIAL INSPECTION SCHEDULE [1, 2]

ESTABLISHED PER 2021 IBC SECTION 110 AND CHAPTER 17

ITEM	CONTINUOUS[3]	PERIODIC[3]	REFERENCE
CONCRETE CONSTRUCTION (IBC 1705.3)			SEE IBC TABLE 1705.3 - REF. NOTE C1
REINFORCING STEEL PLACEMENT		●	
WELDING OF REINFORCING STEEL	●	●	REFERENCE NOTE C2
ANCHORS CAST IN CONCRETE	●		
VERIFYING REQUIRED DESIGN MIX		●	
CONCRETE PLACEMENT / SAMPLING	●		REFERENCE NOTE C3
CURING TEMPERATURE / TECHNIQUES		●	
CONCRETE AND SHOTCRETE PLACEMENT / APPLICATION TECHNIQUES	●		
PRESTRESSED CONCRETE			
APPLICATION OF PRESTRESSING FORCES	●		
GROUTING BONDED TENDONS	●		
ERECTION OF PRECAST MEMBERS		●	
PRECAST CONCRETE DIAPHRAGM CONNECTIONS			REFERENCE NOTE C6 AND C7
INSTALLATION OF THE EMBEDED PARTS	●		
CONTINUITY OF REINFORCEMENT ACROSS JOINTS	●		
CONNECTION COMPLETION IN THE FIELD			
VERIFICATION OF IN-SITU STRENGTH		●	REFERENCE NOTE C4
POST-INSTALLED ANCHOR PLACEMENT	●	●	REFERENCE NOTE C5
FORMWORK		●	REFERENCE NOTE C8
WOOD (IBC 1705.5 & 1705.12.1 & 1705.13.2)			
HIGH LOAD DIAPHRAGMS (ROOF / FLOOR)		●	REFERENCE NOTE W1
SITE-BUILT ASSEMBLIES		●	
SHEAR WALL & DIAPHRAGM NAILING		●	REFERENCE NOTE W2
DRAG STRUTS		●	
BRACES & SHEAR PANELS		●	
HOLDOWNS		●	
GLUING OPERATIONS	●		
METAL-PLATE-CONNECTED WOOD TRUSSES WITH HEIGHTS GREATER THAN OR EQUAL TO 60"		●	REFERENCE NOTE W2
METAL-PLATE-CONNECTED WOOD TRUSSES WITH SPANS GREATER THAN OR EQUAL TO 60 FEET		●	REFERENCE NOTE W3
SOILS (IBC 1705.6)			REFERENCE NOTE F1
VERIFY ADEQUATE MATERIALS BELOW FOOTINGS		●	REFERENCE NOTE F1
EXCAVATIONS EXTEND TO PROPER DEPTH AND REACH PROPER MATERIAL		●	REFERENCE NOTE F2
CLASSIFY & TEST CONTROLLED FILL MATERIALS		●	REFERENCE NOTE F2
FILL MATERIAL AND PLACEMENT	●		REFERENCE NOTE F3
PROPERLY PREPARED SITE AND SUB-GRADE PRIOR TO FILL.		●	REFERENCE NOTE F1

COMMENTS

C 1. SPECIAL INSPECTION IS NOT REQUIRED FOR CONC. ISOLATED SPREAD FOOTINGS, CONTINUOUS FOOTINGS, NON-STRUCTURAL SLABS, FOUNDATION WALLS, PATIOS, DRIVEWAYS, AND SIDEWALKS PROVIDED THE REQUIREMENTS OF IBC 1705.3 ARE MET.

C 2. PERIODIC SPECIAL INSPECTION IS ALLOWED FOR VERIFICATION OF THE WELDABILITY OF REINFORCING STEEL RESISTING FLEXURAL AND AXIAL FORCES IN INTERMEDIATE AND SPECIAL MOMENT FRAMES, BOUNDARY ELEMENTS OF SPECIAL REINFORCED CONCRETE SHEAR WALLS, AND SHEAR REINFORCEMENT. PERIODIC SPECIAL INSPECTION IS ALLOWED FOR WELDING OF OTHER ASTM A 706 REINFORCING STEEL NOT INCLUDED IN THE CONTINUOUS SPECIAL INSPECTION REQUIREMENTS NOTED ABOVE.

C 3. PERFORM AIR, SLUMP AND TEMP. TESTS WHEN CONCRETE SAMPLES ARE CAST.

C 4. PERIODIC SPECIAL INSPECTION IS REQUIRED FOR VERIFICATION OF IN-SITU CONCRETE STRENGTH PRIOR TO STRESSING OF TENDONS IN POST-TENSIONED CONCRETE AND PRIOR TO REMOVAL OF SHORES AND FORMS FROM BEAMS AND STRUCTURAL SLABS.

C 5. EPOXY AND EXPANSION ANCHORS INTO MASONRY OR CONCRETE MAY BE USED ONLY WHEN APPROVED BY ARCHITECT. AND/OR ENGINEER USING AN APPROVED PRODUCT WITH CURRENT PUBLISHED ICC RESEARCH REPORT NUMBERS. COORDINATE CONTINUOUS/PERIODIC SPECIAL INSPECTION REQUIREMENTS WITH ICC REPORT AND ACI 318: 17.8.2.4.

C 6. CONTINUOUS SPECIAL INSPECTION IS REQUIRED FOR PRECAST CONCRETE DIAPHRAGM CONNECTIONS OR REINFORCEMENT AT JOINTS CLASSIFIED AS MODERATE OR HIGH DEFORMABILITY ELEMENTS IN STRUCTURES ASSIGNED TO SEISMIC DESIGN CATEGORY C, D, E, OR F.

C 7. PERIODIC SPECIAL INSPECTION IS REQUIRED FOR THE INSTALLATION TOLERANCES OF PRECAST CONCRETE DIAPHRAGM CONNECTIONS FOR COMPLIANCE WITH ACI 550.5.

C 8. PERIODIC SPECIAL INSPECTION IS REQUIRED FOR FORMWORK SHAPE, LOCATION AND DIMENSIONS OF THE CONCRETE MEMBER BEING FORMED.

W 1. WOOD STRUCTURAL PANEL SHEATHING SHALL BE INSPECTED TO ASCERTAIN THAT GRADE AND THICKNESS ARE IN COMPLIANCE WITH APPROVED BUILDING PLANS. NOMINAL SIZE OF FRAMING MEMBERS AT ADJOINING PANEL EDGES, THE NAIL OR STAPLE DIAMETER AND LENGTH, THE NUMBER OF FASTENER LINES, AND SPACING BETWEEN FASTENERS IN EACH LINE AND AT EDGE MARGINS SHALL ALSO BE INSPECTED AND VERIFIED FOR COMPLIANCE WITH APPROVED BUILDING PLANS.

W 2. SPECIAL INSPECTIONS ARE NOT REQUIRED FOR WOOD SHEAR WALLS, SHEAR PANELS AND DIAPHRAGMS, INCLUDING NAILING, BOLTING, ANCHORING AND OTHER FASTENING TO OTHER ELEMENTS OF THE LATERAL FORCE RESISTING SYSTEM, WHERE THE LATERAL RESISTANCE IS PROVIDED BY STRUCTURAL SHEATHING AND THE SPECIFIED FASTENER SPACING AT PANEL EDGES IS MORE THAN 4"o.c.

W 3. SPECIAL INSPECTION SHALL BE PERFORMED TO VERIFY THAT THE INSTALLATION OF TEMPORARY AND PERMANENT RESTRAINT/BRACING IS INSTALLED IN ACCORDANCE WITH THE APPROVED TRUSS SUBMITTAL PACKAGE.

F 1. SPECIAL INSPECTION OF SOILS SHALL REFERENCE THE APPROVED GEOTECHNICAL REPORT TO DETERMINE COMPLIANCE.

F 2. WHERE GEOTECHNICAL REPORT IS NOT PROVIDED SPECIAL INSPECTIONS ARE REQUIRED TO VERIFY THAT THE IN-PLACE DRY DENSITY OF THE COMPACTED FILL IS NOT LESS THAN 90 PERCENT OF THE MAXIMUM DRY DENSITY AT OPTIMUM MOISTURE CONTENT DETERMINED IN ACCORDANCE WITH ASTM D1557.

F 3. CONTINUOUS SPECIAL INSPECTION IS REQUIRED DURING FILL PLACEMENT. VERIFY USE OF PROPER MATERIALS AND PROCEDURES IN ACCORDANCE WITH THE PROVISIONS OF THE APPROVED GEOTECHNICAL REPORT. VERIFY DENSITIES AND LIFT THICKNESSES DURING PLACEMENT AND COMPACTION OF COMPACTED FILL.

GENERAL SPECIAL INSPECTION NOTES :

1. THE ITEMS MARKED WITH A "●" IN THE SPECIAL INSPECTION SCHEDULE SHALL BE INSPECTED IN ACCORDANCE WITH IBC CHAPTER 17 BY A CERTIFIED SPECIAL INSPECTOR FROM AN ESTABLISHED TESTING AGENCY. FOR MATERIAL SAMPLING AND TESTING REQUIREMENTS, REFER TO THE MATERIAL SAMPLING AND TESTING SECTION, THE PROJECT SPECIFICATIONS, AND THE SPECIFIC GENERAL NOTES SECTIONS. THE TESTING AGENCY SHALL SEND COPIES OF ALL STRUCTURAL TESTING AND INSPECTION REPORTS DIRECTLY TO THE ARCHITECT, ENGINEER, CONTRACTOR, AND BUILDING OFFICIAL. ANY ITEMS WHICH FAIL TO COMPLY WITH THE APPROVED CONSTRUCTION DOCUMENTS SHALL IMMEDIATELY BE BROUGHT TO THE ATTENTION OF THE CONTRACTOR FOR CORRECTION. IF DISCREPANCIES ARE NOT CORRECTED, THEY SHALL BE BROUGHT TO THE ATTENTION OF THE BUILDING OFFICIAL, ARCHITECT, AND ENGINEER PRIOR TO COMPLETION OF THAT PHASE OF WORK. SPECIAL INSPECTION TESTING REQUIREMENTS APPLY EQUALLY TO ALL BIDDER DESIGNED COMPONENTS.
2. ANY CONSTRUCTION OR MATERIAL THAT HAS FAILED INSPECTION SHALL BE SUBJECT TO REMOVAL AND REPLACEMENT.
3. CONTINUOUS SPECIAL INSPECTION MEANS THE FULL-TIME OBSERVATION OF WORK REQUIRING SPECIAL INSPECTION BY AN APPROVED SPECIAL INSPECTOR WHO IS PRESENT IN THE AREA WHERE THE WORK IS BEING PERFORMED. PERIODIC SPECIAL INSPECTION MEANS THE PART-TIME OR INTERMITTENT OBSERVATION OF WORK REQUIRING SPECIAL INSPECTION BY AN APPROVED SPECIAL INSPECTOR WHO IS PRESENT IN THE AREA WHERE THE WORK HAS BEEN OR IS BEING PERFORMED AND AT THE COMPLETION OF THE WORK. (IBC SECTION 202)

WOOD OPENING SCHEDULE

OPENING SIZE	KING STUDS		TRIMMER STUDS	HEADER BEAM (UNO)
	INTERIOR WALLS	EXTERIOR WALLS		
UP TO 4'-0"	(1) 2x6	(2) 2x6	(2) 2x6	(3) 2x10 DF-2
4'-1" TO 10'-0"	(2) 2x6	(3) 2x6	(3) 2x6	(3) 1 3/4"x11 7/8" LVL
10'-1" TO 14'-0"	(2) 2x6	(3) 2x6	(3) 2x6	(3) 1 3/4"x14" LVL
14'-1" TO 18'-0"	(3) 2x6	(2) 1 3/4"x5 1/2" LVL	6x6 POST	(3) 1 3/4"x18" LVL

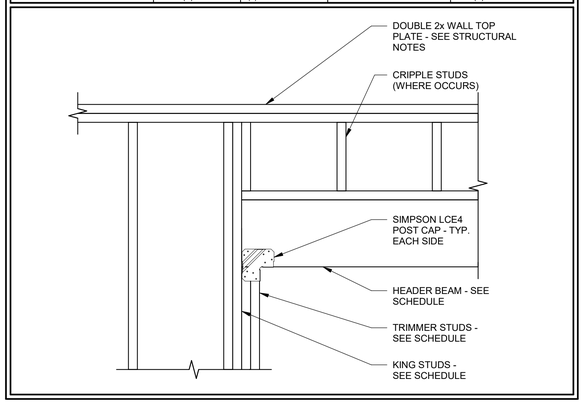

bhd ARCHITECTS
www.bhdarchitects.com
Phone 801.571.0010
Fax 801.571.0303
Toll Free 888.571.0010
65 East Wadsworth Park Drive
Suite 205 Draper, Utah 84020

PROFESSIONAL STRUCTURAL ENGINEER Matthew C. McBride No. 353993 3/28/24 STATE OF UTAH

ARW ENGINEERS
1594 W. Pierce Circle
Draper, Utah 84484
t: 801.768.1988
leecragun@arw.com

THE CHURCH OF JESUS CHRIST OF LATTER-DAY SAINTS

Tooele UT Deseret Peak Sr Seminary

Approximately: 2234 North Bero Boulevard, Tooele, Utah
40.5696194, -112.303347

Date: 3 Apr 2024 **BHD #:** 2326 **County Parcel:** 02-143-0-0115 **Plan Series:** Custom 5 CR **Owner #:** 501-3450

Sheet Issue and Revision Schedule

#	Date	Description
1	3 Apr 2024	Bid Documents

Schedules

S004

4/4/2024 11:01:34 AM

C:\Users\leec\OneDrive - ARW Engineers\Documents\S-23741 - Tooele Seminary - 2024_leecragun.rvt

FOOTING & FOUNDATION NOTES :

1. SEE SHEET S001-S002 FOR GENERAL STRUCTURAL NOTES.
2. ALL FOOTINGS SHALL BE PLACED ON SOIL WHICH HAS BEEN PREPARED FOR THE BEARING PRESSURE SHOWN IN THE STRUCTURAL NOTES.
3. VERIFY ALL DIMENSIONS WITH DRAWINGS AND NOTIFY ENGINEER OF ANY DISCREPANCIES FOUND.
4. SOLID GROUT ALL MASONRY COURSES BELOW FINISHED FLOOR OR EXTERIOR GRADE (WHICHEVER IS HIGHER).
5. SEE SHEET S003 FOR FOOTING SCHEDULE.
6. PROVIDE DOWELS IN FOOTINGS / FOUNDATIONS TO MATCH VERTICAL WALL REINFORCING U.N.O.
7. SEE SHEETS S201 AND S210 FOR TYPICAL FOOTING AND FOUNDATION DETAILS.
8. ALL EXTERIOR WALL FOOTINGS TO BEAR A MINIMUM DIMENSION BELOW EXTERIOR GRADE AS NOTED IN GENERAL STRUCTURAL NOTES.
9. FOUNDATION WALLS ARE 8" THICK UNLESS NOTED OTHERWISE, AND ARE DESIGNED AND DETAILED FOR THE COMPLETED CONDITION. CONTRACTOR IS RESPONSIBLE FOR MEANS AND METHODS OF CONSTRUCTION. BACKFILLED WALLS SHALL BE ADEQUATELY BRACED DURING CONSTRUCTION AND BACKFILLING TO PRODUCE PLUMB AND TRUE FINISHED WALLS.
10. ALL ANCHORS, HOLDOWNS, ANCHOR BOLTS, DOWELS, EMBEDDED ITEMS, ETC. SHALL BE HELD IN PLACE PRIOR TO AND DURING CONCRETE AND/OR GROUT PLACEMENT.
11. COORDINATE ALL FOOTING DEPTHS (INTERIOR AND EXTERIOR) WITH DRAINS, CONDUITS, ETC. THAT MAY INTERFERE WITH FOOTINGS.
12. CENTER SPOT FOOTINGS BENEATH HOLDOWN POSTS - SEE SHEET S102.
13. PERGOLA FOOTING PROVIDED BY PERGOLA MANUFACTURER.

CONCRETE SLAB NOTES :

1. SLAB ON GRADE SHALL BE 4" THICK CONCRETE U.N.O. SLAB SHALL BE UNDERLAIN BY FREE DRAINING MATERIAL AS PRESCRIBED IN THE SOILS REPORT.
2. SEE DETAIL 1/S201 FOR CONTROL AND CONSTRUCTION JOINT INFORMATION.
3. SHADING INDICATES 2" RECESSED SLAB SEE DETAIL 7/S201 FOR MORE INFORMATION.

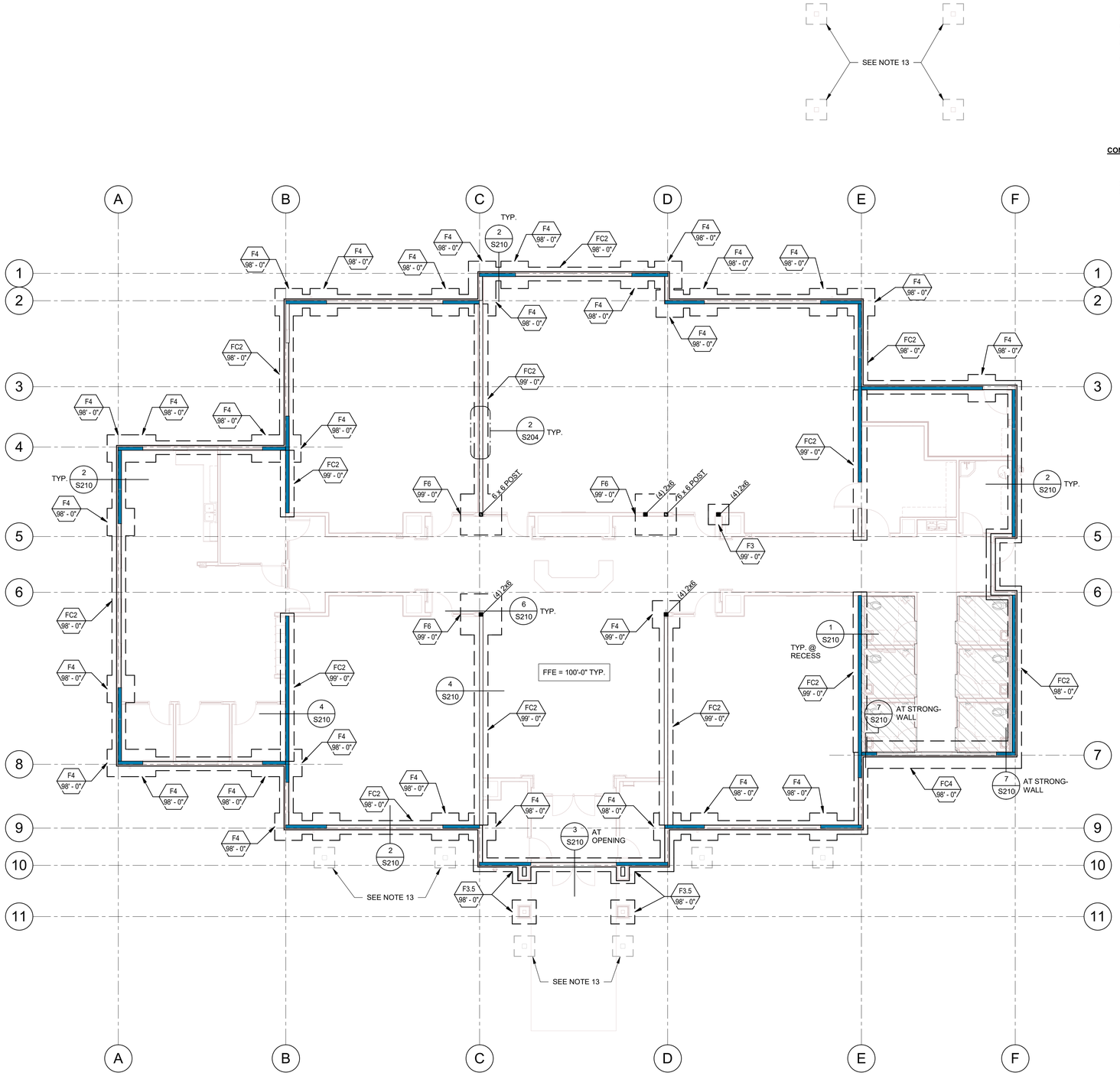

FOOTING AND FOUNDATION PLAN

SCALE : 1/8" = 1'-0"

A S101

bhd ARCHITECTS
www.bhdarchitects.com
Phone 801.571.0010
Fax 801.571.0303
Toll Free 888.571.0010
65 East Wadsworth Park Drive
Suite 205 Draper, Utah 84020

Matthew C. McBride No. 353893 3/28/24 STATE OF UTAH

ARW ENGINEERS
154 W. Pine Circle
Draper, Utah 84020
t: 801.756.1868
arwengineers.com

THE CHURCH OF JESUS CHRIST OF LATTER-DAY SAINTS

Tooele UT Deseret Peak Sr Seminary

Approximately: 2234 North Bero Boulevard, Tooele, Utah
40.569694, -112.303347

Date: 3 Apr 2024
BHD #: 2326
County Parcel: 02-143-0-0115
Plan Series: Custom 5 CR
Owner #: 501-3450

Sheet Issue and Revision Schedule

#	Date	Description
1	3 Apr 2024	Bid Documents

Footing & Foundation Plan

S101

WOOD FRAMING NOTES:

1. SHEAR WALLS ARE INDICATED ON SHEET S004. SEE THE SHEAR WALL SCHEDULE FOR SHEAR WALL ATTACHMENTS.
2. AT TOP PLATE SPLICE, LAP 6'-0" MIN. AND CONNECT WITH MIN (30) 16d COMMON NAILS. OUTSIDE OF LAP SPLICE LOCATIONS NAIL TOGETHER WITH (2) ROWS OF 16d @ 12"o.c.
3. U.N.O., ALL EXTERIOR WALLS, INTERIOR BEARING WALLS AND SHEAR WALLS SHALL BE FRAMED WITH 2x6 STUDS AT 16"o.c.. OTHER WALLS TO BE AS PER ARCHITECTURAL DRAWINGS.
4. FOR TYPICAL TRIMMERS, WHERE NOT OTHERWISE INDICATED, SEE S004.
5. FOR TYPICAL KING STUDS, WHERE NOT OTHERWISE INDICATED, SEE S004.
6. INDICATES WALL WITH PLYWOOD SHEATHING. SEE WOOD SHEAR WALL SCHEDULE. USE SW-1 UNLESS NOTED OTHERWISE ON PLANS.
7. SHEATHING TO EXTEND FULL LENGTH OF WALL FOR FINISH.
8. WALL SHEATHING SHALL BE CONTINUOUS THROUGH INTERSECTION WITH PERPENDICULAR WALL.
9. SIMPSON STRONG-WALL - WSWH 24X10 - SEE 7/S210.

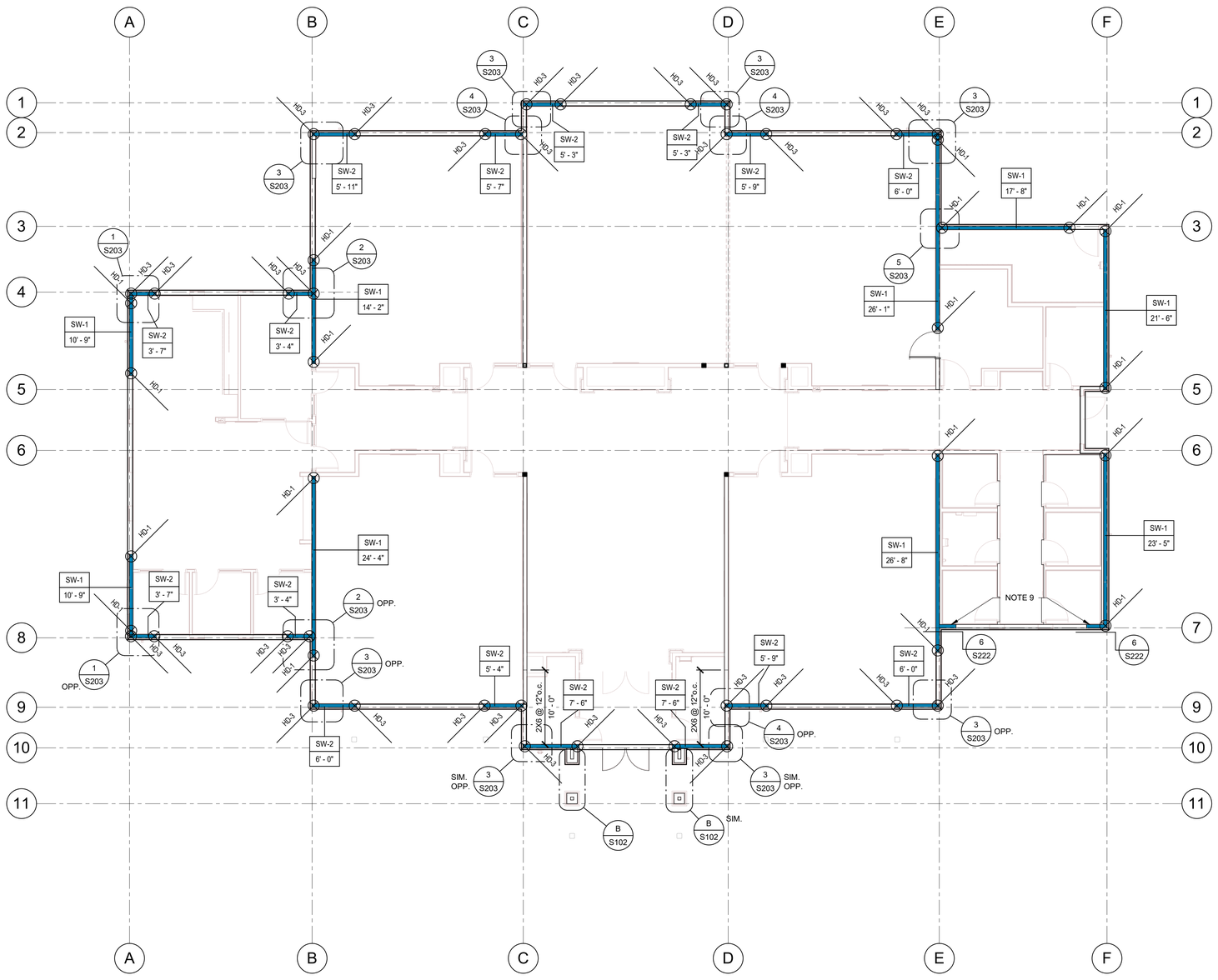

SHEARWALL & HOLDOWN PLAN
SCALE : 1/8" = 1'-0"
A S102

HOLDOWN SCHEDULE (L)			
MARK	SIMPSON HOLDOWN	POST	ANCHOR
HD-1	HDU2-SDS2.5	(3) 2x	SEE DETAIL 7/S202
HD-2	HDU5-SDS2.5	(2) 2x	SEE DETAIL 7/S202
HD-3	HDU8-SDS2.5	(4) 2x	SEE DETAIL 7/S202
HD-4	HDU11-SDS2.5	(5) 2x	SEE DETAIL 7/S202

SEE DETAIL 1/S202 FOR TYPICAL WALL FRAMING INFORMATION

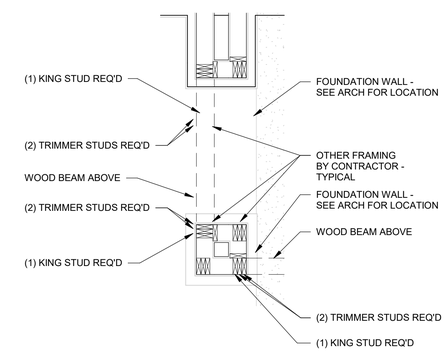

HOLDOWN PLAN
SCALE : 1/2" = 1'-0"
B S102

bhd ARCHITECTS
www.bhdarchitects.com
Phone 801.571.0010
Fax 801.571.0303
Toll Free 888.571.0010
65 East Wadsworth Park Drive
Suite 205 Draper, Utah 84020

PROFESSIONAL STRUCTURAL ENGINEER Matthew C. McBride No. 353093 3/28/24 STATE OF UTAH

ARW ENGINEERS
1792 W. Pierce Circle
Draper, Utah 84484
+1 801.782.1988
arwengineers.com

THE CHURCH OF JESUS CHRIST OF LATTER-DAY SAINTS

Tooele UT Deseret Peak Sr Seminary

Approximately 2234 North Berra Boulevard, Tooele, Utah
40.569694, -112.303347

Date: 3 Apr 2024
BHD #: 2326
County Parcel: 02-143-0-0115
Plan Series: Custom 5 CR
Owner #: 501-3450

Sheet Issue and Revision Schedule

#	Date	Description
1	3 Apr 2024	Bid Documents

Shearwall & Holdown Plan

S102

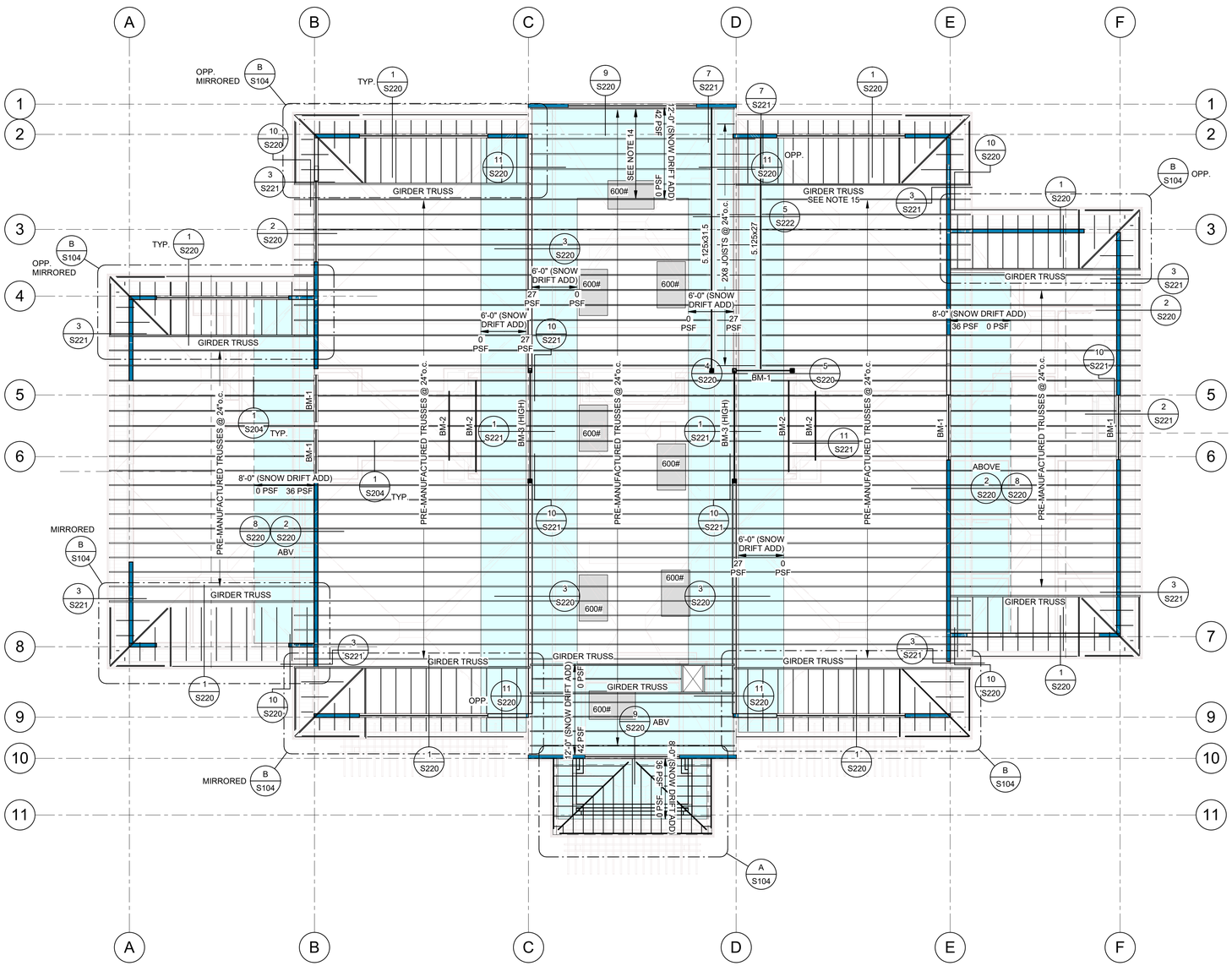

ROOF FRAMING PLAN

SCALE : 1/8" = 1'-0"

A S103

WOOD ROOF FRAMING NOTES :

1. FOR ROOF SHEATHING AND NAILING REQUIREMENTS, SEE STRUCTURAL NOTES SHEET S001-S002.
2. SHEAR WALLS ARE INDICATED ON SHEET S102. SEE THE SHEAR WALL SCHEDULE ON SHEET S004.
3. SEE WOOD FRAMING NOTES ON SHEET S102 FOR WALL TOP PLATE CONFIGURATION AND SPLICE REQUIREMENTS.
4. SEE PREMANUFACTURED TRUSS NOTES FOR ADDITIONAL INFORMATION.
5. WHERE WOOD BEAM IS SHOWN BUT HEADER IS NOT EXPLICITLY CALLED OUT ON PLANS, REFER TO THE WOOD OPENING SCHEDULE ON SHEET S004 FOR BEAM SIZE.
6. WHERE WOOD BEAMS ARE INDICATED BY 'BM', USE THE FOLLOWING:

	WOOD BEAM SIZE	# OF TRIMMERS REQUIRED
BM-1	(3) 1 3/4"x11 7/8" LVL	3
BM-2	(2) 2 x 6	1
BM-3	(3) 1 3/4"x14 LVL	6 x 6 POST

PROVIDE BUILT-UP WOOD STUD PACK IN WALL TO MATCH HANGER WIDTH.
7. CONTRACTOR SHALL ERECT AND MAINTAIN ADEQUATE TEMPORARY BRACING UNTIL ALL ROOF FRAMING AND ROOF DIAPHRAGM ATTACHMENTS ARE COMPLETE.
8. SEE DETAIL 1/S203 FOR ATTACHMENT OF NON-BEARING WALLS TO PRE-MANUFACTURED TRUSSES.
9. SEE ARCH. DETAILS FOR DRAFTSTOP DETAILS & LOCATIONS.
10. SEE DETAIL 4/S202 FOR OPENINGS IN ROOF DIAPHRAGM.
11. INSTALL COIL STRAP DIRECTLY ABOVE PRE-MANUFACTURED TRUSS. SEE DETAIL 4/S220 FOR MORE INFORMATION.
12. PROVIDE (3) 2x TYPICAL WALL STUDS DIRECTLY BELOW GLULAMS.
13. COORDINATE LOCATIONS OF EXTERIOR LIGHTS TO AVOID INTERUPTION OF ROOF FRAMING.
14. CONNECT TRUSSES WITH SIMPSON THA218-2 MAX.INSTALLATION. REFER TO DETAIL 5/S222.
15. CONNECT GIRDER TRUSSES W/ SIMPSON THA218-2 MAX INSTALLATION.

PRE-MANUFACTURED TRUSS NOTES :

1. PRE-MANUFACTURED TRUSSES SHALL BE DESIGNED PER ALL APPLICABLE LOAD COMBINATIONS AND LOAD CONFIGURATIONS AS REQUIRED BY THE GOVERNING CODE AND THE GENERAL STRUCTURAL NOTES :

   THE FOLLOWING CRITERIA SHALL BE USED IN DESIGN.

   SNOW LOAD = PER GENERAL STRUCTURAL NOTES
   LIVE LOAD = PER GENERAL STRUCTURAL NOTES
   DEAD LOAD = 13 PSF TOP CHORD
   7 PSF BOTTOM CHORD
   WIND LOAD = PER GENERAL STRUCTURAL NOTES
   SNOW DRIFT = SEE PLAN
   MECH UNITS = SEE PLAN FOR RTU WEIGHTS

2. ALL TRUSSES SHALL BE DESIGNED FOR A 150 POUND POINT LOAD APPLIED AT ANY LOCATION ALONG THE BOTTOM CHORD. DESIGN ALL TRUSSES FOR WIND UPLIFT PER THE GOVERNING CODE WITH A 12 PSF DEAD LOAD.
3. ALL TRUSS TO TRUSS CONNECTIONS PROVIDED BY TRUSS MANUFACTURER.
4. TRUSS MANUFACTURER SHALL COORDINATE AND INCLUDE ALL ADD LOADS AS INDICATED ON THE FRAMING PLAN(S).
5. COORDINATE DUCT RUNS AND TRUSS WEB CONFIGURATIONS WITH MECHANICAL & ARCH. DRAWINGS. DO NOT FIELD MODIFY TRUSSES TO ACCOMMODATE DUCTING AND OTHER MISCELLANEOUS EQUIPMENT WITHOUT WRITTEN DIRECTION FROM THE TRUSS MANUFACTURER OR STRUCTURAL ENGINEER.
6. INSTALL SIMPSON LGT HOLDOWNS WITH 2400 lb. CAPACITY @ EACH GIRDER TRUSS. TRUSS MANUF. TO VERIFY THAT THIS SIMPSON HOLDOWN MEETS OR EXCEEDS REQUIRED UPLIFT CAPACITIES FOR ALL TRUSSES DESIGNED. TRUSS MANUF. RESPONSIBLE TO NOTIFY EOR IN WRITING WHERE UPLIFT CAPACITIES ARE EXCEEDED.
7. COORDINATE ALLOWABLE TRUSS DEFLECTIONS WITH ARCHITECT FOR DETAILING OF NON-BEARING STUD WALLS BELOW.
8. CONTRACTOR SHALL PROVIDE SHOP DRAWINGS AND CALCULATIONS FOR REVIEW AS REQUIRED BY THE DEFERRED SUBMITTAL SECTION OF THE GENERAL STRUCTURAL NOTES.
9. WHERE INDICATED, BLOCK PANEL EDGES OF ROOF SHEATHING WITH FLAT 2X BLOCKING.
10. ALL TOP CHORDS AND TOP CHORDS EXTENSIONS TO BE 2X8 MEMBERS (7 1/4" DEPTH). BOTTOM CHORDS TO BE MINIMUM 2X6.

bhd ARCHITECTS
www.bhdarchitects.com
Phone 801.571.0010
Fax 801.571.0303
Toll Free 888.571.0010
65 East Wadsworth Park Drive
Suite 205 Draper, Utah 84020

ARW ENGINEERS
1594 W. Pierpont Circle
Draper, Utah 84021
+1 801.756.1555
arwengineers.com

THE CHURCH OF
JESUS CHRIST
OF LATTER-DAY SAINTS

Tooele UT Deseret Peak Sr Seminary

Approximately 2234 North Berra Boulevard, Tooele, Utah
40.569694, -112.303347

Date: 3 Apr 2024
BHD #: 2326
County Parcel: 02-143-0-0115
Plan Series: Custom 5 CR
Owner #: 501-3450

Sheet Issue and Revision Schedule

#	Date	Description
1	3 Apr 2024	Bid Documents

Roof Framing Plan

S103

4/4/2024 11:01:37 AM

C:\Users\leec\OneDrive - ARW Engineers\Documents\S-23741 - Toole Seminary - 2024_leecragun.rvt

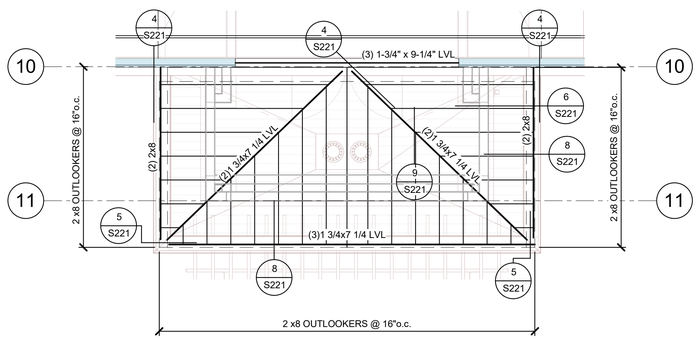

ENLARGED ROOF FRAMING PLAN (A / S104)

SCALE : 1/4" = 1'-0"

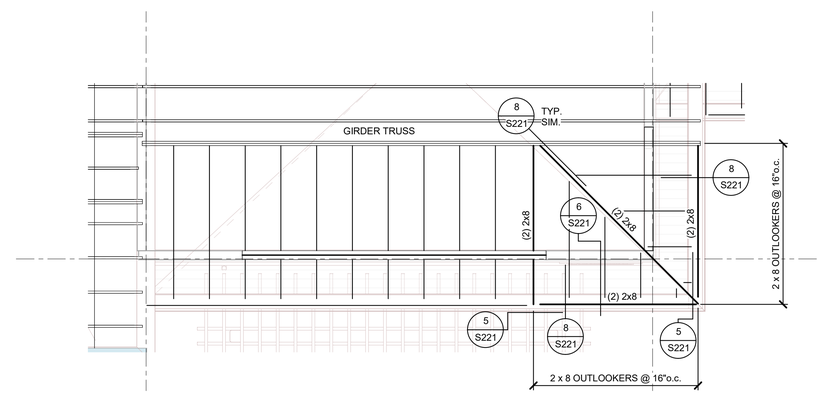

ENLARGED ROOF FRAMING PLAN (B / S104)

SCALE : 1/4" = 1'-0"

bhd ARCHITECTS
www.bhdarchitects.com
Phone 801.571.0010
Fax 801.571.0303
Toll Free 888.571.0010
65 East Wadsworth Park Drive
Suite 205 Draper, Utah 84020

Matthew C. McBride
No. 353893
3/28/24
PROFESSIONAL STRUCTURAL ENGINEER
STATE OF UTAH

ARW ENGINEERS
1594 W. Pierce Circle
Draper, Utah 84484
801.792.1888
arwengineers.com

THE CHURCH OF
JESUS CHRIST
OF LATTER-DAY SAINTS

Tooele UT Deseret Peak Sr Seminary

Approximately 2234 North Berra Boulevard, Tooele, Utah
40.569694, -112.303347

Date: 3 Apr 2024
BHD #: 2326
County Parcel: 02-143-0-0115
Plan Series: Custom 5 CR
Owner #: 501-3450

Sheet Issue and Revision Schedule

#	Date	Description
1	3 Apr 2024	Bid Documents

Enlarged Roof Framing Plans

S104

4/4/2024 11:01:37 AM

C:\Users\leec\OneDrive - ARW Engineers\Documents\S-23741 - Toole Seminary - 2024_leecragun.rvt

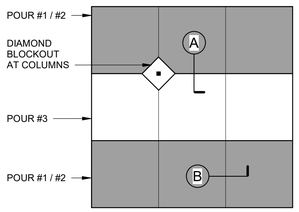

NOTES:
1. JOINTS SHALL OCCUR AT MAIN COLUMN / GRID LINES W/ 10'-0" MAX. SPACING BETWEEN JOINTS AT 4" SLABS; 12'-0" MAX. AT 5" SLABS, AND 15'-0" MAX. AT 6" SLABS.
2. SEE PLAN FOR SLAB THICKNESS 'T' AND REINFORCING SIZE AND SPACING.

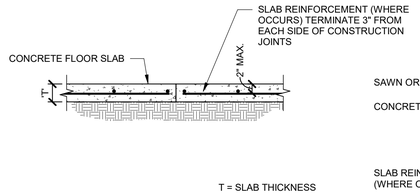

CONSTRUCTION JOINT (A)
SCALE : NONE

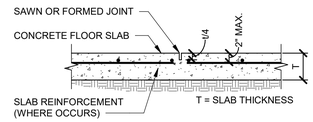

CONTROL JOINT (B)
SCALE : NONE

TYPICAL CONCRETE SLAB JOINTS
SCALE : NONE
1 / S201

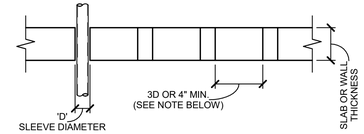

PIPING / CONDUIT THRU SLAB OR WALL

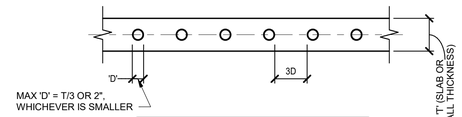

NOTE: WHERE CLEAR DISTANCE BETWEEN SLEEVES IS IMPOSSIBLE, THIS AREA SHALL BE TREATED AS AN OPENING PER REINFORCING AT STRUCTURAL CONCRETE SLAB OPENINGS, SEE TYP. DETAIL.

PIPING / CONDUIT IN SLAB OR WALL

TYP. PIPING/CONDUIT AT SLAB OR WALL
SCALE : NONE
2 / S201

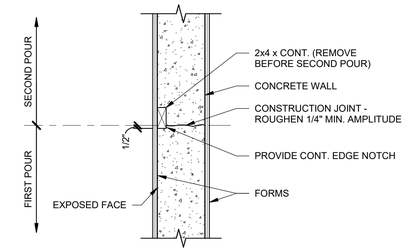

NOTE: PROVIDE 2 x 4 x CONT. ON EACH FACE WHEN BOTH FACES ARE EXPOSED. REMOVE 2x4 AND TIGHTEN FORM TIE BEFORE PLACING SECOND POUR REINFORCING CONT. THRU JOINT. (REBAR NOT SHOWN FOR CLARITY)

TYPICAL CONSTRUCTION JOINT DETAIL IN CONC. WALL
SCALE : NONE
3 / S201

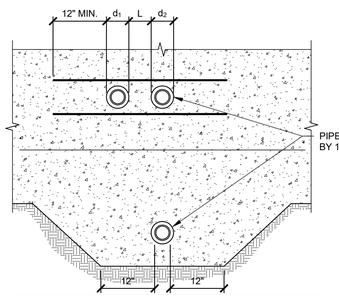

NOTES :
1. TYP. FOUNDATION WALL REINFORCING NOT SHOWN FOR CLARITY.
2. FOR OPENINGS LARGER THAN 12" IN ANY DIRECTION. SEE STRUCTURAL NOTE E-7.
3. DETAIL IS SIMILAR AT MASONRY FOUNDATION WALLS.
4. DISTANCE 'L' SHALL BE THE GREATER OF $(d_1 + d_2)/2$ OR 4".

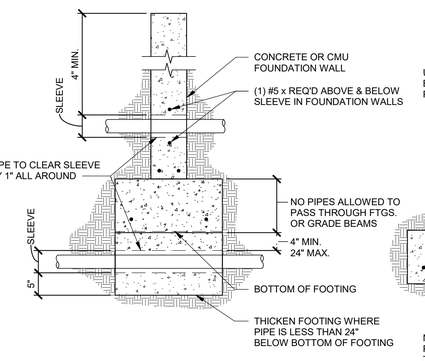

PIPE CROSSING FOOTING / FOUNDATION WALL

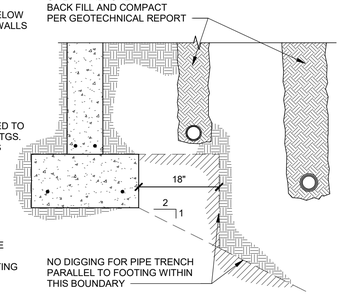

PIPE PARALLEL TO FOOTING

ALLOWABLE PIPING LOCATIONS @ FOOTING DETAIL
SCALE : NONE
4 / S201

NOTES:
1. ts = LAP SPLICE LENGTH - SEE REBAR LAP SCHEDULE.
2. VERTICAL BARS NOT SHOWN.
3. THIS DETAIL IS APPLICABLE AT ALL FOOTINGS AND FOUNDATION WALLS.

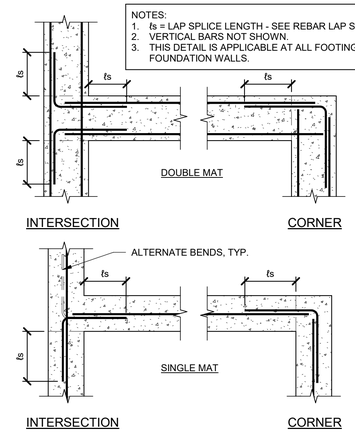

TYP. REINF. @ INTERSECTIONS IN CONC. DETAIL
SCALE : NONE
5 / S201

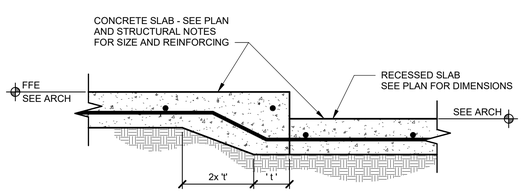

TYPICAL RECESSED SLAB
SCALE : NONE
7 / S201

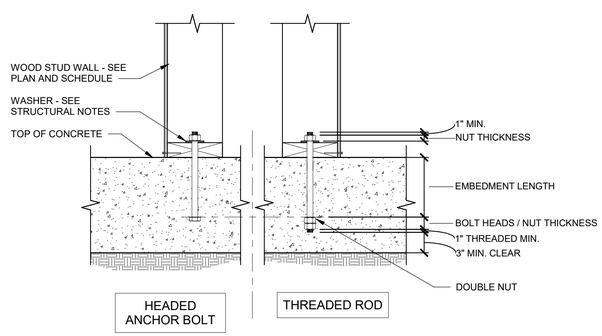

DETAIL
SCALE : NONE
8 / S201

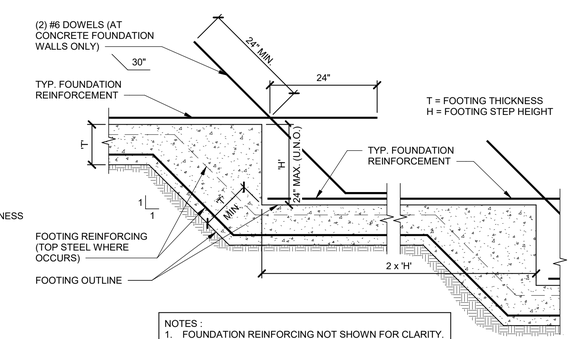

NOTES :
1. FOUNDATION REINFORCING NOT SHOWN FOR CLARITY.
2. SEE FOOTING SCHEDULE FOR FOOTING WIDTH AND REINFORCING SIZE AND LOCATION. ALL FOOTING REINFORCING REFERENCED IN THE SCHEDULE OR SHOWN IN THE DETAILS MUST RUN CONTINUOUS THROUGH THE FOOTING STEP.

TYPICAL STEPPED FOOTING
SCALE : NONE
9 / S201

4/4/2024 11:01:38 AM

C:\Users\leec\OneDrive - ARW Engineers\Documents\S-23741 - Toole Seminary - 2024_leecragun.rvt

bhd ARCHITECTS
www.bhdarchitects.com
Phone 801.571.0010
Fax 801.571.0303
Toll Free 888.571.0010
65 East Wadsworth Park Drive
Suite 205 Draper, Utah 84020

Matthew C. McBride No. 353093 3/28/24

ARW ENGINEERS
154 W. Vista Circle
Draper, Utah 84024
801.792.1888
arwengineers.com

THE CHURCH OF JESUS CHRIST OF LATTER-DAY SAINTS

Tooele UT Deseret Peak Sr Seminary

Approximately 2234 North Berra Boulevard, Tooele, Utah
40.569694, -112.303347

Date: 3 Apr 2024
BHD #: 2326
County Parcel: 02-143-0-0115
Plan Series: Custom 5 CR
Owner #: 501-3450

Sheet Issue and Revision Schedule

#	Date	Description
1	3 Apr 2024	Bid Documents

Typical Details

S201

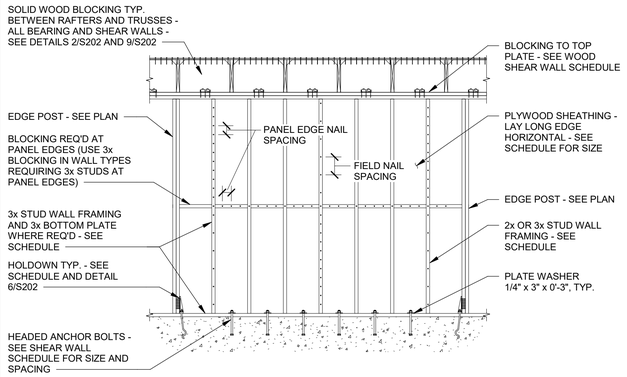

DETAIL 1/S202 (L)
SCALE : NONE

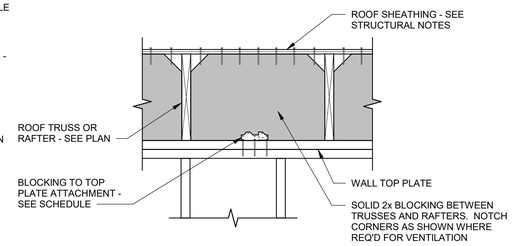

NOTE: FOR DEPTHS GREATER THAN 11-1/4" USE SOLID LSL BLOCKING BETWEEN RAFTERS.

DETAIL 2/S202 (L)
SCALE : NONE

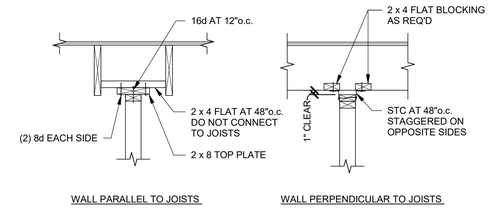

DETAIL 3/S202
SCALE : NONE

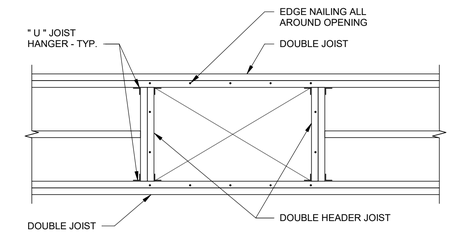

MAX. OPENING 4'-0" x 4'-0"

DETAIL 4/S202
SCALE : NONE

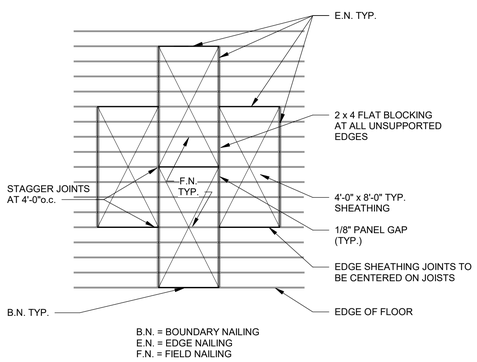

AT FLOOR

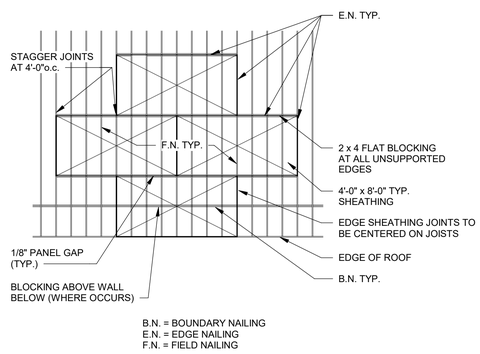

AT ROOF

TYP. SHEATHING LAYOUT 5/S202 (L)
SCALE : NONE

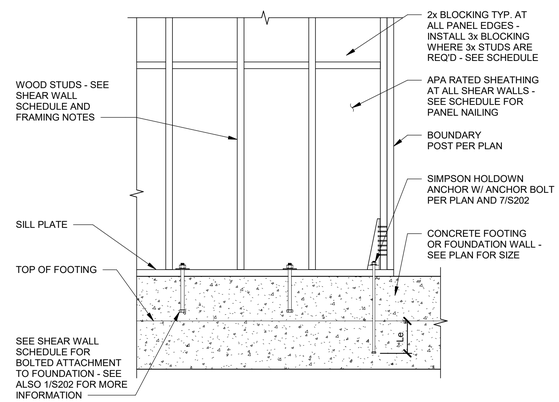

TYP. HOLD DOWN DETAIL 6/S202 (L)
SCALE : NONE

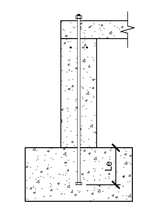

HOLDOWN SIZE	SIMPSON ANCHOR	MIN. EMBEDMENT DEPTH INTO FOOTING, "Le"
HDU2	PAB5	10"
HDU5	PAB5	10"
HDU8	PAB7	10"
HDU11	PAB8	12"

NOTE:
AT INTERIOR HOLDOWNS INTO SPOT FOOTINGS, ANCHOR SHALL BE PLACED IN CENTER OF FOOTINGS.

HOLDOWN EMBED SCHEDULE 7/S202 (L)
SCALE : NONE

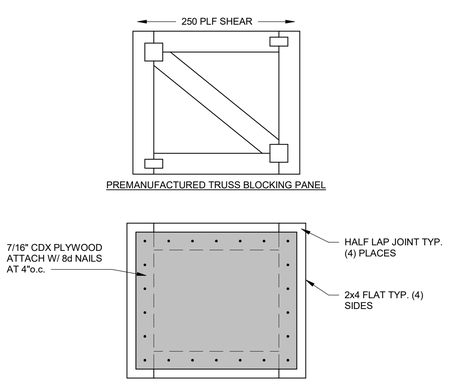

TRUSS BLOCKING PANELS 9/S202 (L)
SCALE : NONE

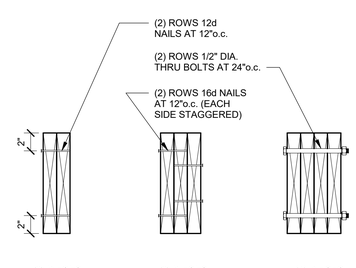

HEADER AND BEAM MEMBER CONNECTIONS 10/S202
SCALE : NONE

bhd ARCHITECTS
www.bhdarchitects.com
Phone 801.571.0010
Fax 801.571.0303
Toll Free 888.571.0010
65 East Wadsworth Park Drive
Suite 205 Draper, Utah 84020

Matthew C. McBride
No. 353993
3/28/24
STATE OF UTAH

ARW ENGINEERS
1954 W. Pierce Circle
Ogden, Utah 84404
+1 801.782.5868

THE CHURCH OF JESUS CHRIST OF LATTER-DAY SAINTS

Tooele UT Deseret Peak Sr Seminary

Approximately: 2234 North Berra Boulevard, Tooele, Utah
40.569694, -112.303347

Date: 3 Apr 2024
BHD #: 2326
County Parcel: 02-143-0-0115
Plan Series: Custom 5 CR
Owner #: 501-3450

Sheet Issue and Revision Schedule

#	Date	Description
1	3 Apr 2024	Bid Documents

Typical Details

S202

4/4/2024 11:01:38 AM

C:\Users\leec\OneDrive - ARW Engineers\Documents\S-23741 - Tooele Seminary - 2024_leecragun.rvt

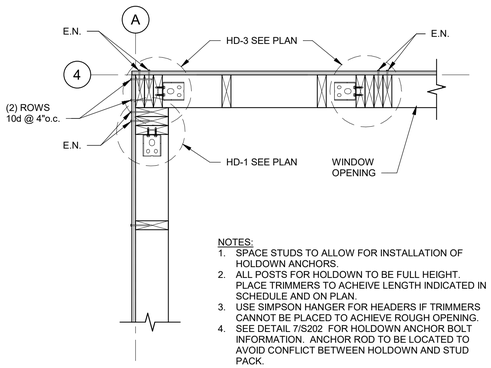

NOTES:
1. SPACE STUDS TO ALLOW FOR INSTALLATION OF HOLDOWN ANCHORS.
2. ALL POSTS FOR HOLDOWN TO BE FULL HEIGHT. PLACE TRIMMERS TO ACHEIVE LENGTH INDICATED IN SCHEDULE AND ON PLAN.
3. USE SIMPSON HANGER FOR HEADERS IF TRIMMERS CANNOT BE PLACED TO ACHIEVE ROUGH OPENING.
4. SEE DETAIL 7/S202 FOR HOLDOWN ANCHOR BOLT INFORMATION. ANCHOR ROD TO BE LOCATED TO AVOID CONFLICT BETWEEN HOLDOWN AND STUD PACK.

DETAIL 1/S203
SCALE : NONE

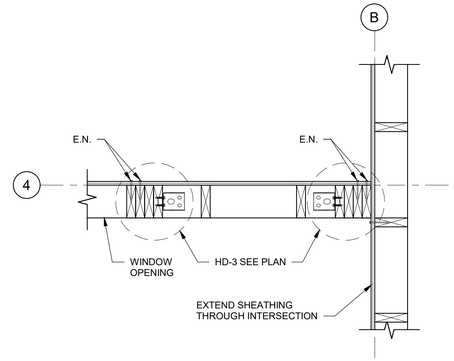

SEE NOTES ON 1/S203

DETAIL 2/S203
SCALE : NONE

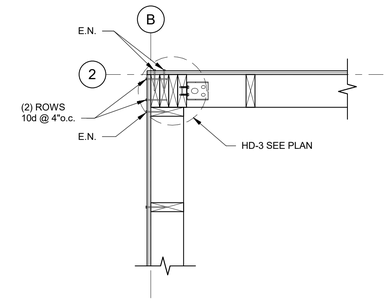

SEE NOTES ON 1/S203

DETAIL 3/S203
SCALE : NONE

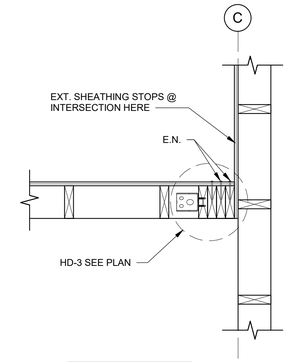

SEE NOTES ON 1/S203

DETAIL 4/S203
SCALE : NONE

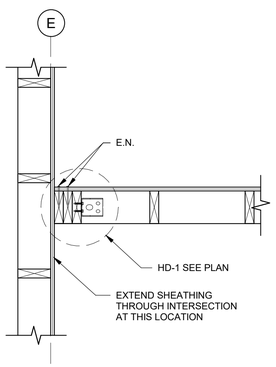

SEE NOTES ON 1/S203

DETAIL 5/S203
SCALE : NONE

4/4/2024 11:01:38 AM

bhd ARCHITECTS
www.bhdarchitects.com
Phone 801.571.0010
Fax 801.571.0303
Toll Free 888.571.0010
65 East Wadsworth Park Drive
Suite 205 Draper, Utah 84020

PROFESSIONAL STRUCTURAL ENGINEER
Matthew C. McBride
No. 353093
3/28/24
STATE OF UTAH

ARW ENGINEERS
1594 W. Pierce Circle
Draper, Utah 84021
t: 801.768.1988
arwengineers.com

THE CHURCH OF
JESUS CHRIST
OF LATTER-DAY SAINTS

Tooele UT Deseret Peak Sr Seminary

Approximately 2234 North Berra Boulevard, Tooele, Utah
40.569694, -112.303347

Date: 3 Apr 2024
BHD #: 2326
County Parcel: 02-143-0-0115
Plan Series: Custom 5 CR
Owner #: 501-3450

Sheet Issue and Revision Schedule

#	Date	Description
1	3 Apr 2024	Bid Documents

Details

S203

C:\Users\leec\OneDrive - ARW Engineers\Documents\S-23741 - Toole Seminary - 2024_leecragun.rvt

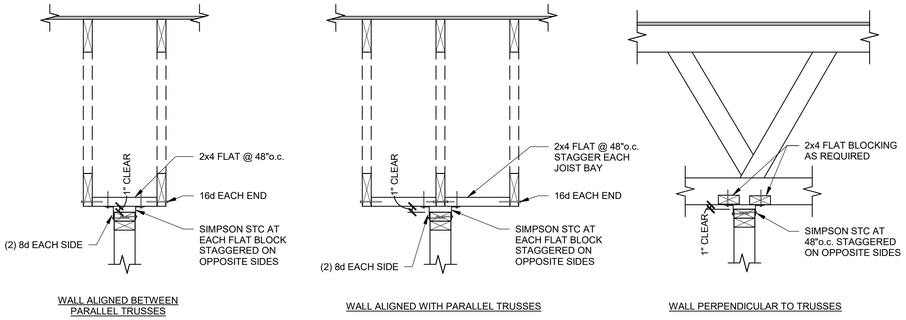

WALL ALIGNED BETWEEN PARALLEL TRUSSES

WALL ALIGNED WITH PARALLEL TRUSSES

WALL PERPENDICULAR TO TRUSSES

TYP. NON-BEARING WALL

SCALE : NONE

1
S204

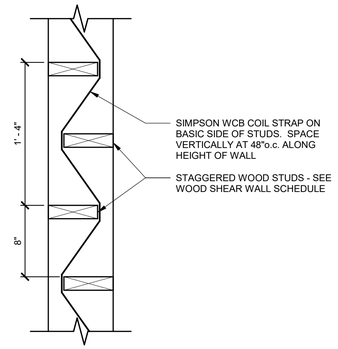

DETAIL

SCALE : NONE

2
S204

4/4/2024 11:01:38 AM

ARCHITECTS
www.bhdarchitects.com
Phone 801.571.0010
Fax 801.571.0303
Toll Free 888.571.0010
65 East Wadsworth Park Drive
Suite 205 Draper, Utah 84020

Matthew C. McBride
No. 353093
3/28/24

ARW ENGINEERS
1594 W. Pierce Circle
Draper, Utah 84484
801.792.1888
arwengineers.com

THE CHURCH OF
JESUS CHRIST
OF LATTER-DAY SAINTS

Tooele UT Deseret Peak Sr Seminary

Approximately 2234 North Berra Boulevard, Tooele, Utah
40.569694, -112.303347

Date: 3 Apr 2024
BHD #: 2326
County Parcel: 02-143-0-0115
Plan Series: Custom 5 CR
Owner #: 501-3450

Sheet Issue and Revision Schedule

#	Date	Description
1	3 Apr 2024	Bid Documents

Details

S204

C:\Users\leec\OneDrive - ARW Engineers\Documents\S-23741 - Tooele Seminary - 2024_leecragun.rvt

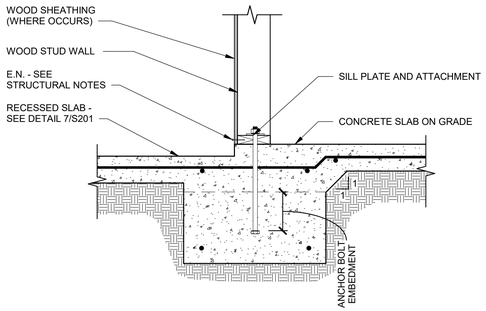

BEARING WALL DETAIL AT DEPRESSED SLAB

SCALE : NONE

1 S210 L

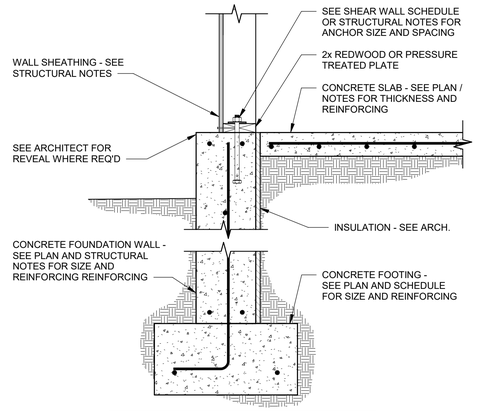

NOTE:
AT SIM CONDITION, CONCRETE SLAB IS RECESSED PER FOOTING AND FOUNDATION NOTES. MAINTAIN TOP OF CONCRETE FOUNDATION WALL @ FFE.

DETAIL

SCALE : NONE

2 S210 L

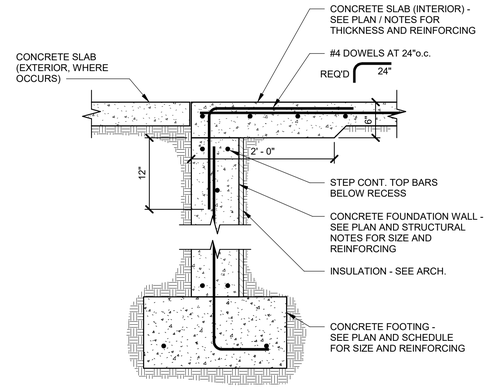

DETAIL

SCALE : NONE

3 S210

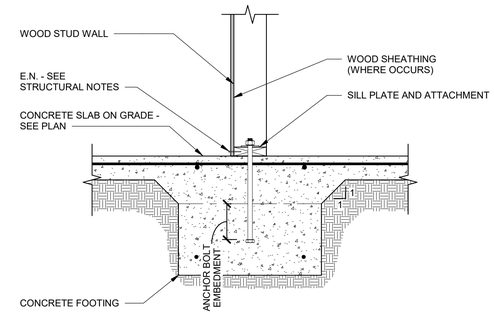

INTERIOR CONCRETE FOOTING

SCALE : NONE

4 S210 L

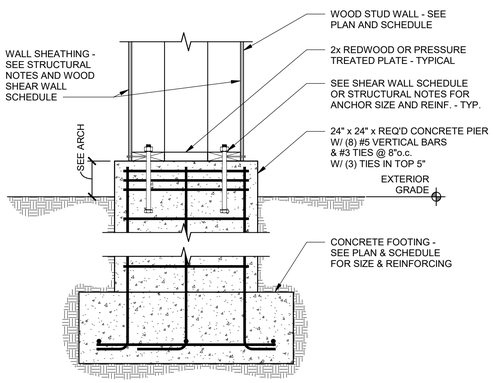

DETAIL

SCALE : NONE

5 S210 L

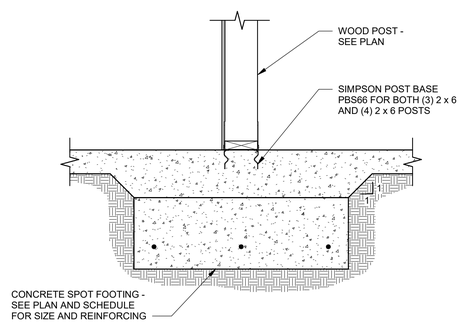

DETAIL

SCALE : NONE

6 S210

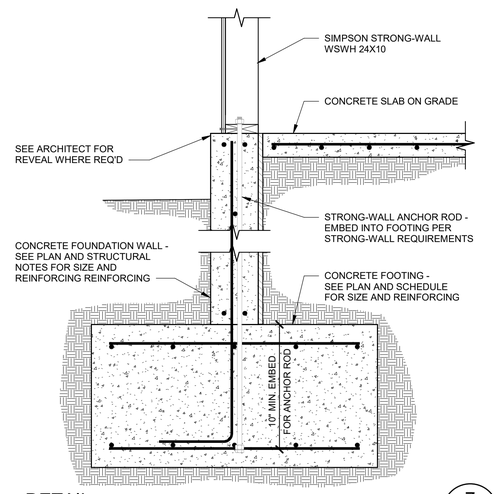

DETAIL

SCALE : NONE

7 S210

4/4/2024 11:01:39 AM

bhd ARCHITECTS
www.bhdarchitects.com
Phone 801.571.0010
Fax 801.571.0303
Toll Free 888.571.0010
65 East Wadsworth Park Drive
Suite 205 Draper, Utah 84020

STRUCTURAL Matthew C. McBride No. 153093 3/28/24 STATE OF UTAH

ARW ENGINEERS
1594 W. Pierce Circle
Ogden, Utah 84404
+1 801 782 8388
arwengineers.com

THE CHURCH OF JESUS CHRIST OF LATTER-DAY SAINTS

Tooele UT Deseret Peak Sr Seminary

Approximately 2234 North Berra Boulevard, Tooele, Utah
40.569694, -112.303347

Date: 3 Apr 2024
BHD #: 2326
County Parcel: 02-143-0-0115
Plan Series: Custom 5 CR
Owner #: 501-3450

Sheet Issue and Revision Schedule

#	Date	Description
1	3 Apr 2024	Bid Documents

Footing And Foundation Details

S210

C:\Users\leec\OneDrive - ARW Engineers\Documents\S-23741 - Toole Seminary - 2024_leecragun.rvt

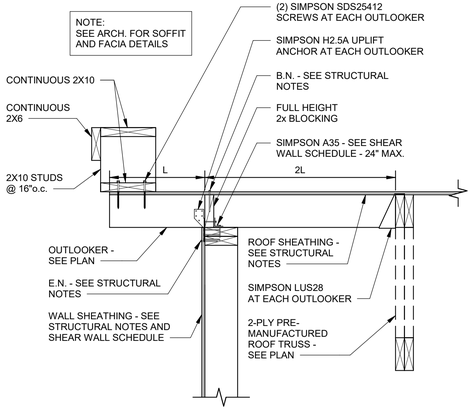

DETAIL 1 S220 L
SCALE : NONE

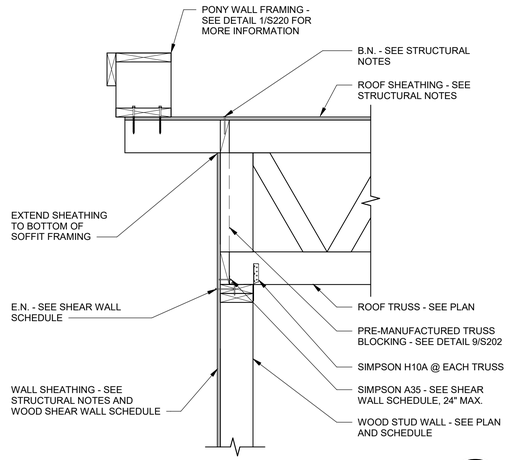

DETAIL 2 S220 L
SCALE : NONE

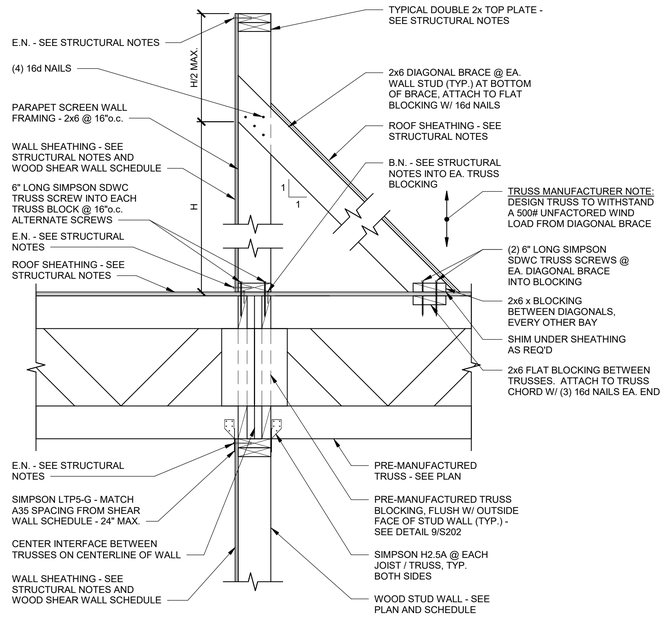

DETAIL 3 S220 L
SCALE : NONE

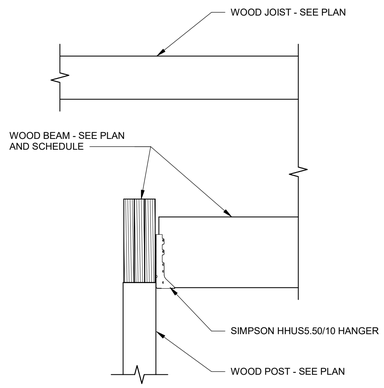

DETAIL 4 S220
SCALE : NONE

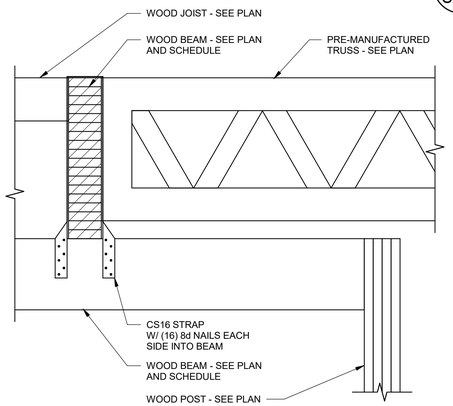

DETAIL 5 S220 L
SCALE : NONE

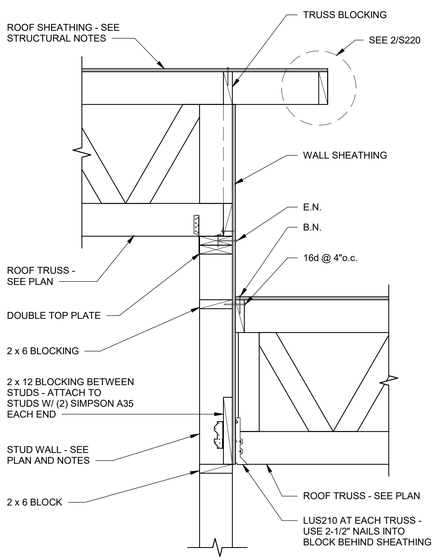

DETAIL 8 S220 L
SCALE : NONE

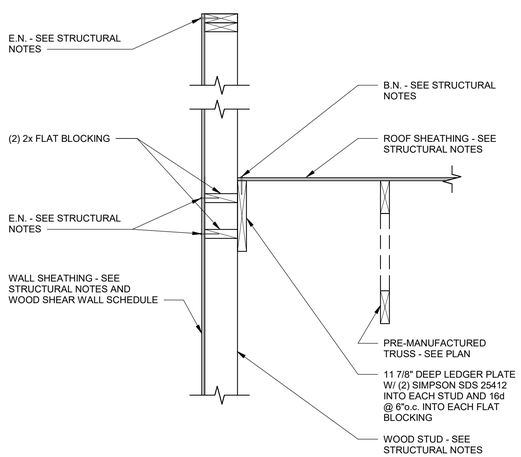

DETAIL 9 S220 L
SCALE : NONE

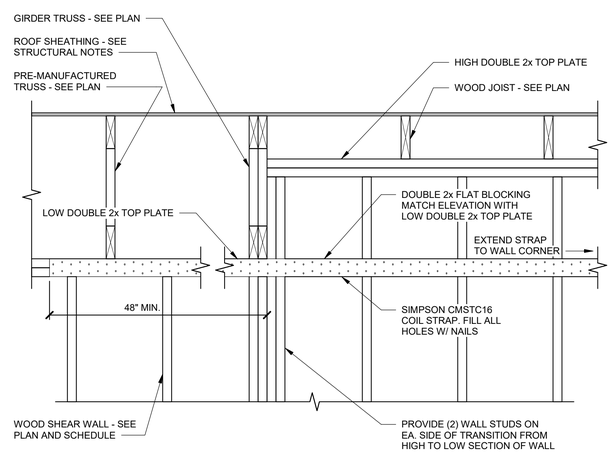

DETAIL 10 S220 L
SCALE : NONE

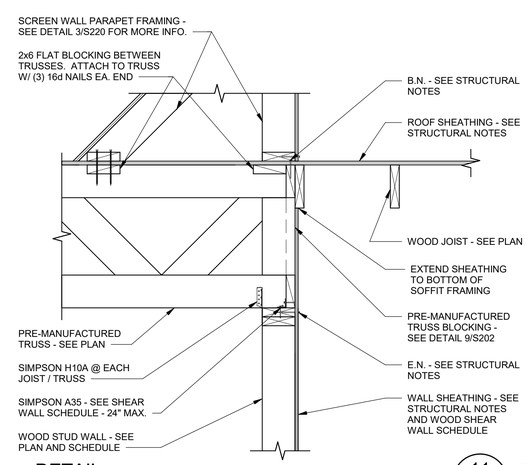

DETAIL 11 S220 L
SCALE : NONE

bhd ARCHITECTS
www.bhdarchitects.com
Phone 801.571.0010
Fax 801.571.0303
Toll Free 888.571.0010
65 East Wadsworth Park Drive
Suite 205 Draper, Utah 84020

PROFESSIONAL STRUCTURAL ENGINEER Matthew C. McBride No. 353893 3/28/24 STATE OF UTAH

ARW ENGINEERS
1594 W. Pierce Circle
Ogden, Utah 84404
+1 801.782.1888
arwengineers.com

THE CHURCH OF JESUS CHRIST OF LATTER-DAY SAINTS

Tooele UT Deseret Peak Sr Seminary

Approximately: 2234 North Bero Boulevard, Tooele, Utah
40.569694, -112.303347

Date: 3 Apr 2024
BHD #: 2326
County Parcel: 02-143-0-0115
Plan Series: Custom 5 CR
Owner #: 501-3450

Sheet Issue and Revision Schedule

#	Date	Description
1	3 Apr 2024	Bid Documents

Details

S220

4/4/2024 11:01:39 AM

C:\Users\leec\OneDrive - ARW Engineers\Documents\S-23741 - Tooele Seminary - 2024_leecragun.rvt

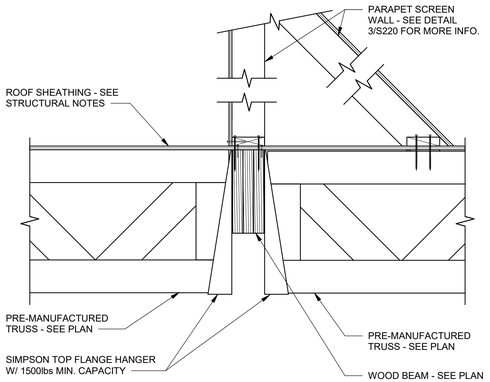

DETAIL 1 S221 L
SCALE : NONE

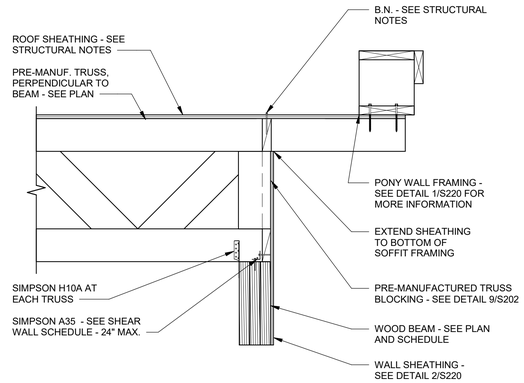

DETAIL 2 S221 L
SCALE : NONE

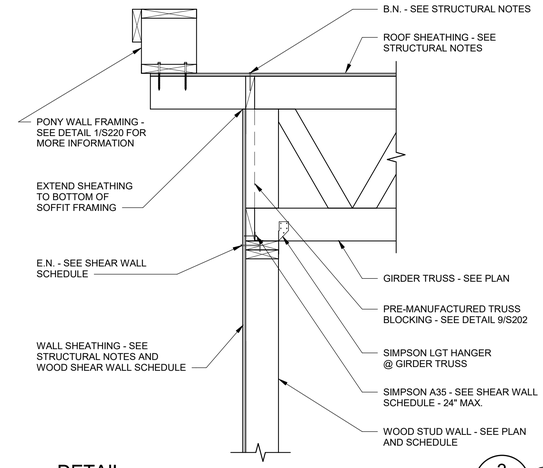

DETAIL 3 S221 L
SCALE : NONE

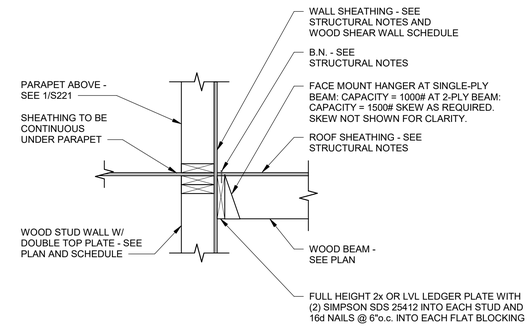

DETAIL 4 S221
SCALE : NONE

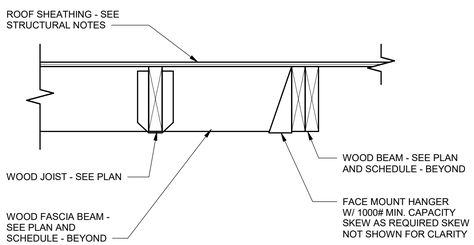

DETAIL 5 S221
SCALE : NONE

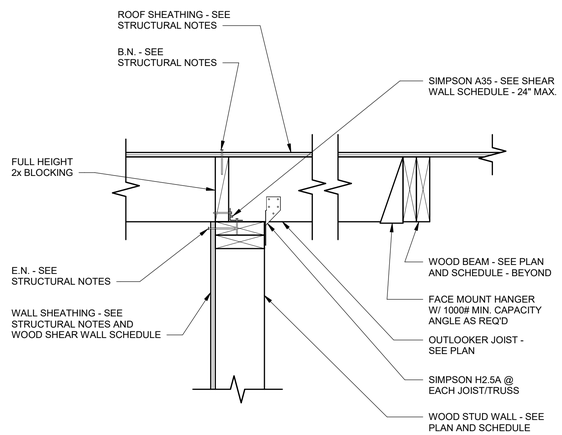

DETAIL 6 S221 L
SCALE : NONE

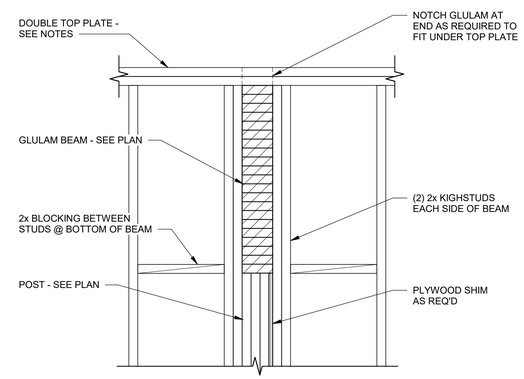

DETAIL 7 S221
SCALE : NONE

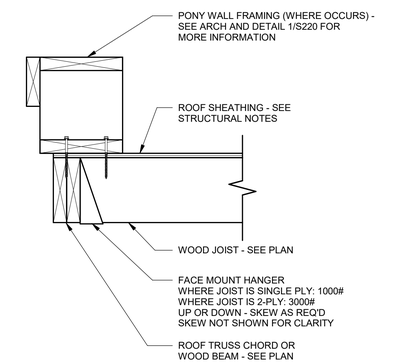

NOTE: OMIT PONY WALL FRAMING AT SIM. CONDITION.

DETAIL 8 S221
SCALE : NONE

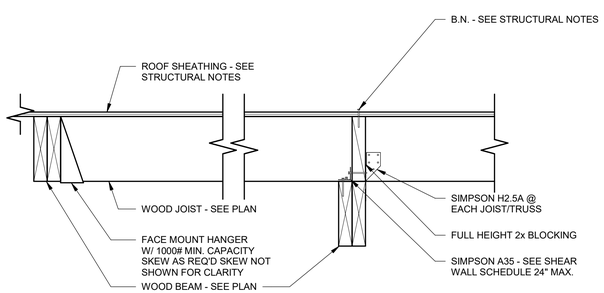

DETAIL 9 S221 L
SCALE : NONE

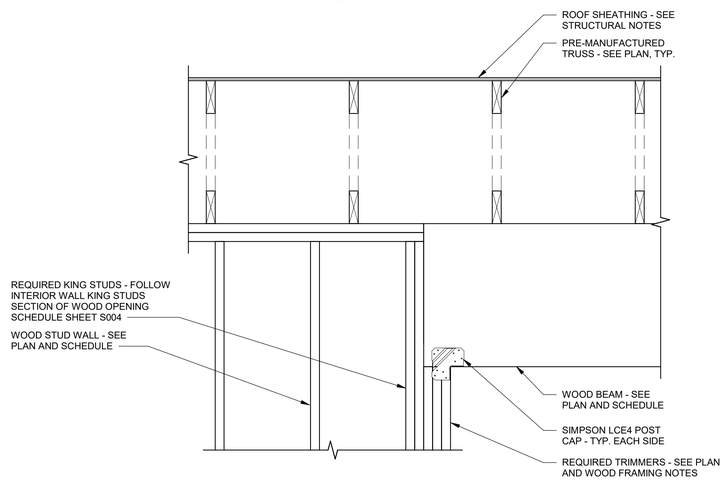

DETAIL 10 S221
SCALE : NONE

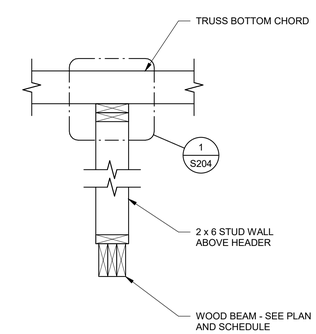

TYP. NON-BEARING WALL 11 S221
SCALE : NONE

bhd ARCHITECTS
www.bhdarchitects.com
Phone 801.571.0010
Fax 801.571.0303
Toll Free 888.571.0010
65 East Wadsworth Park Drive
Suite 205 Draper, Utah 84020

Matthew C. McBride
No. 353893
3/28/24

ARW ENGINEERS
1792 W. Pierce Circle
Draper, Utah 84484
801.792.1888

THE CHURCH OF JESUS CHRIST OF LATTER-DAY SAINTS

Tooele UT Deseret Peak Sr Seminary

Approximately 2234 North Berra Boulevard, Tooele, Utah
40.565694, -112.303347

Date: 3 Apr 2024
BHD #: 2326
County Parcel: 02-143-0-0115
Plan Series: Custom 5 CR
Owner #: 501-3450

Sheet Issue and Revision Schedule

#	Date	Description
1	3 Apr 2024	Bid Documents

Details

S221

4/4/2024 11:01:39 AM

C:\Users\leec\OneDrive - ARW Engineers\Documents\S-23741 - Toole Seminary - 2024_leecragun.rvt

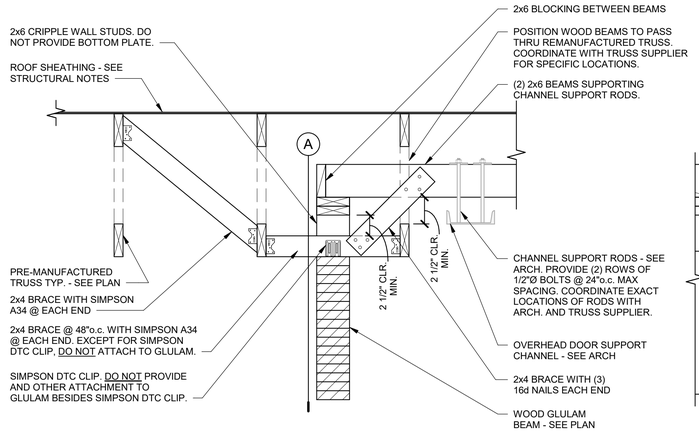

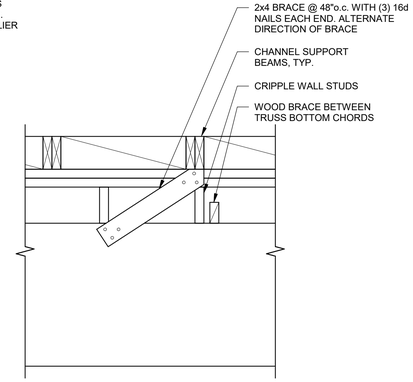

SECTION A

DETAIL 1/S222
SCALE : NONE

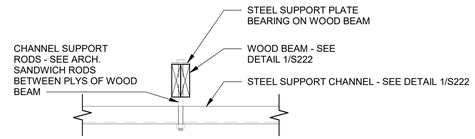

DETAIL 2/S222
SCALE : NONE

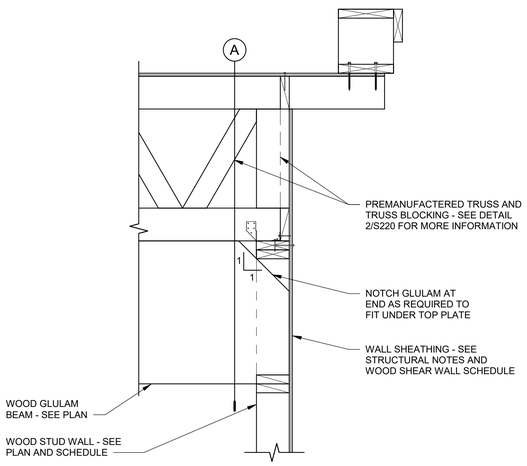

DETAIL 3/S222
SCALE : NONE

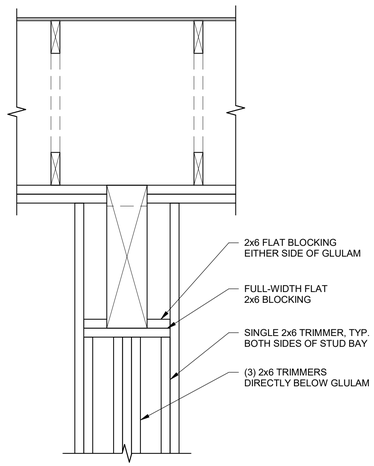

SECTION A

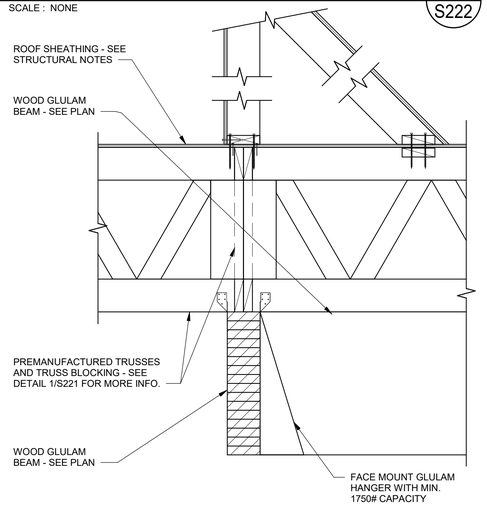

DETAIL 4/S222
SCALE : NONE

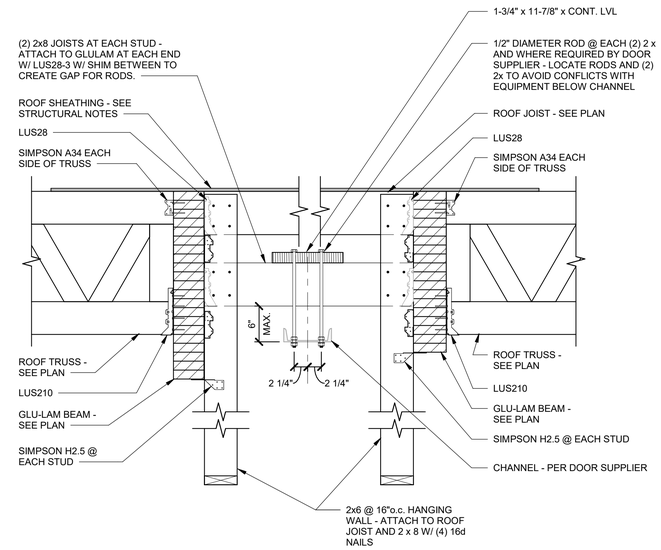

DETAIL 5/S222
SCALE : NONE

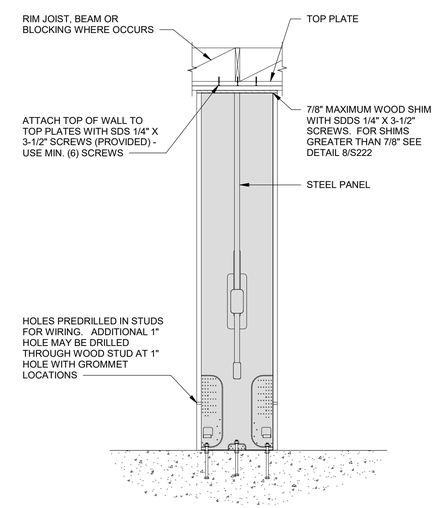

STRONG-WALL ELEVATION 6/S222
SCALE : NONE

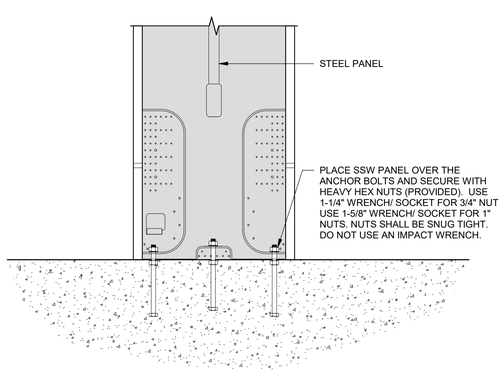

STRONG-WALL ANCHORAGE TO CONCRETE 7/S222
SCALE : NONE

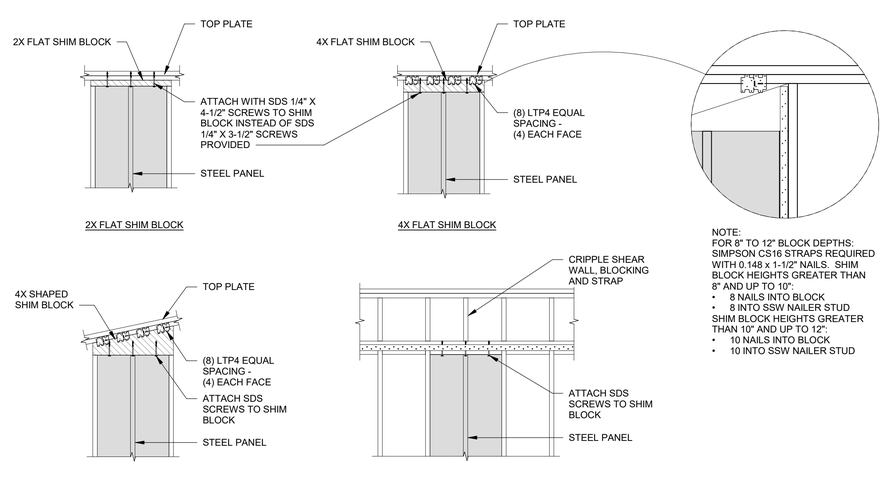

2X FLAT SHIM BLOCK

4X FLAT SHIM BLOCK

RAKE WALL

CRIPPLE WALL

NOTE:
FOR 8" TO 12" BLOCK DEPTHS:
SIMPSON CS16 STRAPS REQUIRED WITH 0.148 x 1-1/2" NAILS. SHIM BLOCK HEIGHTS GREATER THAN 8" AND UP TO 10":
- 8 NAILS INTO BLOCK
- 8 INTO SSW NAILER STUD

SHIM BLOCK HEIGHTS GREATER THAN 10" AND UP TO 12":
- 10 NAILS INTO BLOCK
- 10 INTO SSW NAILER STUD

DETAIL 8/S222
SCALE : NONE

4/4/2024 11:01:40 AM

C:\Users\leec\OneDrive - ARW Engineers\Documents\S-23741 - Tooele Seminary - 2024_leecragun.rvt

bhd ARCHITECTS
www.bhdarchitects.com
Phone 801.571.0010
Fax 801.571.0303
Toll Free 888.571.0010
65 East Wadsworth Park Drive
Suite 205 Draper, Utah 84020

PROFESSIONAL STRUCTURAL ENGINEER Matthew C. McBride No. 353893 3/28/24 STATE OF UTAH

ARW ENGINEERS
154 W. Pierce Circle
Ogden, Utah 84404
+1 801.782.5566
ownagent@arw.com

THE CHURCH OF JESUS CHRIST OF LATTER-DAY SAINTS

Tooele UT Deseret Peak Sr Seminary

Approximately 2734 North Berra Boulevard, Tooele, Utah
40.569694, -112.303347

Date: 3 Apr 2024
BHD #: 2326
County Parcel: 02-143-0-0115
Plan Series: Custom 5 CR
Owner #: 501-3450

Sheet Issue and Revision Schedule

#	Date	Description
1	3 Apr 2024	Bid Documents

Details

S222

4/8/2024 11:48:01 AM

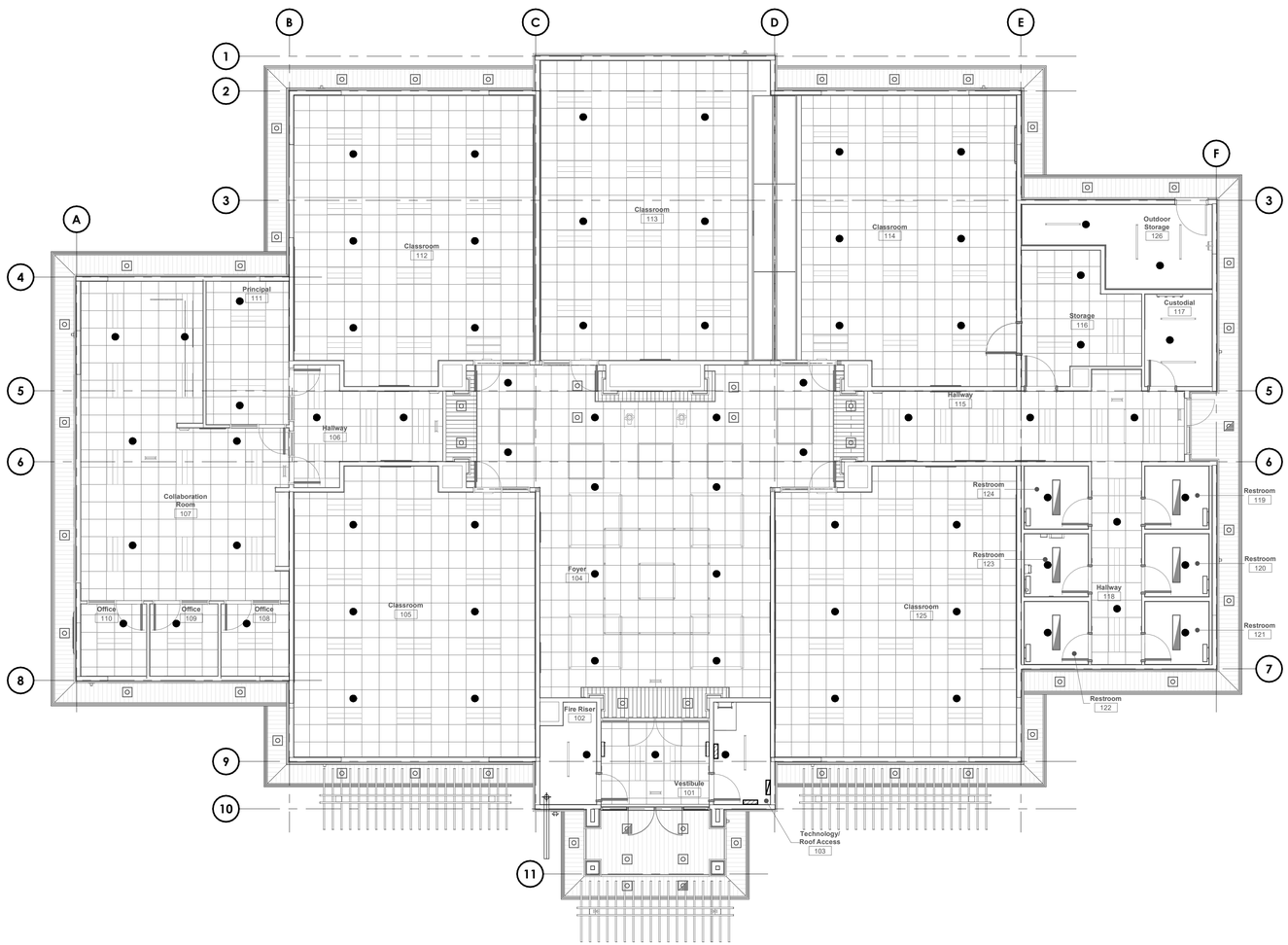

1 Fire Protection Plan
SCALE: 1/8" = 1'-0"

GENERAL SHEET NOTES

1 THIS PROJECT INCLUDES THE INSTALLATION OF A NEW FIRE SPRINKLER SYSTEM THROUGHOUT THE NEW BUILDING. DESIGN SHALL FOLLOW IBC, IFC, NFPA13, NFPA 24, CURRENTLY ADOPTED EDITIONS.

2 THESE DOCUMENTS ARE FOR SUBMITTAL REVIEW AND COORDINATION AND MAY BE USED BY THE CONTRACTOR AS A DESIGN BASIS FOR INSTALLATION DRAWINGS. THE FIRE SPRINKLER CONTRACTOR SHALL PROVIDE INSTALLATION DRAWINGS FOR REVIEW AND APPROVAL PRIOR TO INSTALLATION.

3 CONTRACTOR IS RESPONSIBLE FOR FINAL INSTALLATION DESIGN, INCLUDING HYDRAULIC CALCULATIONS, AND SHALL BE COORDINATED PRIOR TO FABRICATION. DESIGNER SHALL BE A MINIMUM NICET LEVEL III TECHNICIAN OR LICENSED FIRE PROTECTION ENGINEER AND SHALL OVERSEE THE INSTALLATION OF EQUIPMENT. MAJOR CONFLICTS SHALL BE BROUGHT TO THE ATTENTION OF THE GENERAL CONTRACTOR, ARCHITECT, AND ENGINEER OF RECORD FOR RESOLUTION.

4 COMPONENTS AND ASSEMBLIES SHALL BE U.L. LISTED AND FM APPROVED.

5 THE FIRE SPRINKLER CONTRACTOR SHALL COORDINATE WITH THE FIRE ALARM CONTRACTOR AND OTHER TRADES FOR PROVISION OF CONNECTIONS BETWEEN THEIR RESPECTIVE SYSTEMS. MONITORING OF THE FIRE SPRINKLER SYSTEM SHALL BE PROVIDED BY THE FIRE ALARM CONTRACTOR.

6 THE PROJECT SHALL BE PROTECTED BY A HYDRAULICALLY DESIGNED WET PIPE SPRINKLER SYSTEM.

7 THE SOURCE OF WATER FOR THE SPRINKLER SYSTEMS SHALL BE THE NEW FIRE SPRINKLER RISER AND FIRE LINE.

8 SPRINKLER SYSTEM CONTROL VALVES SHALL BE PROVIDED WITH SUPERVISORY TAMPER SWITCHES MONITORED BY THE FIRE ALARM SYSTEM.

9 THE FIRE DEPARTMENT CONNECTION SHALL BE LOCATED NOT LESS THAN 18 IN. OR MORE THAN 48 IN ABOVE THE LEVEL OF THE ADJOINING GROUND, SIDEWALK, OR GRADE SURFACE. THE FIRE DEPARTMENT CONNECTION SHALL BE LOCATED WITHIN 75 FT OF A FIRE HYDRANT. EACH FIRE DEPARTMENT CONNECTION (FDC) SHALL BE DESIGNATED BY A SIGN HAVING LETTERS, AT LEAST 1 IN. IN HEIGHT, THAT READS "AUTOMATIC SPRINKLERS" ALONG WITH A SIGN THAT INDICATES THE HYDRAULIC DESIGN INFORMATION AND PRESSURE REQUIRED AT THE INLETS TO DELIVER THE SYSTEM DEMAND.

10 PROVIDE FIRESTOPPING AT PENETRATIONS IN FIRE RATED CONSTRUCTION AND CAULKING AT PENETRATIONS OF FIRE OR SMOKE-RATED SEPARATIONS.

11 ALL SPRINKLERS IN AREAS WITH CEILINGS SHALL BE QUICK RESPONSE WHITE CONCEALED PENDENT TYPE. COMBUSTIBLE CONCEALED SPACES SHALL USE BRASS UPRIGHTS. REVIEW COMPLETE PLANS FOR ATTIC SPACES REQUIRING SPRINKLER COVERAGE.

bhd ARCHITECTS
www.bhdarchitects.com
Phone 801.571.0010
Fax 801.571.0303
Toll Free 888.571.0010
65 East Wadsworth Park Drive
Suite 205 Draper, Utah 84020

LICENSED PROFESSIONAL ENGINEER
No. 265949-2202
Jeffrey D. DuBois
04/08/2024
STATE OF UTAH

SPECTRUM ENGINEERS
324 S. State St., Suite 400
Salt Lake City, UT 84111
800-678-7077
801-328-5151
fax: 801-328-5155
www.spectrum-engineers.com

THE CHURCH OF JESUS CHRIST OF LATTER-DAY SAINTS

Tooele UT Deseret Peak Sr Seminary

Approximately: 2234 North Bero Boulevard, Tooele, Utah
40.569694, -112.303347

Date: 3 Apr 2024
BHD #: 2326
County Parcel: 02-143-0-0115
Plan Series: Custom 5 CR
Owner #: 501-3450

Sheet Issue and Revision Schedule

#	Date	Description
1	3 Apr 2024	Bid Documents

Fire Protection Plan

FX101

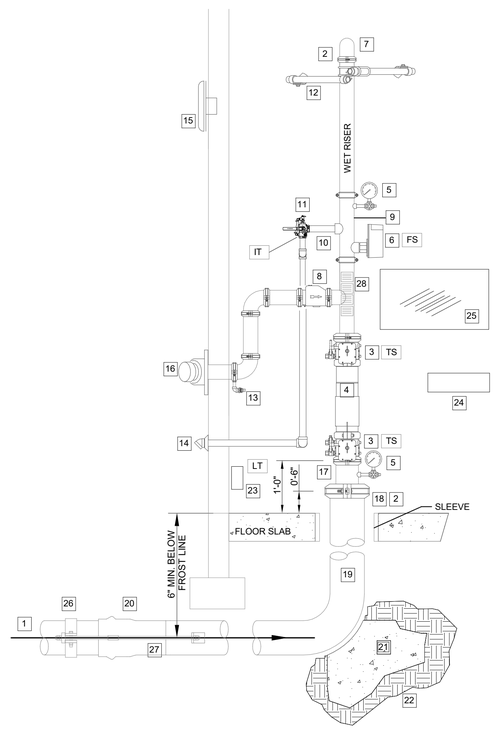

1 RISER SCHEMATIC (W BFP - NO PRV)

SCALE: 1" = 1'-0"

WET RISER DETAIL KEYED NOTES:

1. WATER SUPPLY FROM CITY WATER MAIN. SEE SITE UTILITY PLAN FOR CONTINUATION.
2. FLEXIBLE GROOVED PIPE COUPLING WHEN SEISMIC BRACING IS REQUIRED. SEE NOTE #12.
3. GROOVED BUTTERFLY VALVE WITH INTEGRAL SUPERVISORY SWITCH
4. DOUBLE CHECK BACKFLOW PREVENTER WITH RELATED TRIM AND GAUGES
5. 31/2" DIAMETER WATER GAUGE WITH 1/4" TEST AND ISOLATION VALVE.
6. VANE TYPE WATER FLOW SWITCH
7. SUPPLY TO WET PIPE FIRE SPRINKLER SYSTEM
8. SWING CHECK VALVE
9. RISER MANIFOLD - INCLUDES PRESURE GAUGE, FLOW SWITCH, PRESSURE RELIEF VALVE, AND TEST AND MAIN DRAIN DEVICE.
10. INSPECTOR'S TEST & DRAIN VALVE - PIPE TO OUTSIDE.
11. PRESSURE RELIEF VALVE - REQUIRED - SET AT 175 PSI.
12. SEISMIC BRACING REQUIRED IN SEISMIC DESIGN CATEGORY C, D, E, F. SEE DESIGN CRITERIA SCHEDULE ON SHEET S601.
13. 1/2" AUTOMATIC BALL DRIP VALVE
14. DRAIN PIPING TO OUTSIDE WITH GALVANIZED PIPE, 45 ELL, AND 1-PCE GALV. COLLAR.
15. WEATHERPROOF VOICE ALARM/STROBE (OUTSIDE)
16. OUT TO FIRE DEPARTMENT CONNECTION WITH GALVANIZED SCH 40 PIPING- PROVIDE BALL DRIP WHEN TRAPPING PIPE. SIZE CONNECTION AS REQUIRED.
    16.1. NOTE: PIPE FDC TO REMOTE LOCATION WHEN REQUIRED BY FIRE MARSHAL.
17. GALVANIZED SPOOL PIECE WITH PRESSURE GAUGE.
18. REDUCING GROOVED COUPLING OR CONCENTRIC GROOVED REDUCER.
19. AMES STAINLESS STEEL "IN-BUILDING-RISER" ,NO SUBSTITUTIONS, MINIMUM 6 INCH.
20. TYTON JOINT PIPE CONNECTION WITH GASKET.
21. CONCRETE THRUST BLOCK WITH 8 SQ. FEET HORIZONTAL BEARING AREA (MIN).
22. UNDISTURBED EARTH
23. LOW TEMPERATURE SENSOR - MOUNTED ON WALL - THIS SENSOR IS PROVIDED UNDER DIVISION 28 OF THE SPECIFICATIONS.
24. SPARE HEAD CABINET WITH SPARE SPRINKLER HEADS AND WRENCHES.
25. LAMINATED SYSTEM MAP WITH SYSTEM START-UP AND SHUT-DOWN INSTRUCTIONS.
26. GALVANIZED STEEL PIPE RETAINER CLAMP.
27. GALVANIZED STEEL RODS, SIZE PER NFPA 24, TO INCLUDE WASHERS, ROD COUPLINGS, AND ALL-THREAD RODS WITH DOUBLE HEX NUTS.
28. HYDRAULIC CALCULATION PLACARDS

GENERAL NOTES:

1. PROVIDE SLEEVES WHERE PIPING PENETRATES BUILDING AT FLOOR AND WALLS. SEAL AROUND PENETRATION WITH FLEXIBLE MASTIC AT FLOOR. PROVIDE 2" ANNULAR SPACE AROUND PIPE.
2. ALL BURIED STEEL COMPONENTS SHALL BE PROTECTED FROM CORROSION BY THE TAR AND WRAPPED METHOD. GALVANIZED COMPONENTS ARE NOT EXEMPT FROM THIS REQUIREMENT.

GENERAL SHEET NOTES

1 THIS PROJECT INCLUDES THE INSTALLATION OF A NEW FIRE SPRINKLER SYSTEM THROUGHOUT THE NEW BUILDING. DESIGN SHALL FOLLOW IBC, IFC, NFPA13, NFPA 24, CURRENTLY ADOPTED EDITIONS.

2 THESE DOCUMENTS ARE FOR SUBMITTAL REVIEW AND COORDINATION AND MAY BE USED BY THE CONTRACTOR AS A DESIGN BASIS FOR INSTALLATION DRAWINGS. THE FIRE SPRINKLER CONTRACTOR SHALL PROVIDE INSTALLATION DRAWINGS FOR REVIEW AND APPROVAL PRIOR TO INSTALLATION.

3 CONTRACTOR IS RESPONSIBLE FOR FINAL INSTALLATION DESIGN, INCLUDING HYDRAULIC CALCULATIONS, AND SHALL BE COORDINATED PRIOR TO FABRICATION. DESIGNER SHALL BE A MINIMUM NICET LEVEL III TECHNICIAN OR LICENSED FIRE PROTECTION ENGINEER AND SHALL OVERSEE THE INSTALLATION OF EQUIPMENT. MAJOR CONFLICTS SHALL BE BROUGHT TO THE ATTENTION OF THE GENERAL CONTRACTOR, ARCHITECT, AND ENGINEER OF RECORD FOR RESOLUTION.

4 COMPONENTS AND ASSEMBLIES SHALL BE U.L. LISTED AND FM APPROVED.

5 THE FIRE SPRINKLER CONTRACTOR SHALL COORDINATE WITH THE FIRE ALARM CONTRACTOR AND OTHER TRADES FOR PROVISION OF CONNECTIONS BETWEEN THEIR RESPECTIVE SYSTEMS. MONITORING OF THE FIRE SPRINKLER SYSTEM SHALL BE PROVIDED BY THE FIRE ALARM CONTRACTOR.

6 THE PROJECT SHALL BE PROTECTED BY A HYDRAULICALLY DESIGNED WET PIPE SPRINKLER SYSTEM.

7 THE SOURCE OF WATER FOR THE SPRINKLER SYSTEMS SHALL BE THE NEW FIRE SPRINKLER RISER AND FIRE LINE.

8 SPRINKLER SYSTEM CONTROL VALVES SHALL BE PROVIDED WITH SUPERVISORY TAMPER SWITCHES MONITORED BY THE FIRE ALARM SYSTEM.

9 THE FIRE DEPARTMENT CONNECTION SHALL BE LOCATED NOT LESS THAN 18 IN. OR MORE THAN 48 IN ABOVE THE LEVEL OF THE ADJOINING GROUND, SIDEWALK, OR GRADE SURFACE. THE FIRE DEPARTMENT CONNECTION SHALL BE LOCATED WITHIN 75 FT OF A FIRE HYDRANT. EACH FIRE DEPARTMENT CONNECTION (FDC) SHALL BE DESIGNATED BY A SIGN HAVING LETTERS, AT LEAST 1 IN. IN HEIGHT, THAT READS "AUTOMATIC SPRINKLERS" ALONG WITH A SIGN THAT INDICATES THE HYDRAULIC DESIGN INFORMATION AND PRESSURE REQUIRED AT THE INLETS TO DELIVER THE SYSTEM DEMAND.

10 PROVIDE FIRESTOPPING AT PENETRATIONS IN FIRE RATED CONSTRUCTION AND CAULKING AT PENETRATIONS OF FIRE OR SMOKE-RATED SEPARATIONS.

11 ALL SPRINKLERS IN AREAS WITH CEILINGS SHALL BE QUICK RESPONSE WHITE CONCEALED PENDENT TYPE. COMBUSTIBLE CONCEALED SPACES SHALL USE BRASS UPRIGHTS. REVIEW COMPLETE PLANS FOR ATTIC SPACES REQUIRING SPRINKLER COVERAGE.

bhd ARCHITECTS
www.bhdarchitects.com
Phone 801.571.0010
Fax 801.571.0303
Toll Free 888.571.0010
65 East Wadsworth Park Drive
Suite 205 Draper, Utah 84020

LICENSED PROFESSIONAL ENGINEER
No. 385949-2202
Jeffrey D. DuBois
04/08/2024
STATE OF UTAH

SPECTRUM ENGINEERS
324 S. State St., Suite 400
Salt Lake City, UT 84111
800-678-7077
801-328-5151
fax: 801-328-5155
www.spectrum-engineers.com

THE CHURCH OF JESUS CHRIST OF LATTER-DAY SAINTS

Tooele UT Deseret Peak Sr Seminary

Approximately 2234 North Berra Boulevard, Tooele, Utah
40.569994, -112.303347

Date: 3 Apr 2024
BHD #: 2326
County Parcel: 02-143-0-0115
Plan Series: Custom 5 CR
Owner #: 501-3450

Sheet Issue and Revision Schedule

#	Date	Description
1	3 Apr 2024	Bid Documents

Fire Protection Details

FX401

4/8/2024 3:51:43 PM

LEGEND

MEANING	SYMBOL OR ABBREVIATION	MEANING	SYMBOL OR ABBREVIATION	MEANING	SYMBOL OR ABBREVIATION
HOT WATER LINE		PRIMARY ROOF DRAIN	RD	WALL CLEANOUT	WCO
HOT WATER CIRCULATION LINE		OVERFLOW ROOF DRAIN	ORD	CLEANOUT TO GRADE	COTG
COLD WATER LINE		UNION		VENT THRU ROOF	VTR
VENT LINE		BALL VALVE		CIRCULATING PUMP OCCUPANCY SENSOR	
WASTE LINE		GAS LINE	G		

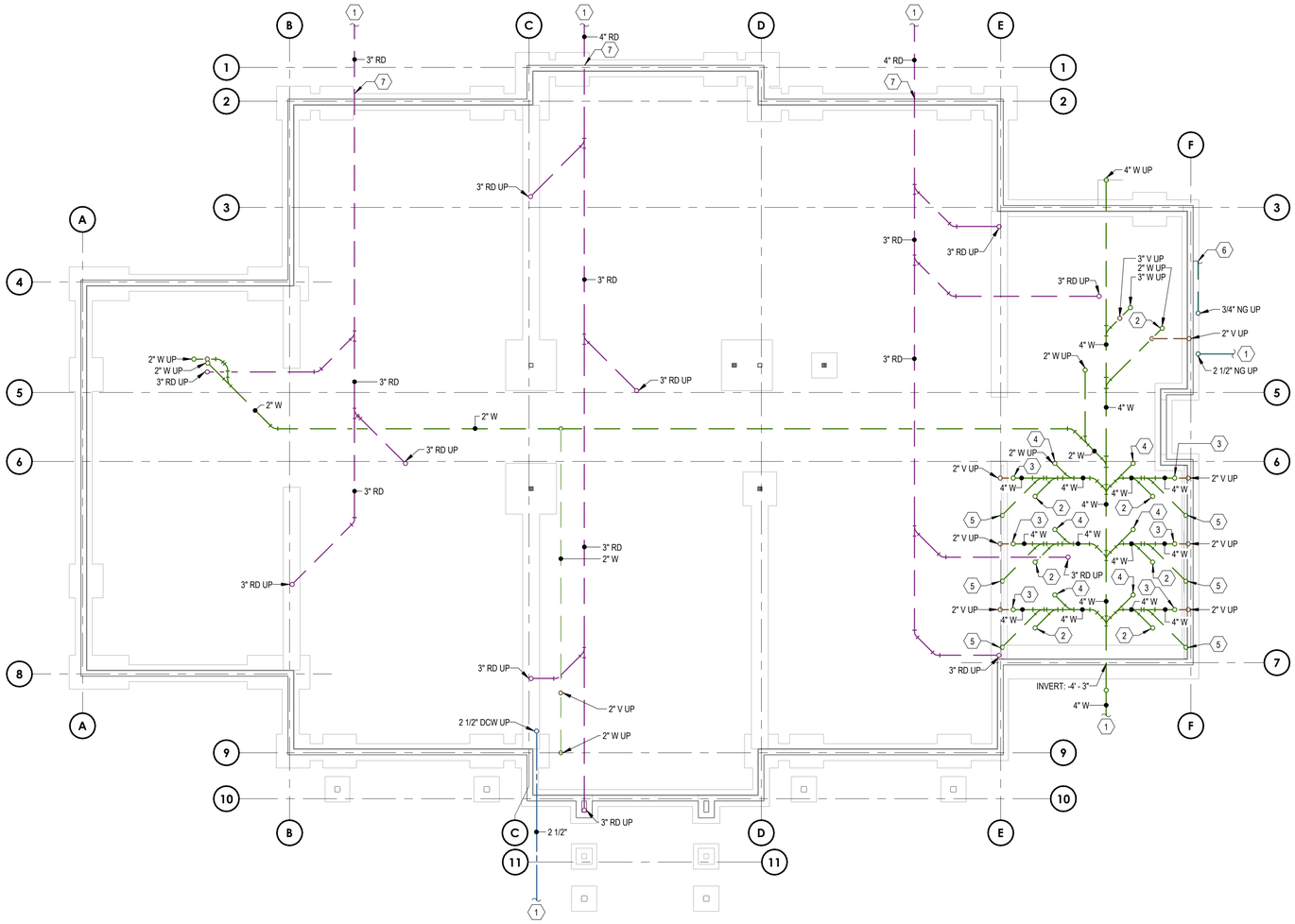

1 P100 UNDERFLOOR PLUMBING PLAN
1/8" = 1'-0"
0 4' 8' 16'

PLUMBING GENERAL NOTES

1 ALL PLUMBING SHALL COMPLY WITH THE MOST STRINGENT OF APPLICABLE CODES, ORDINANCES, OR THE SPECIFICATIONS.

2 PITCH UNDERFLOOR SANITARY WASTE PIPING AT 1/4" PER FOOT, UNLESS NOTED OTHERWISE.

3 PITCH UNDERFLOOR STORM PIPING 3" AND GREATER AT 1/8" PER FOOT, UNLESS NOTED OTHERWISE. PITCH ALL OTHER STORM PIPING AT 1/4" PER FOOT UNLESS OTHERWISE NOTED.

4 FIELD VERIFY LOCATION AND INVERTS OF SITE UTILITIES PRIOR TO INSTALLATION.

5 ROUTE DOMESTIC WATER, FIRE PROTECTION, SANITARY SEWER, AND STORM SEWER SERVICES TO SITE UTILITIES 5'-0" FROM BUILDING UNLESS NOTED OTHERWISE. REFER TO CIVIL PLANS.

6 WASTE AND VENT PIPING BELOW FLOOR AND THROUGH FLOOR SHALL BE 2" MINIMUM.

7 PROVIDE CLEANOUT IN ACCESSIBLE LOCATION AT THE BASE OF ALL PLUMBING RISERS.

8 ALL FIXTURES SHALL BE PROPERLY VENTED TO THE ATMOSPHERE.

9 WATER PIPING AND VENT PIPING SHALL BE RUN IN CEILING SPACE BELOW BUILDING INSULATION UNLESS OTHERWISE NOTED OR SHOWN.

10 WATER PIPING AND VENT PIPING SHALL BE RUN IN CEILING SPACE BELOW BUILDING INSULATION UNLESS OTHERWISE NOTED OR SHOWN.

11 GAS LINES TO BE RUN IN CEILING SPACE UNLESS OTHERWISE NOTED OR SHOWN.

12 WATER PIPING AND VENT PIPING SHALL BE RUN IN CEILING SPACE BELOW BUILDING INSULATION UNLESS OTHERWISE NOTED OR SHOWN.

13 DUE TO THE CLOSE PROXIMITY OF THE WATER, VENT, AND DRAIN PIPING AS WELL AS DUCTWORK, THE PLUMBING CONTRACTOR SHALL COORDINATE THE INSTALLATION WITH THE MECHANICAL AND SHEET METAL CONTRACTORS.

14 MINIMUM WATER PIPING UNDER CONCRETE SLAB SHALL BE 3/4"

KEYED NOTES

1 SEE SITE UTILITY PLAN FOR CONTINUATION.

2 2" WASTE UP TO FLOOR DRAIN. PROVIDE DEEP SEAL TRAP.

3 4" WASTE UP TO WATER CLOSET.

4 2" WASTE UP TO URINAL.

5 2" WASTE UP TO LAVATORY.

6 GAS LINE CONTINUES TO BBQ GRILL. PROVIDE SHUT OFF ON 3/4" LINE. SEE SITE PLAN FOR CONTINUATION.

7 MAXIMUM INVERT TO NO GREATER THAN 51" BELOW THE FINISHED FLOOR LEVEL. TYPICAL.

PLUMBING SHEET INDEX

bhd ARCHITECTS
www.bhdarchitects.com
Phone 801.571.0010
Fax 801.571.0303
Toll Free 888.571.0010
65 East Wadsworth Park Drive
Suite 205 Draper, Utah 84020

LICENSED PROFESSIONAL ENGINEER
04/05/2024
No. 190991
BENJAMIN L. DAVIS
STATE OF UTAH

181 East 5600 South
Murray, Utah 84107
O: (801)530-3148
www.vbfa.com
VBFA Project #: 240027
VBFA

THE CHURCH OF JESUS CHRIST OF LATTER-DAY SAINTS

Tooele UT Deseret Peak Sr Seminary

Approximately 2234 North Berra Boulevard, Tooele, Utah
40.569694, -112.303347

Date: 3 Apr 2024
BHD #: 2326
County Parcel: 02-143-0-0115
Plan Series: Custom 5 CR
Owner #: 501-3450

Drawing Issue and Revision Schedule

#	Date	Description
1	3 Apr 2024	Bid Documents

Underfloor Plumbing Plan

P100

4/8/2024 3:51:48 PM

KEYED NOTES

1. WATER MAIN HEADER. SEE DETAIL 1/P501.
2. EWH-1 TO BE INSTALLED UNDER CABINET. SEE DETAIL 7 ON P501.
3. 1.5" VENT LINES FROM FLOOR DRAIN AND SINK COMBINE 6" ABOVE FLOOD RIM LEVEL OF SINK IN THE WALL. VENT THROUGH ROOF AT A 3".

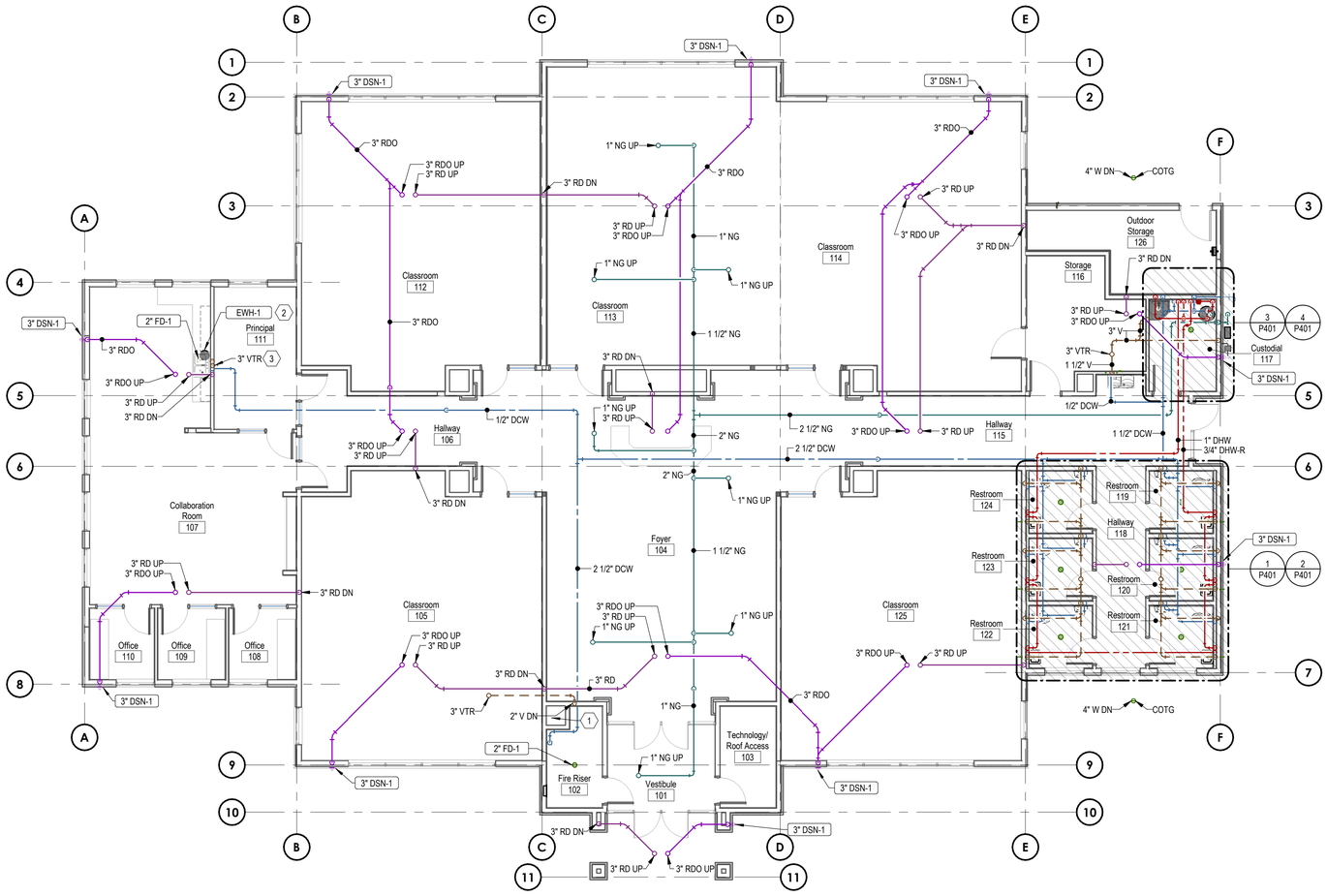

1 P101 LEVEL 1 PLUMBING PLAN
1/8" = 1'-0"
0 4' 8' 16'

bhd ARCHITECTS
www.bhdarchitects.com
Phone 801.571.0010
Fax 801.571.0303
Toll Free 888.571.0010
65 East Wadsworth Park Drive
Suite 205 Draper, Utah 84020

LICENSED PROFESSIONAL ENGINEER
04/05/2024
No. 190991
BENJAMIN L. DAVIS
STATE OF UTAH

181 East 5600 South
Murray, Utah 84107
O: (801)530-3148
www.vbfa.com
VBFA Project #: 240027
VBFA

THE CHURCH OF JESUS CHRIST OF LATTER-DAY SAINTS

Tooele UT Deseret Peak Sr Seminary

Approximately 2234 North Berra Boulevard, Tooele, Utah
40.569694, -112.303347

Date:	BHD #:	County Parcel:	Plan Series:	Owner #:
3 Apr 2024	2326	02-143-0-0115	Custom 5 CR	501-3450

Drawing Issue and Revision Schedule

#	Date	Description
1	3 Apr 2024	Bid Documents

Level 1 Plumbing Plan

P101

4/8/2024 3:51:51 PM

KEYED NOTES

1 RTU. SEE MECHANICAL SHEETS FOR MORE INFORMATION. TYPICAL.

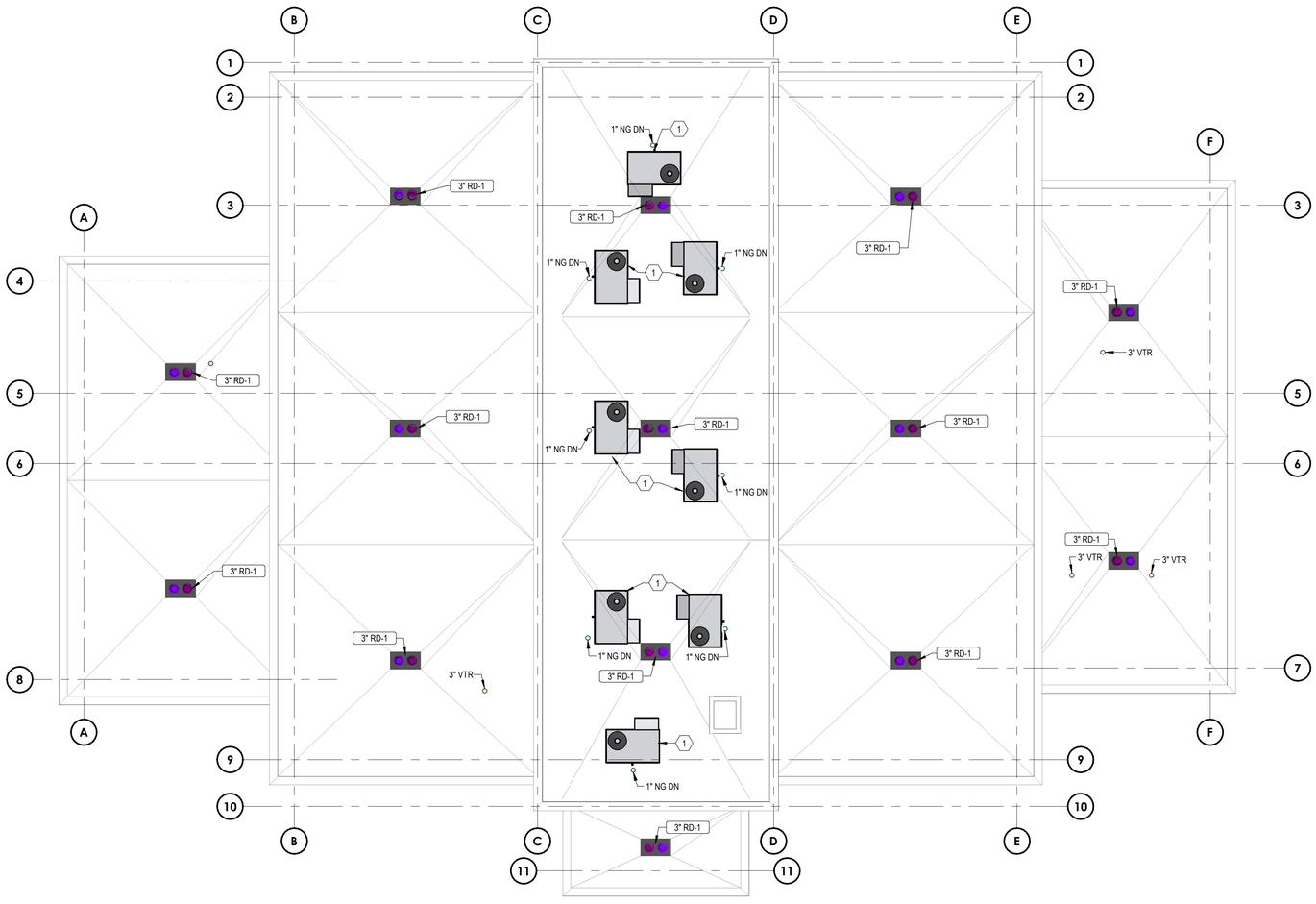

1 P102 ROOF PLUMBING PLAN
1/8" = 1'-0"
0 4' 8' 16'

NORTH

bhd ARCHITECTS
www.bhdarchitects.com
Phone 801.571.0010
Fax 801.571.0303
Toll Free 888.571.0010
65 East Wadsworth Park Drive
Suite 205 Draper, Utah 84020

LICENSED PROFESSIONAL ENGINEER
04/05/2024
No. 190991
BENJAMIN L. DAVIS
STATE OF UTAH

181 East 5600 South
Murray, Utah 84107
O: (801)530-3148
www.vbfa.com
VBFA Project #: 240027
VBFA

THE CHURCH OF
JESUS CHRIST
OF LATTER-DAY SAINTS

Tooele UT Deseret Peak Sr Seminary

Approximately: 2234 North Bero Boulevard, Tooele, Utah
40.569694, -112.303347

Date: 3 Apr 2024
BHD #: 2326
County Parcel: 02-143-0-0115
Plan Series: Custom 5 CR
Owner #: 501-3450

Drawing Issue and Revision Schedule

#	Date	Description
1	3 Apr 2024	Bid Documents

Roof Plumbing Plan

P102

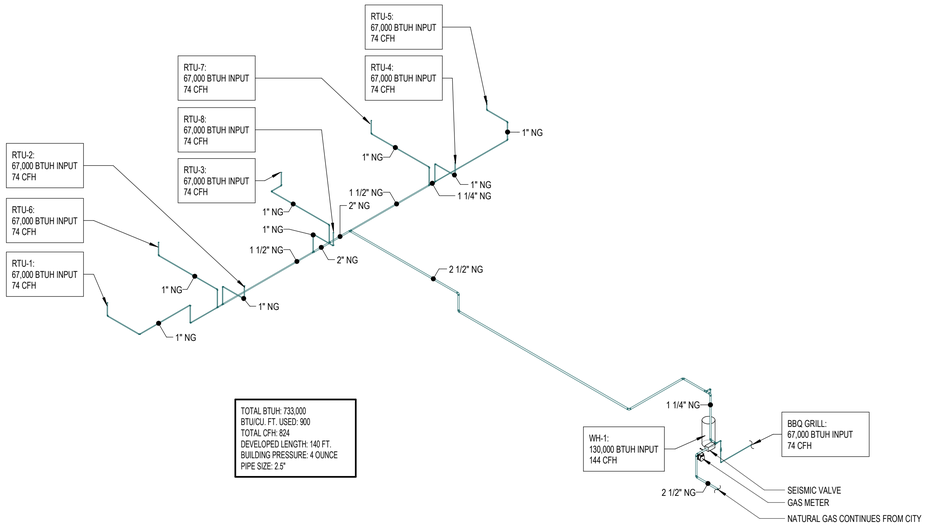

2 P301 Natural Gas Isometric View
NOT TO SCALE

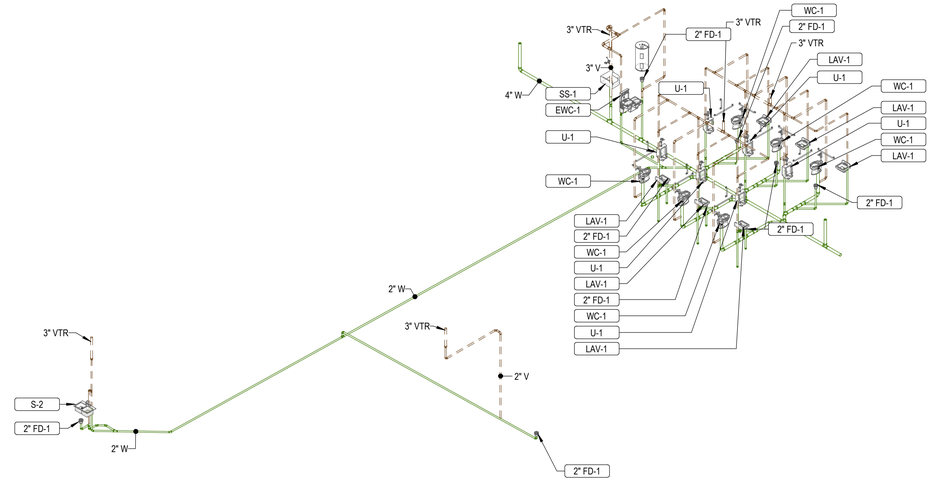

3 P301 Sanitary Waste And Vent Isometric View
NOT TO SCALE

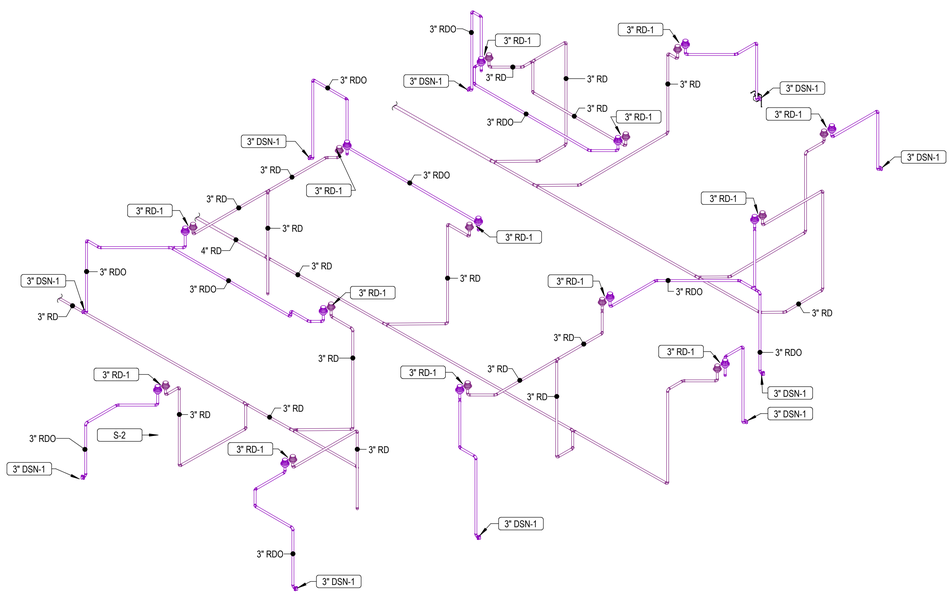

4 P301 Roof Drain Isometric View
NOT TO SCALE

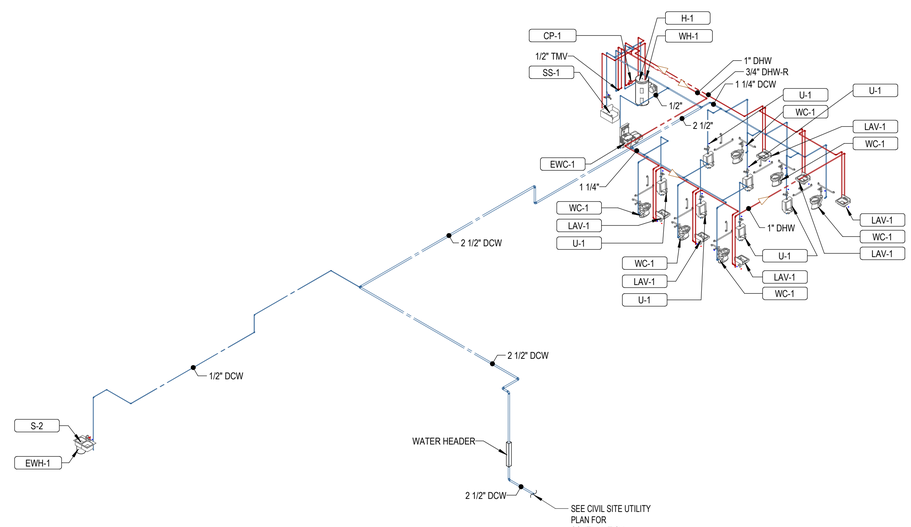

1 P301 Domestic Plumbing Isometric View
NOT TO SCALE

bhd ARCHITECTS
www.bhdarchitects.com
Phone 801.571.0010
Fax 801.571.0303
Toll Free 888.571.0010
65 East Wadsworth Park Drive
Suite 205 Draper, Utah 84020

LICENSED PROFESSIONAL ENGINEER
04/05/2024
No. 190991
BENJAMIN L. DAVIS
STATE OF UTAH

181 East 5600 South
Murray, Utah 84107
O: (801)530-3148
www.vbfa.com
VBFA Project #: 240027
VBFA

THE CHURCH OF
JESUS CHRIST
OF LATTER-DAY SAINTS

Tooele UT Deseret Peak Sr Seminary

Approximately 2234 North Berra Boulevard, Tooele, Utah
40.566694, -112.303347

Date: 3 Apr 2024
BHD #: 2326
County Parcel: 02-143-0-0115
Plan Series: Custom 5 CR
Owner #: 501-3450

Drawing Issue and Revision Schedule

#	Date	Description
1	3 Apr 2024	Bid Documents

Isometric Plumbing Plans

P301

4/8/2024 3:51:58 PM

KEYED NOTES

1. SEE DETAIL 5/P501.
2. HW CIRCULATING PUMP OCCUPANCY SENSOR AT CEILING. PROVIDE 1/2" CONDUIT FOR 12V HARD WIRING BACK TO CIRCULATING PUMP CONTROL BOX. REFER TO DETAIL 5/P501..

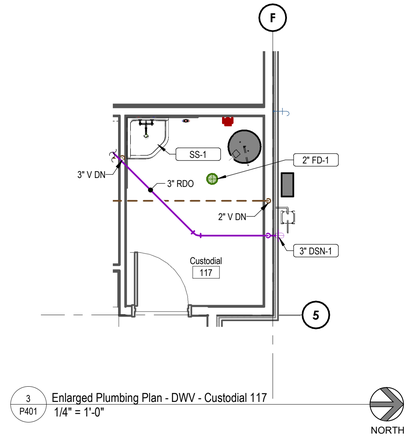

3 / P401 Enlarged Plumbing Plan - DWV - Custodial 117
1/4" = 1'-0"

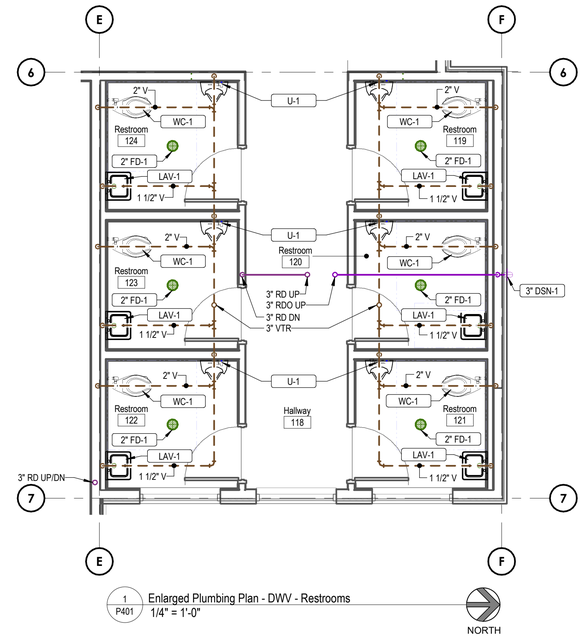

1 / P401 Enlarged Plumbing Plan - DWV - Restrooms
1/4" = 1'-0"

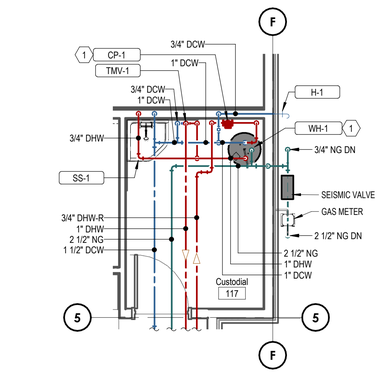

4 / P401 Enlarged Plumbing Plan - Domestic - Custodial 117
1/4" = 1'-0"

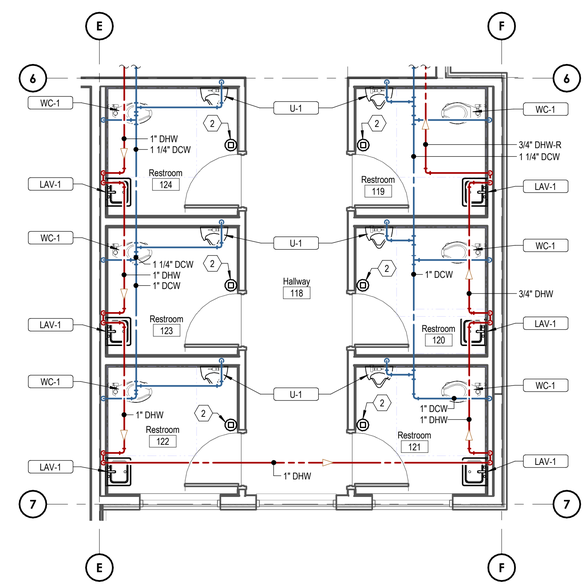

2 / P401 Enlarged Plumbing Plan - Domestic - Restrooms
1/4" = 1'-0"

bhd ARCHITECTS
www.bhdarchitects.com
Phone 801.571.0010
Fax 801.571.0303
Toll Free 888.571.0010
65 East Wadsworth Park Drive
Suite 205 Draper, Utah 84020

LICENSED PROFESSIONAL ENGINEER
04/05/2024
No. 190991
BENJAMIN L. DAVIS
STATE OF UTAH

181 East 5600 South
Murray, Utah 84107
O: (801)530-3148
www.vbfa.com
VBFA Project #: 240027
VBFA

THE CHURCH OF
JESUS CHRIST
OF LATTER-DAY SAINTS

Tooele UT Deseret Peak Sr Seminary

Approximately 2234 North Berra Boulevard, Tooele, Utah
40.566494, -112.303347

Date: 3 Apr 2024
BHD #: 2326
County Parcel: 02-143-0-0115
Plan Series: Custom 5 CR
Owner #: 501-3450

Drawing Issue and Revision Schedule

#	Date	Description
1	3 Apr 2024	Bid Documents

Enlarged Plumbing Plans

P401

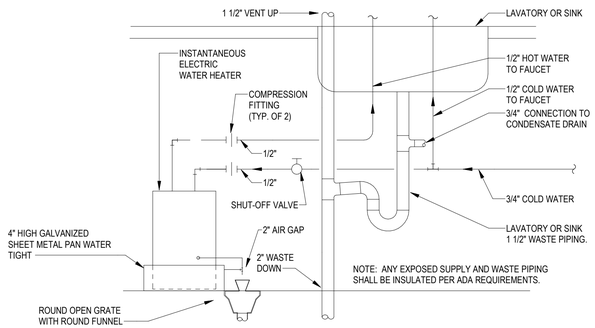

7 / P501 INSTANTANEOUS ELECTRIC WATER HEATER
NOT TO SCALE

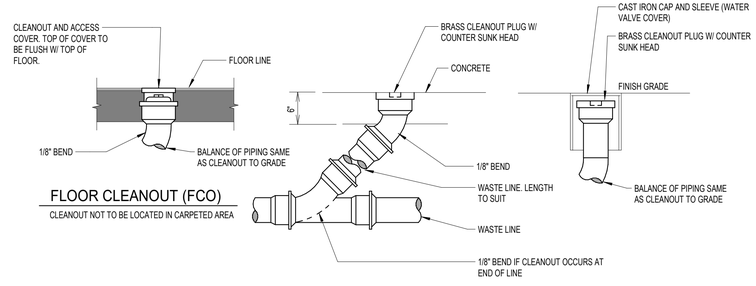

4 / P501 CLEANOUT DETAILS
NOT TO SCALE

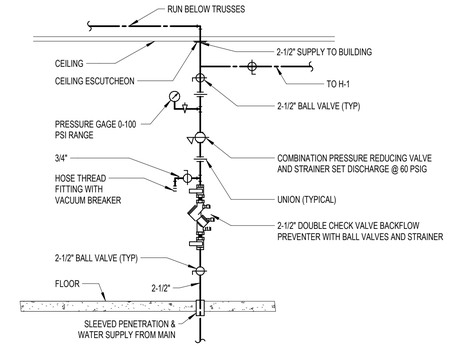

1 / P501 VERTICAL WATER PRESSURE REDUCING STATION DETAIL
NOT TO SCALE

NOTES:
1. VALVE MUST BE INSTALLED WITH THE CHAIN AND RESET BUTTON FACING OUT AND ACCESSIBLE.
2. THE CHAIN IS A PLUMB LINE. MAKE SURE VALVE IS MOUNTED ABSOLUTELY LEVEL AND NO PART OF THE CHAIN IS TOUCHING THE RING.
3. VALVE MUST BE INSTALLED WITH GAS FLOW IN DIRECTION OF "ARROW" CAST INTO VALVE BODY.
4. SEISMIC VALVE TO BE LOCATED WITHIN THE FIRST SIX LINEAL FEET OF PIPE FROM METER.
5. SEISMIC VALVE MUST BE SAME SIZE AS LINE INTO BUILDING. SEISMIC VALVE MUST BE 2" MINIMUM FLANGED.

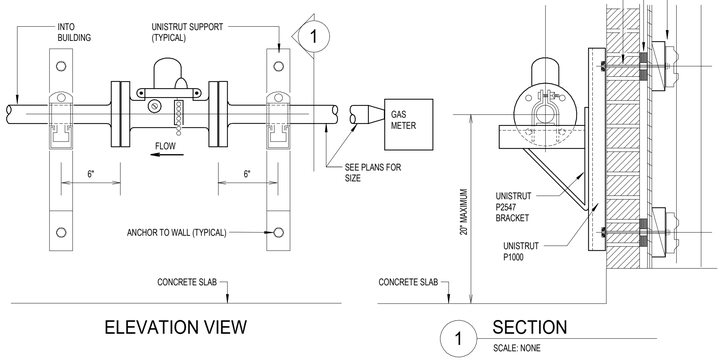

8 / P501 SEISMIC VALVE DETAIL
NOT TO SCALE

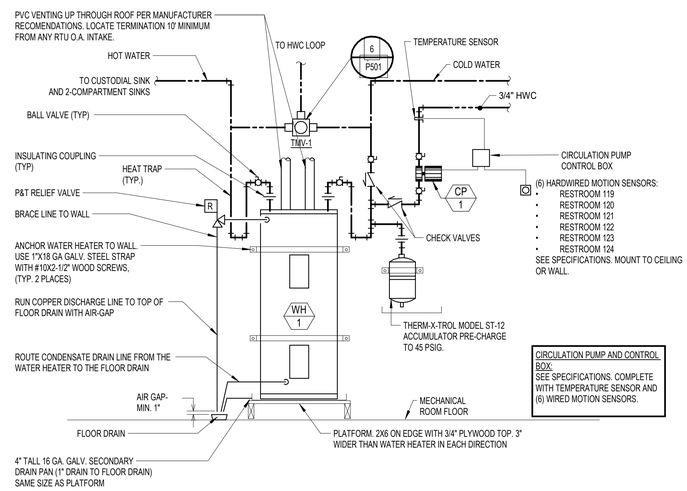

5 / P501 GAS-FIRED TANK WATER HEATER PIPING DETAIL
NOT TO SCALE

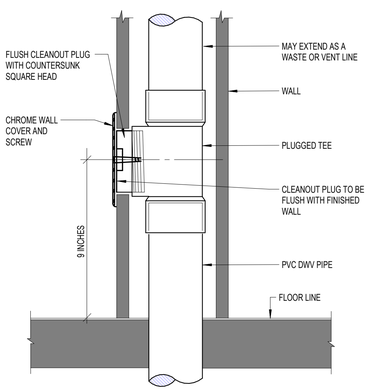

2 / P501 WALL CLEANOUT DETAIL
NOT TO SCALE

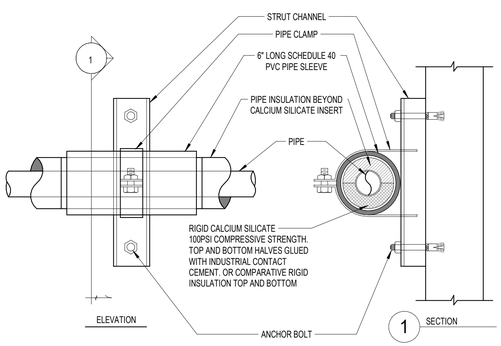

9 / P501 WALL PIPE SUPPORT DETAIL
NOT TO SCALE

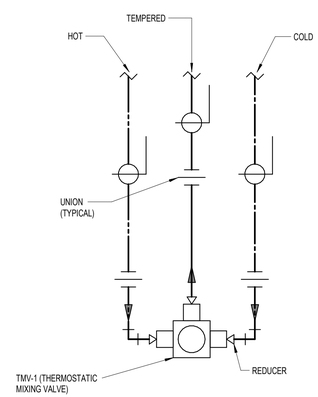

6 / P501 MIXING VALVE PIPING SCHEME
NOT TO SCALE

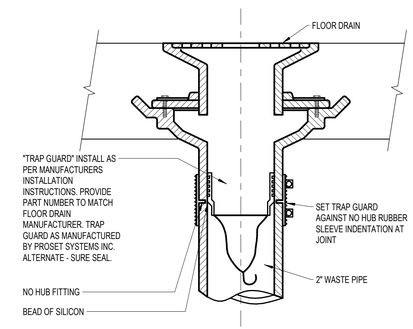

3 / P501 TRAP GUARD TRAP SEAL DETAIL
NOT TO SCALE

bhd ARCHITECTS
www.bhdarchitects.com
Phone 801.571.0010
Fax 801.571.0303
Toll Free 888.571.0010
65 East Wadsworth Park Drive
Suite 205 Draper, Utah 84020

LICENSED PROFESSIONAL ENGINEER
04/05/2024
No. 190991
BENJAMIN L. DAVIS
STATE OF UTAH

181 East 5600 South
Murray, Utah 84107
O: (801)530-3148
www.vbfa.com
VBFA Project #: 240027
VBFA

THE CHURCH OF JESUS CHRIST OF LATTER-DAY SAINTS

Tooele UT Deseret Peak Sr Seminary

Approximately: 2234 North Berra Boulevard, Tooele, Utah
40.569694, -112.303347

Date: 3 Apr 2024
BHD #: 2326
County Parcel: 02-143-0-0115
Plan Series: Custom 5 CR
Owner #: 501-3450

Drawing Issue and Revision Schedule

#	Date	Description
1	3 Apr 2024	Bid Documents

Plumbing Details

P501

4/8/2024 3:52:01 PM

GAS-FIRED WATER HEATER

ID	MANUFACTURER	MODEL NUMBER	LOCATION	TYPE	GAS-FIRED HEAT EXCHANGER / GAS BURNER: INPUT	EFFICIENCY	STAGES	FUEL TYPE	WATERSIDE / STORAGE: RECOVERY	VOLUME	MAX TEMP RISE	SINGLE POINT V/PH/HZ	UNIT WEIGHT	REMARKS
WH-1	POLARIS	PGC3 34 130 2NV	CUSTODIAL 117	STORAGE	130000	96%	58.2/95.7	NAT. GAS	165	34	90°F	120/1/60	150 LBS	SEE NOTES 1,2

1. SEE SPECIFICATIONS & DETAIL 5/P501
2. COMPLETE WITH CIRCULATING PUMP, CP-1. SEE DOMESTIC PUMP SCHEDULE.

ELECTRIC WATER HEATER SCHEDULE

ID	MANUFACTURER	MODEL	LOCATION	SERVICE	INPUT LOAD (Kw)	UEF	RECOVERY RATE @ 80°F TEMP RISE (GPH)	TANK VOLUME (GAL)	SIZE (IN)	V/PH/HZ	NOTES
EWH-1	AO SMITH	EJC-6	COLLABORATION ROOM SINK	DHW	1.65	-	8 @ 90°F RISE	6	14.25 D x 15.25 H	120/1/60	-

DOMESTIC CIRCULATING PUMP SCHEDULE

ID	MANUFACTURER	MODEL NO.	TYPE	PUMP: DESIGN FLOW	PUMP: HEAD	MOTOR: POWER	VOLT	PH	NOTES
CP-1	ACT D'MAND	SS3-200	INLINE	3.0 GPM	18.0 FT	197 W	115 V	1	SEE NOTES 1,2,3

1. 3-SPEED MOTOR.
2. COMPLETE WITH TEMPERATURE SENSOR, CONTROLLER, AND (6) WIRED MOTION SENSORS.
3. SEE SPECIFICATION SECTION 22 3305 & DETAIL E/P501.

THERMOSTATIC MIXING VALVE SCHEDULE

ID	LOCATION: NAME	LOCATION: NO.	MANUFACTURER	MODEL	QTY	MATERIAL	FINISH	FLUID PROPERTIES: TYPE	LWT SETPOINT	EWT: HOT	EWT: COLD	FLOW	MIN FLOW	MAX PD	VALVE PROPERTIES: INLET SIZE	OUTLET SIZE	MAWP	MAWT	REMARKS
TMV	CUSTODIAL	117	POWERS	LFLM495	1	LEAD FREE BRASS	ROUGH BRONZE	DOM. WATER	110 °F	140 °F	40 °F	3.0 GPM	0.5 GPM	10.0 psi	1/2"	1/2"	125 psi	200 °F	ASSE 1017 COMPLIANT

PLUMBING FIXTURE SCHEDULE

MARK	QUANTITY	FIXTURE	MANUFACTURER	MODEL	PIPE CONNECTIONS: WASTE: TRAP	WASTE: DRAIN SIZE	VENT	C.W.	H.W.	REMARKS
DSN-1	10	DOWNSPOUT NOZZLE	MIFAB	R-1940						
EWC-1	1	WATER COOLER - DUAL HEIGHT	ELKAY	EZSTL8WSSK		2"	1-1/2"	1/2"		COMPLETE WITH BOTTLE FILLING STATION.
FD-1	9	FLOOR DRAIN	WATTS	FD-200-A		2"	2"			
H-1	1	EXTERIOR HYDRANT	JR SMITH	5609-QT				3/4"		NON-FREEZE
LAV-1	6	LAVATORY - WALL HUNG	AMERICAN STANDARD	LUCERNE				1/2"	1/2"	C/W SINGLE SUPPLY PROXIMITY SENSOR FAUCET. SEE SPECIFICATIONS. NOTES 2, 3.
RD-1	14	COMBINATION DRAINS	MIFAB	R1270		3"				3" DRAINS FOR PRIMARY AND OVERFLOW
S-2	1	DUAL BOWL SINK	ELKAY	ELUH3116		2"	2"	1/2"	1/2"	SEE NOTE 4.
SS-1	1	SERVICE SINK	FIAT	MSB-2424				3/4"	3/4"	
U-1	6	URINAL	AMERICAN STANDARD	WASHBROOK		2"	1-1/2"	3/4"		
WC-1	6	WATER CLOSET - FLOOR MOUNT - FLUSH VALVE - ADA	AMERICAN STANDARD	MADERA		4"	2"	1"		

1. COLD WATER FIXTURE UNITS ARE 98.5. WASTE WATER FIXTURE UNITS ARE 87.5.
2. WHEN MOUNTED PER ARCHITECTURAL ELEVATIONS, ADA ACCESSIBILITY REQUIREMENTS ARE SATISFIED.
3. SENSOR TYPE SUPPLY FIXTURE WITH HARD-WIRED LOW VOLTAGE POWER FROM CENTRAL TRANSFORMER (NO PLUG-IN TYPE). SEE SPECIFICATIONS.
4. PROVIDE 120V, 3/4 H.P. DISPOSER. SEE SPECIFICATIONS.

bhd ARCHITECTS
www.bhdarchitects.com
Phone 801.571.0010
Fax 801.571.0303
Toll Free 888.571.0010
65 East Wadsworth Park Drive
Suite 205 Draper, Utah 84020

LICENSED PROFESSIONAL ENGINEER
04/05/2024
No. 190991
BENJAMIN L. DAVIS
STATE OF UTAH

181 East 5600 South
Murray, Utah 84107
O: (801)530-3148
www.vbfa.com
VBFA Project #: 240027
VBFA

THE CHURCH OF JESUS CHRIST OF LATTER-DAY SAINTS

Tooele UT Deseret Peak Sr Seminary

Approximately 2234 North Berra Boulevard, Tooele, Utah
40.569694, -112.303347

Date:	BHD #:	County Parcel:	Plan Series:	Owner #:
3 Apr 2024	2326	02-143-0-0115	Custom 5 CR	501-3450

Drawing Issue and Revision Schedule

#	Date	Description
1	3 Apr 2024	Bid Documents

Plumbing Schedules

P601

4/8/2024 3:52:06 PM

LEGEND

SYMBOL	DESCRIPTION	SYMBOL	DESCRIPTION	SYMBOL	DESCRIPTION
	BRANCH DUCT TAKE-OFF SEE DETAIL A/M502		BDD - (BACK DRAFT DAMPER)	SA	SUPPLY AIR
				RA	RETURN AIR/RELIEF AIR TO ERV's
	SINGLE THICKNESS TURNING VANES		MANUAL VOLUME DAMPER	OA	OUTSIDE AIR
				TA	TRANSFER AIR
	DUCT TRANSITION		FLEX. CONNECTION 6'-0" MAX LENGTH - SEE DETAIL F/M502	FA	FRESH AIR (ERV LABEL)
				EA	EXHAUST AIR
	MOTORIZED DAMPER	SD-1	DUCT SMOKE DETECTOR. INSTALL 12x12 ACCESS DOOR AT ALL LOCATIONS	AF	ABOVE FLOOR
				SL UP	SLOPE UP OR DN

GENERAL NOTES

1 ALL DUCT DIMENSIONS SHOWN ARE CLEAR DIMENSIONS INSIDE DUCT LINER.

2 SEE ARCHITECTURAL REFLECTED CEILING PLAN FOR EXACT LOCATION OF GRILLES AND DIFFUSERS.

KEYED NOTES

1 DUCT RISES UP TO ROOF TOP UNIT BETWEEN ROOF TRUSSES. COORDINATE EXACT LOCATION AND SIZE WITH RTU PROVIDED AND STRUCTURAL.

2 12"X12" EXHAUST DUCT UP TO ROOFTOP PENTHOUSE.

3 24"X12" RETURN AIR DUCT DROP IN SHAFT TO LINED PLENUM BEHIND SIDEWALL RETURN AIR GRILLE.

4 24"X10" RETURN AIR DUCT DROP IN SHAFT TO LINED PLENUM BEHIND SIDEWALL RETURN AIR GRILLE.

MECHANICAL SHEET INDEX

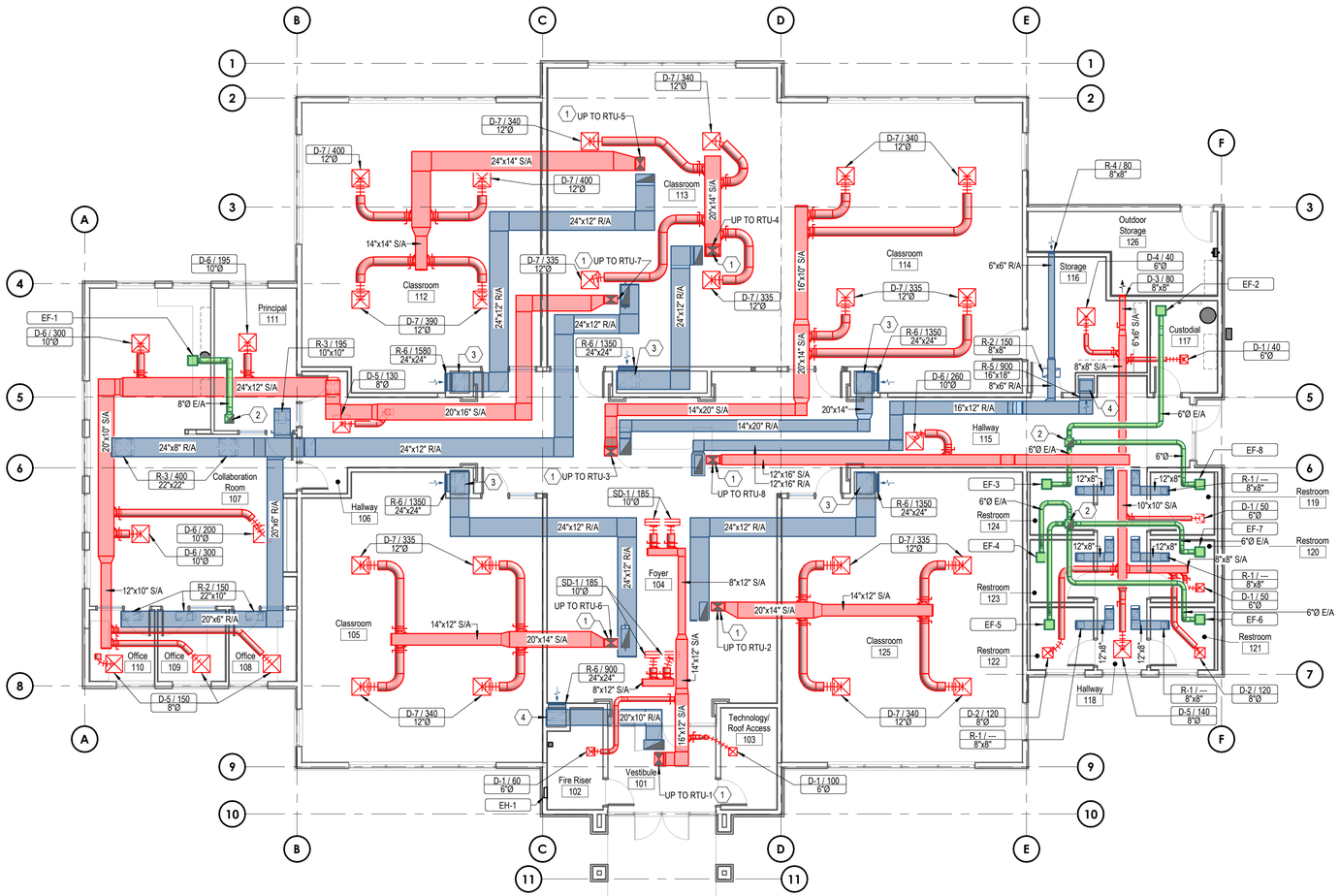

1 M101 LEVEL 1 HVAC PLAN
1/8" = 1'-0"
0 4' 8' 16'

bhd ARCHITECTS
www.bhdarchitects.com
Phone 801.571.0010
Fax 801.571.0303
Toll Free 888.571.0010
65 East Wadsworth Park Drive
Suite 205 Draper, Utah 84020

LICENSED PROFESSIONAL ENGINEER
04/05/2024
No. 190991
BENJAMIN L. DAVIS
STATE OF UTAH

181 East 5600 South
Murray, Utah 84107
O: (801)530-3148
www.vbfa.com
VBFA Project #: 240027
VBFA

THE CHURCH OF JESUS CHRIST OF LATTER-DAY SAINTS

Tooele UT Deseret Peak Sr Seminary

Approximately 2234 North Berra Boulevard, Tooele, Utah
40.569894, -112.303347

Date: 3 Apr 2024
BHD #: 2326
County Parcel: 02-143-0-0115
Plan Series: Custom 5 CR
Owner #: 501-3450

Drawing Issue and Revision Schedule

#	Date	Description
1	3 Apr 2024	Bid Documents

Level 1 HVAC Plan

M101

4/8/2024 3:52:09 PM

KEYED NOTES

1. RTU OUTSIDE AIR INTAKE. COORDINATE ALL EXHAUST AIR TERMINATIONS AND PLUMBING VENTS TO BE 10 FEET MINIMUM FROM O.A. INTAKE.
2. 3/4" GAS PIPING DOWN IN RTU CURB, TYPICAL. SEE SHEET P101 FOR CONTINUATION.

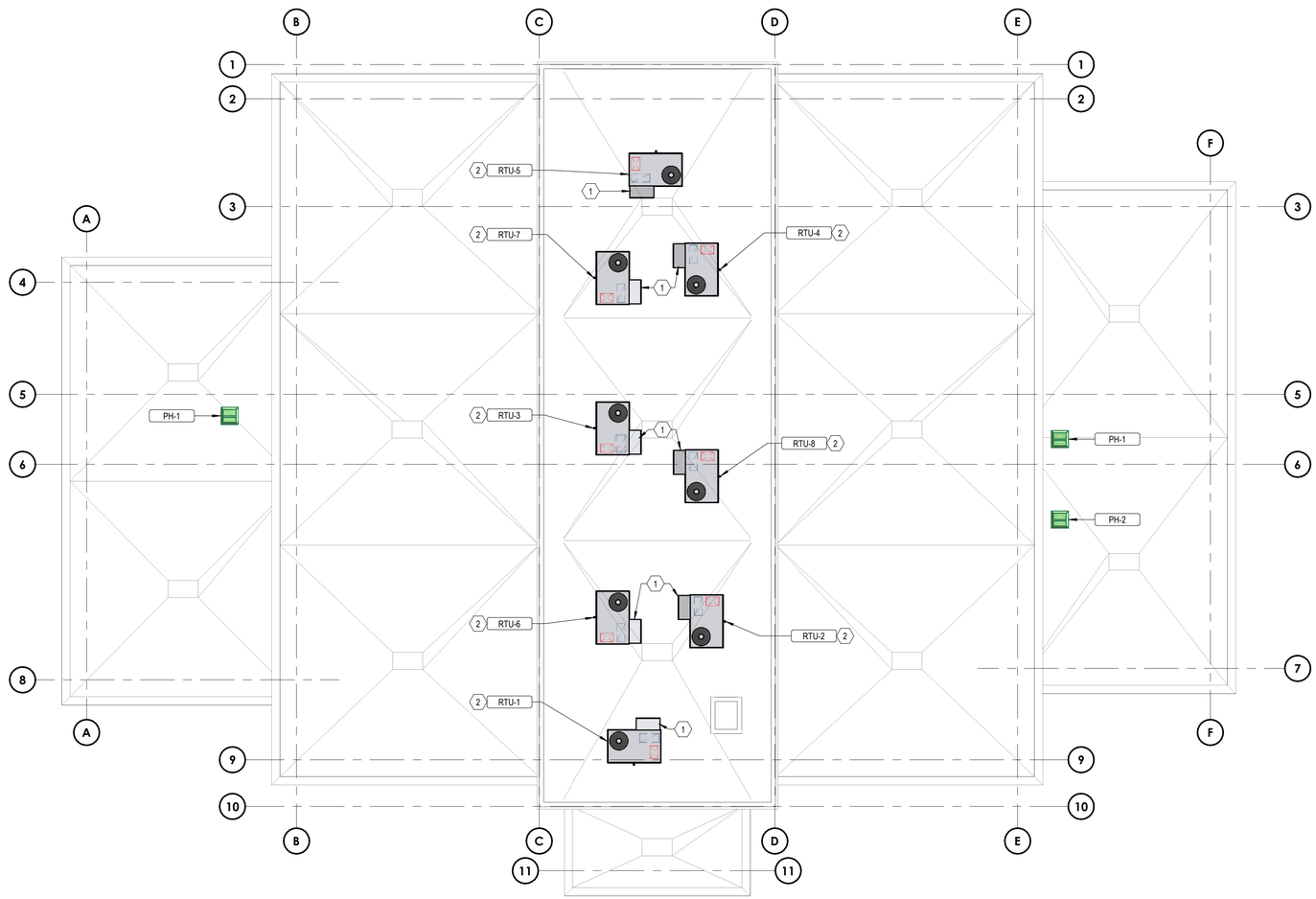

1 M102 ROOF HVAC PLAN
1/8" = 1'-0"
0 4' 8' 16'

NORTH

bhd ARCHITECTS
www.bhdarchitects.com
Phone 801.571.0010
Fax 801.571.0303
Toll Free 888.571.0010
65 East Wadsworth Park Drive
Suite 205 Draper, Utah 84020

LICENSED PROFESSIONAL ENGINEER
04/05/2024
No. 190991
BENJAMIN L. DAVIS
STATE OF UTAH

181 East 5600 South
Murray, Utah 84107
O: (801)530-3148
www.vbfa.com
VBFA Project #: 240027
VBFA

THE CHURCH OF
JESUS CHRIST
OF LATTER-DAY SAINTS

Tooele UT Deseret Peak Sr Seminary

Approximately 2234 North Berra Boulevard, Tooele, Utah
40.569494, -112.303347

Date: 3 Apr 2024
BHD #: 2326
County Parcel: 02-143-0-0115
Plan Series: Custom 5 CR
Owner #: 501-3450

Drawing Issue and Revision Schedule

#	Date	Description
1	3 Apr 2024	Bid Documents

Roof HVAC Plan

M102

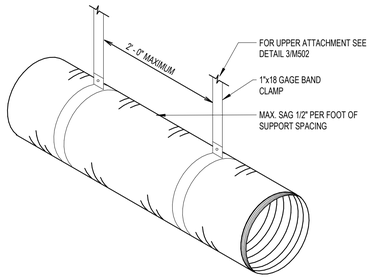

7 / M501 FLEXIBLE DUCT SUPPORT DETAIL
NOT TO SCALE

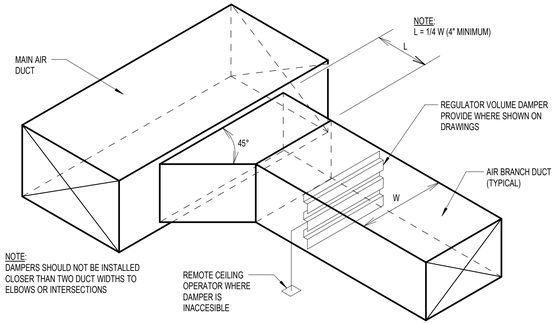

4 / M501 SUPPLY OR RETURN AIR DUCT BRANCH CONNECTION DETAIL
NOT TO SCALE

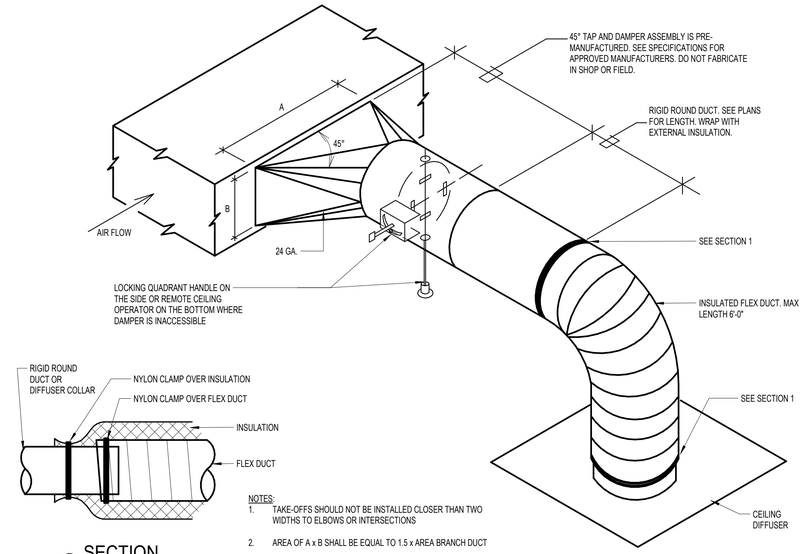

NOTES:
1. TAKE-OFFS SHOULD NOT BE INSTALLED CLOSER THAN TWO WIDTHS TO ELBOWS OR INTERSECTIONS
2. AREA OF A x B SHALL BE EQUAL TO 1.5 x AREA BRANCH DUCT

1 SECTION

1 / M501 SQUARE TO ROUND TAKE-OFF DETAIL
NOT TO SCALE

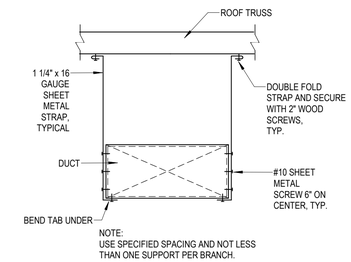

8 / M501 RECTANGULAR DUCT DETAIL
NOT TO SCALE

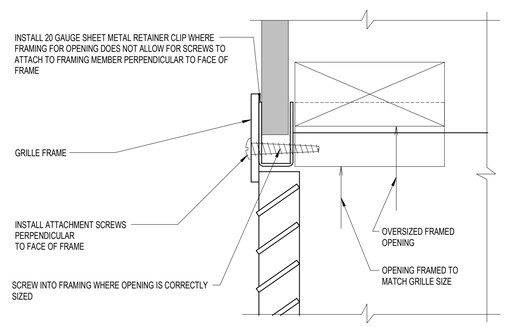

5 / M501 GRILLE ATTACHMENT DETAIL
NOT TO SCALE

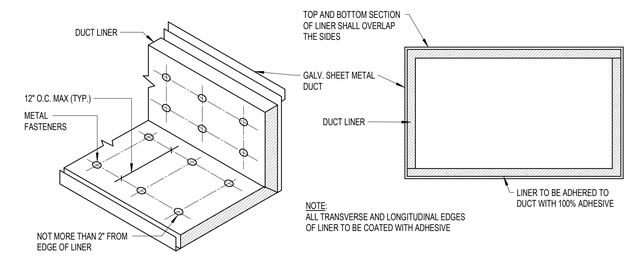

2 / M501 DUCT LINER DETAIL
NOT TO SCALE

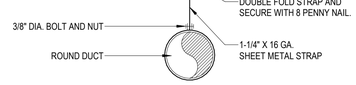

NOTE:
USE SPECIFIED SPACING AND NOT LESS THAN ONE SUPPORT PER BRANCH.

9 / M501 ROUND DUCT SUPPORT DETAIL
NOT TO SCALE

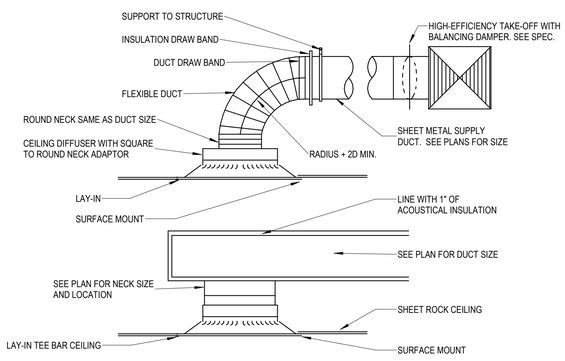

NOTES:
1. EXHAUST AND RETURN GRILLES ARE SIMILAR.
2. EITHER METHOD IS ACCEPTABLE

6 / M501 DIFFUSER CONNECTION DETAIL
NOT TO SCALE

DIMENSION OF LONGEST SIDE (INCHES)	SHEET METAL GAGE (ALL FOUR SIDES)	TRANSVERSE REINFORCING (1)					
		MINIMUM REINFORCING ANGLE SIZE AND MAXIMUM LONGITUDINAL SPACING BETWEEN TRANSVERSE JOINTS AND/OR INTERMEDIATE REINFORCING	AT JOINTS				
			MIN. H. (IN)	DRIVE SLIP / PLAIN 'S' SLIP	HEMMED 'S' SLIP	ALTERNT BAR SLIP	REIN-FORCED BAR SLIP
				RECOM-MENDED GAGE	RECOM-MENDED GAGE	RECOM-MENDED GAGE	RECOM-MENDED GAGE
UP THRU 12	26	NONE REQUIRED	1	26	26	24	24
13 - 18	24	NONE REQUIRED	1	24	24	24	24
19 - 30	24	1"x1"x1/8" @ 60 IN	1	-	24	24	24
31 - 36	22	1"x1"x1/8" @ 60 IN	1	-	-	22	22

1. TRANSVERSE REINFORCING SIZE IS DETERMINED BY DIMENSION OF SIDE TO WHICH ANGLE IS APPLIED.
2. LONGITUDINAL JOINTS TO BE PITTSBURG OR SNAP LOCK TYPE.

3 / M501 DUCT CONSTRUCTION DETAIL
NOT TO SCALE

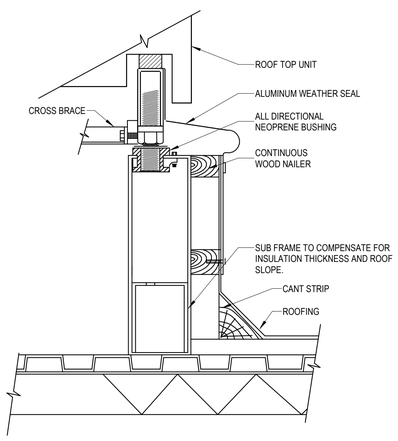

10 / M501 ROOFTOP CURB DETAIL (SIMILAR)
NOT TO SCALE

bhd ARCHITECTS
www.bhdarchitects.com
Phone 801.571.0010
Fax 801.571.0303
Toll Free 888.571.0010
65 East Wadsworth Park Drive
Suite 205 Draper, Utah 84020

LICENSED PROFESSIONAL ENGINEER
04/05/2024
No. 190991
BENJAMIN L. DAVIS
STATE OF UTAH

181 East 5600 South
Murray, Utah 84107
O: (801)530-3148
www.vbfa.com
VBFA Project #: 240027
VBFA

THE CHURCH OF JESUS CHRIST OF LATTER-DAY SAINTS

Tooele UT Deseret Peak Sr Seminary

Approximately 2234 North Berra Boulevard, Tooele, Utah
40.569694, -112.303347

Date: 3 Apr 2024
BHD #: 2326
County Parcel: 02-143-0-0115
Plan Series: Custom 5 CR
Owner #: 501-3450

Drawing Issue and Revision Schedule

#	Date	Description
1	3 Apr 2024	Bid Documents

Mechanical Details

M501

4/8/2024 3:52:09 PM

4/8/2024 3:52:11 PM

PACKAGED ROOFTOP UNIT SCHEDULE

					SUPPLY FAN		HEATING SECTION						COOLING COIL SECTION					COMPRESSOR		FILTER	ELECTRICAL			
ID	MANUFACTURER	MODEL NUMBER	LOCATION	OUTSIDE AIRFLOW RATE (CFM)	AIRFLOW RATE (CFM)	EXTERNAL STATIC PRESSURE (IN. H2O)	HEATING INPUT (BTU/H)	HEATING OUTPUT (BTU/H)	AMBIENT TEMP. DB (°F)	ENTERING/ LEAVING AIR TEMP. (°F)	MEDIUM	AFUE	COOLING LOAD (BTU/H)	AMBIENT TEMP. DB/WB (°F)	ENTERING AIR TEMP. DB/WB (°F)	LEAVING AIR TEMP. DB/WB (°F)	MEDIUM	TYPE	LOW AMBIENT KIT	FILTR.	TOTAL MCA	SUPPLY FAN MOTOR (BHP)	SINGLE POINT VOLT/PH/HZ	REMARKS
RTU-1	CARRIER	48FCDA04A1A5-0A2A0	ROOF	280	900	0.75	53600	43200	0	48.3 / 78.4	NAT. GAS	81	18600	96.0 / 62.0	83.5 / 63.3	60.5 / 55.8	R-410A	1-STAGE SCROLL	NO	(2) 16x25X2 MERV 8	26	0.18	208/3/60	SEE NOTES 1-8
RTU-2	CARRIER	48FCDA04A2A5-0A2A0	ROOF	280	1350	0.8	53600	43200	0	55.8 / 79.7	NAT. GAS	81	25800	95.1 / 61.7	80.9 / 60.8	59.6 / 53.5	R-410A	1-STAGE SCROLL	NO	(2) 16x25X2 MERV 8	27	0.3	208/3/60	SEE NOTES 1-8
RTU-3	CARRIER	48FCDA04A2A5-0A2A0	ROOF	280	1350	0.8	53600	43200	0	55.8 / 79.6	NAT. GAS	81	27200	96.0 / 62.0	81.1 / 60.9	58.7 / 53.2	R-410A	1-STAGE SCROLL	NO	(2) 16x25X2 MERV 8	27	0.3	208/3/60	SEE NOTES 1-8
RTU-4	CARRIER	48FCDA04A2A5-0A2A0	ROOF	320	1350	0.8	53600	43200	0	53.7 / 77.7	NAT. GAS	81	28600	96.0 / 62.0	81.4 / 61.0	57.9 / 52.9	R-410A	1-STAGE SCROLL	NO	(2) 16x25X2 MERV 8	27	0.3	208/3/60	SEE NOTES 1-8
RTU-5	CARRIER	48FCDA05A2A5-0A2A0	ROOF	280	1575	0.8	53600	43200	0	58.1 / 81.4	NAT. GAS	81	32600	96.0 / 62.0	80.5 / 60.8	57.5 / 52.9	R-410A	1-STAGE SCROLL	NO	(2) 16x20X2 MERV 8	33	0.35	208/3/60	SEE NOTES 1-8
RTU-6	CARRIER	48FCDA04A2A5-0A2A0	ROOF	280	1350	0.8	53600	43200	0	55.7 / 79.0	NAT. GAS	81	26700	96.0 / 62.0	80.9 / 60.8	59.0 / 23.3	R-410A	1-STAGE SCROLL	NO	(2) 16x25X2 MERV 8	27	0.3	208/3/60	SEE NOTES 1-8
RTU-7	CARRIER	48FCDA04A2A5-0A2A0	ROOF	200	1575	0.8	53600	43200	0	61.5 / 81.0	NAT. GAS	81	34800	96.0 / 62.0	79.4 / 62.3	55.6 / 54.0	R-410A	1-STAGE SCROLL	NO	(2) 16x25X2 MERV 8	33	0.35	208/3/60	SEE NOTES 1-8
RTU-8	CARRIER	48FCDA04A1A5-0A2A0	ROOF	120	900	0.8	53600	43200	0	60.9 / 84.5	NAT. GAS	81	16600	96.0 / 62.0	79.5 / 61.7	59.0 54.9	R-410A	1-STAGE SCROLL	NO	(2) 16x25X2 MERV 8	26	0.2	208/3/60	SEE NOTES 1-8

1. SCHEDULED HEATING CAPACITIES ARE AT SITE ELEVATION: 3240 FT.
2. SCHEDULED COOLING CAPACITIES ARE AT SITE ELEVATION: 3240 FT.
3. 14" TALL ROOF CURB.
4. POWERED CONVENIENCE OUTLET - 4.8 AMP (FLA).
5. POWER EXHAUST SYSTEM - 208/1/60 1.9 AMPS (FLA).
6. STANDARD LEAK ENTHALPY ECONOMIZER.
7. PROVIDE VERTICAL FLUE DISCHARGE DEFLECTOR.
8. PROVIDE WINTER START KIT.

GRILLES, REGISTERS AND DIFFUSERS SCHEDULE

							NECK			BLADE DESIGN					INSTALLATION		
												DEFLECTION ANGLE			BORDER		
ID	DESCRIPTION	MANUFACTURER	MODEL NUMBER	MATERIAL	FACE SIZE	MODULE SIZE	SIZE	WIDTH	HEIGHT	THICKNESS	SPACING	SINGLE	DOUBLE	ORIENTATION	TYPE	SPECIFICATION	REMARKS
SD-1	SLOT DIFFUSER	TITUS	MLT 39	ALUMINIUM	24"x8"		10"								-----	FINISH SHALL BE OFF-WHITE BAKED ENAMEL	SEE NOTES 1,2
D-1	LOUVERED FACE DIFFUSER	TITUS	TDC	STEEL	12x12	6x6	6"								TYPE 6 (SURFACE)	FINISH SHALL BE OFF-WHITE BAKED ENAMEL	SEE NOTES 1,2
D-2	LOUVERED FACE DIFFUSER	TITUS	TDC	STEEL	15x15	9x9	8"								TYPE 6 (SURFACE)	FINISH SHALL BE OFF-WHITE BAKED ENAMEL	SEE NOTES 1,2
D-3	LOUVERED FACE DIFFUSER SIDEWALL	TITUS	271RL	STEEL	10x10			8"	8"						TYPE 1 (SURFACE)	FINISH SHALL BE OFF-WHITE BAKED ENAMEL	SEE NOTES 1,2
D-4	LOUVERED FACE DIFFUSER	TITUS	TDC	STEEL	24x24	6x6	6"								TYPE 3 (LAY-IN)	FINISH SHALL BE OFF-WHITE BAKED ENAMEL	SEE NOTES 1,2,6
D-5	LOUVERED FACE DIFFUSER	TITUS	TDC	STEEL	24x24	9x9	8"								TYPE 3 (LAY-IN)	FINISH SHALL BE OFF-WHITE BAKED ENAMEL	SEE NOTES 1,2,6
D-6	LOUVERED FACE DIFFUSER	TITUS	TDC	STEEL	24x24	12x12	10"								TYPE 3 (LAY-IN)	FINISH SHALL BE OFF-WHITE BAKED ENAMEL	SEE NOTE 1,2,7
D-7	LOUVERED FACE DIFFUSER	TITUS	TDC	STEEL	24x24	12x12	12"								TYPE 3 (LAY-IN)	FINISH SHALL BE OFF-WHITE BAKED ENAMEL	SEE NOTE 1,2,7
R-1	LOUVERED GRILLE CEILING RETURN	TITUS	355RL	STEEL				8"	8"	1/8"	1/2"	35.0°		LONG	TYPE 1 (SURFACE)	FINISH SHALL BE OFF-WHITE BAKED ENAMEL	SEE NOTES 1,2
R-2	LOUVERED GRILLE CEILING RETURN	TITUS	355RL	STEEL	24x12			8"	8"	1/8"	1/2"	35.0°		LONG	TYPE 3 (LAY-IN)	FINISH SHALL BE OFF-WHITE BAKED ENAMEL	SEE NOTES 1,2,6
R-3	LOUVERED GRILLE CEILING RETURN	TITUS	355RL	STEEL	24x24			10"	10"	1/8"	1/2"	35.0°		LONG	TYPE 3 (LAY-IN)	FINISH SHALL BE OFF-WHITE BAKED ENAMEL	SEE NOTES 1,2,7
R-4	LOUVERED GRILLE LOW SIDEWALL	TITUS	355RS	STEEL				8"	8"	1/8"	1/2"	35.0°	0.0°	SHORT	TYPE 1 (SURFACE)	FINISH SHALL BE OFF-WHITE BAKED ENAMEL	SEE NOTES 1,2,3,4,5
R-5	LOUVERED GRILLE LOW SIDEWALL	TITUS	355RS	STEEL				16"	18"	1/8"	1/2"	35.0°	0.0°	SHORT	TYPE 1 (SURFACE)	FINISH SHALL BE OFF-WHITE BAKED ENAMEL	SEE NOTES 1,2,3,4,5
R-6	LOUVERED GRILLE LOW SIDEWALL	TITUS	355RS	STEEL				24"	24"	1/8"	1/2"	35.0°	0.0°	SHORT	TYPE 1 (SURFACE)	FINISH SHALL BE OFF-WHITE BAKED ENAMEL	SEE NOTES 1,2,3,4,5

1. MAXIMUM NC = 25 @ MAXIMUM CFM NOTED.
2. SEE SPECIFICATIONS FOR APPROVED OTHER MANUFACTURERS.
3. RETURN AIR GRILLE TO BE MOUNTED 8" FROM FLOOR TO BOTTOM EDGE OF GRILLE.
4. BLADE ORIENTATION SHALL BE HORIZONTAL.
5. REFER TO DETAIL E/M503 FOR GRILLE INSTALLATION.
6. PROVIDE 12X12 PANEL FOR LAY-IN CEILING.
7. PROVIDE 24X24 PANEL FOR LAY-IN CEILING.

EXHAUST FAN SCHEUDLE

							ELECTRICAL		
ID	MANUFACTURER	MODEL NUMBER	LOCATION	TYPE	MIN A.C.F.M.	STATIC PRESSURE (in-wg)	MOTOR SIZE W	SINGLE POINT VOLT/PH/HZ	REMARKS
EF-1	BROAN	L100	COLLABORATION ROOM	CEILING	200		7.46	120 / 1 / 60	SEE NOTES 1,2
EF-2	BROAN	L100	CUSTODIAL	CEILING	75		7.46	120 / 1 / 60	SEE NOTES 1,2
EF-3	BROAN	L100	RESTROOM 119	CEILING	70		7.46	120 / 1 / 60	SEE NOTES 1,2
EF-4	BROAN	L100	RESTROOM 120	CEILING	70		7.46	120 / 1 / 60	SEE NOTES 1,2
EF-5	BROAN	L100	RESTROOM 121	CEILING	130		7.46	120 / 1 / 60	SEE NOTES 1,2
EF-6	BROAN	L100	RESTROOM 122	CEILING	130		7.46	120 / 1 / 60	SEE NOTES 1,2
EF-7	BROAN	L100	RESTROOM 123	CEILING	70		7.46	120 / 1 / 60	SEE NOTES 1,2
EF-8	BROAN	L100	RESTROOM 124	CEILING	70		7.46	120 / 1 / 60	SEE NOTES 1,2

1. SET BALANCE DAMPERS SHOWN ON M101 TO CFM LISTED.
2. CONTROL BY DIVISION 26.

LOUVERED PENTHOUSE SCHEUDLE

							DIMENSIONS					
							THROAT		HOOD			
ID	MANUFACTURER	MODEL NUMBER	DESIGN AIRFLOW	THROAT VELOCITY	THROAT AREA	PRESSURE DROP	WIDTH	LENGTH	LENGTH	WIDTH	UNIT WEIGHT	REMARKS
PH-1	LOREN COOK	12X12X2TRE	200-275 CFM	215 FPM	144 in2	0.00 IN-WG	12"	12"	24"	24"	50 lb	SEE NOTES 1,2,3
PH-2	LOREN COOK	12X12X2TRE	400 CFM	400 FPM	144 in2	0.00 IN-WG	12"	12"	24"	24"	50 lb	SEE NOTES 1,2,3

1. SEE SPECIFICATIONS FOR APPROVED MANUFACTURERS.
2. PROVIDE ALUMINIUM BIRD SCREEN OR INSECT SCREEN. SEE SPECIFICATIONS.
3. FINISH COLOR AS DIRECTED BY ARCHITECT. TO MATCH SURROUNDING SURFACE FINISH.

ELECTRIC WALL HEATER SCHEDULE

ID	MANUFACTURER	MODEL NUMBER	LOCATION	KW OUTPUT	AMPS	VOLTS	PHASE	HERTZ	REMARKS
EH-1	QMARK	QFG22281F	FIRE RISER [102]	2.2	10.0	208	1	60	BUILT-IN THERMOSTAT

PROJECT SCHEDULE

NAME	LOCATION	HEATING SEASON DB/WB	COOLING SEASON DB/WB	ALTITUDE
Tooele UT Deseret Peak Sr Seminary	Tooele Utah	98 F / 63 F	0 F / -1 F	5000

bhd ARCHITECTS
www.bhdarchitects.com
Phone 801.571.0010
Fax 801.571.0303
Toll Free 888.571.0010
65 East Wadsworth Park Drive
Suite 205 Draper, Utah 84020

LICENSED PROFESSIONAL ENGINEER
04/05/2024
No. 190991
BENJAMIN L. DAVIS
STATE OF UTAH

181 East 5600 South
Murray, Utah 84107
O: (801)530-3148
www.vbfa.com
VBFA Project #: 240027
VBFA

THE CHURCH OF JESUS CHRIST OF LATTER-DAY SAINTS

Tooele UT Deseret Peak Sr Seminary

Approximately 2234 North Benn Boulevard, Tooele, UTah
40.569694, -112.303347

Date: 3 Apr 2024
BHD #: 2326
County Parcel: 02-143-0-0115
Plan Series: Custom 5 CR
Owner #: 501-3450

Drawing Issue and Revision Schedule

#	Date	Description
1	3 Apr 2024	Bid Documents

Mechanical Schedules

M601

4/8/2024 3:52:12 PM

1 ME101 LEVEL 1 THERMAL ZONE DIAGRAM
1/8" = 1'-0"
0 4' 8' 16'

SYMBOLS

UC	UNITARY CONTROLLER (DIV 23). MOUNT MODULE IN ACCESSIBLE LOCATION ON OR NEAR ASSOCIATED AIR HANDLER/ROOFTOP UNIT.
T	THERMOSTAT (LCBS) OUTLET (DIV 26)
S	INDOOR AIR SENSOR OUTLET (DIV 26)
BMG	BUILDING MANAGEMENT GATEWAY (DIV 23)
CO_2	CO_2 SENSOR (DIV 23) INSTALL UPSTREAM OF RELIEF OR OUTSIDE AIR CONNECTON.
CRO	COMBUSTION RELAY AND THERMAL OVERLOAD DISCONNECT. (WITH 20 AMP RIB RELAY 2401B)

NOTES:

1. BOXES FOR THERMOSTAT (T) AND (S) OUTLETS SHALL BE 2"X4" WITH LONG DIMENSION VERTICAL. USE METAL BRACKET OF COVER PLATE ASSEMBLY TO MOUNT THERMOSTAT HORIZONTAL.
2. CONDUIT TO BE 1/2" UNLESS NOTED OTHERWISE.
3. ALL TEMPERATURE CONTROL CONDUIT SHALL BE FURNISHED AND INSTALLED BY DIVISION 26.
4. TEMPERATURE CONTROL WIRING THAT IS NOT IN CONDUIT SHALL BE RUN PARALLEL AND PERPENDICULAR TO BUILDING CONSTRUCTION LINES. SEE SPECIFICATIONS FOR ACCEPTABLE FASTENING METHODS AND MAXIMUM ALLOWABLE SPACING BETWEEN FASTENERS.
5. TEMPERATURE CONTROL WIRING THAT IS NOT IN CONDUIT SHALL BE LABELED. PROVIDE A LABEL AT ALL POINTS WHERE TEMPERATURE CONTROL WIRING ENTERS CONDUIT AND AT CONNECTIONS TO DEVICES.
6. SEAL OPEN END OF CONDUIT AIR-TIGHT AROUND THERMOSTAT/SENSOR WIRE WITH SEALANT COMPOUND. SEE SPECS FOR APPROVED PRODUCT.
7. SEAL ANNULAR SPACE BETWEEN CONDUIT AND OPENING IN FLOOR OR WALL WITH SEALANT COMPOUND. SEE SPECS FOR APPROVED PRODUCT.
8. SEAL OPEN END OF CONDUIT AT J-BOX AIR-TIGHT AROUND THERMOSTAT/SENSOR WIRE. SEAL ALL AIR GAPS AROUND J-BOX TO ISOLATE J-BOX FROM WALL CAVITY. SEAL BACK OF THERMOSTAT AROUND WIRES. PACK J-BOX TIGHT WITH GLASS FIBER BAT INSULATION. USE SEALING COMPOUND SPECIFICALLY MADE FOR REFRIGERATION AND AIR-CONDITIONING APPLICATIONS. SEE SPECIFICATIONS FOR APPROVED PRODUCTS.
9. ELECTRIC HEATER ZONE. CONNECT UC TO 20 AMP RELAY AND THEN TO THERMAL OVERLOAD. REFER TO WIRING DIAGRAM SHEET ME701.

HVAC ZONE LEGEND

- RTU-1
- RTU-2
- RTU-3
- RTU-4
- RTU-5
- RTU-6
- RTU-7
- RTU-8

bhd ARCHITECTS
www.bhdarchitects.com
Phone 801.571.0010
Fax 801.571.0303
Toll Free 888.571.0010
65 East Wadsworth Park Drive
Suite 205 Draper, Utah 84020

LICENSED PROFESSIONAL ENGINEER
04/05/2024
No. 190991
BENJAMIN L. DAVIS
STATE OF UTAH

181 East 5600 South
Murray, Utah 84107
O: (801)530-3148
www.vbfa.com
VBFA Project #: 240027
VBFA

THE CHURCH OF JESUS CHRIST OF LATTER-DAY SAINTS

Tooele UT Deseret Peak Sr Seminary

Approximately 2234 North Berra Boulevard, Tooele, Utah
40.566694, -112.303347

Date: 3 Apr 2024
BHD #: 2326
County Parcel: 02-143-0-0115
Plan Series: Custom 5 CR
Owner #: 501-3450

Drawing Issue and Revision Schedule

#	Date	Description
1	3 Apr 2024	Bid Documents

ATC Floor Plan & Details

ME101

CONTROL EQUIPMENT

MARK	DESCRIPTION	CAT. NO. (1)	MARK	DESCRIPTION	CAT. NO. (1)
BMG	BUILDING MANAGEMENT GATEWAY	LGW1000 (GATEWAY) WPM-8000 (WALL PLUG)	X2	TRANSFORMER 120V/24V 50VA	AT150F1022
UC	UNITARY CONTROLLER	YCRL64385R1000	E-BUS	ECHELON NETWORK CABLE	W221P-2001B
T	THERMOSTAT WALL MODULE	LCBS WALL MODULE	DS	DUCT AIR SENSOR	C7041B2005
	THERMOSTAT COVER PLATE ASSEMBLY	50002883-001	CO_2	CO_2 SENSOR	C7232B1006
S	REMOTE SENSOR	TR40	CRO	COMBUSTION RELAY AND THERMAL OVERLOAD DISCONNECT	(2)(4)

(1) ALL CATALOG NUMBERS SHOWN ARE HONEYWELL UNLESS NOTED OTHERWISE.

(2) SEE SPECIFICATIONS

(3) ONLY ONE REQUIRED FOR BUILDING. MAY BE CONNECTED TO ANY CONTROLLER AT NORTH SIDE.

(4) TO BE PURCHASED FROM AN APPROVED PRE-BUILT PANEL BUILDER.

1. THERMOSTAT CABLE- 4, 8 OR 12 CONDUCTOR- 18 AWG SOLID COPPER WIRE INSULATED WITH HIGH DENSITY POLYETHYLENE. CONDUCTORS PARALLEL. ENCLOSED IN BROWN PVC JACKET. (NO 22 AWG CABLE ALLOWED).
2. USE WIRE NUT CONNECTORS FOR SPLICING CONDUCTORS IN SPECIFIED LOCATIONS. AND TYTON TYPE CRIMP CONNECTORS FOR TERMINAL CONNECTIONS. NO TERMINAL CONNECTORS REQUIRED AT THERMOSTAT OR SENSOR.
3. DO NOT RUN ANY OTHER WIRING IN THIS CONDUIT EXCEPT THERMOSTAT CABLE.
4. DO NOT SPLICE WIRE IN RUNS FROM SENSOR TO THERMOSTAT, THERMOSTAT TO RTU, AND THERMOSTAT TO DISCHARGE AIR SENSOR.
5. PROVIDE CHASE NIPPLE WITH PLASTIC BUSHING WHEN ATTACHING J-BOX TO EQUIPMENT.
6. PROVIDE CABLE-CLAMP SO THAT CABLES CANNOT BE PULLED OUT OF J-BOX.

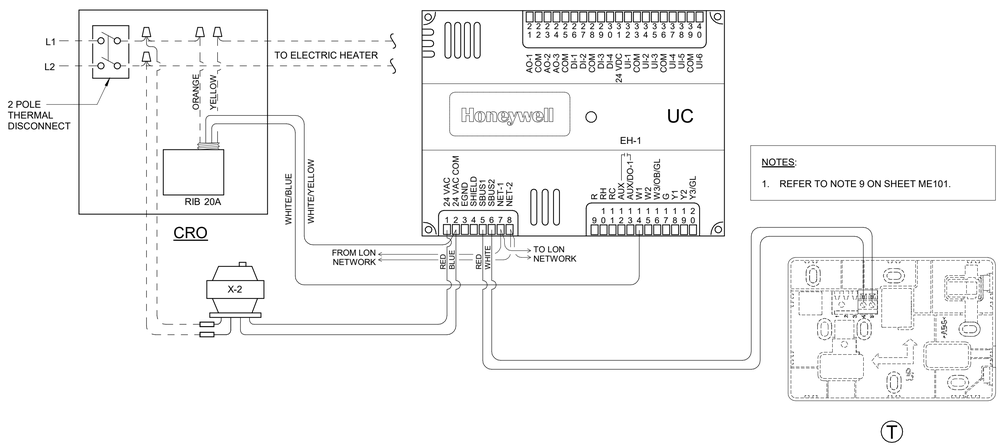

NOTES:

1. REFER TO NOTE 9 ON SHEET ME101.

ELECTRIC HEATER WIRING DIAGRAM

SYSTEM: EH-1

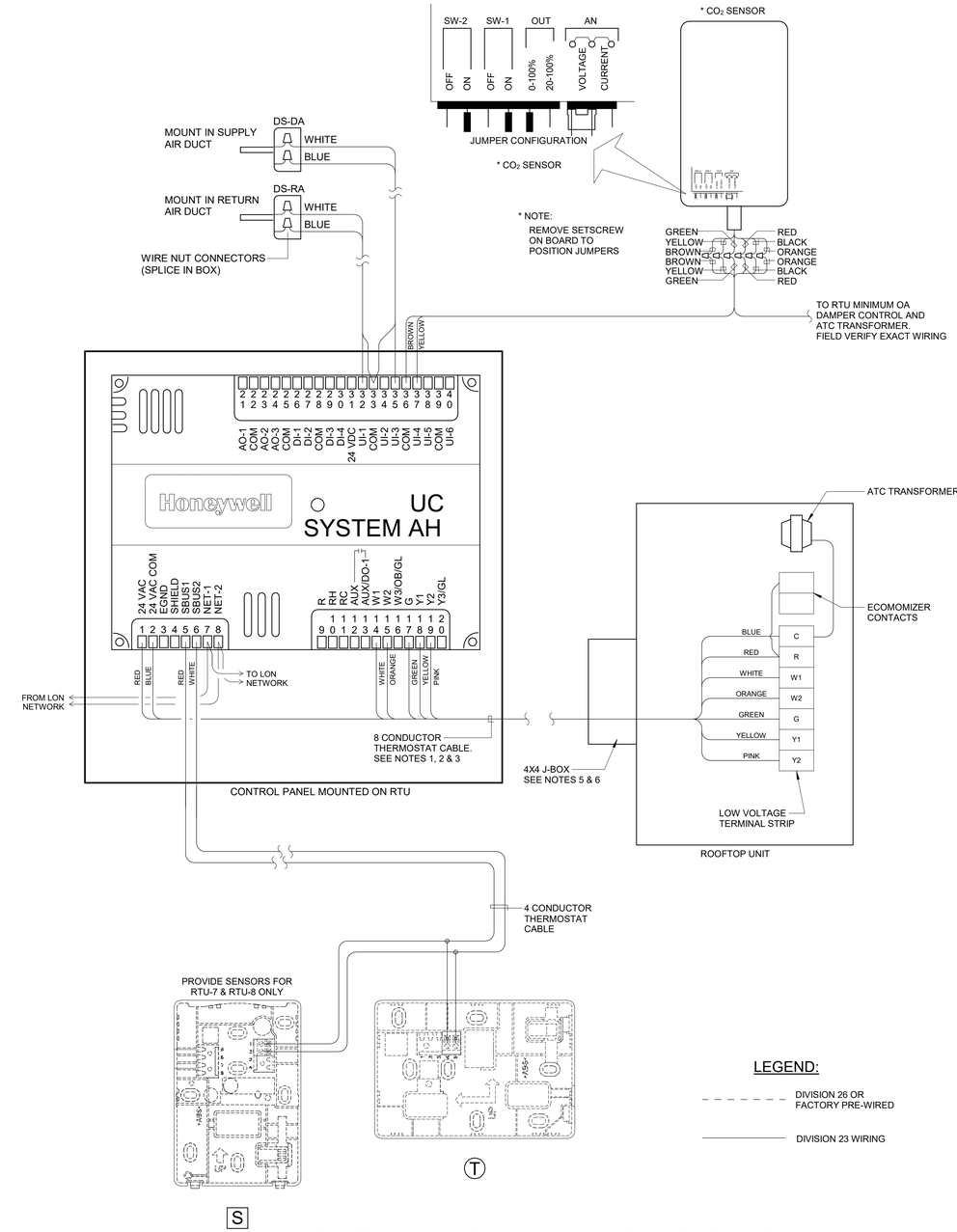

PACKAGED UNIT WIRING DIAGRAM

SYSTEMS: RTU-1, RTU-2, RTU-3, RTU-4, RTU-5 & RTU-6

bhd ARCHITECTS
www.bhdarchitects.com
Phone 801.571.0010
Fax 801.571.0303
Toll Free 888.571.0010
65 East Wadsworth Park Drive
Suite 205 Draper, Utah 84020

LICENSED PROFESSIONAL ENGINEER
04/05/2024
No. 190991
BENJAMIN L. DAVIS
STATE OF UTAH

181 East 5600 South
Murray, Utah 84107
O: (801)530-3148
www.vbfa.com
VBFA Project #: 240027
VBFA

THE CHURCH OF JESUS CHRIST OF LATTER-DAY SAINTS

Tooele UT Deseret Peak Sr Seminary

Approximately: 2234 North Bero Boulevard, Tooele, Utah
40.569694, -112.303347

Date: 3 Apr 2024
BHD #: 2326
County Parcel: 02-143-0-0115
Plan Series: Custom 5 CR
Owner #: 501-3450

Drawing Issue and Revision Schedule

#	Date	Description
1	3 Apr 2024	Bid Documents

ATC Wiring Diagrams

ME701

4/8/2024 3:52:13 PM

A E-BUS CONNECTION DETAIL
NO SCALE

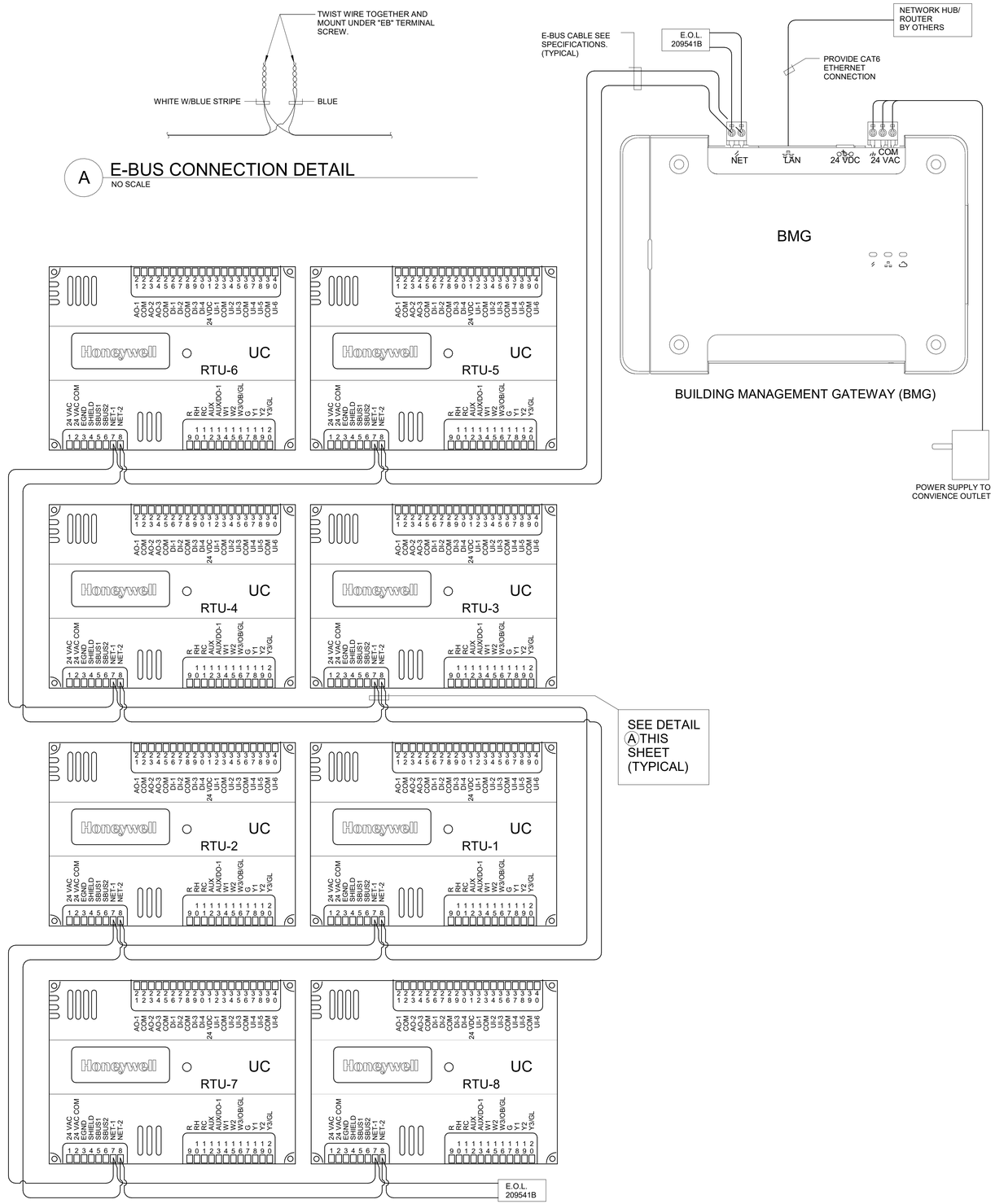

E-BUS WIRING DIAGRAM

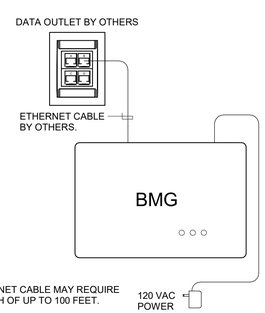

NOTE:

1. ETHERNET CABLE MAY REQUIRE LENGTH OF UP TO 100 FEET.

BMG WIRING DIAGRAM

bhd ARCHITECTS
www.bhdarchitects.com
Phone 801.571.0010
Fax 801.571.0303
Toll Free 888.571.0010
65 East Wadsworth Park Drive
Suite 205 Draper, Utah 84020

LICENSED PROFESSIONAL ENGINEER
04/05/2024
No. 190991
BENJAMIN L. DAVIS
STATE OF UTAH

181 East 5600 South
Murray, Utah 84107
O: (801)530-3148
www.vbfa.com
VBFA Project #: 240027
VBFA

THE CHURCH OF JESUS CHRIST OF LATTER-DAY SAINTS

Tooele UT Deseret Peak Sr Seminary

Approximately 2234 North Berra Boulevard, Tooele, Utah
40.569694, -112.303347

Date:	BHD #:	County Parcel:	Plan Series:	Owner #:
3 Apr 2024	2326	02-143-0-0115	Custom 5 CR	501-3450

Drawing Issue and Revision Schedule

#	Date	Description
1	3 Apr 2024	Bid Documents

ATC Wiring Diagrams

ME702

4/8/2024 2:02:20 PM

ABBREVIATIONS

NOTE: ALL ABBREVIATIONS MAY NOT BE USED.

1P	SINGLE POLE
1PH	SINGLE-PHASE
1WAY	ONE-WAY
2/C	TWO-CONDUCTOR
2WAY	TWO-WAY
3/C	THREE-CONDUCTOR
3WAY	THREE-WAY
4OUT	QUADRUPLE RECEPTACLE OUTLET
4PDT	FOUR-POLE DOUBLE THROW
4PST	FOUR-POLE SINGLE THROW
4W	FOUR-WIRE
4WAY	FOUR-WAY
A	ABOVE COUNTER
AC	ARMORED CABLE
ADA	AMERICANS WITH DISABILITIES ACT
ADJ	ADJACENT
AFF	ABOVE FINISHED FLOOR
AFG	ABOVE FINISHED GRADE
AIC	AMPERE INTERRUPTING CAPACITY
ALUM	ALUMINUM
AMP	AMPERE
ANN	ANNUNCIATOR
AP	ACCESS POINT (WIRELESS DATA)
AR	AS REQUIRED
ASC	AMPS SHORT CIRCUIT
ATS	AUTOMATIC TRANSFER SWITCH
AV	AUDIO VISUAL
AWG	AMERICAN WIRE GAGE
BB XFMR	BUCK-BOOST TRANSFORMER
BFF	BELOW FINISHED FLOOR
BFG	BELOW FINISHED GRADE
C	CEILING MOUNTED
CAT	CATEGORY
CATV	COMMUNITY ANTENNA TELEVISION
CB	CIRCUIT BREAKER
CCBA	CUSTOM COLOR AS SELECTED BY ARCHITECT
CCTV	CLOSED CIRCUIT TELEVISION
CF/CI	CONTRACTOR FURNISHED/ CONTRACTOR INSTALLED
CF/OI	CONTRACTOR FURNISHED/ OWNER INSTALLED
CFBA	CUSTOM FINISH AS SELECTED BY ARCHITECT
CKT	CIRCUIT
CM	CONSTRUCTION MANAGER
CND	CONDUIT
CO	CONVENIENCE OUTLET
COR	CONTRACTING OFFICER'S REPRESENTATIVE
CP	CONTROL PANEL
CT	CURRENT TRANSFORMER
CTV	CABLE TELEVISION
CU	COPPER
dBA	UNIT OF SOUND LEVEL
DPDT	DOUBLE POLE, DOUBLE THROW
DS	DISCONNECT SWITCH
E	ENHANCED
EA	EACH
EM	EMERGENCY
EMT	ELECTRICAL METALLIC TUBING
ENT	ELECTRIC NONMETALLIC TUBING
EPO	EMERGENCY POWER OFF
EQUIP	EQUIPMENT
ER	EQUIPMENT ROOM
EX	EXISTING
F	FURNITURE MOUNTED
FA	FIRE ALARM
FCP	FIRE ALARM CONTROL PANEL
FLA	FULL LOAD AMPS
FMC	FLEXIBLE METAL CONDUIT
FOB	FREIGHT ON BOARD
FPP	FIBER PATCH PANEL
FVNR	FULL VOLTAGE NON-REVERSING
FVR	FULL VOLTAGE REVERSING
GEN	GENERATOR
GFCI	GROUND FAULT INTERRUPTER
GFP	GROUND FAULT PROTECTION
GIG	GIGA HERTZ
GND	GROUND
HD	HEAVY DUTY
HID	HIGH INTENSITY DISCHARGE
HOA	HAND-OFF-AUTOMATIC
HP	HORSE POWER
HPF	HIGH POWER FACTOR
HPS	HIGH PRESSURE SODIUM
HV	HIGH VOLTAGE
HWM	HORIZONTAL WIRE MANAGEMENT
HZ	HERTZ
I/O	INPUT/ OUTPUT
IG	ISOLATED GROUND
IMC	INTERMEDIATE METAL CONDUIT
IN/IS	INSULATED/ ISOLATED
IR	INFRARED
J-BOX	JUNCTION BOX
kV	KILOVOLT
kVA	KILOVOLT AMPERE
kVAR	KILOVOLT AMPERE REACTIVE
kW	KILOWATT
kWh	KILOWATT HOUR
LED	LIGHT EMITTING DIODE
LFMC	LIQUID TIGHT FLEXIBLE METAL CONDUIT
LFNC	LIQUID TIGHT FLEXIBLE NONMETALLIC CONDUIT
LPS	LOW PRESSURE SODIUM
LRA	LOCKED ROTOR AMPS
LTG	LIGHTING
LV	LOW VOLTAGE
MATV	MASTER ANTENNA TELEVISION SYSTEM
MAX	MAXIMUM
MC	METAL CLAD
MCA	MINIMUM CIRCUIT AMPS
MCB	MAIN CIRCUIT BREAKER
MCC	MOTOR CONTROL CENTER
MCP	MOTOR CIRCUIT PROTECTION
MDP	MAIN DISTRIBUTION PANEL
MG	MOTOR GENERATOR
MH	MANHOLE
MIN	MINIMUM
MLO	MAIN LUGS ONLY
MOCP	MAXIMUM OVERCURRENT PROTECTION
MTS	MANUAL TRANSFER SWITCH
NA	NOT APPLICABLE
NC	NORMALLY CLOSED
NEC	NATIONAL ELECTRICAL CODE
NEMA	NATIONAL ELECTRICAL MANUFACTURERS ASSOCIATION
NFC	NATIONAL FIRE CODE
NFPA	NATIONAL FIRE PROTECTION ASSOCIATION
NIC	NOT IN CONTRACT
NL	NIGHT LIGHT
NO	NORMALLY OPEN
NTS	NOT TO SCALE
OC	ON CENTER
OCP	OVER CURRENT PROTECTION
OE	OWNER ELECTRONICS
OF/CI	OWNER FURNISHED/ CONTRACTOR INSTALLED
OF/OI	OWNER FURNISHED/ OWNER INSTALLED
OFP	OBTAIN FROM PLANS
OH DR	OVERHEAD (COILING) DOOR
OL	OVERLOAD
PB	PUSHBUTTON
PF	POWER FACTOR
PH	PHASE
PNL	PANEL
PNM	PLENUM
PR	PAIR
PS	POWER SUPPLY
PT	POTENTIAL TRANSFORMER
PTZ	PAN/TILT/ZOOM
QTY	QUANTITY
R	REMOVE
RCP	REFLECTED CEILING PLAN
RMC	RIGID METAL CONDUIT
RNC	RIGID NONMETAL CONDUIT
RPM	REVOLUTIONS PER MINUTE
RPP	RISER PATCH PANEL
RR	REMOVE AND RELOCATE
S/S	START/STOP
SCA	SHORT CIRCUIT AMPS
SCBA	STANDARD COLOR AS SELECTED BY ARCHITECT
SF	SQUARE FOOT (FEET)
SFBA	STANDARD FINISH AS SELECTED BY ARCHITECT
SPD	SURGE PROTECTIVE DEVICE
SPDT	SINGLE POLE, DOUBLE THROW
SPEC	SPECIFICATION
SPP	STATION PATCH PANEL
SPST	SINGLE POLE, SINGLE THROW
ST	SINGLE THROW
SWBD	SWITCHBOARD
SWGR	SWITCHGEAR
TL	TWIST LOCK
TP	TELEPHONE POLE
TP	TWISTED PAIR
TR	TELECOMMMUNICATIONS ROOM
TTB	TELEPHONE TERMINAL BOARD
TV	TELEVISION
TVSS	TRANSIENT VOLTAGE SURGE SUPPRESSER
TYP	TYPICAL
UF	UNDERFLOOR
UGND	UNDERGROUND
UPS	UNINTERRUPTIBLE POWER SUPPLY
V	VOLTS
VA	VOLT AMPERE
VFC/VFD	VARIABLE FREQUENCY MOTOR CONTROLLER
VWM	VERTICAL WIRE MANAGEMENT
W/	WITH
W/O	WITHOUT
WP	WEATHERPROOF
WPP	WIRELESS PATCH PANEL
XFMR	TRANSFORMER

DEFINITIONS

NOTE: ALL DEFINITIONS MAY NOT BE USED.

INDICATED: THE TERM "INDICATED" REFERS TO GRAPHIC REPRESENTATIONS, NOTES, OR SCHEDULES ON THE DRAWINGS, OTHER PARAGRAPHS OR SCHEDULES IN THE SPECIFICATIONS, AND SIMILAR REQUIREMENTS IN THE CONTRACT DOCUMENTS. WHERE TERMS SUCH AS "SHOWN", "NOTED", "SCHEDULED", AND "SPECIFIED" ARE USED, IT IS TO HELP THE READER LOCATE THE REFERENCE, NO LIMITATION ON LOCATION IS INTENDED.

DIRECTED: TERMS SUCH AS "DIRECTED", "REQUESTED", AUTHORIZED", "SELECTED", "APPROVED", "REQUIRED", AND "PERMITTED" MEAN "DIRECTED BY THE ENGINEER", "REQUESTED BY THE ENGINEER", AND SIMILAR PHRASES.

APPROVED: THE TERM "APPROVED", WHERE USED IN CONJUNCTION WITH THE ENGINEER'S ACTION ON THE CONTRACTOR'S SUBMITTALS, APPLICATIONS, AND REQUESTS, IS LIMITED TO THE ENGINEER'S DUTIES AND RESPONSIBILITIES AS STATED IN GENERAL AND SUPPLEMENTARY CONDITIONS.

FURNISH: THE TERM "FURNISH" IS USED TO MEAN "SUPPLY AND DELIVER TO THE PROJECT SITE, READY FOR UNLOADING, UNPACKING, ASSEMBLY, INSTALLATION, AND SIMILAR OPERATIONS."

INSTALL: THE TERM "INSTALL" IS USED TO DESCRIBE OPERATIONS AT PROJECT SITE INCLUDING THE ACTUAL "UNLOADING, UNPACKING, ASSEMBLY, ERECTION, PLACING, ANCHORING, APPLYING, WORKING TO DIMENSION, FINISHING, CURING, PROTECTING, CLEANING, AND SIMILAR OPERATIONS."

PROVIDE: THE TERM "PROVIDE" MEANS "TO FURNISH AND INSTALL, COMPLETE AND READY FOR THE INTENDED USE."

INSTALLER: AN "INSTALLER" IS THE CONTRACTOR OR AN ENTITY ENGAGED BY THE CONTRACTOR, EITHER AS AN EMPLOYEE, SUBCONTRACTOR, OR SUB-SUBCONTRACTOR, FOR PERFORMANCE OF A PARTICULAR CONSTRUCTION ACTIVITY, INCLUDING INSTALLATION, ERECTION, APPLICATION, AND SIMILAR OPERATIONS. INSTALLERS ARE REQUIRED TO BE EXPERIENCED IN THE OPERATIONS THEY ARE ENGAGED TO PERFORM.

TECHNOLOGY SYSTEMS: THE TERM "TECHNOLOGY SYSTEMS" IS USED TO DESCRIBE ALL LOW VOLTAGE SYSTEMS GENERALLY REFERRED TO AS "SPECIAL SYSTEMS". THESE SYSTEMS INCLUDE BUT ARE NOT NECESSARILY LIMITED TO ALL SYSTEMS WHICH UTILIZE VOLTAGES OF LESS THAN 71 VOLTS SUCH AS SOUND SYSTEMS, VIDEO SYSTEMS, TV SYSTEMS, SECURITY SYSTEMS, VOICE AND DATA CABLING SYSTEMS, ETC...

SITE COORDINATION

THE LOCATION, CAPACITY, AND VOLTAGE OF THE LINES ARE ALL IN ACCORDANCE WITH DATA GIVEN THIS OFFICE BY THE UTILITY COMPANY. COORDINATE WITH THE LOCAL UTILITY COMPANY FOR THE INSTALLATION OF THE ELECTRICAL SERVICE. COMPLY WITH UTILITY REGULATIONS. REPORT DISCREPANCIES TO THE ENGINEER.

ELECTRIC UTILITY

ROCKY MOUNTAIN POWER
555 NORTH MAIN STREET
TOOELE, UT 84074

PERSON CONTACTED: LISA BAKER
DATE: 2024.04.03
PHONE NUMBER: 435-833-7925
EMAIL: Lisa.Baker@rockymountainpower.net

ELECTRICAL SHEET INDEX

GENERAL ELECTRICAL NOTES

1. CLARIFICATION METHODS: AT THE TIME OF BIDDING, BIDDERS SHALL FAMILIARIZE THEMSELVES WITH THE DRAWINGS AND SPECIFICATIONS. ANY QUESTIONS, MISUNDERSTANDINGS, CONFLICTS, DELETIONS, DISCONTINUED PRODUCTS, CATALOG NUMBER DISCREPANCIES, DISCREPANCIES BETWEEN THE EQUIPMENT SUPPLIED AND THE INTENT OR FUNCTION OF THE EQUIPMENT, ETC, SHALL BE SUBMITTED TO THE ARCHITECT/ENGINEER IN WRITING FOR CLARIFICATION PRIOR TO ISSUANCE OF THE FINAL ADDENDUM AND BIDDING OF THE PROJECT. WHERE DISCREPANCIES OR MULTIPLE INTERPRETATIONS OCCUR, THE MOST STRINGENT (WHICH IS GENERALLY RECOGNIZED AS THE MOST COSTLY) THAT MEETS THE INTENT OF THE DOCUMENTS SHALL BE ENFORCED.

2. OWNER FURNISHED ITEMS: THE OWNER WILL FURNISH MATERIAL AND EQUIPMENT AS INDICATED IN THE CONTRACT DOCUMENTS TO BE INCORPORATED INTO THE WORK. THESE ITEMS ARE ASSIGNED TO THE INSTALLER AND COSTS FOR RECEIVING, HANDLING, STORAGE, IF REQUIRED, AND INSTALLATION ARE INCLUDED IN THE CONTRACT SUM.

   A. THE INSTALLER'S RESPONSIBILITIES ARE THE SAME AS IF THE INSTALLER FURNISHED THE MATERIALS OR EQUIPMENT.

   B. THE OWNER WILL ARRANGE AND PAY FOR DELIVERY OF OWNER FURNISHED ITEMS FREIGHT ON BOARD JOB SITE AND THE INSTALLER WILL INSPECT DELIVERIES FOR DAMAGE. IF OWNER FURNISHED ITEMS ARE DAMAGED, DEFECTIVE OR MISSING, DOCUMENT DAMAGED ITEMS WITH THE TRANSPORT COMPANY AND THE OWNER WILL ARRANGE FOR REPLACEMENT. THE OWNER WILL ALSO ARRANGE FOR MANUFACTURER'S FIELD SERVICES, AND THE DELIVERY OF MANUFACTURER'S WARRANTIES AND BONDS TO THE INSTALLER.

   C. THE INSTALLER IS RESPONSIBLE FOR DESIGNATING THE DELIVERY DATES OF OWNER FURNISHED ITEMS AND FOR RECEIVING, UNLOADING AND HANDLING OWNER FURNISHED ITEMS AT THE SITE.THE INSTALLER IS RESPONSIBLE FOR PROTECTING OWNER FURNISHED ITEMS FROM DAMAGE, INCLUDING DAMAGE FROM EXPOSURE TO THE ELEMENTS, AND TO REPAIR OR REPLACE ITEMS DAMAGED AS A RESULT OF HIS OPERATIONS.

3. EXPOSED STRUCTURE AREAS (EXCLUDING MECHANICAL, ELECTRICAL, AND COMMUNICATION SPACES): INSTALL RACEWAYS BETWEEN DECK AND STRUCTURE WHEREVER POSSIBLE IN EXPOSED STRUCTURE CEILING AREAS. ROUTE RACEWAYS IN CONCEALED AREAS WHEREVER POSSIBLE. REFER ALL CONDITIONS WHERE RACEWAYS MUST BE INSTALLED WHICH CANNOT COMPLY WITH THESE REQUIREMENTS TO THE ARCHITECT.

4. SUBMITTALS: PROVIDE ORIGINAL ELECTRONIC PDF FORMAT, BOUND, BOOKMARKED (EACH SECTION AND PRODUCT), AND HIGHLIGHTED. JOB NAME AND SUBCONTRACTOR SHALL BE ON THE FRONT COVER. PREPARE INDEX OF EQUIPMENT SUBMITTED IN EACH TAB.

5. REFLECTED CEILING PLANS: COORDINATE THE LOCATION OF LIGHT FIXTURES WITH THE ARCHITECTURAL REFLECTED CEILING PLANS. REFER ALL DISCREPANCIES TO THE ARCHITECT AND ENGINEER.

6. ALL WORK SHALL BE DONE ACCORDING TO THE CURRENT NATIONAL ELECTRIC CODE (NEC), IBC, NFPA, AND IFC. COMPLIANCE AND FINAL APPROVAL IS SUBJECT TO THE ON SITE FIELD INSPECTION OF THE AHJ.

bhd ARCHITECTS
www.bhdarchitects.com
Phone 801.571.0010
Fax 801.571.0303
Toll Free 888.571.0010
65 East Wadsworth Park Drive
Suite 205 Draper, Utah 84020

LICENSED PROFESSIONAL ENGINEER
No. 5148728
DAVID G. HINCKLEY
4-8-24
STATE OF UTAH

SPECTRUM ENGINEERS
324 S. State St., Suite 400
Salt Lake City, UT 84111
800-678-7077
801-328-5151
fax: 801-328-5155
www.spectrum-engineers.com

THE CHURCH OF JESUS CHRIST OF LATTER-DAY SAINTS

Tooele UT Deseret Peak Sr Seminary

Approximately 2234 North Benn Boulevard, Tooele, Utah
40.569994, -112.303347

Date: 3 Apr 2024
BHD #: 2326
County Parcel: 02-143-0-0115
Plan Series: Custom 5 CR
Owner #: 501-3450

Sheet Issue and Revision Schedule

#	Date	Description
1	3 Apr 2024	Bid Documents

Sheet Index and General Notes

EE001

SYMBOLS LEGEND

SYMBOL	DESCRIPTION
REFERENCE AND LINE SYMBOLS	
A5 / E-501	DETAIL INDICATOR: A5 INDICATES DETAIL NUMBER, E-501 INDICATES DRAWING SHEET WHERE DETAIL IS SHOWN.
ROOM NAME 100	ROOM IDENTIFIER WITH ROOM NAME AND NUMBER.
1	KEYNOTE INDICATOR.
1	REVISION INDICATOR.
CU-1	EQUIPMENT INDICATOR.
X-X / XMDP	MECHANICAL EQUIPMENT INDICATOR. "X-X" INDICATES EQUIPMENT MARK SHOWN ON EQUIPMENT SCHEDULE. "XMDP" IDENTIFIES PANEL EQUIPMENT IS CIRCUITED TO. REFER TO EQUIPMENT SCHEDULE FOR ADDITIONAL INFORMATION.
	BREAK, STRAIGHT: TO BREAK PARTS OF DRAWING
	BREAK, ROUND
WIRING METHODS	
	WIRING.
A-1	SINGLE BRANCH CIRCUIT HOME RUN TO PANELBOARD WITH DEDICATED NEUTRAL CONDUCTOR. LETTER AND NUMBER NOTATION IDENTIFY PANEL AND CIRCUIT NUMBER.
A-1,3,5	BRANCH CIRCUIT HOME RUN TO PANELBOARD: NUMBER OF ARROWS INDICATES NUMBER OF CIRCUITS. LETTER AND NUMBER NOTATIONS IDENTIFY PANEL AND CIRCUIT NUMBERS.
1 A-1,3,5	BRANCH CIRCUIT HOME RUN TO PANELBOARD: NUMBER OF ARROWS INDICATES NUMBER OF CIRCUITS. LETTER AND NUMBER NOTATIONS IDENTIFY PANEL AND CIRCUIT NUMBERS. NUMBER IN BOX REFERS TO THE CONDUCTOR AND CONDUIT SCHEDULE.
	LOW VOLTAGE WIRING: DIVIDE, MEDIUM LINE.
	CONDUIT STUB. DIMENSION RECORD DRAWINGS AND MARK.
1	CONDUCTOR & CONDUIT ("CC") SCHEDULE INDICATOR. REFER TO ONE-LINE DIAGRAM.
HC	ADA ACCESS PUSH PLATE
	JUNCTION BOX.
C	JUNCTION BOX, CEILING.
SC	JUNCTION BOX, SYSTEMS FURNITURE COMMUNICATION CONNECTION.
SP	JUNCTION BOX, SYSTEMS FURNITURE POWER CONNECTION.
PB	PULL BOX.
	MECHANICAL EQUIPMENT CONNECTION. REFER TO EQUIPMENT SCHEDULE FOR REQUIREMENTS.
WIRING DEVICES	
	RECEPTACLE, DUPLEX: NEMA 5-20R.
A	RECEPTACLE, DUPLEX, ABOVE COUNTER: NEMA 5-20R.
C	RECEPTACLE, DUPLEX, CEILING: NEMA 5-20R.
DF	RECEPTACLE, DUPLEX WITH GROUND FAULT CIRCUIT INTERRUPTER, DRINKING FOUNTAIN: CONCEAL WATER COOLER RECEPTACLE BEHIND WATER COOLER. SEE MECHANICAL/PLUMBING SHOP DRAWINGS FOR INSTALLATION REQUIREMENTS.
S	RECEPTACLE, DUPLEX, SWITCHED: NEMA 5-20R.
T	RECEPTACLE, DUPLEX, TAMPER RESISTANT: NEMA 5-20R.
W	RECEPTACLE, DUPLEX WITH GROUND FAULT CIRCUIT INTERRUPTER, WET LABEL, "WEATHERPROOF IN USE": NEMA 5-20R.
	RECEPTACLE, DUPLEX WITH GROUND FAULT CIRCUIT INTERRUPTER: NEMA 5-20R.
WP	RECEPTACLE, DUPLEX WITH GROUND FAULT CIRCUIT INTERRUPTER, WEATHERPROOF: NEMA 5-20R.
	RECEPTACLE, QUADRAPLEX: NEMA 5-20R.
	RECEPTACLE, QUADRAPLEX WITH GROUND FAULT CIRCUIT INTERRUPTER: NEMA 5-20R.
	RECEPTACLE, SPECIAL PURPOSE. PROVIDE RECEPTACLE TO MATCH EQUIPMENT PLUG.
R	RECEPTACLE, RANGE: NEMA 14-50R.
	RECEPTACLE, SINGLE PLEX, WITH USB OUTLET
FB#	FLUSH FLOOR BOX. "#" SHOWN ON DRAWINGS. REFER TO WIRING DEVICE SCHEDULE IN THE ELECTRICAL SPECIFICATIONS FOR CONFIGURATION AND DEVICES.
	SWITCH, DIMMER.
X $	SWITCH, SINGLE POLE ("x" INDICATES FIXTURES CONTROLLED).
X $2	SWITCH, DOUBLE POLE ("x" INDICATES FIXTURES CONTROLLED).
X $3	SWITCH, THREE-WAY ("x" INDICATES FIXTURES CONTROLLED).
X $4	SWITCH, FOUR-WAY ("x" INDICATES FIXTURES CONTROLLED).

SYMBOLS LEGEND

SYMBOL	DESCRIPTION
ELECTRICAL POWER AND DISTRIBUTION	
	CIRCUIT BREAKER, MOLDED CASE (ONE-LINE DIAGRAM).
	CIRCUIT BREAKER, SOLID STATE (ONE-LINE DIAGRAM).
	MOTOR.
	TRANSFORMER (ONE-LINE DIAGRAM).
"1DPHA"	DISTRIBUTION PANELBOARD, MOTOR CONTROL CENTER, PLUG-IN BUSWAY, MEDIUM VOLTAGE SWITCHBOARD (ONE-LINE DIAGRAM).
"1H"	PANELBOARD (ONE-LINE DIAGRAM).
225/3 "1H"	PANELBOARD WITH MAIN LUGS ONLY. BUS SIZE AND PHASE AS SHOWN (ONE-LINE DIAGRAM).
225/3 "1H"	PANELBOARD WITH MAIN CIRCUIT BREAKER. SIZE AND PHASE AS SHOWN (ONE-LINE DIAGRAM).
225/3 "1H" 60/3	PANELBOARD WITH MAIN AND SUB FEED CIRCUIT BREAKER (ONE-LINE DIAGRAM).
225/3 "1H" 225/3 "1H"	PANELBOARD WITH SUB FEED LUGS (ONE-LINE DIAGRAM).
225/3 "1H" "1H"	PANELBOARD WITH CIRCUIT BREAKER AND SUB FEED LUGS (ONE-LINE DIAGRAM).
	CT CABINET PER UTILITY'S REQUIREMENTS (ONE-LINE DIAGRAM).
	TRANSFER SWITCH (ONE-LINE DIAGRAM).
DMM	DIGITAL MULTIMETER (ONE-LINE DIAGRAM).
	EARTH GROUND (ONE-LINE DIAGRAM).
M	METER.
	DISCONNECT SWITCH, FUSED.
	DISCONNECT SWITCH, UNFUSED.
	STARTER, COMBINATION WITH DISCONNECT SWITCH.
	STARTER OR MOTOR CONTROLLER.
	PUSHBUTTON.
	PUSHBUTTONS, MOTOR CONTROL.
	PANELBOARD CABINET, FLUSH MOUNTED.
	PANELBOARD CABINET, SURFACE MOUNTED, 1 SECTION.
	PANELBOARD CABINET, SURFACE MOUNTED, 2 SECTION.
DP#__	DISTRIBUTION PANEL OR SWITCHBOARD.
LP	LIGHTING RELAY, CONTACTOR PANEL, OR DIMMING ENCLOSURE.
$ST	SWITCH, TOGGLE MOTOR STARTER WITH OVERLOAD PROTECTION.
	TRANSFORMER (SEE ONE-LINE FOR SIZE)
STRUCTURED CABLING	
X	TELEPHONE, WALL MOUNTED ("X" INDICATES QUANTITY OF CABLES).
	DATA CONNECTION: WIRELESS ACCESS POINT (WAP). REQUIRES (2) DATA DROPS PER DEVICE
	TELEPHONE TERMINAL BOARD, FIRE TREATED PLYWOOD PAINTED.

SYMBOLS LEGEND

SYMBOL	DESCRIPTION
LIGHTING	
(W-3)	FIXTURE IDENTIFICATION: (W-3) INDICATES FIXTURE TYPE AS SCHEDULED.
(W-3E)	FIXTURE IDENTIFICATION: EMERGENCY LIGHTING FIXTURE WITH BATTERY PACK AND/ OR GENERATOR AND/ OR CENTRALIZED INVERTER AND/ OR CENTRALIZED UPS CONNECTION AS INDICATED IN PLANS. (W-3E) INDICATES FIXTURE TYPE AS SCHEDULED.
EM	EMERGENCY.
NL	NIGHT LIGHT: DO NOT SWITCH.
↑	EGRESS DIRECTION ARROW (EXIT SIGNS).
	EXIT SIGN: SINGLE FACE; CEILING MOUNTED
	EXIT SIGN: SINGLE FACE; WALL MOUNTED
	EXIT SIGN: DOUBLE FACE; CEILING MOUNTED
	EXIT SIGN: DOUBLE FACE; WALL MOUNTED
LIGHTING CONTROL	
	OCCUPANCY SENSOR, DUAL TECHNOLOGY, OMNI-DIRECTIONAL, CEILING.
	OCCUPANCY SENSOR, DUAL TECHNOLOGY, WALL.
	OCCUPANCY SENSOR, DUAL TECHNOLOGY, DIRECTIONAL.
P	PHOTOCELL.
P	PHOTOCELL, WALL MOUNTED.
	VACANCY SENSOR, DUAL TECHNOLOGY, OMNI-DIRECTIONAL, CEILING.
	VACANCY SENSOR, DUAL TECHNOLOGY, WALL.
	CEILING FAN.
$	SWITCH/OCCUPANCY SENSOR COMBO, DUAL TECHNOLOGY, WALL.
$	SWITCH/VACANCY SENSOR COMBO, DUAL TECHNOLOGY, WALL.
	DIMMER SWITCH/OCCUPANCY SENSOR COMBO, DUAL TECHNOLOGY, WALL.
	DIMMER SWITCH/VACANCY SENSOR COMBO, DUAL TECHNOLOGY, WALL.
a,b	LOW VOLTAGE DIGITAL LIGHTING CONTROL SWITCH: LETTER "a,b" INDICATES ZONING WHERE SHOWN (REFER TO PLANS, SCHEDULES, AND DETAILS FOR EXACT BUTTON CONFIGURATION AND PROGRAMMING REQUIREMENTS)
RC	DIGITAL LIGHTING ROOM CONTROLLER
FIRE ALARM	
FACP	FIRE ALARM CONTROL PANEL, SEMI-RECESSED.
CM	CONTROL MODULE.
MM	MONITOR MODULE.
F	FIRE ALARM MANUAL PULL STATION.
R	SHUT DOWN RELAY: INSTALL RELAY IN CONTROL CIRCUIT OF EQUIPMENT TO BE CONTROLLED IN THE EVENT OF A FIRE.
FS	WATER FLOW SWITCH. FLOW SWITCHES SHALL BE PROVIDED AND INSTALLED BY FIRE SPRINKLER CONTRACTOR AND SHALL BE CONNECTED TO LOCATIONS SHOWN ON THE FIRE SPRINKLER SHOP DRAWINGS.
VS	VALVE SUPERVISORY SWITCH, TAMPER SWITCH. TAMPER SWITCHES SHALL BE PROVIDED AND INSTALLED BY FIRE SPRINKLER CONTRACTOR AND SHALL BE CONNECTED TO LOCATIONS SHOWN ON THE FIRE SPRINKLER SHOP DRAWINGS.
PS	PRESSURE SUPERVISORY SWITCH. PRESSURE SWITCHES SHALL BE PROVIDED AND INSTALLED BY FIRE SPRINKLER CONTRACTOR AND SHALL BE CONNECTED TO LOCATIONS SHOWN ON THE FIRE SPRINKLER SHOP DRAWINGS..
	DETECTOR, SMOKE.
CO	DETECTOR, CARBON MONOXIDE.
75	STROBE, WALL MOUNTED. SUBSCRIPT INDICATES CANDELA RATING.
WP	ALARM, HORN/SPEAKER, WALL MOUNTED, WEATHERPROOF.
75	ALARM, HORN/STROBE, WALL MOUNTED, ONE ASSEMBLY. SUBSCRIPT INDICATES CANDELA RATING.
	SPEAKER, WALL MOUNTED, EVACUATION.
	SPEAKER, WALL MOUNTED, EVACUATION, COMBINATION STROBE.
75	SPEAKER, WALL MOUNTED, EVACUATION, COMBINATION STROBE. SUBSCRIPT INDICATES CANDELLA RATING.
	BELL, ELECTRIC, 120V FROM ELECTRICAL SYSTEM OR 24V FROM FIRE ALARM SYSTEM

bhd ARCHITECTS
www.bhdarchitects.com
Phone 801.571.0010
Fax 801.571.0303
Toll Free 888.571.0010
65 East Wadsworth Park Drive
Suite 205 Draper, Utah 84020

LICENSED PROFESSIONAL ENGINEER
No. 5148728
DAVID G. HINCKLEY
4-8-24
STATE OF UTAH

SPECTRUM ENGINEERS
324 S. State St., Suite 400
Salt Lake City, UT 84111
800-678-7077
801-328-5151
fax: 801-328-5155
www.spectrum-engineers.com

THE CHURCH OF JESUS CHRIST OF LATTER-DAY SAINTS

Tooele UT Deseret Peak Sr Seminary

Approximately 2234 North Berra Boulevard, Tooele, Utah
40.549194, -112.30347

Date: 3 Apr 2024 **BHD #:** 2326 **County Parcel:** 02-143-0-0115 **Plan Series:** Custom 5 CR **Owner #:** 501-3450

Sheet Issue and Revision Schedule

#	Date	Description
1	3 Apr 2024	Bid Documents

Symbols Legend

EE002

4/8/2024 2:02:22 PM

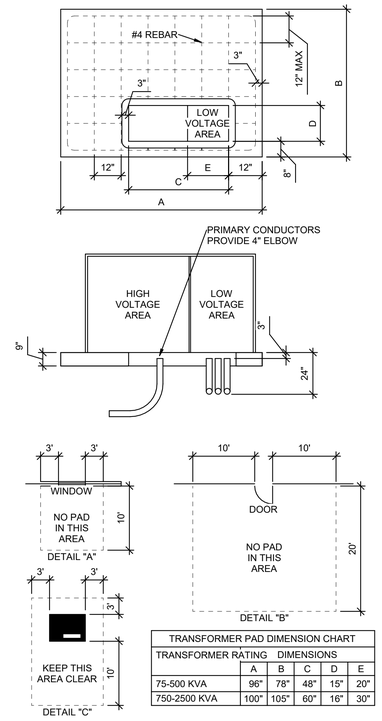

TRANSFORMER PAD DIMENSION CHART					
TRANSFORMER RATING	DIMENSIONS				
	A	B	C	D	E
75-500 KVA	96"	78"	48"	15"	20"
750-2500 KVA	100"	105"	60"	16"	30"

CONTRACTOR GENERAL NOTES:

1. SITE PREPARATION. ALL SOIL BENEATH THE PAD SITE MUST BE COMPACTED AND LEVEL PRIOR TO SETTING OR POURING THE PAD TO PREVENT SETTLING.
2. CONCRETE. STEEL REINFORCEMENT SHALL BE #4 BARS, PLACED ACCORDING TO THE DRAWING. THE PAD MUST BE POURED AT LEAST SEVEN FULL DAYS PRIOR TO SETTING THE TRANSFORMER. THE FINISHED SURFACE MUST BE COMPLETELY FLAT AND LEVEL. SEE STANDARD 73 036 FOR CONCRETE SPECIFICATIONS.
3. PREFABRICATION. THE PAD MAY EITHER BE CONSTRUCTED ON THE SITE OR PREFABRICATED ACCORDING TO SPECIFICATIONS.
4. CONDUIT WINDOW LAYOUT. LOW VOLTAGE CONDUITS SHALL BE FORMED AS TIGHTLY AS POSSIBLE AGAINST THE RIGHT SIDE OF THE OPENING AND SHALL IN NO CASE EXTEND FURTHER THAN 20" FROM THE RIGHT SIDE OF THE CONDUIT WINDOW ON THE SMALL PAD OR 30" ON THE LARGE PAD. NO MORE THAN 8 CONDUITS WILL BE USED ON THE LOW VOLTAGE SIDE (NOT INCLUDING THE METERING CONDUIT). DO NOT PUT ANY CONCRETE IN OR UNDER THE CONDUIT WINDOW. USE SOIL TO SEPARATE CONDUITS. BELL ENDS ARE REQUIRED FOR ALL METAL CONDUIT, BUT NOT FOR PLASTIC CONDUIT.
5. CLEARANCES. THE FRONT OF THE PAD SHOULD ALWAYS FACE AWAY FROM ADJACENT STRUCTURES AND BE FREE OF OBSTRUCTIONS. AT LEAST 3 FEET MUST SEPARATE THE EDGES OF THE PAD FROM ANY ADJACENT STRUCTURE. THE EDGES OF THE PAD MUST BE AT LEAST 10 FEET FROM ANY COMBUSTIBLE STRUCTURE. IF AN ADJACENT STRUCTURE HAS ANY OVERHANG OR EAVE WITHIN 27 VERTICAL FEET OF THE TOP OF THE PAD, CLEARANCES MUST BE MEASURED FROM THE OUTSIDE OF THE OVERHANG. THE PAD MUST NOT BE PLACED IN AN AREA 10 FEET IN LINE WITH OR 3 FEET TO EITHER SIDE OF ANY WINDOW IN AN ADJACENT STRUCTURE (SEE DETAIL "A"). CLEARANCE FOR A DOOR MUST BE 20 FEET IN LINE WITH IT AND 10 FEET ON THE SIDES (SEE DETAIL "B"). PADS MUST NOT BE PLACED WITHIN 15 FEET OF ANY VALVE OR WITHIN 20 FEET OF ANY PLUMBING OR STORAGE FACILITY CONTAINING FLAMMABLE MATERIAL. NO WALLS, FENCES, OR ANY OTHER OBSTRUCTIONS WILL BE PLACED WITHIN 3 FEET OF THE SIDES OR BACK OF THE PAD, OR WITHIN 10 FEET OF THE FRONT OF THE PAD (SEE DETAIL "C"). THE AREA IN FRONT OF THE PAD MUST HAVE 10 FEET OF CLEAR, LEVEL WORKING AREA FOR MAINTENANCE OF THE TRANSFORMER. THE PAD MAY NOT BE PLACED IN LINE WITH AN AIR INTAKE WITHIN 32 VERTICAL FEET OF THE SURFACE PAD. ALSO VERTICALLY, IT MUST NOT BE PLACED WITHIN 12 FEET OF A DOOR OR WINDOW.
6. BARRIERS. IF THE TRANSFORMER PAD IS TO BE LOCATED IN AREAS SUBJECT TO VEHICULAR TRAFFIC, (PARKING LOTS, DRIVEWAYS, ETC) CONTACT UTAH POWER & LIGHT FOR PROTECTIVE BARRIER REQUIREMENTS.
7. IF THE TRANSFORMER WILL NOT COVER THE CABLE OPENINGS ON THESE STANDARD PADS, SEAL THE SIDES OF THE CABLE OPENING TO FIT THE TRANSFORMER USING SAKRETE OR COMPARABLE.

2 TRANSFORMER PAD DETAIL

SCALE: NTS

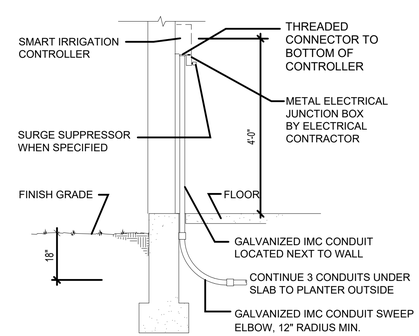

IRRIGATION CONTROLLER

NO SCALE

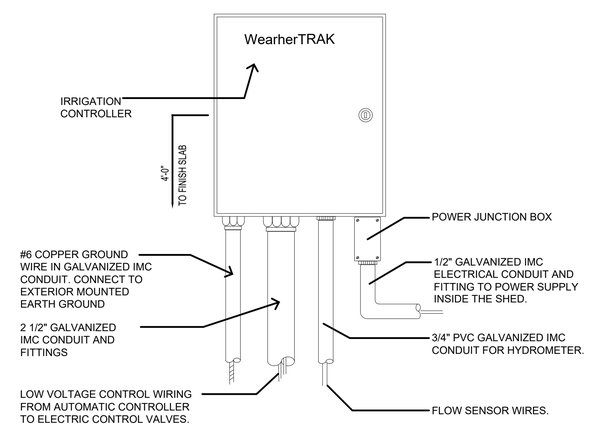

CONTROLLER

NO SCALE

1 LANDSCAPE CONDUITS

SCALE: NO SCALE

bhd ARCHITECTS
www.bhdarchitects.com
Phone 801.571.0010
Fax 801.571.0303
Toll Free 888.571.0010
65 East Wadsworth Park Drive
Suite 205 Draper, Utah 84020

LICENSED PROFESSIONAL ENGINEER
No. 5148728
DAVID G. HINCKLEY
4-8-24
STATE OF UTAH

SPECTRUM ENGINEERS
324 S. State St., Suite 400
Salt Lake City, UT 84111
800-678-7077
801-328-5151
fax: 801-328-5155
www.spectrum-engineers.com

THE CHURCH OF JESUS CHRIST OF LATTER-DAY SAINTS

Tooele UT Deseret Peak Sr Seminary

Approximately 223d North Berra Boulevard, Tooele, Utah
40.568984, -112.303347

Date: 3 Apr 2024
BHD #: 2326
County Parcel: 02-143-0-0115
Plan Series: Custom 5 CR
Owner #: 501-3450

Sheet Issue and Revision Schedule

#	Date	Description
1	3 Apr 2024	Bid Documents

Details

EE501

4/8/2024 2:02:24 PM

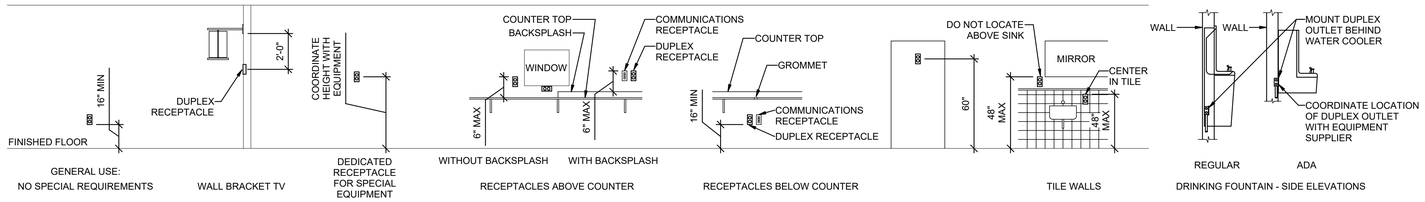

7 RECEPTACLE MOUNTING DETAILS

SCALE: NTS

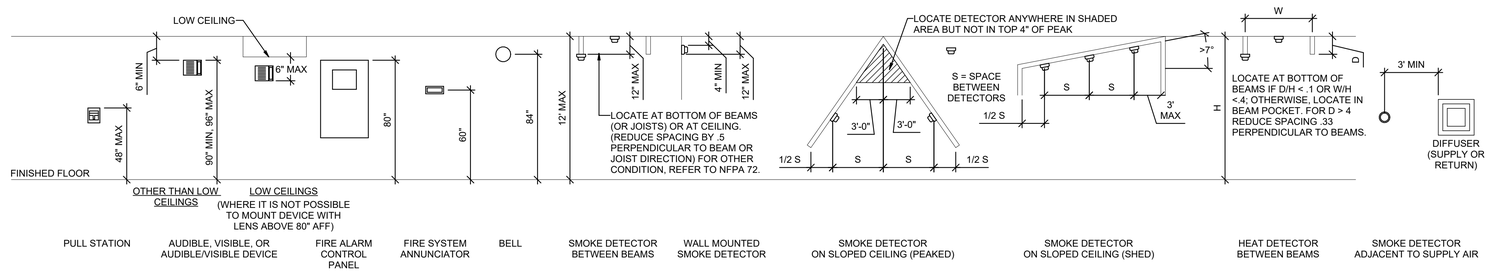

6 FIRE ALARM MOUNTING DETAILS

SCALE: NTS

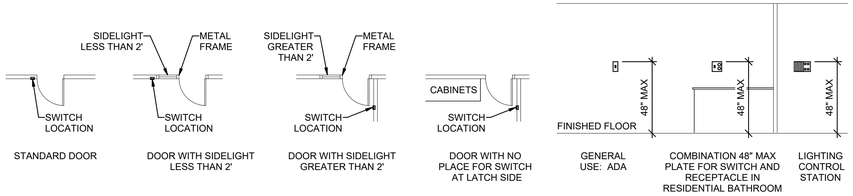

5 SWITCH MOUNTING DETAILS

SCALE: NTS

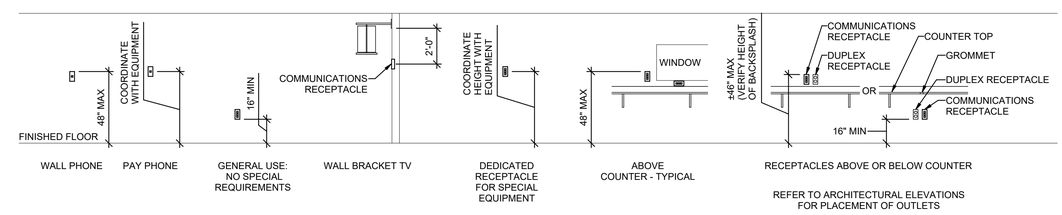

2 COMMUNICATIONS MOUNTING DETAILS

SCALE: NTS

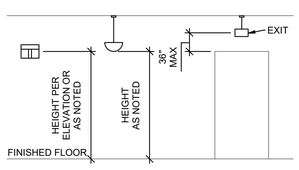

4 LIGHTING MOUNTING DETAILS

SCALE: NTS

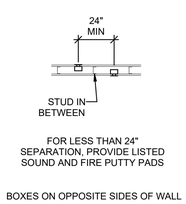

3 BOX MOUNTING DETAILS

SCALE: NTS

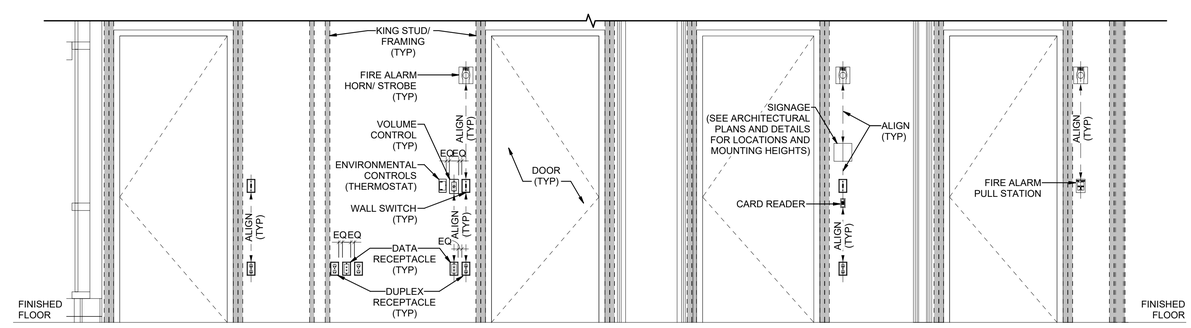

1 TYPICAL WALL MOUNTED DEVICES ALIGNMENT DETAIL

SCALE: NTS

GENERAL SHEET NOTES

1. MOUNTING HEIGHTS OF ELECTRICAL AND ELECTRONIC EQUIPMENT IN THE FOLLOWING ORDER OF PRIORITY:

   A - ELEVATIONS (ARCHITECTURAL, ELECTRICAL, MECHANICAL, ETC).

   B - EQUIPMENT SHOP DRAWINGS.

   C - FIELD INSTRUCTIONS.
2. LOCATE RECEPTACLES SERVING THE SAME TYPE OF USE AT A UNIFORM HEIGHT UNLESS DIRECTED OTHERWISE.
3. MECHANICAL, ELECTRICAL, AND COMMUNICATION ROOMS: COORDINATE LOCATION OF LIGHTING AND POWER RECEPTACLES WITH EQUIPMENT, PIPING, AND DUCTWORK. DO NOT INSTALL RECEPTACLES BEHIND EQUIPMENT OR WHERE OTHERWISE INACCESSIBLE. POSITION LIGHTING REGARDLESS OF WHERE SHOWN ON DRAWING TO PROVIDE PROPER ILLUMINATION.
4. MOUNT RECEPTACLE BOXES FOR SWITCHES AND RECEPTACLES WITH LONG AXIS OF THE DEVICE VERTICAL UNLESS OTHERWISE INDICATED.
5. SET BOXES WITH PLASTER RINGS FLUSH WITH FINISHED SURFACE.
6. LOCATE BOX COVERS OR DEVICE PLATES SO THEY WILL NOT SPAN DIFFERENT TYPES OF BUILDING FINISHES EITHER VERTICALLY OR HORIZONTALLY.
7. VERIFY ALL DOOR CONDITIONS ON ARCHITECTURAL DRAWINGS PRIOR TO INSTALLING SWITCHES.
8. LOCATE WIRING DEVICES WHICH ARE ADJACENT AND ARE COMPATIBLE VOLTAGES IN ONE PLATE.
9. WHERE DEVICES ARE LOCATED IN CLOSE PROXIMITY OF THE SAME VERTICAL PLANE, ALIGN DEVICES VERTICALLY PER THE TYPICAL WALL MOUNTED DEVICES ALIGNMENT DETAIL, UNLESS OTHERWISE INDICATED.

bhd ARCHITECTS
www.bhdarchitects.com
Phone 801.571.0010
Fax 801.571.0303
Toll Free 888.571.0010
65 East Wadsworth Park Drive
Suite 205 Draper, Utah 84020

LICENSED PROFESSIONAL ENGINEER
No. 5148728
DAVID G. HINCKLEY
4-8-24
STATE OF UTAH

SPECTRUM ENGINEERS
324 S. State St., Suite 400
Salt Lake City, UT 84111
800-678-7077
801-328-5151
fax: 801-328-5155
www.spectrum-engineers.com

THE CHURCH OF JESUS CHRIST OF LATTER-DAY SAINTS

Tooele UT Deseret Peak Sr Seminary

Approximately 2234 North Berra Boulevard, Tooele, Utah
40.549894, -112.30347

Date: 3 Apr 2024	BHD #: 2326
County Parcel: 02-143-0-0115	Plan Series: Custom 5 CR
Owner #: 501-3450	

Sheet Issue and Revision Schedule

#	Date	Description
1	3 Apr 2024	Bid Documents

Typical Mounting Details

EE701

4/8/2024 2:02:28 PM

4/8/2024 2:02:33 PM

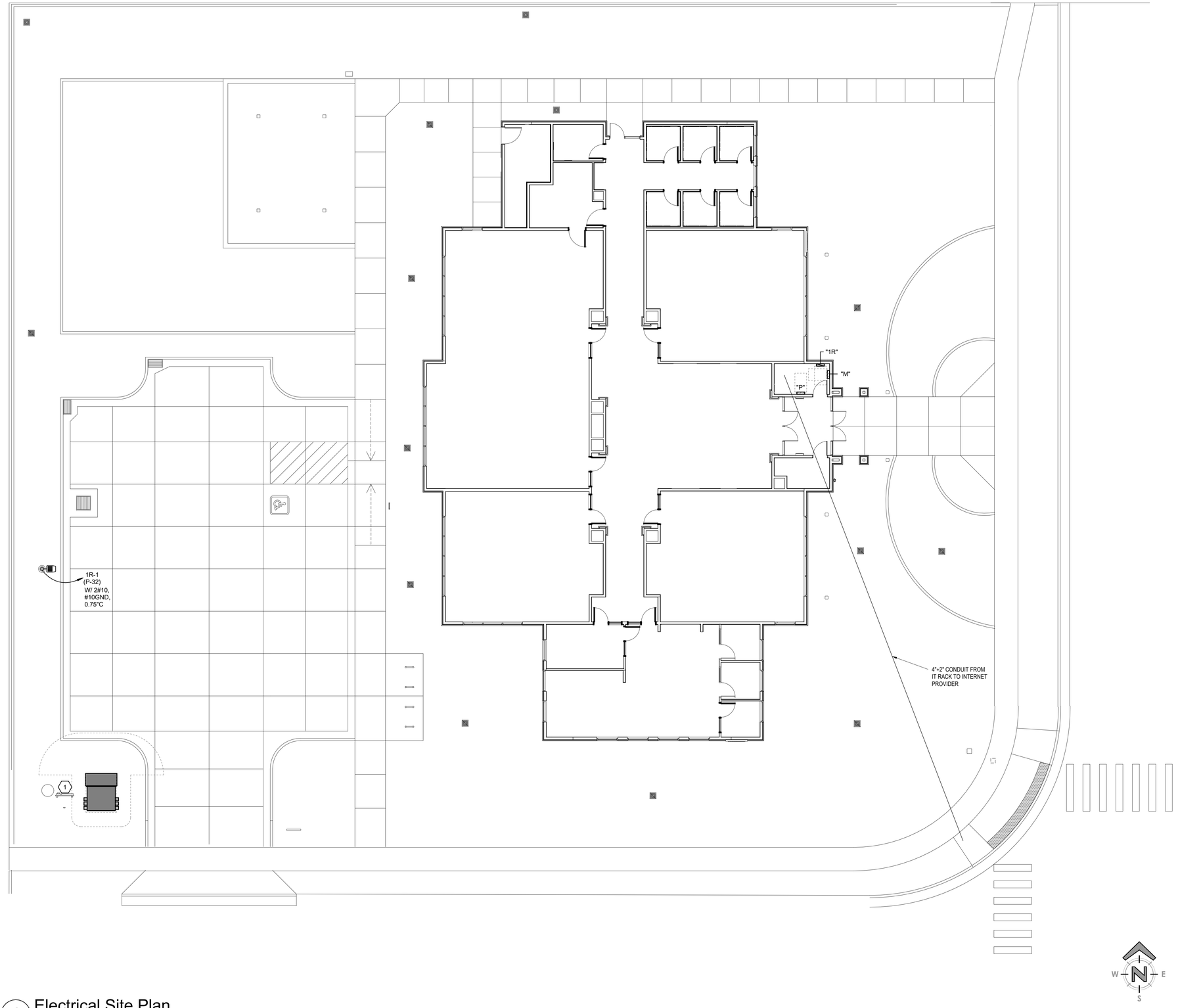

1 Electrical Site Plan
SCALE: 1" = 10'-0"

GENERAL SHEET NOTES

1 CONTRACTOR IS RESPONSIBLE FOR ALL TRENCHING, BACKFILL, AND COMPACTION ASSOCIATED TO ALL ELECTRICAL UNDERGROUND RACEWAYS AND CABLES. COORDINATE WITH ARCHITECTURAL AND CIVIL DRAWINGS. SEE UNDERGROUND RACEWAY DETAILS FOR REQUIREMENTS FOR EACH TRENCH.

2 CONTRACTOR SHALL INSTALL POLE MOUNTED LIGHTS IN STRAIGHT LINES, SQUARE, AND PLUMB. COORDINATE WITH ARCHITECT AND CIVIL DRAWINGS.

3 THE ELECTRICAL CONTRACTOR SHALL HAVE ANY AND ALL CONCRETE POLE BASES AND SLABS REVIEWED BY A STRUCTURAL ENGINEER AND SHALL MODIFY DESIGN PER STRUCTURAL ENGINEER'S AND OR AHJ'S RECOMMENDATIONS.

4 PROVIDE BATTERY PACKS IN ALL EXTERIOR FIXTURES ADJACENT TO EGRESS DOORS.

5 ALL EXTERIOR RECEPTACLES SHOWN SHALL BE NEMA 5-20R GFCI "WEATHER RESISTANT" RECEPTACLE WITH "WEATHER PROOF IN-USE COVER."

6 THE ELECTRICAL CONTRACTOR IS RESPONSIBLE FOR ALL CONCRETE/ASPHALT CUTTING AND REPLACEMENT OF CONCRETE/ASPHALT TO MATCH EXISTING ASSOCIATED WITH UNDERGROUND RACEWAYS PROVIDED AS PART OF THIS PROJECT.

7 REFER TO PLANS FOR CONSTRAINTS ON PHYSICAL DIMENSIONS AND CLEARANCE REQUIREMENTS OF EQUIPMENT. PROVIDE EQUIPMENT DIMENSIONS THAT FALL WITHIN THE CONSTRAINTS OF EACH SPECIFIC LOCATION.

8 PROVIDE SERVICE RATED EQUIPMENT AT EACH SERVICE ENTRANCE.

9 SERVICE EQUIPMENT SHALL BE LEGIBLY MARKED IN THE FIELD WITH THE MAXIMUM AVAILABLE FAULT CURRENT. VERIFY OR RE-CALCULATE THE AVAILABLE FAULT CURRENT AT THE SERVICE WHERE MODIFICATIONS TO THE ELECTRICAL INSTALLATION OCCUR. PLEASE INCLUDE NOTES IN THE ELECTRICAL DRAWINGS OR SUPPLY CALCULATIONS WHERE APPLICABLE. SEE NEC 110.24. (B)

SHEET KEYNOTES

1 MAIN ELECTRICAL PANEL AND METER.

bhd ARCHITECTS
www.bhdarchitects.com
Phone 801.571.0010
Fax 801.571.0303
Toll Free 888.571.0010
65 East Wadsworth Park Drive
Suite 205 Draper, Utah 84020

LICENSED PROFESSIONAL ENGINEER
No. 5148728
DAVID G. HINCKLEY
4-8-24
STATE OF UTAH

SPECTRUM ENGINEERS
324 S. State St., Suite 400
Salt Lake City, UT 84111
800-678-7077
801-328-5151
fax: 801-328-5155
www.spectrum-engineers.com

THE CHURCH OF
JESUS CHRIST
OF LATTER-DAY SAINTS

Tooele UT Deseret Peak Sr Seminary

Approximately 2234 North Benn Boulevard, Tooele, Utah
40.568984, -112.303347

Date: 3 Apr 2024
BHD #: 2326
County Parcel: 02-143-0-0115
Plan Series: Custom 5 CR
Owner #: 501.3450

Sheet Issue and Revision Schedule

#	Date	Description
1	3 Apr 2024	Bid Documents

Electrical Site Plan

ES101

4/8/2024 10:33:14 PM

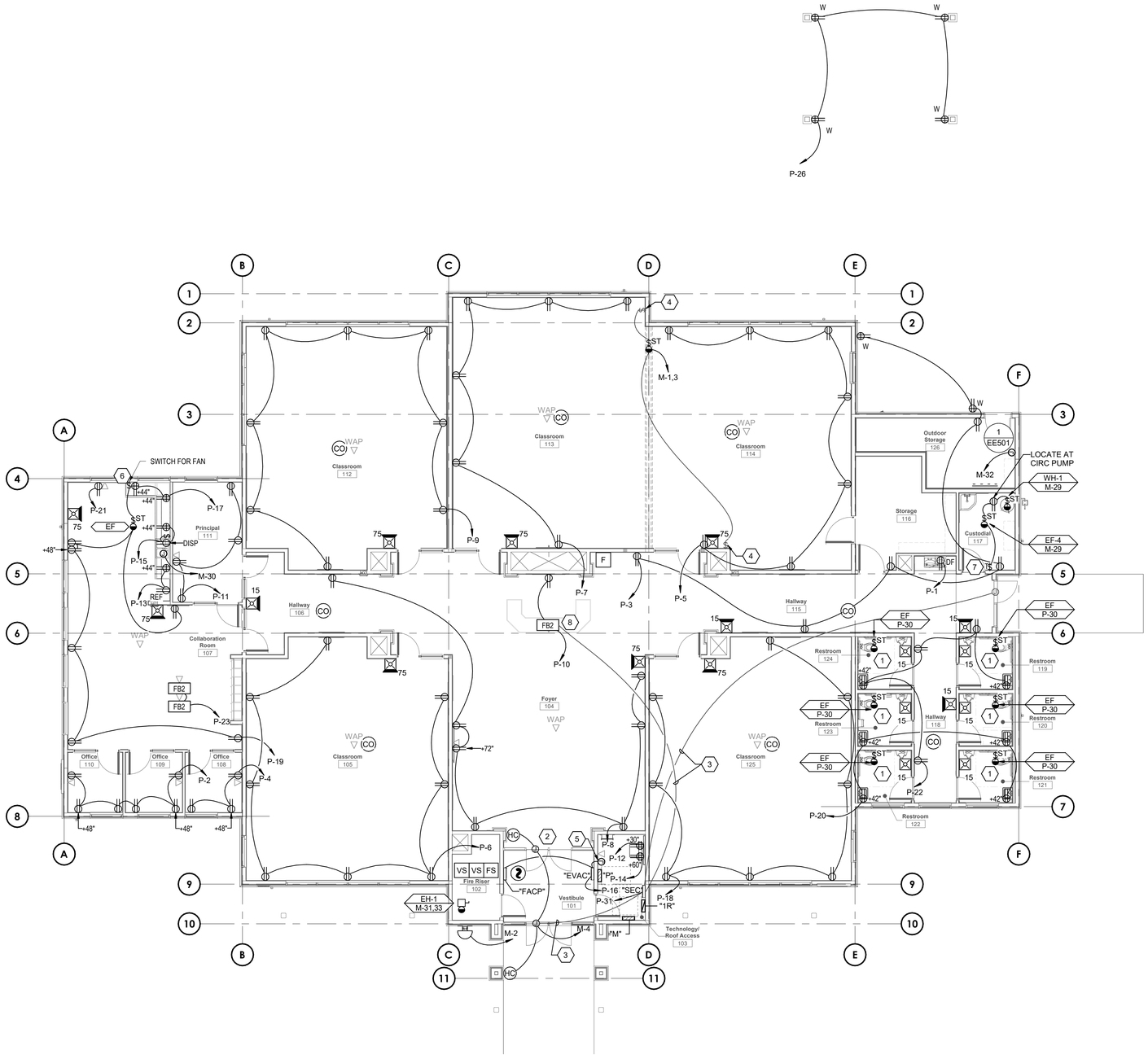

1 Power Plan
SCALE: 1/8" = 1'-0"

GENERAL SHEET NOTES

1 COORDINATE OUTLET LOCATIONS WITH FURNITURE THROUGHOUT THE PROJECT.

SHEET KEYNOTES

1 CONNECT EXHAUST FAN TO ROOM LIGHTING SO THAT IT TURNS ON/OFF WITH ROOM LIGHTING.

2 PROVIDE CONNECTIONS TO DOOR OPERATOR. COORDINATE WITH DOOR HARDWARE INSTALLER.

3 PROVIDE 0.75" CONDUIT FROM THE JUNCTION BOX AT THE SUPPORT SPECIALIST'S DESK TO THE KINDOO PANEL IN TECHNOLOGY RM 103. PROVIDE PLASTIC 4" SQUARE JUNCTION BOX WITH SINGLE GANG MUD RING ABOVE THE DOOR (DOOR 101B AND DOOR 115A), HIGH ON THE WALL, IN THE CORNER WITH A BLANK PLATE. PROVIDE 18/4 CABLE FROM THIS JUNCTION BOX TO THE ELECTRIC STRIKE IN THE DOOR AND AN 18/4 PLENUM CABLE FROM THIS JUNCTION BOX TO THE KINDOO PANEL IN TECHNOLOGY 103. COORDINATE THE SUPPORT SPECIALIST'S DURESS BUTTON LOCATION ON THE DESK WITH THE ARCHITECT.

4 SKYFOLD DOOR CONTROLLER (BY SKYFOLD DOOR SUPPLIER, WIRED BY ELECTRICAL CONTRACTOR).

5 PROVIDE CELLULAR DIALER FROM THE FIRE ALARM PANEL MANUFACTURER. PROVIDE 120V CONNECTIONS TO DIALER (SHARE A CIRCUIT WITH THE FIRE ALARM PANEL) AND INTERCONNECT TO THE FIRE ALARM PANEL PER MANUFACTURER'S REQUIREMENTS.

6 PROVIDE INTERMATIC SW60MWK TIMER SWITCH OR EQUAL.

7 PROVIDE INTERMATIC EI215W TIMER SWITCH OR EQUAL.

8 FLOOR BOX SHALL BE A PASS THROUGH TO FEED RECEPTACLES (POWER AND DATA) IN MILLWORK. USE WIREMOLD RFB4 OR EQUAL (LID TO BE LEFT IN STORAGE ROOM FOR FUTURE USE IF DESIRED BY OWNER). PROVIDE 4 POWER & 2 DATA RECEPTACLES IN MILLWORK IN LOCATION SHOWN ON ARCHITECTURAL DRAWINGS.

bhd ARCHITECTS
www.bhdarchitects.com
Phone 801.571.0010
Fax 801.571.0303
Toll Free 888.571.0010
65 East Wadsworth Park Drive
Suite 205 Draper, Utah 84020

LICENSED PROFESSIONAL ENGINEER
No. 5148728
DAVID G. HINCKLEY
4-8-24
STATE OF UTAH

SPECTRUM ENGINEERS
324 S. State St., Suite 400
Salt Lake City, UT 84111
800-678-7077
801-328-5151
fax: 801-328-5155
www.spectrum-engineers.com

THE CHURCH OF JESUS CHRIST OF LATTER-DAY SAINTS

Tooele UT Deseret Peak Sr Seminary

Approximately 2234 North Benn Boulevard, Tooele, Utah
40.569694, -112.303347

Date: 3 Apr 2024
BHD #: 2326
County Parcel: 02-143-0-0115
Plan Series: Custom 5 CR
Owner #: 501-3450

Sheet Issue and Revision Schedule

#	Date	Description
1	3 Apr 2024	Bid Documents

Power Plan

EP101

4/8/2024 2:02:47 PM

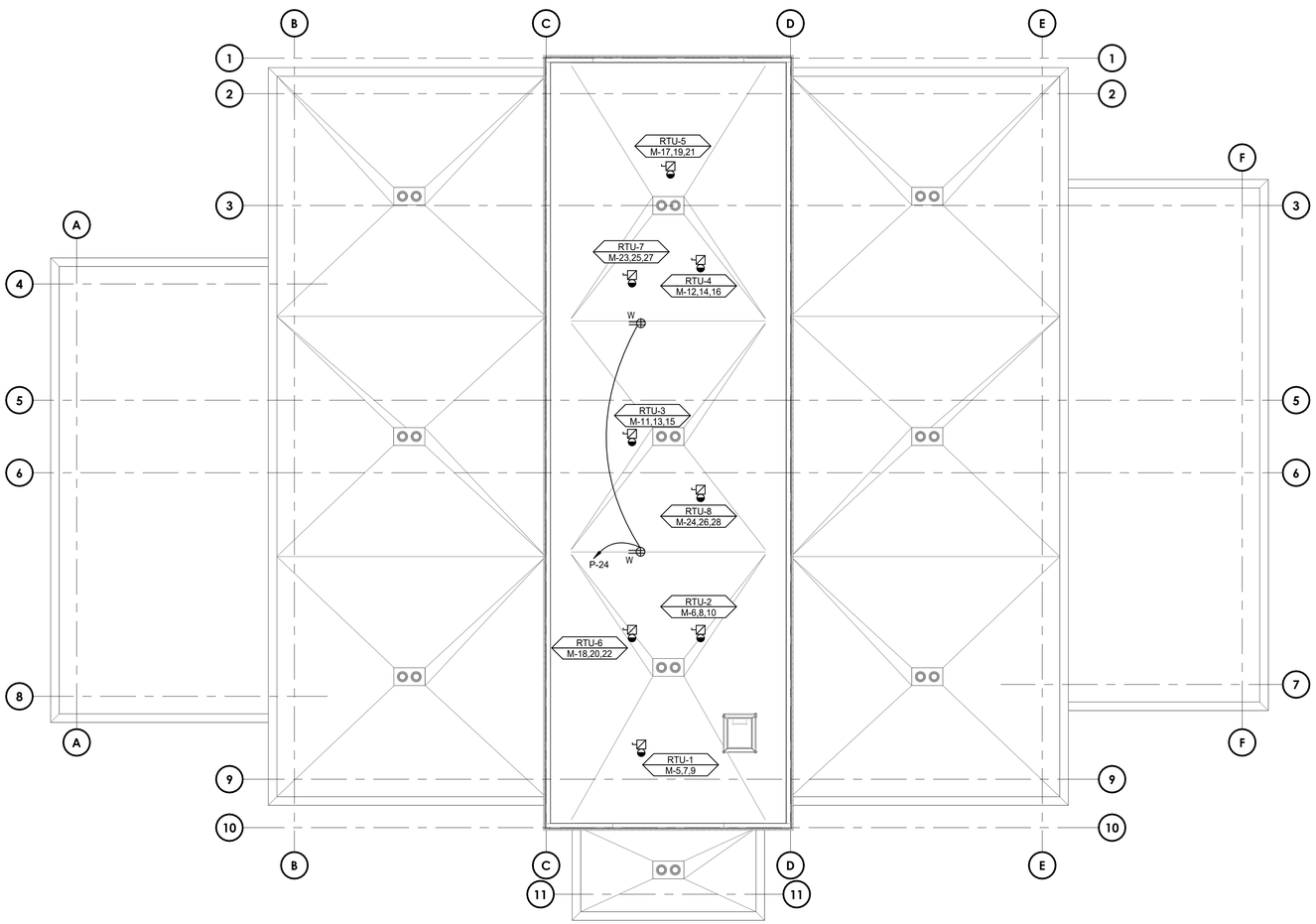

1 Roof Power Plan
SCALE: 1/8" = 1'-0"

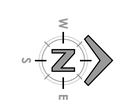

bhd ARCHITECTS
www.bhdarchitects.com
Phone 801.571.0010
Fax 801.571.0303
Toll Free 888.571.0010
65 East Wadsworth Park Drive
Suite 205 Draper, Utah 84020

LICENSED PROFESSIONAL ENGINEER
No. 5148728
DAVID G. HINCKLEY
4-8-24
STATE OF UTAH

SPECTRUM ENGINEERS
324 S. State St., Suite 400
Salt Lake City, UT 84111
800-678-7077
801-328-5151
fax: 801-328-5155
www.spectrum-engineers.com

THE CHURCH OF
JESUS CHRIST
OF LATTER-DAY SAINTS

Tooele UT Deseret Peak Sr Seminary

Approximately 2234 North Berra Boulevard, Tooele, Utah
40.56694, -112.30347

Date: 3 Apr 2024
BHD #: 2326
County Parcel: 02-143-0-0115
Plan Series: Custom 5 CR
Owner #: 501-3450

Sheet Issue and Revision Schedule

#	Date	Description
1	3 Apr 2024	Bid Documents

Roof Power Plan

EP121

BRANCH CIRCUIT CONDUCTOR AND CONDUIT SIZING TABLE

CIRCUIT AMPACITY/VOLTAGE	CIRCUIT LENGTH	CONDUCTOR SIZE (PHASE, NEUTRAL AND GR)	CONDUIT SIZE
20A/120V	0' - 60'	#12 AWG	0.75" Ø
20A/120V	60' - 95'	#10 AWG	0.75" Ø
20A/120V	95' - 150'	#8 AWG	1" Ø
20A/120V	150' - 240'	#6 AWG	1.25" Ø
20A/277V	0' - 140'	#12 AWG	0.75" Ø
20A/277V	140' - 220'	#10 AWG	0.75" Ø
20A/277V	220' - 350'	#8 AWG	1" Ø
20A/277V	350' - 550'	#6 AWG	1.25" Ø

NOTES:

1. WIRE SIZING IS BASED ON COPPER CONDUCTORS SUPPLYING A 20A, 120V CIRCUIT AT THE INDICATED VOLTAGE, ASSUMED TO BE 80% LOADED (16A), WITH MAXIMUM VOLTAGE DROP OF 3% AT THE LOAD.
2. DOWN-SIZED WIRE AT DEVICE/LOAD AS REQUIRED AND TERMINATE CONDUCTORS IN A SAFE AND CODE COMPLIANT MANNER.
3. CONDUIT SIZE IS BASED ON A MAXIMUM OF 3 CIRCUITS PER CONDUIT, EACH WITH A SEPARATE NEUTRAL CONDUCTOR.

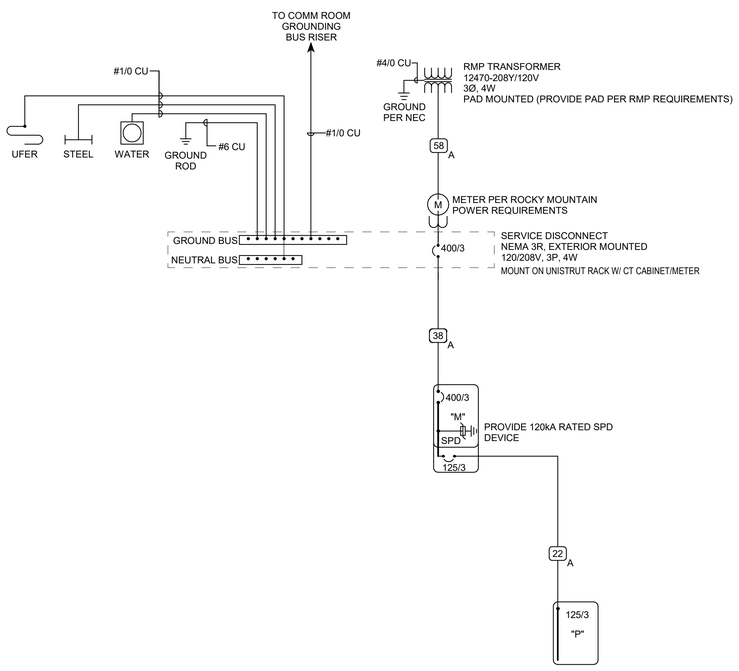

1 One-line Diagram
SCALE: NTS

ALUMINUM CONDUCTOR AND CONDUIT SCHEDULE

SCHEDULE NUMBER
SUBSCRIPT (NOTE 5)
(E.G.) 5 IG

SYM	AMP	CONDUIT SIZE	CONDUCTOR (NOTE 1) QTY	SIZE	G	IG	SE	NOTES
1 A								
2 A								
3 A								
4 A								
5 A								
6 A								
7 A								
8 A								
9 A								
10 A								
11 A								
12 A								
13 A								
14 A								
15 A								
16 A								
17 A								
18 A								
19 A								
20 A								
21 A	130	2	3	2/0	4	1/0	4	2,7
22 A	130	2	4	2/0	4	1/0	4	2,7
23 A	150	2	3	3/0	4	1/0	4	2,7
24 A	150	2	4	3/0	4	1/0	4	2,7
25 A	175	2	3	4/0	4	1/0	2	2,7
26 A	175	2.50	4	4/0	4	1/0	2	2,7
27 A	200	2.50	3	250	4	1/0	2	2,7
28 A	200	3	4	250	4	1/0	2	2,7
29 A	230	2.50	3	300	2	1/0	1/0	2,7
30 A	230	3	4	300	2	1/0	1/0	2,7
31 A	255	3	3	350	2	2/0	1/0	2,7
32 A	255	3	4	350	2	2/0	1/0	2,7
33 A	310	3	3	500	1	3/0	1/0	2,7
34 A	310	4	4	500	1	3/0	1/0	2,7
35 A	380	2 EA 2.50	3	250	1	4/0	3/0	2,7
36 A	380	2 EA 3	4	250	1	4/0	3/0	2,7
37 A	400	2 EA 2.50	3	250	1/0	4/0	3/0	2,7
38 A	400	2 EA 2.50	4	250	1/0	4/0	3/0	2,7
39 A	500	2 EA 3	3	350	1/0	300	3/0	2,4,7
40 A	500	2 EA 3	4	350	1/0	300	3/0	2,4,7
41 A	620	2 EA 3	3	500	3/0	300	3/0	2,4,7
42 A	620	2 EA 4	4	500	3/0	300	3/0	2,4,7
43 A	750	3 EA 3	3	350	3/0	300	4/0	2,4,7
44 A	760	3 EA 3	4	350	3/0	300	4/0	2,4,7
45 A	810	3 EA 3	3	400	4/0	300	250	2,4,7
46 A	810	3 EA 4	4	400	4/0	300	250	2,4,7
47 A	1000	4 EA 3	3	350	4/0	300	250	4,7
48 A	1000	4 EA 3	4	350	4/0	300	250	4,7
49 A	-	-	-	-	-	-	-	-
50 A	1140	4 EA 4	4	500	250	300	250	4,7
51 A	1240	4 EA 4	3	500	350	300	250	4,7
52 A	1240	4 EA 4	4	500	350	300	250	4,7
53 A	1620	6 EA 4	4	400	400	350	250	4,7
54 A	2170	7 EA 4	4	500	400	400	500	4,7
55 A	2695	7 EA 4	4	750	600	750	750	4,7
56 A	3080	8 EA 4	4	750	600	750	750	4,7
57 A	4235	11 EA 4	4	750	800	750	750	4,7
58 A	600	2 EA 4	-	-	-	-	-	6
59 A	3000	10 EA 6	-	-	-	-	-	6
60 A	-	10 EA 4	-	-	-	-	-	6

CONDUCTOR AND CONDUIT SCHEDULE NOTES

1 CONDUCTORS SHOWN ARE SHOWN FOR EACH CONDUIT WITH MODIFICATIONS AS NOTED IN NOTE 5. ALL CONDUCTORS SHOWN ARE THWN UNLESS OTHERWISE NOTED.
2 PROVIDE EQUIPMENT GROUND CONDUCTORS PER TABLE 250-122 WHEN CIRCUIT BREAKERS ARE SIZED GREATER THAN AMPERE RATING SHOWN IN TABLE.
3 PROVIDE #10 NEUTRALS FOR MULTIWIRE BRANCH CIRCUITS SERVING COMPUTERS.
4 GROUND (G) CONDUCTOR MAY BE DELETED ON SERVICE ENTRANCE CONDUCTORS.
5 SYMBOL SUBSCRIPTS:
"2N": INCLUDE TWO NEUTRAL CONDUCTORS SIZED AS SCHEDULED FOR PHASE AND NEUTRAL CONDUCTORS WHERE THE CONDUCTOR IS #1/0 OR LARGER. INCLUDE A SINGLE 200% RATED CONDUCTOR THAT IS TWICE THE AMPACITY OF THE SCHEDULED PHASE AND NEUTRAL CONDUCTOR WHERE THE CONDUCTOR IS BELOW #1/0 IN SIZE.
"CI": PROVIDE CIRCUIT INTEGRITY CABLE; TYPE TWO-HOUR FIRE RESISTIVE CABLES IN CONDUIT OR PROVIDE FEEDER ENCASED IN CONCRETE.
"FG" FULL SIZE GROUND, SIZE EQUIPMENT GROUNDING CONDUCTOR TO BE SAME SIZE AS THE PHASE CONDUCTORS.
"HH": NEUTRAL CURRENTS EXIST DUE TO HIGH HARMONIC "NONLINEAR" LOADS. CURRENT CARRYING CONDUCTORS DERATED ACCORDINGLY. PROVIDE THE IG/HH SIZE FOR THE EQUIPMENT GROUNDING CONDUCTOR.
"IG": INCLUDE IG (INSULATED/ISOLATED GROUND CONDUCTOR) SCHEDULED ALONG WITH THE GROUND OF EQUIPMENT GROUND CONDUCTOR.
"MC": PROVIDE FEEDER IN METAL-CLAD CABLE; TYPE MC IN PLACE OF SINGLE CONDUCTORS IN CONDUIT.
"SE": SUBSTITUTE "SE" CONDUCTOR FOR "G" CONDUCTOR SHOWN, WHICH IS SIZED FOR THE GROUNDING OF THE SECONDARY OF THE SEPARATELY DERIVED SYSTEM.
"SER": PROVIDE SERVICE-ENTRANCE CABLE; TYPE SE OR SER IN PLACE OF SINGLE CONDUCTORS IN CONDUIT.
6 RACEWAY ONLY. CONDUCTORS PROVIDED BY UTILITY.
7 ALUMINUM CONDUCTORS NOT TO BE USED FOR CONNECTION TO MOTORS OR MOTOR DRIVEN EQUIPMENT.

COPPER CONDUCTOR AND CONDUIT SCHEDULE

SCHEDULE NUMBER
SUBSCRIPT (NOTE 5)
(E.G.) 5 IG

SYM	AMP	HH AMPS	CONDUIT SIZE	CONDUCTOR (NOTE 1) QTY	SIZE	G	IG/HH	SE	NOTES
1	20	-	.75	2	12	12	12	8	2
2	20	-	.75	3	12	12	12	8	2,3
3	20	24	.75	4	12	12	12	8	2,3
4	30	-	.75	2	10	10	10	8	2
5	30	-	.75	3	10	10	10	8	2
6	30	32	.75	4	10	10	10	8	2
7	40	-	1	2	8	10	8	6	2
8	40	-	1	3	8	10	8	6	2
9	40	44	1	4	8	10	8	6	2
10	55	-	1	2	6	10	8	4	2
11	55	-	1	3	6	10	8	4	2
12	55	60	1.25	4	6	10	8	4	2
13	70	-	1	2	4	8	4	2	2
14	70	-	1.25	3	4	8	4	2	2
15	70	76	1.25	4	4	8	4	2	2
16	85	-	1.25	2	3	8	3	2	2
17	85	-	1.25	3	3	8	3	2	2
18	85	92	1.25	4	3	8	3	2	2
19	95	-	1.25	3	2	8	2	2	2
20	95	104	1.50	4	2	8	2	2	2
21	130	-	1.50	3	1	6	2	2	2
22	130	116	1.50	4	1	6	2	2	2
23	150	-	2	3	1/0	6	2	1/0	2
24	150	136	2	4	1/0	6	2	1/0	2
25	175	-	2	3	2/0	6	2	2/0	2
26	175	156	2	4	2/0	6	2	2/0	2
27	200	-	2	3	3/0	6	2	2/0	2
28	200	180	2.50	4	3/0	6	2	2/0	2
29	230	-	2.50	3	4/0	4	2	2/0	2
30	230	208	2.50	4	4/0	4	2	2/0	2
31	255	-	2.50	3	250	4	1	2/0	2
32	255	232	2.50	4	250	4	1	2/0	2
33	310	-	3	3	350	3	1/0	3/0	2
34	310	280	3	4	350	3	1/0	3/0	2
35	380	-	3.50	3	500	3	3/0	3/0	2
36	380	344	4	4	500	3	3/0	3/0	2
37	400	-	2 EA 2	3	3/0	3	3/0	3/0	2
38	400	360	2 EA 2.50	4	3/0	3	3/0	3/0	2
39	510	-	2 EA 2.50	3	250	1	4/0	3/0	2
40	510	464	2 EA 3	4	250	1	4/0	3/0	2
41	620	-	2 EA 3	3	350	1/0	4/0	3/0	2,4
42	620	560	2 EA 3	4	350	1/0	4/0	3/0	2,4
43	760	-	2 EA 3.50	3	500	1/0	4/0	3/0	2,4
44	760	688	2 EA 4	4	500	1/0	4/0	3/0	2,4
45	855	-	3 EA 3	3	300	2/0	4/0	3/0	2,4
46	855	768	3 EA 3	4	300	2/0	4/0	3/0	2,4
47	1000	-	3 EA 3.50	3	400	2/0	4/0	3/0	4
48	1000	912	3 EA 3.50	4	400	2/0	4/0	3/0	4
49	1140	-	3 EA 4	3	500	3/0	4/0	3/0	4
50	1140	1032	3 EA 4	4	500	3/0	4/0	3/0	4
51	1240	-	4 EA 3	3	350	3/0	4/0	3/0	4
52	1240	1120	4 EA 3	4	350	3/0	4/0	3/0	4
53	1675	1520	5 EA 4	4	400	4/0	4/0	4/0	4
54	2010	1824	6 EA 4	4	400	250	250	250	4
55	2660	2408	7 EA 4	4	500	350	350	350	4
56	3040	2752	8 EA 4	4	500	500	500	500	4
57	4180	3784	11 EA 4	4	500	500	500	500	4
58	1200	-	5 EA 4	-	-	-	-	-	6
59	3000	-	10 EA 6	-	-	-	-	-	6
60	-	-	10 EA 4	-	-	-	-	-	6

CONDUCTOR AND CONDUIT SCHEDULE NOTES

1. CONDUCTORS SHOWN ARE SHOWN FOR EACH CONDUIT WITH MODIFICATIONS AS NOTED IN NOTE 5. ALL CONDUCTORS SHOWN ARE THWN UNLESS OTHERWISE NOTED.
2. PROVIDE EQUIPMENT GROUND CONDUCTORS PER TABLE 250-122 WHEN CIRCUIT BREAKERS ARE SIZED GREATER THAN AMPERE RATING SHOWN IN TABLE.
3. PROVIDE #10 NEUTRALS FOR MULTIWIRE BRANCH CIRCUITS SERVING COMPUTERS.
4. GROUND (G) CONDUCTOR MAY BE DELETED ON SERVICE ENTRANCE CONDUCTORS.
5. SYMBOL SUBSCRIPTS:
"2N": INCLUDE TWO NEUTRAL CONDUCTORS SIZED AS SCHEDULED FOR PHASE AND NEUTRAL CONDUCTORS WHERE THE CONDUCTOR IS #1/0 OR LARGER. INCLUDE A SINGLE 200% RATED CONDUCTOR THAT IS TWICE THE AMPACITY OF THE SCHEDULED PHASE AND NEUTRAL CONDUCTOR WHERE THE CONDUCTOR IS BELOW #1/0 IN SIZE.
"CI": PROVIDE CIRCUIT INTEGRITY CABLE; TYPE TWO-HOUR FIRE RESISTIVE CABLES IN CONDUIT OR PROVIDE FEEDER ENCASED IN CONCRETE.
"FG" FULL SIZE GROUND, SIZE EQUIPMENT GROUNDING CONDUCTOR TO BE SAME SIZE AS THE PHASE CONDUCTORS.
"HH": NEUTRAL CURRENTS EXIST DUE TO HIGH HARMONIC "NONLINEAR" LOADS. CURRENT CARRYING CONDUCTORS DERATED ACCORDINGLY. PROVIDE THE IG/HH SIZE FOR THE EQUIPMENT GROUNDING CONDUCTOR.
"IG": INCLUDE IG (INSULATED/ISOLATED GROUND CONDUCTOR) SCHEDULED ALONG WITH THE GROUND OF EQUIPMENT GROUND CONDUCTOR.
"MC": PROVIDE FEEDER IN METAL-CLAD CABLE; TYPE MC IN PLACE OF SINGLE CONDUCTORS IN CONDUIT.
"SE": SUBSTITUTE "SE" CONDUCTOR FOR "G" CONDUCTOR SHOWN, WHICH IS SIZED FOR THE GROUNDING OF THE SECONDARY OF THE SEPARATELY DERIVED SYSTEM.
"SER": PROVIDE SERVICE-ENTRANCE CABLE; TYPE SE OR SER IN PLACE OF SINGLE CONDUCTORS IN CONDUIT.
6. RACEWAY ONLY. CONDUCTORS PROVIDED BY UTILITY.

GENERAL SHEET NOTES

1 PROVIDE NEMA 3R ENCLOSURES FOR EQUIPMENT LOCATED OUTDOORS. REFER TO PLANS FOR EQUIPMENT LOCATIONS.

2 REFER TO PLANS FOR CONSTRAINTS ON PHYSICAL DIMENSIONS AND CLEARANCE REQUIREMENTS OF EQUIPMENT. PROVIDE EQUIPMENT DIMENSIONS THAT FALL WITHIN THE CONSTRAINTS OF EACH SPECIFIC LOCATION.

3 ALL EQUIPMENT SHALL BE CONSTRUCTED AND BRACED FOR THE SEISMIC CONDITIONS OF THE PROJECT. REFER TO ELECTRICAL SPECIFICATIONS FOR REQUIREMENTS.

4 PROVIDE PERFORMANCE TESTING FOR GROUND-FAULT PROTECTION SYSTEMS ON SITE WITH A WRITTEN RECORD OF THIS TEST SUBMITTED TO THE AUTHORITY HAVING JURISDICTION PER NEC 230.95(C).

bhd ARCHITECTS
www.bhdarchitects.com
Phone 801.571.0010
Fax 801.571.0303
Toll Free 888.571.0010
65 East Wadsworth Park Drive
Suite 205 Draper, Utah 84020

LICENSED PROFESSIONAL ENGINEER
No. 5148728
DAVID G. HINCKLEY
4-8-24
STATE OF UTAH

SPECTRUM ENGINEERS
324 S. State St., Suite 400
Salt Lake City, UT 84111
800-678-7077
801-328-5151
fax: 801-328-5155
www.spectrum-engineers.com

THE CHURCH OF JESUS CHRIST OF LATTER-DAY SAINTS

Tooele UT Deseret Peak Sr Seminary

Approximately: 2234 North Berra Boulevard, Tooele, Utah
40.569694, -112.303347

Date: 3 Apr 2024
BHD #: 2326
County Parcel: 02-143-0-0115
Plan Series: Custom 5 CR
Owner #: 501-3450

Sheet Issue and Revision Schedule

#	Date	Description
1	3 Apr 2024	Bid Documents

One-line Diagram

EP601

4/8/2024 2:09:15 PM

EQUIPMENT SCHEDULE

EQUIPMENT SCHEDULE KEY
E - DIVISION 26
Q - FURNISHED WITH EQUIPMENT
* - COORDINATE WITH THE DIVISION 23 TEMPERATURE CONTROL INSTALLER
** - AUTOMATIC CONTROL WIRING BY DIVISION 23

NOTES:
1. NEMA 3R
2. TOGGLE SWITCH W/ THERMAL OVERLOAD.
3. PROVIDE FUSED DISCONNECT ELEVATOR POWER MODULE WITH SHUNT TRIP.
4. CONTRACTOR TO PERFORM FINAL CONNECTION TO LINE VOLTAGE THERMOSTATS.
5. TOGGLE SWITCH W/BACNET INTERFACE.
6. INDOOR UNITS FED FROM OUTDOOR UNIT. PROVIDE DISCONNECTS FOR BOTH.
7. PROVIDE SWITCH WITH BACNET MS/TP CAPABILITY.
8. PROVIDE LABEL ON DISCONNECT "DISCONNECT OUTDOOR UNIT PRIOR TO INDOOR."
9. LINE VOLTAGE THERMOSTAT ON WALL.
10. PROVIDE EXPLOSION PROOF DEVICES AND WIRING METHODS.
11. PROVIDE DUAL-REDUNDANT 100% RATED VFD'S FOR AIR HANDLER.
12. PROVIDE MANUAL STARTER WITH THERMAL OVERLOAD AND RELAY FOR ATC/BAS CONTROL.

GENERAL NOTES:
1. WHERE DISCONNECTS, STARTERS, OR VFCs ARE BEING PROVIDED BY ELECTRICAL CONTRACTOR, LOCATE EQUIPMENT IN ACCESSIBLE LOCATION, SUCH THAT IT IS WITHIN SITE OF THE MECHANICAL EQUIPMENT IT IS SERVING, AND COMPLIES WITH N.E.C. REQUIRED CLEARANCES.

			LOAD DATA								OVERCURRENT PROTECTION			DISCONNECT			STARTER									
MARK	QTY	ITEM DESCRIPTION	HP	kW	MCA	FLA	VOLT	PH	Hz	WIRE AND CONDUIT SIZE	FURN BY	DEVICE	LOCATION	FURN BY	DEVICE	LOCATION	FURN BY	DEVICE	SIZES	SELECTOR SWITCH	PILOT LAMP	NORMALLY OPEN CONTACT	NORMALLY CLOSED CONTACT	PHASE FAILURE RELAY	NOTES	MARK
EF	7	EXHAUST FAN		-	-	0.1	120	1	60	2 #12, 12 GR 0.75" CND	E	20/1 CB	P	E	TOGGLE SWITCH	P	Q	-	-	-	-	-	-	-		EF
EF-4	1	EXHAUST FAN		-	-	0.1	120	1	60	2 #12, 12 GR 0.75" CND	E	20/1 CB	M	E	TOGGLE SWITCH	M	Q	-	-	-	-	-	-	-		EF-4
EH-1	1	ELECTRIC HEATER		-	-	10.6	208	1	60	2 #12, 12 GR 0.75" CND	E	20/2 CB	M	E	30A/2P NF	M	Q	-	-	-	-	-	-	-		EH-1
RTU-1	1	ROOF TOP UNIT		-	-	26	208	3	60	3 #8, 10 GR 1" CND	E	40/3 CB	M	E	60A/3P FRN-40	M	Q	-	-	-	-	-	-	-		RTU-1
RTU-2	1	ROOF TOP UNIT		-	-	28	208	3	60	3 #8, 10 GR 1" CND	E	40/3 CB	M	E	60A/3P FRN-40	M	Q	-	-	-	-	-	-	-		RTU-2
RTU-3	1	ROOF TOP UNIT		-	-	26	208	3	60	3 #8, 10 GR 1" CND	E	40/3 CB	M	E	60A/3P FRN-40	M	Q	-	-	-	-	-	-	-		RTU-3
RTU-4	1	ROOF TOP UNIT		-	-	26	208	3	60	3 #8, 10 GR 1" CND	E	40/3 CB	M	E	60A/3P FRN-40	M	Q	-	-	-	-	-	-	-		RTU-4
RTU-5	1	ROOF TOP UNIT		-	-	33	208	3	60	3 #8, 10 GR 1" CND	E	50/3 CB	M	E	60A/3P FRN-40	M	Q	-	-	-	-	-	-	-		RTU-5
RTU-6	1	ROOF TOP UNIT		-	-	26	208	3	60	3 #8, 10 GR 1" CND	E	40/3 CB	M	E	60A/3P FRN-40	M	Q	-	-	-	-	-	-	-		RTU-6
RTU-7	1	ROOF TOP UNIT		-	-	33	208	3	60	3 #8, 10 GR 1" CND	E	50/3 CB	M	E	60A/3P FRN-40	M	Q	-	-	-	-	-	-	-		RTU-7
RTU-8	1	ROOF TOP UNIT		-	-	26	208	3	60	3 #8, 10 GR 1" CND	E	40/3 CB	M	E	60A/3P FRN-40	M	Q	-	-	-	-	-	-	-		RTU-8
SD-1	1	SKYFOLD DOOR	1.5	-	-	10	208	1	60	2 #12, 12 GR 0.75" CND	E	20/2 CB	M	E	TOGGLE SWITCH	M	Q	-	-	-	-	-	-	-		SD-1
WH-1	1	WATER HEATER		-	-	0.1	120	1	60	2 #12, 12 GR 0.75" CND	E	20/1 CB	M	E	TOGGLE SWITCH	M	Q	-	-	-	-	-	-	-		WH-1

PANEL: "M"

VOLTS/PHASE/WIRE:	PANEL SIZE & TYPE:	MAIN SIZE AND TYPE:	FED FROM:	CABINET:	LOCATION:	NOTES:
120/208V, 3 PH 4 WIRE	22" W x 6" D, BOLT-ON	400 AMPERE MAIN CB		SURFACE	Technology/ Roof Access 103	

ACCESSORIES: PANEL DIRECTORY, IDENTIFICATION, GROUNDING BAR **AIC RATING:** 22,000

OCP				LOAD (kVA)				PHASE LOAD							LOAD (kVA)			OCP			CKT
CKT NO	AMP	POLE	BKR	LTG	PWR	CO	DESCRIPTION	A		B		C		DESCRIPTION	CO	PWR	LTG	BKR	POLE	AMP	NO
1	20	2		0.0	2.1	0.0	SKYFOLD DOOR	1.0	0.0					GONG	0.0	0.0	0.0		1	20	2
3	--	--	--	--	--	--	--			1.0	0.4			ADA PUSH PLATES	0.0	0.4	0.0		1	20	4
5	40	3		0.0	9.4	0.0	RTU-1					3.1	3.4	RTU-2	0.0	10.1	0.0		3	50	6
7	--	--	--	--	--	--	--	3.1	3.4					--	--	--	--	--	--	--	8
9	--	--	--	--	--	--	--			3.1	3.4			--	--	--	--	--	--	--	10
11	40	3		0.0	9.4	0.0	RTU-3					3.1	3.1	RTU-4	0.0	9.4	0.0		3	40	12
13	--	--	--	--	--	--	--	3.1	3.1					--	--	--	--	--	--	--	14
15	--	--	--	--	--	--	--			3.1	3.1			--	--	--	--	--	--	--	16
17	50	3		0.0	11.9	0.0	RTU-5					4.0	3.1	RTU-6	0.0	9.4	0.0		3	40	18
19	--	--	--	--	--	--	--	4.0	3.1					--	--	--	--	--	--	--	20
21	--	--	--	--	--	--	--			4.0	3.1			--	--	--	--	--	--	--	22
23	50	3		0.0	11.9	0.0	RTU-7					4.0	3.1	RTU-8	0.0	9.4	0.0		3	40	24
25	--	--	--	--	--	--	--	4.0	3.1					--	--	--	--	--	--	--	26
27	--	--	--	--	--	--	--			4.0	3.1			--	--	--	--	--	--	--	28
29	20	1		0.0	0.0	0.2	EF-4/WH-1/CIRC PUMP					0.2	1.7	WATER HEATER	0.0	1.7	0.0		1	20	30
31	20	2		0.0	2.2	0.0	EH-1	1.1	0.2					IRRIGATION CONTROLLER	0.0	0.2	0.0		1	20	32
33	--	--	--	--	--	--	--			1.1	0.0			SPARE	0.0	0.0	0.0	--	1	20	34
35	20	1	--	0.0	0.0	0.0	SPARE					0.0	0.0	SPARE	0.0	0.0	0.0	--	1	20	36
37	20	1	--	0.0	0.0	0.0	SPARE	0.0	--					SPACE	0.0	0.0	0.0	--	1	--	38
39	20	1	--	0.0	0.0	0.0	SPARE			0.0	--			SPACE	0.0	0.0	0.0	--	1	--	40
41	20	1	--	0.0	0.0	0.0	SPARE					0.0	--	SPACE	0.0	0.0	0.0	--	1	--	42

TOTALS:	A	B	C
CONNECTED kVA PER PHASE	29	29	29
CONNECTED AMPS PER PHASE	244	246	239

CONNECTED TOTAL kVA = **87**
AVERAGE CONNECTED AMPS PER PHASE = **243**

NEC DIVERSIFIED LOAD CALCULATIONS

LIGHTING & CONTINUOUS LOADS:
RECEPTACLES: **0.2 kVA @ 100% = 0.2 kVA**
ALL OTHER LOADS @ 100% : **90.2 kVA**

- 100% CONNECTED LOAD PLUS 25%
- FIRST 10kVA @ 100%, REMAINDER @ 50%
- MOTOR TOTALS INCLUDED IN ALL OTHER LOADS WITH LARGEST MOTOR CALCULATED @ 125% PER NEC

DIVERSIFIED TOTAL kVA = **90**
AVERAGE AMPS PER PHASE = **251**

BKR: GF=GFCI, GF3=30mA GFCI CAPABLE OF BEING LOCKED OUT IN OPEN POSITION, IG=ISOLATED GROUND, AF=AFCI, ST=SHUNT TRIP, RED=PROVIDE RED COLORED BREAKER, AF=ARC FAULT CURRENT INTERRUPTER, GA=COMBINATION OF GROUND FAULT AND ARC FAULT CIRCUIT INTERRUPTER, GS=COMBINATION OF SHUNT TRIP WITH GFCI

PANEL: "P"

VOLTS/PHASE/WIRE:	PANEL SIZE & TYPE:	MAIN SIZE AND TYPE:	FED FROM:	CABINET:	LOCATION:	NOTES:
120/208V, 3 PH 4 WIRE	22" W x 6" D, BOLT-ON	125 AMPERE MAIN LUGS		SURFACE	Technology/ Roof Access 103	

ACCESSORIES: PANEL DIRECTORY, IDENTIFICATION, GROUNDING BAR **AIC RATING:** 22,000

OCP				LOAD (kVA)				PHASE LOAD							LOAD (kVA)			OCP			CKT
CKT NO	AMP	POLE	BKR	LTG	PWR	CO	DESCRIPTION	A		B		C		DESCRIPTION	CO	PWR	LTG	BKR	POLE	AMP	NO
1	20	1	GF	0.0	0.7	0.0	DRINKING FOUNTAIN HALLWAY...	0.7	1.1					CO OFFICE 110, 109	1.1	0.0	0.0		1	20	2
3	20	1		0.0	0.0	1.3	CO FOYER/HALL/STOR/CUST/EXT			1.3	0.5			CO OFFICE 108	0.5	0.0	0.0		1	20	4
5	20	1		0.0	0.0	1.3	CO CLASSROOM 114					1.3	1.4	CO CLASSROOM 105	1.4	0.0	0.0		1	20	6
7	20	1		0.0	0.0	1.1	CO CLASSROOM 113	1.1	1.3					CO HALL/FOYER	1.3	0.0	0.0		1	20	8
9	20	1		0.0	0.0	1.4	CO CLASSROOM 112			1.4	0.4			CO/FB2 FOYER 104	0.4	0.0	0.0		1	20	10
11	20	1		0.0	0.0	0.7	CO PRINCIPAL 111					0.7	0.4	CO TECHNOLOGY/ ROOF ACCESS...	0.4	0.0	0.0		1	20	12
13	20	1		0.0	0.8	0.2	REF/COUNTER CO COLLAB 107	1.0	0.4					CO TECHNOLOGY/ ROOF ACCESS...	0.4	0.0	0.0		1	20	14
15	20	1		0.0	0.8	0.2	DISP/COUNTER CO COLLAB 107			1.0	0.9			FACP/EVAC	0.0	0.9	0.0		1	20	16
17	20	1		0.0	0.0	0.4	COUNTER CO COLLAB 107					0.4	1.4	CO CLASSROOM 125	1.4	0.0	0.0		1	20	18
19	20	1		0.0	0.0	1.1	EF/CO COLLAB 107	1.1	0.7					CO RESTROOM 120, 123, 121, 122	0.7	0.0	0.0		1	20	20
21	20	1		0.0	0.0	1.3	CO COPIER COLLAB 107			1.3	0.9			CO RESTROOM 119, 124, HALL...	0.9	0.0	0.0		1	20	22
23	20	1		0.0	0.0	0.4	FB2 COLLAB 107					0.4	0.4	CO ROOF	0.4	0.0	0.0		1	20	24
25	20	1		0.9	0.0	0.0	LTG CUST/SOTR/CLASS 114	0.9	0.7					CO TRELLIS	0.7	0.0	0.0		1	20	26
27	20	1		1.0	0.0	0.0	LTG HALL 115, 118			1.0	2.0			LTG FOYER 104	0.0	0.0	2.0		1	20	28
29	20	1		1.2	0.0	0.0	LTG CLASS 113, 112					1.2	1.4	LTG FIRE RISER/TECH/CLASS 125	0.0	0.1	1.4		1	20	30
31	20	1		0.0	0.5	0.0	KINDOO PANEL	0.5	1.3					LTG EXTERIOR (1R-1)	0.0	0.0	1.3		1	20	32
33	20	1	--	0.0	0.0	0.0	SPARE			0.0	0.1			LTG TRELLIS (1R-2)	0.0	0.0	0.1		1	20	34
35	20	1	--	0.0	0.0	0.0	SPARE					0.0	1.4	LTG COLLAB, OFFICE, CLASS 105	0.0	0.0	1.4		1	20	36
37	20	1	--	0.0	0.0	0.0	SPARE	0.0	--					SPACE	0.0	0.0	0.0	--	1	--	38
39	20	1	--	0.0	0.0	0.0	SPARE			0.0	--			SPACE	0.0	0.0	0.0	--	1	--	40
41	20	1	--	0.0	0.0	0.0	SPARE					0.0	--	SPACE	0.0	0.0	0.0	--	1	--	42

TOTALS:	A	B	C
CONNECTED kVA PER PHASE	11	11	10
CONNECTED AMPS PER PHASE	89	90	86

CONNECTED TOTAL kVA = **30**
AVERAGE CONNECTED AMPS PER PHASE = **84**

NEC DIVERSIFIED LOAD CALCULATIONS

LIGHTING & CONTINUOUS LOADS: **9.1 kVA @ 125% = 11.4 kVA**
RECEPTACLES: **18.8 kVA @ 77% = 14.4 kVA**
ALL OTHER LOADS @ 100% : **2.6 kVA**

- 100% CONNECTED LOAD PLUS 25%
- FIRST 10kVA @ 100%, REMAINDER @ 50%
- MOTOR TOTALS INCLUDED IN ALL OTHER LOADS WITH LARGEST MOTOR CALCULATED @ 125% PER NEC

DIVERSIFIED TOTAL kVA = **28**
AVERAGE AMPS PER PHASE = **79**

BKR: GF=GFCI, GF3=30mA GFCI CAPABLE OF BEING LOCKED OUT IN OPEN POSITION, IG=ISOLATED GROUND, AF=AFCI, ST=SHUNT TRIP, RED=PROVIDE RED COLORED BREAKER, AF=ARC FAULT CURRENT INTERRUPTER, GA=COMBINATION OF GROUND FAULT AND ARC FAULT CIRCUIT INTERRUPTER, GS=COMBINATION OF SHUNT TRIP WITH GFCI

LIGHTING RELAY PANEL "1R"

LOCATION: Technology/ Roof Access 103 **MOUNTING: SURFACE** **ENCLOSUR...** NEMA 1

RELAY	DIMMING	PANEL CIRCUIT	DESCRIPTION	CONTROL CHANNEL	LOAD (WATTS)						CONTROL CHANNEL	DESCRIPTION	PANEL CIRCUIT	DIMMING	RELAY
1		**P-32**	LTG EXTERIOR		1288	56						LTG TRELLIS	**P-34**		2
3															4

FLOORBOX SCHEDULE

ABBREVIATIONS

COMPARTMENT GANG
- - NOT APPLICABLE
A/V - A/V CONNECTIONS, REFER TO A/V DRAWINGS/SPECIFICATIONS
D - DATA RECEPTACLE
DR - DUPLEX RECEPTACLE
QR - QUADRAPLEX RECEPTACLE

RATINGS

USE

FINISH

CONNECTION

COVER

NOTES:
1 PROVIDE ALL REQUIRED HARDWARE FOR COMPLETE INSTALLATION.
2 INCLUDE SEPARATION BARRIER BETWEEN SYSTEMS AND POWER.

		DIMENSIONS			COMPARTMENTS															
ID	DESCRIPTION	LENGTH	WIDTH	DEPTH	GANG 1	GANG 2	GANG 3	GANG 4	GANG 5	GANG 6	RATINGS	USE	CONNECTION	COVER	FINISH	MANUFACTURER 1	PART #	MANUFACTURER 2	PART #	NOTES
FB2	2 GANG POWER FLOORBOX	13"	7"	4"	DR	D	-	-	-	-	2H	CF	C1	CV1	AL	WIREMOLD	RFB4	HUBBEL	-	

bhd ARCHITECTS
www.bhdarchitects.com
Phone 801.571.0010
Fax 801.571.0303
Toll Free 888.571.0010
65 East Wadsworth Park Drive
Suite 205 Draper, Utah 84020

LICENSED PROFESSIONAL ENGINEER No. 5148728 DAVID G. HINCKLEY 4-8-24 STATE OF UTAH

SPECTRUM ENGINEERS
324 S. State St., Suite 400
Salt Lake City, UT 84111
800-678-7077
801-328-5151
fax: 801-328-5155
www.spectrum-engineers.com

THE CHURCH OF JESUS CHRIST OF LATTER-DAY SAINTS

Tooele UT Deseret Peak Sr Seminary

Approximately 2234 North Benn Boulevard, Tooele, Utah
40.569494, -112.303347

Date: 3 Apr 2024 **BHD #:** 2326 **County Parcel:** 02-143-0-0115 **Plan Series:** Custom 5 CR **Owner #:** 501-3450

Sheet Issue and Revision Schedule

#	Date	Description
1	3 Apr 2024	Bid Documents

Schedules

EP602

4/8/2024 10:30:12 PM

4/8/2024 2:03:32 PM

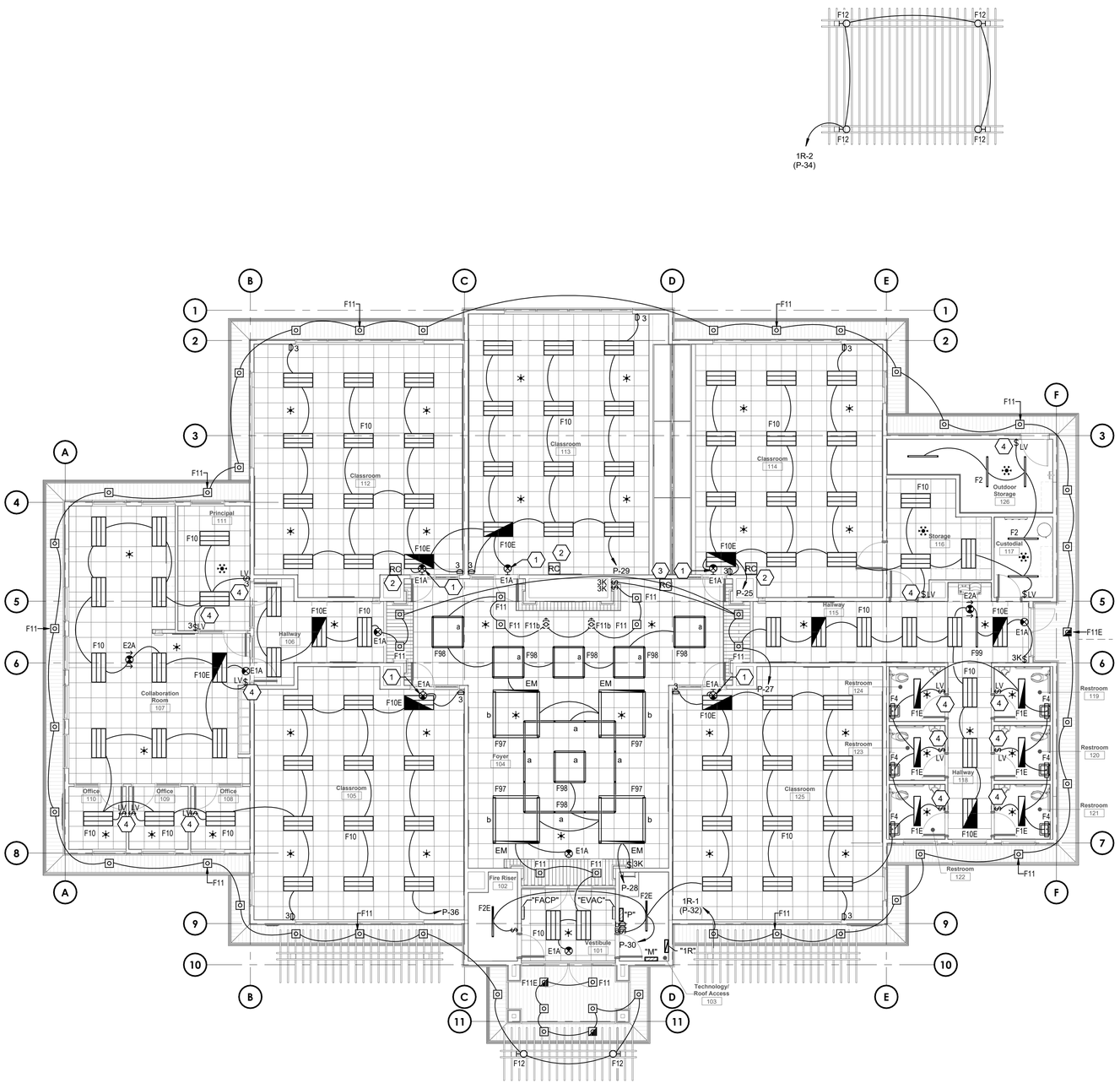

1 Lighting Plan
SCALE: 1/8" = 1'-0"

0 4' 8' 16'

GENERAL SHEET NOTES

1 ALL CEILING MOUNTED EXIT SIGNS SHALL BE RECESSED.

SHEET KEYNOTES

1 MOUNT AT + 11' AFF.

2 PROVIDE 1 ZONE ROOM CONTROLLER. OCCUPANCY SENSORS SHALL TIE INTO ROOM CONTROLLER AND SHUT OFF LIGHTING WITHIN 20 MINUTES IF THERE IS NO OCCUPANCY IN ROOM. THE 2 DIMMER SWITCHES SHOWN IN THE ROOM SHALL TIE INTO THE ROOM CONTROLLER TO DIM LIGHTING IN THE ROOM.

3 PROVIDE 2 ZONE ROOM CONTROLLER. OCCUPANCY SENSORS SHALL TIE INTO ROOM CONTROLLER AND SHUT OFF LIGHTING WITHIN 20 MINUTES IF THERE IS NO OCCUPANCY IN ROOM. THE 2 DIMMER SWITCHES SHALL TIE INTO THE ROOM CONTROLLER AND DIM THE 2 ZONES OF LIGHTING. THE 2 LOW VOLTAGE KEYED SWITCHES AT THE ENTRY SHALL TURN LIGHTING ON/OFF.

4 PROVIDE PUSH BUTTON ON/OFF SWITCH FOR LOW VOLTAGE SWITCH (HUBBELL DSM30W1 OR EQUAL).

bhd ARCHITECTS
www.bhdarchitects.com
Phone 801.571.0010
Fax 801.571.0303
Toll Free 888.571.0010
65 East Wadsworth Park Drive
Suite 205 Draper, Utah 84020

LICENSED PROFESSIONAL ENGINEER
No. 5148728
DAVID G. HINCKLEY
4-8-24
STATE OF UTAH

SPECTRUM ENGINEERS
324 S. State St., Suite 400
Salt Lake City, UT 84111
800-678-7077
801-328-5151
fax: 801-328-5155
www.spectrum-engineers.com

THE CHURCH OF JESUS CHRIST OF LATTER-DAY SAINTS

Tooele UT Deseret Peak Sr Seminary

Approximately 223d North Berra Boulevard, Tooele, Utah
40.536984, -112.263247

Date: 3 Apr 2024
BHD #: 2326
County Parcel: 02-143-0-0115
Plan Series: Custom 5 CR
Owner #: 501-3450

Sheet Issue and Revision Schedule

#	Date	Description
1	3 Apr 2024	Bid Documents

Lighting Plan

EL151

EXTERIOR LIGHTING FIXTURE SCHEDULE

GENERAL NOTES

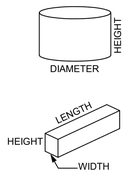

1. SUBSTITUTIONS AND/OR EQUAL FIXTURES MUST RECEIVE APPROVAL PRIOR TO BIDDING, THEY MUST BE SUBMITTED TO THE ENGINEER NO LESS THAN 2 WEEKS PRIOR TO BID OPENING.
2. SAMPLES MUST BE PROVIDED FOR ANY AND ALL FIXTURES UPON A/E REQUEST PRIOR TO RELEASING FIXTURES.
3. ALL FIXTURES SHALL BE LISTED AND APPROVED FOR THEIR INTENDED USE AND LOCATION.
4. VERIFY THE PROPER MOUNTING KITS OR ACCESSORIES TO FACILITATE INSTALLATION AS SHOWN AT EACH LOCATION ON THE DRAWINGS.
5. COMPLY WITH THE "INTERIOR LIGHTING" SECTION OF THE SPECIFICATIONS.
6. ALL LIGHT FIXTURES TO BE EITHER "DLC" OR "LIGHTING FACTS" LISTED OR TO BE APPROVED BY ARCHITECT/ENGINEER AND OWNER.
7. CONTRACTOR ALLOWANCE PRICES ARE ACCURATE WHEN THIS JOB WAS SPECIFIED, CONTRACTOR AND ELECTRICAL DISTRIBUTOR SHALL VERIFY THIS ALLOWANCE AND REPORT ANY PROBLEMS TO THE ENGINEER BEFORE THE BID. ALLOWANCE PRICE MAY OR MAY NOT INCLUDE LAMP(S) OR FREIGHT AS NOTED, AND DO NOT INCLUDE ANY TAXES.

ID	DESCRIPTION	LUMINAIRE		DRIVER		MANUFACTURER
		LUMENS	COLOR TEMP	VOLTAGE	WATTS	
F11	DESCRIPTION: 6" SQUARE DOWNLIGHT, PROVIDE BLACK FLANGE. MOUNTING: RECESSED, CEILING FINISH: BLACK FLANGE OPTICS: 35° BEAM, CLEAR REFLECTOR, MATTE DIFFUSE OPTIONS: EM: NONE	2,000	4000K	120/277V	20	LITHONIA LDN6SQ-40-20-LS6-AR-LD-MVOLT-GZ10 HALO PRS6-FS12-D010 PRESCOLITE LTR-6SQD-H-ML-DM1-LTR-6SQD-T-SL-35-8-MD-SS
F11E	DESCRIPTION: 6" SQUARE DOWNLIGHT, PROVIDE BLACK FLANGE. MOUNTING: RECESSED, CEILING FINISH: BLACK FLANGE OPTICS: 35° BEAM, CLEAR REFLECTOR, MATTE DIFFUSE OPTIONS: EM: EMERGENCY BATTERY	2,000	4000K	120/277V	20	LITHONIA LDN6SQ-35-20-LS6-AR-LD-MVOLT-GZ10 EL HALO PRS6-FS12-D010 EM PRESCOLITE LTR-6SQD-H-ML-DM1-LTR-6SQD-T-SL-35-8-MD-SS EM
F12	DESCRIPTION: RECTANGULAR EXTERIOR, BLACK MOUNTING: WALL FINISH: SCBA OPTICS: CLEAR REFLECTOR, MATTE DIFFUSE, MEDIUM DISTRIBUTION OPTIONS: EM: NONE	1,500	4000K	120/277V	14	LIGMAN FS-UGI-31631-2x6W-xx-xx-xx-SCBA-8" EXTENDED ARM-M-T3-W30-120/277v-02
ZX4	DESCRIPTION: SHOE-BOX STYLE, CUTOFF SINGLE HEAD MOUNTING: 18' POLE FINISH: SCBA OPTICS: TYPE III DISTRIBUTION OPTIONS: - WIND RATING: - EM: NONE	10,000	4000K	120/277V	80	LITHONIA RSX1 LED P2 40K R3 MVOLT SPA

FOR LIGHT POLE BASE DETAIL, SEE ARCHITECTURAL SITE DETAILS.

INTERIOR LIGHTING FIXTURE SCHEDULE

GENERAL NOTES

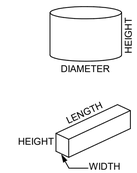

1. SUBSTITUTIONS AND/OR EQUAL FIXTURES MUST RECEIVE APPROVAL PRIOR TO BIDDING, THEY MUST BE SUBMITTED TO THE ENGINEER NO LESS THAN 2 WEEKS PRIOR TO BID OPENING.
2. SAMPLES MUST BE PROVIDED FOR ANY AND ALL FIXTURES UPON A/E REQUEST PRIOR TO RELEASING FIXTURES.
3. ALL FIXTURES SHALL BE LISTED AND APPROVED FOR THEIR INTENDED USE AND LOCATION.
4. VERIFY THE PROPER MOUNTING KITS OR ACCESSORIES TO FACILITATE INSTALLATION AS SHOWN AT EACH LOCATION ON THE DRAWINGS.
5. COMPLY WITH THE "INTERIOR LIGHTING" SECTION OF THE SPECIFICATIONS.
6. ALL LIGHT FIXTURES TO BE EITHER "DLC" OR "LIGHTING FACTS" LISTED OR TO BE APPROVED BY ARCHITECT/ENGINEER AND OWNER.
7. CONTRACTOR ALLOWANCE PRICES ARE ACCURATE WHEN THIS JOB WAS SPECIFIED, CONTRACTOR AND ELECTRICAL DISTRIBUTOR SHALL VERIFY THIS ALLOWANCE AND REPORT ANY PROBLEMS TO THE ENGINEER BEFORE THE BID. ALLOWANCE PRICE MAY OR MAY NOT INCLUDE LAMP(S) OR FREIGHT AS NOTED, AND DO NOT INCLUDE ANY TAXES.

ID	DESCRIPTION	LUMINAIRE		DRIVER			MANUFACTURER (CATALOG SERIES)
		DELIVERED DIRECT LUMENS	COLOR TEMP	TYPE	VOLTAGE	WATTS	
E1A	DESCRIPTION: EXIT SIGN, EDGE LIT, SINGLE SIDED MOUNTING: CEILING, WALL FINISH: SCBA OPTICS: OPTIONS: EM: BATTERY		GREEN	LED	120/277V	5	ISOLITE (UEL) EVENLITE (SOV) EMERGENSEE (SEEXLRN)
E2A	DESCRIPTION: EXIT SIGN, EDGE LIT, DOUBLE SIDED MOUNTING: CEILING, WALL FINISH: SCBA OPTICS: OPTIONS: EM: BATTERY		GREEN	LED	120/277V	5	ISOLITE (UEL) EVENLITE (SOV) EMERGENSEE (SEEXLRN)
F1E	DESCRIPTION: 1'x4' SURFACE MOUNTED LED PANEL. PROVIDE SURFACE KIT. MOUNTING: FINISH: SCBA OPTICS: OPTIONS: EM: EMERGENCY BATTERY	4,000	3500K	LED	120/277V	40	TGS 88-14-WS-C-T-F-SK-90CRI-ELIS10CDF (CAN BE REMOTED IN ACCESSIBLE LOCATION)
F2	DESCRIPTION: LINEAR STRIP, DAMP LISTED MOUNTING: CEILING, PENDANT, WALL FINISH: SCBA OPTICS: DROP LENS OPTIONS: EM: NONE	5,000	3500K	LED (0-10V DIMMING)	120/277V	20	LSI (SDL4-LED-50L-FL-UNV-DIM1-35-80CRI) METALUX (4SNLED LD5 50SL LW UNV L835 CD1 U) DAYBRITE (FSS430L835-UNV-DIM) DECO (DACH-LED-4-23-40-UNV-R-DM-O/5011003) LITHONIA (CDS L48 MVOLT DM 35K 80CRI WH) SYLVANIA (STRIP1A/032UNVD835/48S/WH)
F2E	DESCRIPTION: LINEAR STRIP, DAMP LISTED MOUNTING: CEILING, PENDANT, WALL FINISH: SCBA OPTICS: DROP LENS OPTIONS: EM: EMERGENCY BATTERY	5,000	3500K	LED (0-10V DIMMING)	120/277V	50	LSI (SDL4-LED-50L-FL-UNV-DIM1-35-80CRI) EM METALUX (4SNLED LD5 50SL LW UNV L835 CD1 U) EM DAYBRITE (FSS430L835-UNV-DIM) EM DECO (DACH-LED-4-23-40-UNV-R-DM-O/5011003) EM LITHONIA (CDS L48 MVOLT DM 35K 80CRI WH) EM SYLVANIA (STRIP1A/032UNVD835/48S/WH) EM
F4	DESCRIPTION: 2' LED WALL BRACKET WITH FROSTED SEALED LENS. MOUNTING: WALL FINISH: SCBA OPTICS: OPTIONS: EM:	2,000	3500K	LED	120/277V	20	LIGHTWAY (VTEV-24-LED-U-18W-4-WSA-DIM) XTRALIGHT (SAS-2-2500-40K-DIM-SQ-WH) LA LIGHTING (BSQ100-3-2L-FPA-1DRDM-UNV-1/840) METALUX (4BCLED-LD4-20SL-F-UNV-L840-CD1-U) LITHONIA (FMVTRL 24IN MVOLT 40K 90CRI BN)
F10	DESCRIPTION: 2'x4' FIXTURE FLAT PANEL. MOUNTING: GRID CEILING FINISH: SCBA OPTICS: OPTIONS: EM: NONE	4,800	3500K	LED (0-10V DIMMING) 1%	120/277V	50	METALUX (24FP4735C) LSI (SFP24-LED-50-UE-DIM-35) DAYBRITE (FPZ-48L-835-4-DS-UNV-DIM) LITHONIA (CPX 2X4 4300LM 35K M2) DECO (556791)
F10E	DESCRIPTION: 2'x4' FIXTURE FLAT PANEL. MOUNTING: GRID CEILING FINISH: SCBA OPTICS: OPTIONS: EM: EMERGENCY BATTERY	4,800	3500K	LED (0-10V DIMMING) 1%	120/277V	50	METALUX (24FP4735C) EM LSI (SFP24-LED-50-UE-DIM-35) EM DAYBRITE (FPZ-48L-835-4-DS-UNV-DIM) EM LITHONIA (CPX 2X4 4300LM 35K M2) EM DECO (556791) EM
F11b	DESCRIPTION: 6" SQUARE DOWNLIGHT, WHITE FLANGE. MOUNTING: RECESSED, CEILING FINISH: SCBA OPTICS: WALL WASH OPTIONS: EM: NONE	2,000	3500K	LED (0-10V DIMMING) 1%	120/277V	20	LITHONIA LDN6SQ-35-20-LSW6-AR-LD-MVOLT-GZ10 HALO PRS6-FS12-D010-WALL WASH PRESCOLITE LTR-6SQD-H-ML-DM1-LTR-6SQD-T-SL-35-8-MD-SS-WALL WASH
F97	DESCRIPTION: 6'X6' LINEAR PENDANT, INDIRECT / DIRECT MOUNTING: PENDANT FINISH: SCBA OPTICS: UP INDIRECT / DIRECT, FLUSH LENS, LOW GLOSS WHITE REFLECTOR OPTIONS: EM: NONE	6,000	3500K	LED (0-10V DIMMING)	120/277V	60	ORACLE OLS-DI-LED-4-REC-6'X6'-D500L-FR-U500L-1C-DIM10-120-35K-85-WH
F98	DESCRIPTION: TBAR LIGHT MOUNTING: CEILING FINISH: SCBA OPTICS: DIFFUSE LENS OPTIONS: EM: NONE	2,000	3500K	LED (0-10V DIMMING)	120/277V	20	JLC TECH TBSL-MW-2-24-D-U-W ORACLE 4-LB-LED-2600L-DIM10-MVOLT-35K-85-TB1516-FT
F99	DESCRIPTION: CUSTOM RESTROOM SIGN MOUNTING: CEILING FINISH: SCBA OPTICS: OPTIONS: EM: NONE	5,000	3500K	LED (0-10V DIMMING)	120/277V	200	JLCTech: TBSL-(3500K)-4-24-S-X-X (Signage to be 4ft long, 6 inches tall, clear with 4" tall frosted lettering saying "RESTROOMS" and an arrow symbol. Font -Open Sans Semibold)

bhd ARCHITECTS
www.bhdarchitects.com
Phone 801.571.0010
Fax 801.571.0303
Toll Free 888.571.0010
65 East Wadsworth Park Drive
Suite 205 Draper, Utah 84020

LICENSED PROFESSIONAL ENGINEER
No. 5148728
DAVID G. HINCKLEY
4-8-24
STATE OF UTAH

SPECTRUM ENGINEERS
324 S. State St., Suite 400
Salt Lake City, UT 84111
800-678-7077
801-328-5151
fax: 801-328-5155
www.spectrum-engineers.com

THE CHURCH OF JESUS CHRIST OF LATTER-DAY SAINTS

Tooele UT Deseret Peak Sr Seminary

Approximately 2234 North Berra Boulevard, Tooele, Utah
40.565694, -112.3033347

Date: 3 Apr 2024 **BHD #:** 2326 **County Parcel:** 02-143-0-0115 **Plan Series:** Custom 5 CR **Owner #:** 501-3450

Sheet Issue and Revision Schedule

#	Date	Description
1	3 Apr 2024	Bid Documents

Lighting Fixture Schedules

EL601

4/8/2024 2:09:31 PM

4/8/2024 11:23:13 AM

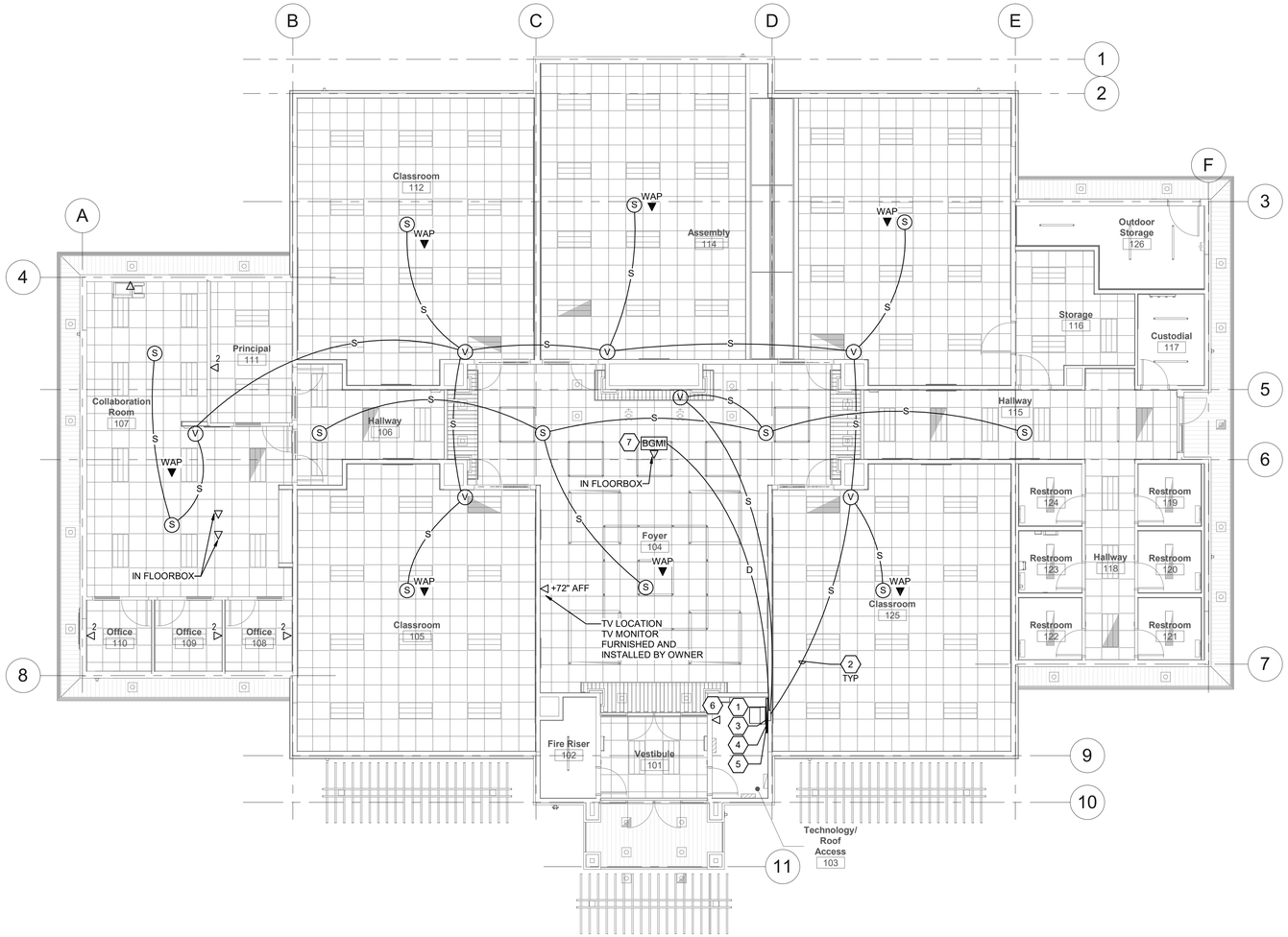

1 LEVEL 1 AV ROUGH-IN PLAN

SCALE: 1/8" = 1'-0"

GENERAL SHEET NOTES

1. NO CHANGES SHALL BE MADE WITHOUT THE PROJECT AV/STRUCTURED CABLING CONSULTANT'S WRITTEN CONSENT.
2. REFER TO DRAWINGS FOR EXACT NUMBER OF COMPONENTS USED IF NOT SPECIFIED IN EQUIPMENT LIST.
3. DIVISION 26 INSTALLER IS TO PROVIDE ALL ROUGH-IN INDICATED FOR DIVISION 27 INSTALLER. ALL ROUGH-IN SHALL COMPLY WITH ANSI/TIA/EIA 569-B STANDARDS. THIS INCLUDES, BUT IS NOT LIMITED TO, THE LIMITATION OF (2) 90° BEND FOR CONDUIT. IT IS THE DIVISION 26 INSTALLERS RESPONSIBILITY TO ENSURE COMPLIANCE WITH STANDARD. VOICE-DATA CABLE SHALL BE INSTALLED IN MINIMUM 1" CONDUIT.
4. RACEWAY SHALL BE INSTALLED BY DIVISION 26. CABLING SHALL BE INSTALLED BY DIVISION 27. VOICE-DATA CABLING AND TERMINATIONS SHALL COMPLY WITH SECTION 27 1501.
5. SPEAKER TRIM RINGS ARE FURNISHED BY DIVISION 27 AND INSTALLED BY DIVISION 26.
6. ET SHEETS SHOW WORK AND MATERIALS BY DIVISION 26 AND DIVISION 27. SEE SPECIFICATIONS AND DRAWING NOTES FOR RESPONSIBILITY FOR EACH ITEM.
7. ALL CONDUIT STUBS SHALL BE LABELED WITH DESTINATION.
8. PROVIDE 200# NYLON PULL CORD IN ALL EMPTY CONDUITS AND TAG BOTH ENDS. CONDUITS SHALL COMPLY WITH ANSI/TIA/EIA 569-A STANDARDS.
9. WHERE LOCATED IN INACCESSIBLE WALL, CEILING, OR ATTIC SPACES, AUDIO, VIDEO, AND CONTROL CABLE TO BE INSTALLED IN CONDUIT. CONDUIT SHALL BE A MINIMUM OF .75" UNLESS NOTED OTHERWISE.
10. INSTALL ALL VOICE-DATA OUTLETS WITHIN 6" OF POWER.
11. PROVIDE SEISMIC WIRES SECURED TO STRUCTURE FOR ALL SPEAKER LOCATIONS.

SHEET KEYNOTES

1 PROVIDE 1" CONDUIT TO CEILING SPACE CLOSEST TO SCHOOL FOR ANTENNA LINK TO SCHOOL. ANTENNA EQUIPMENT AT BOTH ENDS OF LINK (SEMINARY AND SCHOOL) TO BE FURNISHED AND INSTALLED BY SEMINARY AV INSTALLER.

2 SPEAKER CABLE BY DIVISION 27. CONDUIT NOT REQUIRED IN LAY-IN CEILINGS.

3 PROVIDE 3 EACH, 2" CONDUITS TO ACCESSIBLE RECEPTION AREA CEILING SPACE.

4 PROVIDE CONDUIT TO TELCO PROVIDER. VERIFY CONDUIT SIZE WITH PROVIDER.

5 PROVIDE CONDUIT TO CABLE PROVIDER. VERIFY CONDUIT SIZE WITH PROVIDER.

6 MOUNT NEXT TO 'BMG' BUILDING MANAGEMENT GATEWAY NETWORK INTERFACE. SEE SHEET ME101.

7 COORDINATE WITH ARCHITECT AND DESK MILLWORK DRAWINGS TO DETERMINE EXACT DEVICE LOCATION. CABLES FOR DATA AND 'BGMI' TO BE RUN TO DESK THROUGH FLOORBOX.

bhd ARCHITECTS
www.bhdarchitects.com
Phone 801.571.0010
Fax 801.571.0303
Toll Free 888.571.0010
65 East Wadsworth Park Drive
Suite 205 Draper, Utah 84020

LICENSED PROFESSIONAL ENGINEER
No. 5148728
DAVID G. HINCKLEY
4-8-24
STATE OF UTAH

SPECTRUM ENGINEERS
324 S. State St., Suite 400
Salt Lake City, UT 84111
800-678-7077
801-328-5151
fax: 801-328-5155
www.spectrum-engineers.com

THE CHURCH OF JESUS CHRIST OF LATTER-DAY SAINTS

Tooele UT Deseret Peak Sr Seminary

Approximately 2234 North Benn Boulevard, Tooele, Utah
40.569694, -112.303347

Date: 3 Apr 2024
BHD #: 2326
County Parcel: 02-143-0-0115
Plan Series: Custom 5 CR
Owner #: 501-3450

Sheet Issue and Revision Schedule

#	Date	Description
1	3 Apr 2024	Bid Documents

Level 1 AV Rough-in Plan

ET101

4/8/2024 11:23:13 AM

ELECTRICAL EQUIPMENT LIST

SYM	DESCRIPTION	QTY	NOTES
(V)	2-1/8" DEEP, 4-11/16" SQUARE BOX W/ 5/8" DEEP, SINGLE GANG PLASTER RING MOUNTED AT ELECTRICAL SWITCH HEIGHT	OFP	SEE DETAILS 2/ET501 AND 1/TA602
▭	12"X12"X4" JUNCTION BOXES MOUNTED PER DETAIL 1/ET501	2	
(S)	SPEAKER LOCATION, LAY-IN CEILING TILE	OFP	FURNISHED AND INSTALLED BY DIVISION 27 INSTALLER
▌	PLYWOOD BACKBOARD, .75", FIRE-TREATED, PAINTED WHITE, 2 EACH, 4'x8' SHEETS	OFP	EXTEND TO 6" ABOVE FINISHED FLOOR
△X	2-1/8" DEEP, 4-11/16" SQUARE BOX W/ 5/8" DEEP, SINGLE GANG PLASTER RING MOUNTED AT ELECTRICAL OUTLET HEIGHT OR AS NOTED, (X) = # OF DATA JACKS IF MORE THAN 1	OFP	DATA OUTLET SEE DETAIL 4/TT602
△ WAP	2-1/8" DEEP, 4-11/16" SQUARE BOX W/ 5/8" DEEP, SINGLE GANG PLASTER RING MOUNTED FLUSH IN FINISHED CEILING	OFP	DATA OUTLET FOR WIRELESS ACCESS POINT, SEE DETAILS 4/TT602 AND 5/TT602
⌒	CONDUIT WITH NYLON PULL CORD, SIZED AS NOTED OR .75", WHICHEVER IS GREATER	A/R	
S(X)	SPEAKER CABLE, INSTALL IN CONDUIT IN WALLS AND INACCESSIBLE CEILING. (X) = NUMBER OF CABLES, IF MORE THAN ONE	A/R	CONDUIT INSTALLED BY ELECTRICAL, CABLE FURNISHED AND INSTALLED BY DIVISION 27, SEE SHEET TT601

MANUFACTURER'S NAMES AND TELEPHONE NUMBERS ARE LISTED IN THE SPECIFICATIONS
A/R = AS REQUIRED, OFP = OBTAIN FROM PLANS

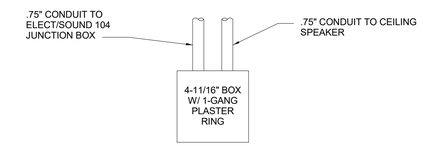

2 VOLUME CONTROL DETAIL
NTS (V)

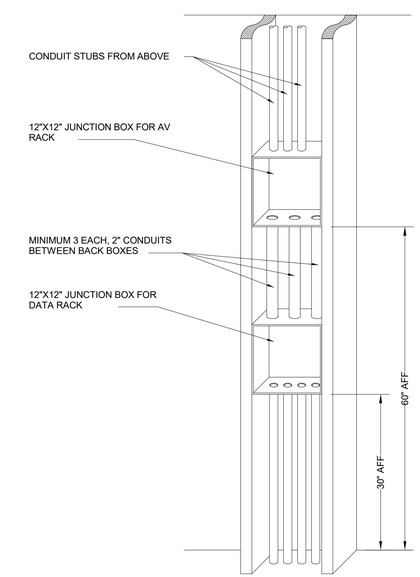

1 12"x12" IN-WALL J-BOX DETAIL
NTS

bhd ARCHITECTS
www.bhdarchitects.com
Phone 801.571.0010
Fax 801.571.0303
Toll Free 888.571.0010
65 East Wadsworth Park Drive
Suite 205 Draper, Utah 84020

LICENSED PROFESSIONAL ENGINEER
No. 5148728
DAVID G. HINCKLEY
4-8-24
STATE OF UTAH

SPECTRUM ENGINEERS
324 S. State St., Suite 400
Salt Lake City, UT 84111
800-678-7077
801-328-5151
fax: 801-328-5155
www.spectrum-engineers.com

THE CHURCH OF JESUS CHRIST OF LATTER-DAY SAINTS

Tooele UT Deseret Peak Sr Seminary

Approximately: 2234 North Bero Boulevard, Tooele, Utah
40.569694, -112.303347

Date: 3 Apr 2024 **BHD #:** 2326 **County Parcel:** 02-143-0-0115 **Plan Series:** Custom 5 CR **Owner #:** 501-3450

Sheet Issue and Revision Schedule

#	Date	Description
1	3 Apr 2024	Bid Documents

AV Rough-in Schedules

ET501

4/8/2024 11:23:14 AM

AUDIO-VIDEO SYSTEM EQUIPMENT LIST

SYM	DESCRIPTION	QTY	ACCEPTABLE TYPES
1 D	EQUIPMENT RACK, WALL MOUNTED, 12RU, AND DOOR	2	MIDDLE ATLANTIC DWR-12-22, PFD-12
AI	AUDIO INTERFACE, STEREO UNBALANCED TO MONO BALANCED, PASSIVE	A/R	EXTRON ASA141 RADIO DESIGN LABS TX-J2
MA	MIXER AMPLIFIER, 120 WATT	OFP	TOA A-712 ATLAS SOUND AA120
TVSS	TRANSIENT VOLTAGE SURGE SUPPRESSOR, 15 AMP, IN LECTERN	OFP	TRIPP-LITE ISOBAR 6 ULTRA, OR APPROVED EQUAL
	TRANSIENT VOLTAGE SURGE SUPPRESSOR, 20 AMP, RACK MOUNTED	OFP	TRIPP-LITE IBAR 12-20 ULTRA, OR APPROVED EQUAL
S	SPEAKER, 4" W/ GRILLE, ENCLOSURE, AND TILE BRIDGE, LAY-IN CEILING TILE	OFP	ATLAS SOUND FAP42T COMMUNITY C4
V	VOLUME CONTROL	OFP	EMTECH MSC-V35 ATLAS SOUND AT35D LABEL PER DETAIL
	NYLON DECORA COVER PLATE, 1-GANG		HUBBELL OR LEVITON
BSC	BELL SYSTEM CONTROLLER	OFP	ALGO 8301 PAGING ADAPTER
BGMI	BACKGROUND MUSIC INPUT PLATE	OFP	ALGO 1205 AUDIO INTERFACE
	LINE TRANSFORMER	A/R	RADIO DESIGN LABS TX-1A PRO CO LOT-1
PR	SCHOOL INTERCOM TRANSMITTER, ASSEMBLY		
	TRANSMITTER	1	COMTEK 3ST 75-216
	ANTENNA	1	LAIRD Y2503 YAGI UDA 9Db *
	MOUNT, W/RUBBER PAS AND BALLAST	1	EZ UP EZ-NP-60-200
	50 OHM EXTERIOR CABLE AND CONNECTORS	1	TIMES LMR-600 W/ APPROPRIATE CONNECTORS
	RECEIVER, WITH MOUNT AND PHANTOM POWER CABLE	1	COMTEK PR-216 OPTION 7 RECIEVER W/ MBS-216 AND CB-86 XLM
	ANTENNA AND STANDARD CABLE		PRA-216 PHASE RIGHT ANTENNA NOTES: 1. MOUNT TRANSMIT ANTENNA ON PUBLIC SCHOOL ROOF, IN LINE OF SIGHT OF SEMINARY BUILDING. USE AN EXISTING ROOF PENETRATION. 2. MOUNT RECEIVE ANTENNA ABOVE CEILING TILE AT LOCATION CLOSEST TO TRANSMIT ANTENNA. 3. VERTICALLY POLARIZE BOTH ANTENNAS.

MANUFACTURER'S NAMES AND TELEPHONE NUMBERS ARE LISTED IN THE SPECIFICATIONS
A/R = AS REQUIRED, OFP = OBTAIN FROM PLANS
OFI = OWNER FURNISHED AND INSTALLED, OFCI = OWNER FURNISHED, CONTRACTOR INSTALLED

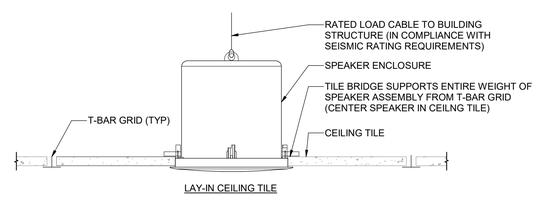

1 CEILING SPEAKER INSTALLATION DETAIL

SCALE: 1/8" = 1'-0"

GENERAL PROJECT NOTES

1. NO CHANGES SHALL BE MADE WITHOUT THE PROJECT AUDIO-VISUAL/ACOUSTICAL CONSULTANT'S WRITTEN CONSENT.
2. REFER TO DRAWINGS FOR EXACT NUMBER OF COMPONENTS USED IF NOT SPECIFIED IN EQUIPMENT LIST.
3. SEE 'ET' SHEETS FOR DEVICE LOCATIONS AND COORDINATION.
4. SEE 'TT' SHEETS FOR ADDITIONAL COORDINATION.
5. PROVIDE ALL CONNECTORS, CABLES, POWER SUPPLIES, RACK MOUNT KITS, ETC. AS NECESSARY FOR A COMPLETE SYSTEM.

DEFINITIONS

NOTE: ALL DEFINITIONS MAY NOT BE USED.

INDICATED: THE TERM "INDICATED" REFERS TO GRAPHIC REPRESENTATIONS, NOTES, OR SCHEDULES ON THE DRAWINGS, OTHER PARAGRAPHS OR SCHEDULES IN THE SPECIFICATIONS, AND SIMILAR REQUIREMENTS IN THE CONTRACT DOCUMENTS. WHERE TERMS SUCH AS "SHOWN", "NOTED", "SCHEDULED", AND "SPECIFIED" ARE USED, IT IS TO HELP THE READER LOCATE THE REFERENCE, NO LIMITATION ON LOCATION IS INTENDED.

DIRECTED: TERMS SUCH AS "DIRECTED", "REQUESTED", AUTHORIZED", "SELECTED", "APPROVED", "REQUIRED", AND "PERMITTED" MEAN "DIRECTED BY THE ENGINEER", "REQUESTED BY THE ENGINEER", AND SIMILAR PHRASES.

APPROVE: THE TERM "APPROVED", WHERE USED IN CONJUNCTION WITH THE ENGINEER'S ACTION ON THE CONTRACTOR'S SUBMITTALS, APPLICATIONS, AND REQUESTS, IS LIMITED TO THE ENGINEER'S DUTIES AND RESPONSIBILITIES AS STATED IN GENERAL AND SUPPLEMENTARY CONDITIONS.

FURNISH: THE TERM "FURNISH" IS USED TO MEAN "SUPPLY AND DELIVER TO THE PROJECT SITE, READY FOR UNLOADING, UNPACKING, ASSEMBLY, INSTALLATION, AND SIMILAR OPERATIONS."

INSTALL: THE TERM "INSTALL" IS USED TO DESCRIBE OPERATIONS AT PROJECT SITE INCLUDING THE ACTUAL "UNLOADING, UNPACKING, ASSEMBLY, ERECTION, PLACING, ANCHORING, APPLYING, WORKING TO DIMENSION, FINISHING, CURING, PROTECTING, CLEANING, AND SIMILAR OPERATIONS."

PROVIDE: THE TERM "PROVIDE" MEANS "TO FURNISH AND INSTALL, COMPLETE AND READY FOR THE INTENDED USE."

INSTALLER: AN "INSTALLER" IS THE CONTRACTOR OR AN ENTITY ENGAGED BY THE CONTRACTOR, EITHER AS AN EMPLOYEE, SUBCONTRACTOR, OR SUB-SUBCONTRACTOR, FOR PERFORMANCE OF A PARTICULAR CONSTRUCTION ACTIVITY, INCLUDING INSTALLATION, ERECTION, APPLICATION, AND SIMILAR OPERATIONS. INSTALLERS ARE REQUIRED TO BE EXPERIENCED IN THE OPERATIONS THEY ARE ENGAGED TO PERFORM.

TECHNOLOGY SYSTEMS: THE TERM "TECHNOLOGY SYSTEMS" IS USED TO DESCRIBE ALL LOW VOLTAGE SYSTEMS. THESE SYSTEMS INCLUDE BUT ARE NOT NECESSARILY LIMITED TO ALL SYSTEMS WHICH UTILIZE VOLTAGES OF LESS THAN 71 VOLTS SUCH AS SOUND SYSTEMS, VIDEO SYSTEMS, TV SYSTEMS, SECURITY SYSTEMS, VOICE AND DATA CABLING SYSTEMS, ETC...

ABBREVIATIONS

NOTE: ALL ABBREVIATIONS MAY NOT BE USED.

A	AUDIO
A/R ADJ	AS REQUIRED
C	ADJACENT
CAT	CONDUIT
CFI	CATEGORY
CV	CONTRACTOR FURNISHED AND INSTALLED
DVI	COMPOSITE VIDEO
DVD	DIGITAL VISUAL INTERFACE
E	DIGITAL VERSATILE DISK
EA	ENHANCED
EX	EACH
GR	EXISTING
HDMI	GROUND
I.O.F.	HIGH-DEFINITION DIGITAL MEDIA INTERFACE
L	INSTALLATION OF OWNER FURNISHED EQUIPMENT
MIC	LEFT AUDIO CHANNEL, LINE LEVEL
N/A	MIC LEVEL AUDIO
N.I.C.	NOT APPLICABLE
OFCI	NOT IN CONTRACT
OFI	OWNER FURNISHED AND CONTRACTOR INSTALLED
OFP	OWNER FURNISHED AND INSTALLED
QTY	OBTAIN FROM PLANS
OP	QUANTITY
POE	OWNER PROVIDED
R	POWER OVER ETHERNET
RGBHV	RIGHT AUDIO CHANNEL, LINE LEVEL
RMK	COMPUTER VIDEO
RU	RACK MOUNT KIT
TYP	RACK UNIT, 1.75"
V	TYPICAL
VGA	VOLT
VHS	VIDEO GRAPHICS ARRAY
W/	VIDEO HOME SYSTEM
YC	WITH
YPP	S-VIDEO
	COMPONENT VIDEO

bhd ARCHITECTS
www.bhdarchitects.com
Phone 801.571.0010
Fax 801.571.0303
Toll Free 888.571.0010
65 East Wadsworth Park Drive
Suite 205 Draper, Utah 84020

LICENSED PROFESSIONAL ENGINEER
No. 5148728
DAVID G. HINCKLEY
4-8-24
STATE OF UTAH

SPECTRUM ENGINEERS
324 S. State St., Suite 400
Salt Lake City, UT 84111
800-678-7077
801-328-5151
fax: 801-328-5155
www.spectrum-engineers.com

THE CHURCH OF JESUS CHRIST OF LATTER-DAY SAINTS

Tooele UT Deseret Peak Sr Seminary

Approximately 2234 North Berra Boulevard, Tooele, Utah
40.569694, -112.303347

Date: 3 Apr 2024
BHD #: 2326
County Parcel: 02-143-0-0115
Plan Series: Custom 5 CR
Owner #: 501-3450

Sheet Issue and Revision Schedule

#	Date	Description
1	3 Apr 2024	Bid Documents

AV Rough-in Diagrams and Details

TA601

4/8/2024 11:23:15 AM

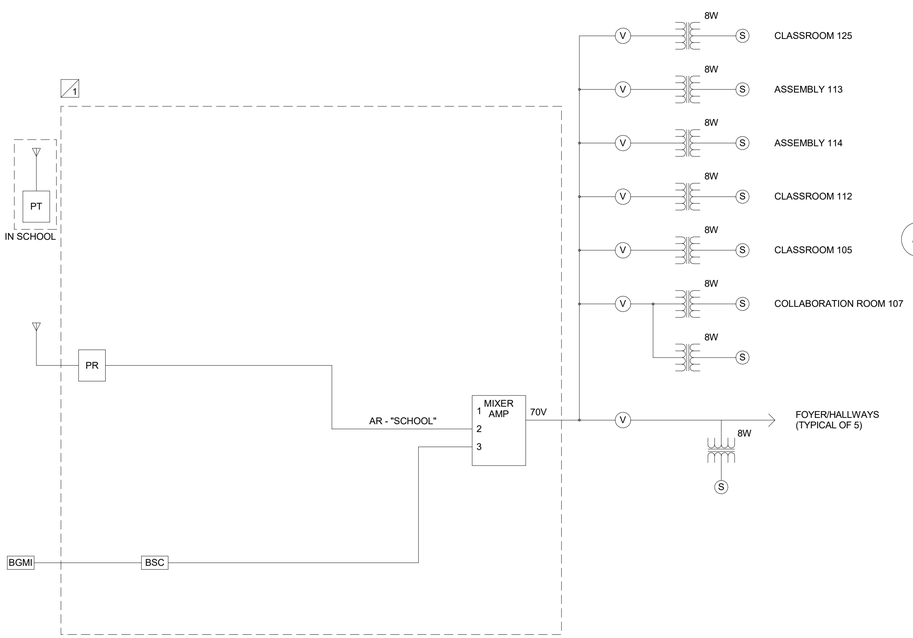

5 SUPPORT SPECIALIST
NTS

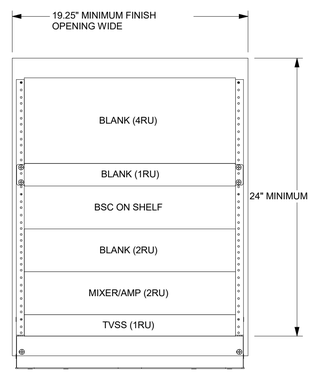

4 AV SUPPORT SPECIALIST
EQUIPMENT RACK DETAIL
NTS

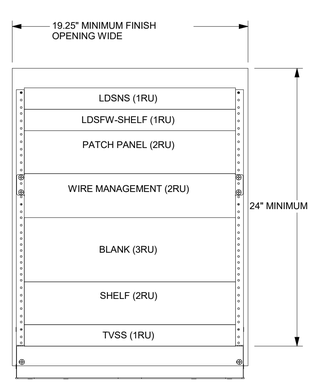

3 IT SUPPORT SPECIALIST
EQUIPMENT RACK DETAIL
NTS

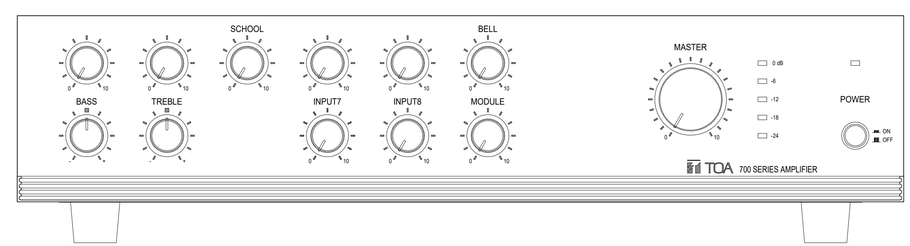

2 MIXER AMPLIFIER LABELS "MA"
NTS

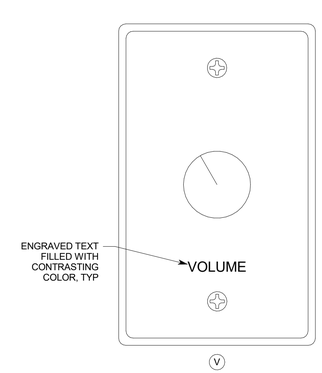

1 VOLUME CONTROLS "V"
NTS

bhd ARCHITECTS
www.bhdarchitects.com
Phone 801.571.0010
Fax 801.571.0303
Toll Free 888.571.0010
65 East Wadsworth Park Drive
Suite 205 Draper, Utah 84020

LICENSED PROFESSIONAL ENGINEER
No. 5148728
DAVID G. HINCKLEY
4-8-24
STATE OF UTAH

SPECTRUM ENGINEERS
324 S. State St., Suite 400
Salt Lake City, UT 84111
800-678-7077
801-328-5151
fax: 801-328-5155
www.spectrum-engineers.com

THE CHURCH OF
JESUS CHRIST
OF LATTER-DAY SAINTS

Tooele UT Deseret Peak Sr Seminary

Approximately: 2234 North Bero Boulevard, Tooele, Utah
40.569694, -112.303347

Date: 3 Apr 2024
BHD #: 2326
County Parcel: 02-143-0-0115
Plan Series: Custom 5 CR
Owner #: 501-3450

Sheet Issue and Revision Schedule

#	Date	Description
1	3 Apr 2024	Bid Documents

AV Rough-in Diagrams and Details

TA602

VOICE-DATA SYSTEM EQUIPMENT/CABLE LIST

THE FOLLOWING IS A PARTIAL LIST OF MATERIALS FOR THE DATA/PHONE SYSTEM. REFER TO SPECIFICATION 27 1501 FOR FULL REQUIREMENTS. VERIFY ALL PART NUMBERS WITH MANUFACTURER'S CATALOG NUMBERS AND NOTIFY CONSULTANT OF DISCREPANCIES PRIOR TO BIDDING. FURNISH MISCELLANEOUS HARDWARE NOT LISTED TO PROVIDE A COMPLETE SYSTEM.

SYM	DESCRIPTION	ACCEPTABLE TYPES
TELCO DEMARC	TELECOMMUNICATIONS PROVIDER DEMARCATION POINT	FURNISHED AND INSTALLED BY PROVIDER
ISP DEMARC	INTERNET SERVICE PROVIDER DEMARCATION POINT	FURNISHED AND INSTALLED BY PROVIDER
DPP	PATCH PANEL, DATA, 48-PORT W/ CAT 6 INSERT, BLUE (QUANTITIES OF PORTS AS REQUIRED +25%)	SEE SPECIFICATION 271501
TVSS	SURGE SUPPRESSOR AND SWITCHER W/ UL LISTED PLUG STRIP	FURNISHED AND INSTALLED BY AV INSTALLER
	UL LISTED POWER STRIP	6 OUTLET POWER STRIP OR EQUAL
D(#)	STATION CABLE, DATA-CAT 6, DATA, (#) INDICATES NUMBER OF CABLES IF MORE THAN ONE	SEE SPECIFICATION 271501
WAP	DATA OUTLET, WIRELESS ACCESS POINT SINGLE GANG BEZEL	SEE SPECIFICATION 271501
	BEZEL INSERTS	SEE SPECIFICATION 271501
	CAT 6 JACK-DATA (1)	SEE SPECIFICATION 271501
X	DATA OUTLET SINGLE GANG BEZEL	SEE SPECIFICATION 271501
	BEZEL INSERTS	SEE SPECIFICATION 271501
	CAT 6 JACK-DATA (X) INDICATED # OF JACKS, IF MORE THAN ONE	SEE SPECIFICATION 271501
	COPPER CAT 6 PATCH CABLES (1 DROP +25%)	SEE SPECIFICATION 271501
	CAT 6 J-HOOKS	CADDY CAT32Z34
HWM	HORIZONTAL WIRE MANAGER HORIZONTAL WIRE MANAGER SHALL NOT HAVE A DEPTH OF MORE THAN 3"	SEE SPECIFICATION 271501
NS	NETWORK SWITCH, OWNER STANDARD (IEA-IS FOR INTERNET ENABLED APPLIANCES) CONNECT NETWORK DEVICES REQUIRING 'POE' TO 'POE' PORTS ON SWITCH	OWNER FURNISHED-CONTRACTOR INSTALLED
	2 RACK UNIT SHELF FOR 'POE' SWITCH	MIDDLE ATLANTIC USM-11.5
FW	INTERNET FIREWALL, OWNER STANDARD	OWNER FURNISHED-CONTRACTOR INSTALLED
	2 RACK UNIT SHELF	MIDDLE ATLANTIC USM-11.5
ISP MODEM	INTERNET SERVICE MODEM	OWNER FURNISHED-CONTRACTOR INSTALLED
110 BLOCK	110 PUNCH DOWN BLOCK, CAT6	SEE SPECIFICATIONS 271501
WAP	WIRELESS ACCESS POINT. OWNER STANDARD. INSTALL AT EACH 'WAP' LOCATION SHOWN ON ET101.	OWNER FURNISHED-CONTRACTOR INSTALLED

NOTE: ALL PATCH PANELS AND ACCESSORIES SHALL BE BLACK IN COLOR

AUDIO-VIDEO CABLE EQUIPMENT LIST

SYM	DESCRIPTION	QTY	ACCEPTABLE TYPES
L(X)	LINE LEVEL CABLE, (X) INDICATES NUMBER OF CABLES, IF MORE THAN ONE	A/R	BELDEN 9451 WEST PENN 454 LIBERTY 22-1P-EZ OR AS APPROVED BY CONSULTANT
S(X)	SPEAKER CABLE, (X) INDICATES NUMBER OF CABLES, IF MORE THAN ONE	A/R	BELDEN 8471 WEST PENN 225 LIBERTY 16-2C-GRY OR AS APPROVED BY CONSULTANT

MANUFACTURER'S NAMES AND TELEPHONE NUMBERS ARE LISTED IN THE SPECIFICATIONS
A/R = AS REQUIRED

GENERAL PROJECT NOTES

1. LABEL ALL CABLE REGARDLESS OF LENGTH.
2. THE EQUIPMENT LABELING IDENTIFIED ON DETAILS IN THESE DRAWINGS ARE EXAMPLES ONLY. PRIOR TO FABRICATION, SUBMIT THE NOMENCLATURE FOR ALL CABLING AND EQUIPMENT TO THE CONSULTANT APPROVAL.
3. COIL 5 FEET OF EXTRA VOICE-DATA CABLE AT THE TECHNOLOGY ROOM AND 18" AT THE OUTLET FOR EACH CABLE RUN.
4. USE CADDY CLIPS FOR ALL CABLE OUTSIDE OF CONDUIT.
5. ALL CABLE AND UTP TO TERMINATE ON BOTH ENDS.
6. ALL VOICE-DATA OUTLETS ON WALLS SHALL BE MOUNTED WITHIN 6" OF A POWER OUTLET. IF CONTRADICTIONS ARISE ON PLANS, NOTIFY ENGINEER.
7. REFER TO SHEET ET101 FOR VOICE-DATA JACK LOCATIONS, AND SHEET TA601 FOR ROUTING OF AV CABLE.
8. EQUIPMENT RACK TO BE INSTALLED BY AV INSTALLER.
9. ALL VOICE-DATA CABLING AND EQUIPMENT SHALL BE INSTALLED ACCORDING TO DIVISION 27 1501.
10. INSTALL OWNER FURNISHED LDS NETWORK EQUIPMENT SHOWN. AS PART OF INSTALLATION SET UP AND CONFIGURE DEVICES IN ACCORDANCE WITH LDS REQUIREMENTS. COORDINATE WITH LOCAL FACILITIES MANAGER.
11. COORDINATE WITH FACILITIES MANAGER AND PROJECT MANAGER WELL IN ADVANCE OF PROJECT COMPLETION TO ENSURE INSTALLATION OF ALL OWNER FURNISHED EQUIPMENT IS INSTALLED AND SET UP PROPERLY. IN ADDITION, ENSURE OWNER PROVIDES INTERNET SERVICE TO BUILDING PRIOR TO FINAL INSTALLATION OF AV AND VOICE DATA EQUIPMENT.
12. INSTALL A DATA PATCH CABLE TO NS FOR ALL DATA LOCATIONS SHOWN ON PLANS.
13. FURNISH AND INSTALL ALL AUDIO-VIDEO CABLE SHOWN. PROVIDE 3 FEET EXTRA CABLE AT OUTLET END AND 15' EXTRA CABLE AT EQUIPMENT RACK. COIL AND LABEL.
14. INSTALL PATCH IN AND SET-UP OWNER FURNISHED WIRELESS ACCESS POINTS.
15. SEE 'TA' AND 'ET' SHEETS FOR DEVICE LOCATIONS AND ADDITIONAL COORDINATION.

bhd ARCHITECTS
www.bhdarchitects.com
Phone 801.571.0010
Fax 801.571.0303
Toll Free 888.571.0010
65 East Wadsworth Park Drive
Suite 205 Draper, Utah 84020

LICENSED PROFESSIONAL ENGINEER
No. 5148728
DAVID G. HINCKLEY
4-8-24
STATE OF UTAH

SPECTRUM ENGINEERS
324 S. State St., Suite 400
Salt Lake City, UT 84111
800-678-7077
801-328-5151
fax: 801-328-5155
www.spectrum-engineers.com

THE CHURCH OF JESUS CHRIST OF LATTER-DAY SAINTS

Tooele UT Deseret Peak Sr Seminary

Approximately: 2234 North Bero Boulevard, Tooele, Utah
40.569694, -112.303347

Date: 3 Apr 2024
BHD #: 2326
County Parcel: 02-143-0-0115
Plan Series: Custom 5 CR
Owner #: 501-3450

Sheet Issue and Revision Schedule

#	Date	Description
1	3 Apr 2024	Bid Documents

Data Systems Schedules

TT601

4/8/2024 11:23:16 AM

NOTE:

NUMBER SHOWN MATCHES DESIGN ROOM NUMBERS. FINAL LABELING FOR PATCH PANEL AND OUTLETS SHALL MATCH SIGNAGE POSTED FOR ROOMS.

1 PATCH PANEL DETAIL, 24-PORT, TYPICAL
NTS

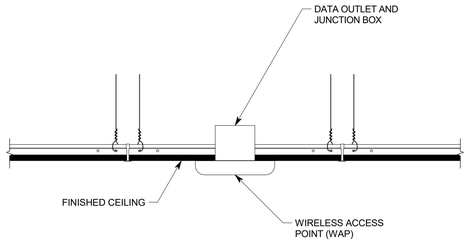

5 WIRELESS ACCESS POINT (WAP)
NTS

WAP

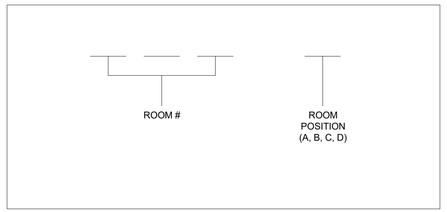

2 CABLE LABEL DETAIL
NTS

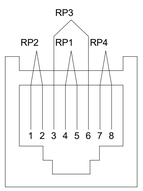

PIN #	RP/COLOR
5	T1-W/BL
4	R1-BL/W
1	T2-W/O
2	R2-0/W
3	T3-W/GR
6	R3-GR/W
7	T4-W/BR
8	R4-BR/W

3 OUTLET PINNING DETAIL
NTS

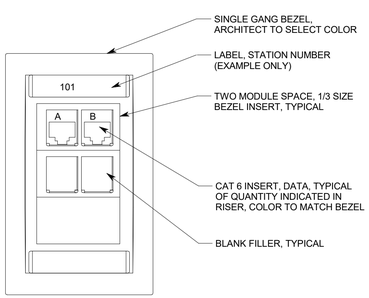

4 TYP VOICE-DATA OUTLET
NTS

X

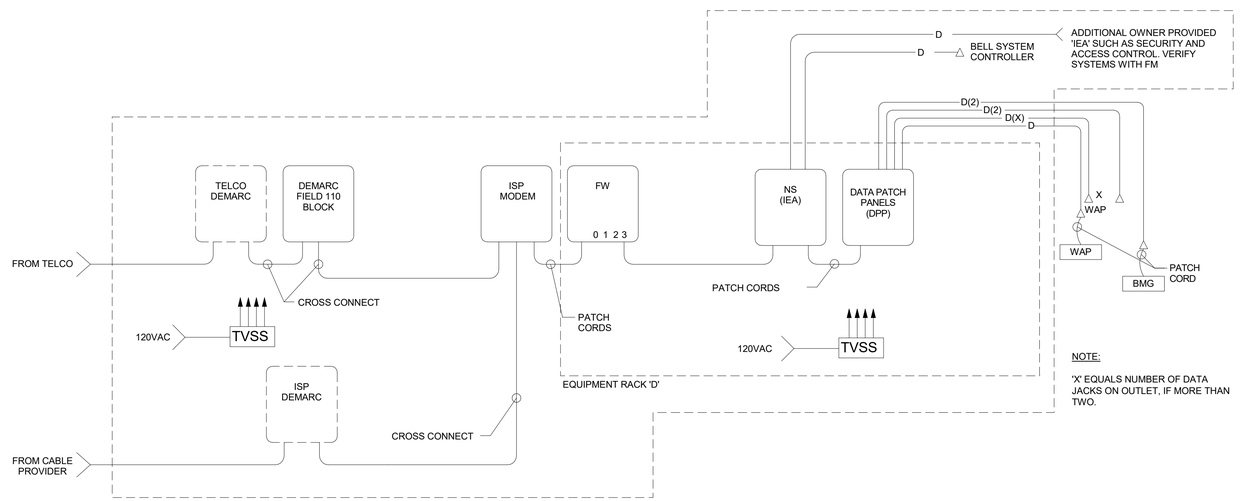

WALL FIELD EQUIPMENT PLATFORM

NOTE:

'X' EQUALS NUMBER OF DATA JACKS ON OUTLET, IF MORE THAN TWO.

6 STRUCTURED CABLING RISER DIAGRAM
NTS

bhd ARCHITECTS
www.bhdarchitects.com
Phone 801.571.0010
Fax 801.571.0303
Toll Free 888.571.0010
65 East Wadsworth Park Drive
Suite 205 Draper, Utah 84020

LICENSED PROFESSIONAL ENGINEER No. 5148728 DAVID G. HINCKLEY 4-8-24 STATE OF UTAH

SPECTRUM ENGINEERS
324 S. State St., Suite 400
Salt Lake City, UT 84111
800-678-7077
801-328-5151
fax: 801-328-5155
www.spectrum-engineers.com

THE CHURCH OF JESUS CHRIST OF LATTER-DAY SAINTS

Tooele UT Deseret Peak Sr Seminary

Approximately: 2234 North Bero Boulevard, Tooele, Utah
40.569694, -112.303347

Date: 3 Apr 2024
BHD #: 2326
County Parcel: 02-143-0-0115
Plan Series: Custom 5 CR
Owner #: 501-3450

Sheet Issue and Revision Schedule

#	Date	Description
1	3 Apr 2024	Bid Documents

Data Systems Riser Diagrams and Details

TT602

4/8/2024 11:23:16 AM