SALT LAKE CITY INTERNATIONAL AIRPORT

SLCDA DOCK 3 DOOR REPLACEMENT

3920 W TERMINAL DRIVE
SALT LAKE CITY, UTAH 84116

PROJECT NO. 542612

MAYOR OF SALT LAKE CITY ERIN MEDENHALL EXECUTIVE DIRECTOR OF AIRPORTS BILL WYATT	STATE OF UTAH RICHARD BROCK PETERSON NO. 136519 LICENSED ARCHITECT	**DESIGN & CONSTRUCTION MANAGEMENT DIVISION** SALT LAKE CITY DEPARTMENT OF AIRPORTS P.O. BOX 145550 SALT LAKE CITY, UT 84114-5550 TELEPHONE (801) 575-2900	SLC DEPARTMENT OF AIRPORTS	ROBERT S. BAILEY ASSISTANT DIRECTOR OF DESIGN & PROJECT MANAGEMENT 11-17-2025	CONSTRUCTION DOCUMENTS PROJECT NO. 542612 SHEET NO. _____ OF SHEETS

DRAWING INDEX

DRAWING INDEX	
SHEET NUMBER	SHEET NAME
GENERAL	
G000	COVER SHEET
G001	DRAWING INDEX, SYMBOLS AND ABBREVIATIONS
2	
ARCHITECTURAL	
AD100	REMOVAL FLOOR PLAN
AE111	FLOOR PLAN, ELEVATION, SECTIONS
2	
STRUCTURAL	
SE101	PLANS, NOTES AND DETAILS
1	
MECHANICAL	
M001	MECHANICAL SYMBOLS & LEGENDS
MH101	MECHANICAL PLANS
MH501	MECHANICAL DETAILS
3	
FIRE	
FP101	FIRE PROTECTION PLANS
1	

DRAWING INDEX	
SHEET NUMBER	SHEET NAME
ELECTRICAL	
EG001	GENERAL NOTES & SYMBOLS LISTS
EG501	ELECTRICAL DETAILS
EE101	ELEC. DEMO AND POWER PLANS
EP801	ELECTRICAL SCHEDULES
4	

ABBREVIATIONS

AFF	ABOVE FINISH FLOOR
CMU	CONCRETE MASONRY UNIT
EIFS	EXTERIOR INSULATED FINISH
EQ	EQUAL
MAX	MAXIMUM
MIN	MINIMUM
NIC	NOT IN CONTRACT
O.C.	ON CENTER
SPEC	SPECIFICATION
SIM	SIMILAR
TYP	TYPICAL
T.O.	TOP OF
B.O.	BOTTOM OF

MATERIAL LEGEND

- GYPSUM BOARD OR CONCRETE SURFACE
- CONCRETE
- STUD WALL
- GRAVEL
- COMPACTED FILL AND/OR EARTH
- CMU (CONCRETE MASONRY UNIT)
- BATT INSULATION
- RIGID INSULATION

SYMBOLS LEGEND

ROOM IDENTIFICATION NUMBER	ROOM NAME / NUM — ROOM NAME / ROOM NUMBER
DOOR NUMBER	XXX
REFERENCE NOTE	XX.XX
GLAZING TYPE	X
PARTITON WALL TYPE	XX
INTERIOR ELEVATION	A1 A2 A3 A4 — SHADE INDICATES ELEVATED WALL; ELEVATION NUMBER; SHEET NUMBER
BUILDING SECTION	SECTION NUMBER; SHEET NUMBER
WALL SECTION	SECTION NUMBER; SHEET NUMBER
EXTERIOR ELEVATION	ELEVATION NUMBER; SHEET NUMBER
DETAIL	DETAIL NUMBER; SHEET NUMBER
DETAIL TITLE	A1 DETAIL SCALE:
REVISION DELTA	2 — REVISION NUMBER

PROJECT TEAM

PROJECT ARCHITECT

GSBS ARCHITECTS
375 WEST 200
SALT LAKE CITY
801.521.8600

PROJECT STRUCTURAL

DUNN ASSOCIATES, INC.
380 West 800 South, Suite 100
SALT LAKE CITY
801.575.8877

PROJECT MECHANICAL

RESOLUT GROUP
181 E 5600 S, Suite 200
MURRAY
801.530.3148

PROJECT ELECTRICAL

ENVISION ENGINEERING
240 E Morris Avenue, Suite 200
SALT LAKE CITY
801.534.1130

SITE MAP

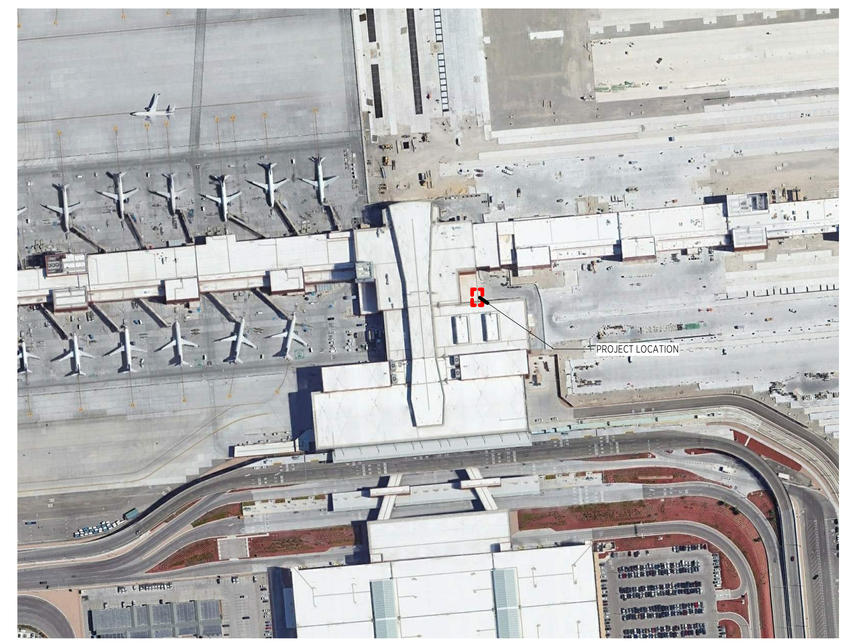

GSBS ARCHITECTS

STATE OF UTAH
RICHARD BROCK PETERSON
NO. 136510
LICENSED ARCHITECT

REVISIONS

NO.	DATE	REMARKS	BY	APV

DESIGNED	Designer	11/17/2025 DATE
DRAWN	Author	11/17/2025 DATE
CHECKED	Checker	11/17/2025 DATE
APPROVED	Approver	
DATE	11/17/2025	

SLC DEPARTMENT OF AIRPORTS

ENGINEERING DIVISION
SALT LAKE CITY
DEPARTMENT OF AIRPORTS
P.O. BOX 145550
SALT LAKE CITY, UT 84114-5550
PROJECT ADDRESS:
3851 WEST 1200 NORTH

SALT LAKE CITY INTERNATIONAL AIRPORT
SLCDA DOCK 3 DOOR REPLACEMENT
CONSTRUCTION DOCUMENTS
DRAWING INDEX, SYMBOLS AND ABBREVIATIONS

PROJECT 542612
G001
SHEET: OF

EXISTING COILING DOOR TO BE REMOVED COMPLETELY.

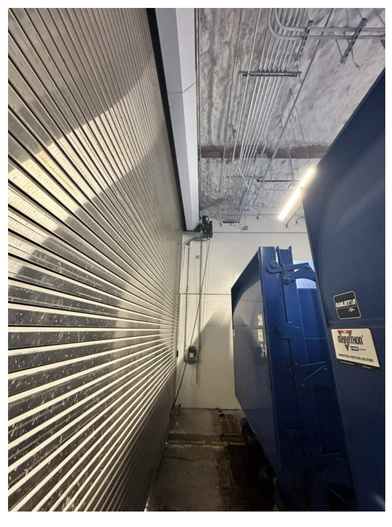

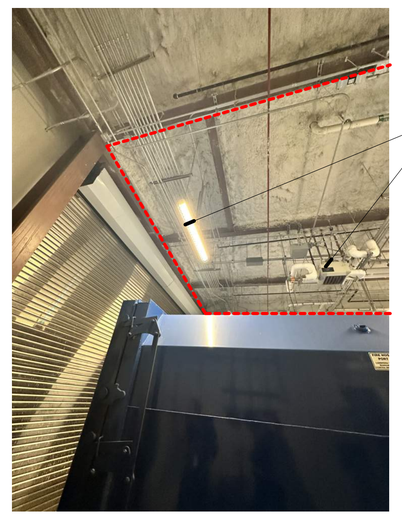

EXISTING LIGHT FIXTURES AND MECHANICAL EQUIPMENT TO BE RELOCATED. REFER TO ELECTRICAL AND MECHANICAL DRAWINGS FOR MORE INFORMATION.

3 AD100 EXISTING CONDITIONS
1/4" = 1'-0"

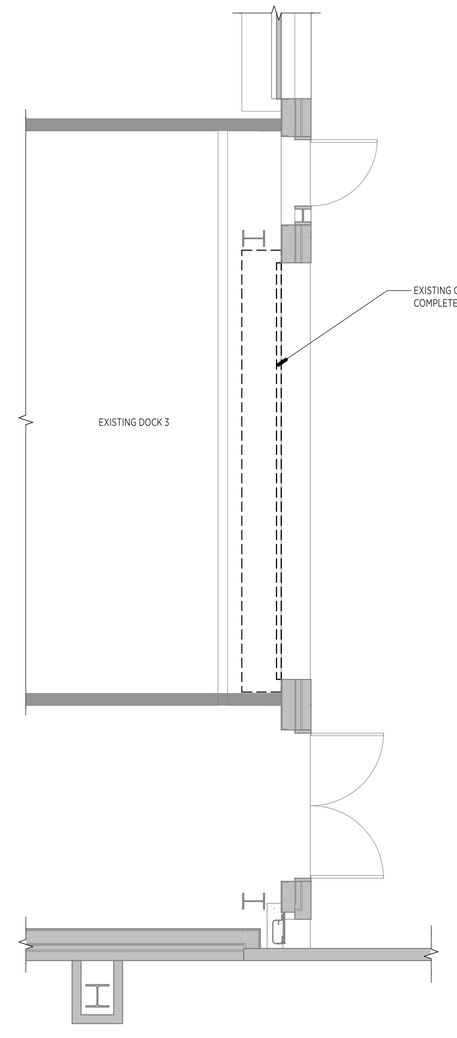

1 AD100 REMOVAL PLAN
1/4" = 1'-0"

GSBS ARCHITECTS

STATE OF UTAH
RICHARD BROCK PETERSON
NO. 136516
LICENSED ARCHITECT

REVISIONS				
NO.	DATE	REMARKS	BY	APV

DESIGNED	Designer	11/17/2025 DATE
DRAWN	Author	11/17/2025 DATE
CHECKED	Checker	11/17/2025 DATE
APPROVED	Approver	
DATE	11/17/2025	

SLC DEPARTMENT OF AIRPORTS

ENGINEERING DIVISION
SALT LAKE CITY
DEPARTMENT OF AIRPORTS
P.O. BOX 145550
SALT LAKE CITY, UT 84114-5550
PROJECT ADDRESS:
3851 WEST 1200 NORTH

SALT LAKE CITY INTERNATIONAL AIRPORT
SLCDA DOCK 3 DOOR REPLACEMENT

CONSTRUCTION DOCUMENTS
REMOVAL FLOOR PLAN

PROJECT 542612

AD100

SHEET: OF

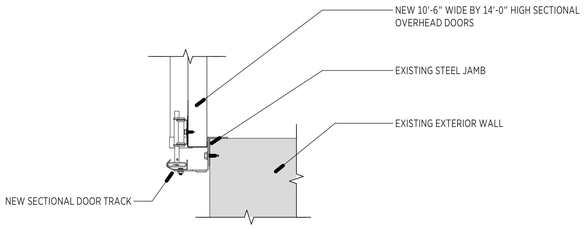

5 AE111 SECTIONAL DOOR
1 1/2" = 1'-0"

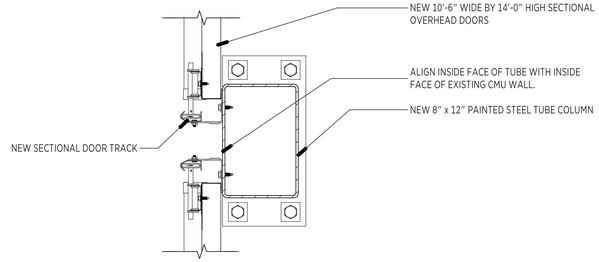

4 AE111 JAMB DETAIL @TUBE COLUMN
1 1/2" = 1'-0"

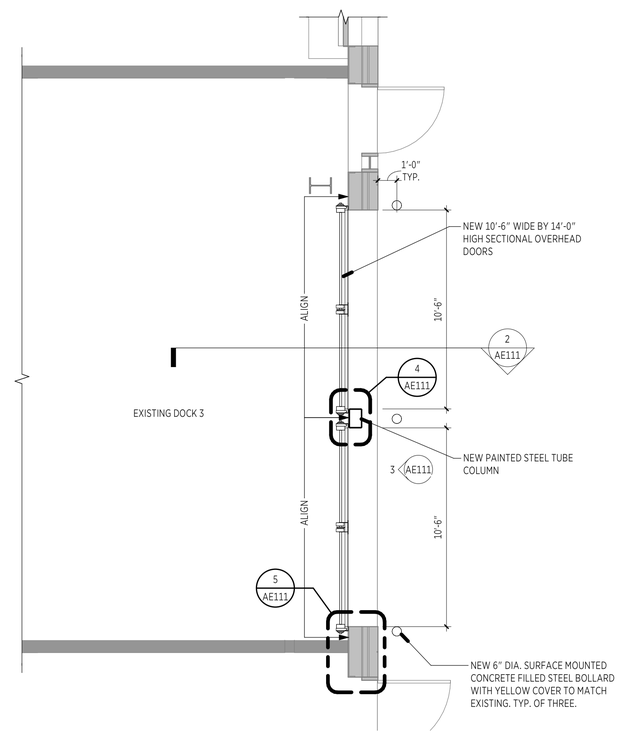

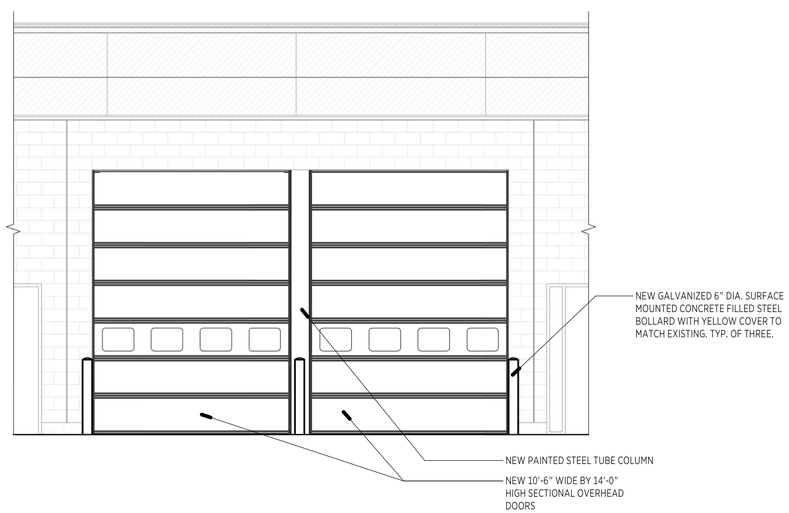

3 AE111 ELEVATION
1/4" = 1'-0"

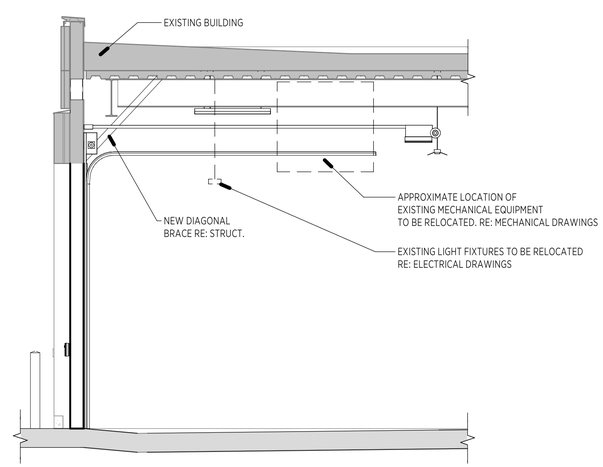

2 AE111 WALL SECTION
1/4" = 1'-0"

1 AE111 FLOOR PLAN
1/4" = 1'-0"

N

GSBS ARCHITECTS

STATE OF UTAH
RICHARD BROCK PETERSON
NO. 136519
LICENSED ARCHITECT

REVISIONS

NO.	DATE	REMARKS	BY	APV

DESIGNED	Designer	11/17/2025 DATE
DRAWN	Author	11/17/2025 DATE
CHECKED	Checker	11/17/2025 DATE
APPROVED	Approver	
DATE	11/17/2025	

SLC DEPARTMENT OF AIRPORTS

ENGINEERING DIVISION
SALT LAKE CITY
DEPARTMENT OF AIRPORTS
P.O. BOX 145550
SALT LAKE CITY, UT 84114-5550
PROJECT ADDRESS:
3851 WEST 1200 NORTH

SALT LAKE CITY INTERNATIONAL AIRPORT
SLCDA DOCK 3 DOOR REPLACEMENT

CONSTRUCTION DOCUMENTS
FLOOR PLAN, ELEVATION, SECTIONS

PROJECT 542612

AE111

SHEET: OF

GENERAL

1. The structural notes are intended to complement the project specifications. Specific notes and details in the drawings shall govern over the structural notes and typical details.
2. Typical details and sections shall apply where specific details are not shown.
3. The contractor shall verify all site conditions and dimensions. If actual conditions differ from those shown in the contract drawings, the contractor shall immediately notify the architect/engineer before proceeding with the fabrication or construction of any affected elements. Discrepancies should be brought the attention of the architect prior to fabrication or construction.
4. Drawings shall not be scaled for the purpose of preparing shop drawings or for construction. Where dimensions on the design drawings are not provided or inferred, the contractor may scale drawings only to estimate member lengths for the purpose of bidding.
5. Changes to these contract drawings may be made only by an authorized representative of Dunn Associates, Inc. Dunn Associates, Inc. shall not be held responsible or liable for any claims arising directly or indirectly from changes made without written authorization by an authorized representative of Dunn Associates, Inc.
6. Omissions or conflicts between the contract drawings and/or specifications shall be brought to the attention of the architect/engineer before proceeding with any work involved. In case of conflict, follow the most stringent requirement as directed by the architect/engineer at no additional cost to the owner.
7. The contractor shall submit a written request to the architect/engineer before proceeding with any changes, substitutions, or modifications. Any work done by the contractor before receiving written approval will be at the contractor's risk. These contract documents note and describe potential bid alternate details that may be requested from and approved by the Engineer of Record during the bidding and negotiation phase. The contractor may also submit to the architect/engineer for approval other substitutions or modifications to the design drawings as bid alternates during the bidding and negotiation phase. Any contractor proposed substitutions/modifications to the design drawings after project award shall be submitted in writing to the Architect/Engineer for review, together with any additional costs projected from the proposed substitution/modification. Field modifications to structural elements are not permitted without notification and approval by the Engineer of Record.
8. The contractor shall coordinate with all trades any items that are to be integrated into the structural system such as openings, penetrations, mechanical and electrical equipment, etc. Structural drawings do not show all openings. Refer to other discipline drawings. Sizes and locations of mechanical and other equipment that differs from those shown on the contract drawings shall be reported to the architect/engineer. Contractor shall take measures as required to insure that construction loads shall not exceed design loads for the structure.
9. Any structural items shown on other discipline's drawings that are not shown on the structural drawings, but that are noted as "refer to structural drawings" for additional information, shall be brought to the attention of the structural engineer by the contractor.
10. Items such as fireproofing, waterproofing, insulation, vapor barrier, etc, may be shown or noted on structural drawings for reference only. Refer to the architectural drawings or specifications for more information.
11. The contractor shall be responsible for means, methods, techniques, sequences, and procedures in order to comply with the contract drawings and specifications. The contractor shall provide adequate shoring and bracing as required for the chosen method of erection. Shoring and bracing shall remain in place until final connections for the permanent members are completed. The building shall not be considered stable until all connections are completed. Walls shall not be considered self-supporting and shall be braced until the floor/roof system is completed.
12. Site observations by a field representative of Dunn Associates, Inc. shall not be construed as approval of construction, the procedures, nor special inspection.
13. All work shall be done in accordance with OSHA requirements. Potential conflicts between these documents and OSHA requirements shall be brought to the attention of the structural engineer before proceeding with the work.
14. Shop Drawings and submittals:
    A. Shop drawings include plans, details, calculations and/or other relevant design information. Review of shop drawings and submittals by Dunn Associates, Inc. is for general compliance only and is not intended for approval. The shop drawing review shall not relieve the contractor from the responsibility of completing the project accorting to the contract documents.
    B. Submittals for the following items shall be submitted to the Project Architect/Engineer for review prior to fabrication and/or installation:
        1. Anchorage and Embeds
        2. Structural Steel
    C. Quality control submittals shall be submitted to special inspector for review prior to fabrication/installation. Courtesy copies shall be provided to the project architect and engineer for their records.
    D. Detailing and shop drawing production for structural elements will require information (including dimensions) contained in the architectural, structural and/or other consultants' drawings. The structural drawings shall be used in conjunction with the architectural and other consultant's drawings. See the Architectural Drawings for dimensions, doors, windows, non-bearing interior and exterior walls, elevations, slopes, stairs, curbs, drains, recesses, depressions, railings, waterproofing, finishes, chamfers, kerfs, etc.
    E. Shop drawings made from reproductions of the structural drawings will be rejected unless the contractor signs a release agreement prior to the shop drawings being reviewed. The contractor may also obtain electronic files of the plan sheets after signing a release agreement. Electronic files of the detail sheets and schedule sheets will not be made available.
    F. The Contractor may choose to submit shop drawings and submittals for review electronically.

BASIS OF DESIGN

1. Governing Building Code---------- International Building Code 2021
2. Risk Category---------- III
3. Wind Design Criteria
    A. Basic Wind Design Speed ---------- V = 109 mph (Vasd = 0.78V)
    B. Wind Exposure---------- C
    C. Internal Pressure Coefficient---------- ± 0.18
    D. Components and Cladding---------- See note 4 below
4. Wind Loads on Components and Cladding based on ASCE 7 Chapter 30, parts 1 -5 are shown below at service level (0.6W). Dimension 'a' = 8.0 feet. For appurtances, parapets, roof top equipment, etc, designer to use parts 6-7 with qh = 12 psf (0.6W).

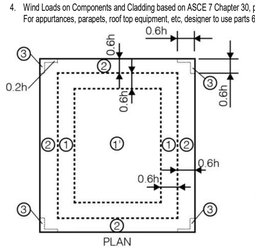

Figure 30.3-2A

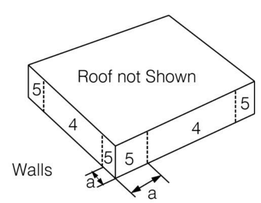

Figure 30.3-1

Roof Pressure Diagram (Zones 1-3, including overhangs 'OH' where applicable) and Wall Pressure Diagram (Zones 4-5)

Wind Pressure Summary for C&C Zones based Upon Areas Ch 30 Pt 1-5 (Table 1 of 2)
All wind pressures include a load factor of 0.6

Z one	Figure	A <= 10.00 ft² psf	A = 20.00 ft² psf	A = 50.00 ft² psf	A = 100.00 ft² psf
4	F:30.3-1*	12.98 -14.06	12.40 -13.48	11.64 -12.72	11.07 -12.15
5	F:30.3-1*	12.98 -17.30	12.40 -16.15	11.64 -14.63	11.07 -13.48

Wind Pressure Summary for C&C Zones based Upon Areas Ch 30 Pt 1-5 (Table 2 of 2)
All wind pressures include a load factor of 0.6

Z one	Figure	A = 200.00 ft² psf	A = 500.00 ft² psf	A = 1000.00 ft² psf
4	F:30.3-1*	10.49 -11.57	9.73 -10.82	9.73 -10.82
5	F:30.3-1*	10.49 -12.33	9.73 -10.82	9.73 -10.82

STRUCTURAL STEEL

1. Codes and Standards: Fabrication, Erection and Quality Control of structural steel shall comply with the latest edition of the following:
    A. American Institute of Steel Construction (AISC) 360, "Specification for Structural Steel Buildings," with "Commentary".
    B. AISC 341 "Seismic Provisions for Structural Steel Buildings."
    C. AISC 303 "Code of Standard Practice" excluding sections 3.4, 4.4 and 4.4.1.
    D. AISC "Specification for Structural Joints Using High Strength Bolts"
    E. American Welding Society (AWS), Structural Welding Codes D1.1, D1.3, D1.4, and D1.8, except as modified by the "Steel Construction Manual".
2. Material:
    A. Plate
        1. Typical---------- ASTM A36
    B. Hollow Structural Shapes
        1. Rectangular---------- ASTM A500 Grade C (50 ksi)
        2. Round---------- ASTM A500 Grade C (46 ksi)
    C. Other Structural Shapes (M, C, etc), Threaded Rod--- ASTM A36
    D. Bolted Connections---------- ASTM F3125 Grade A325 with ASTM A563 heavy hex nuts and ASTM F436 washers.
    E. Anchor Bolts
        1. All Columns unless noted otherwise: ASTM F1554 Grade 105 with ASTM A563 heavy hex nuts. Nuts to be snug tight.
    F. Weld Filler Metal
        1. Shielded Metal Arc Welding---------- AWS A5.1, low-hydrogen only
            Low-hydrogen restrictions do not apply when welding sheet steels in accordance with AWS D1.3, including attaching these steels to structural members.
        2. Gas-Metal & Metal-Cored Arc Welding---------- AWS A5.18
        3. Flux-Cored Arc Welding---------- AWS A5.20
            E7XT-4 or E7XT-11 electrodes are not permitted.
        4. Intermixing of welds made from self-shielded welding electrodes with welds made by other processes is not allowed in seismic critical welds, unless tested in accordance with AWS D1.8, annex B. The Field Erection Contractor is responsible for verifying that intermixing of self-shielded weld metal with weld metal of other processes will not occur, or alternatively, the welding procedure is qualified by testing.
    G. Headed Stud Anchors (HSA)---------- ASTM A108
    H. Refer to architectural drawings for structural steel fireproofing or architecturally exposed steel requirements.
    I. All steel, connectors and embeds exposed to weather shall be galvanized, unless noted otherwise.
3. Structural Detailing
    A. Welds may be performed in the shop or the field. Designations of field welds on the Contract Documents are shown where it is anticipated field welds may be required, and are shown only for the purpose of assisting the Contractor in the bidding process. The Contractor shall coordinate the welding sequence between sub-contractors, and any costs associated with variations in the welding sequence are outside the scope of the Design Engineer, and are the responsibility of the Contractor. Field welding is to be minimized where possible. Contractor is to verify that the sequencing of welds meets all safety regulations, and the requirements of the Construction Documents and their referenced codes. Welding in the 'k' region of wide flange members is prohibited unless noted otherwise.
    B. Bolting and Fasteners
        1. Ordinary steel-to-steel connections, simple span framing, and beam/girder-to-bearing plates are the standard connection used throughout the design drawings, unless noted otherwise:
            a. Use A325N bolts or tension-controlled bolts.
            b. Tighten these fasteners to a "snug tight" condition.
            c. Where a steel-to-steel connection is not shown, provide a framed connection per AISC for one half the total uniform load capacity of the beam for the span and steel specified.
        2. Pretensioned connections are shown on the structural design drawings. They join steel-to-steel connections, unless noted otherwise:
            a. Use A325N or A325X bolts or tension-controlled bolts.
            b. Pretension these fasteners as required by AISC "Specification for Structural Joints Using ASTM A325 or a A490 bolts."
        3. Slip Critical connections (SC) are shown on the structural design drawings. They join steel-to-steel connections in Seismic Load-Resisting Systems (SLRS).
        4. Fasteners and washers shall not be reused. Scrap dirty, rusted, or water-contaminated bolt assemblies.
        5. All holes for bolts are to be standard AISC holes unless noted otherwise.
    C. All welds not noted on drawings shall be minimum 1/4" fillet welds.
    D. All structural steel members shall be considered as an unrestrained fire-resistance-rated assembly.

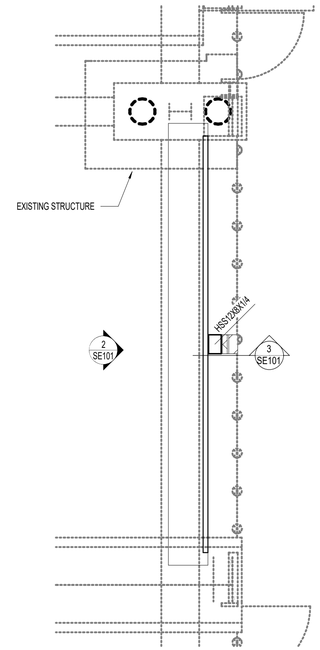

NORTH

1 SE101 FOOTING AND FOUNDATION PLAN
SCALE: 1/4" = 1'-0"

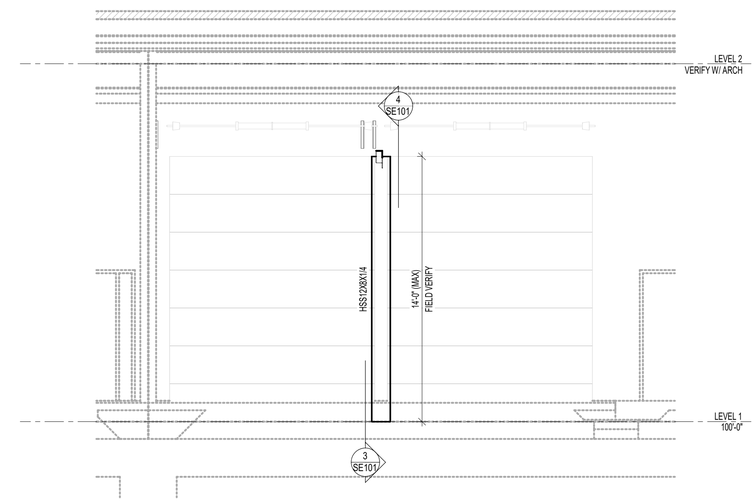

2 SE101 WALL ELEVATION
SCALE: 1/4" = 1'-0"

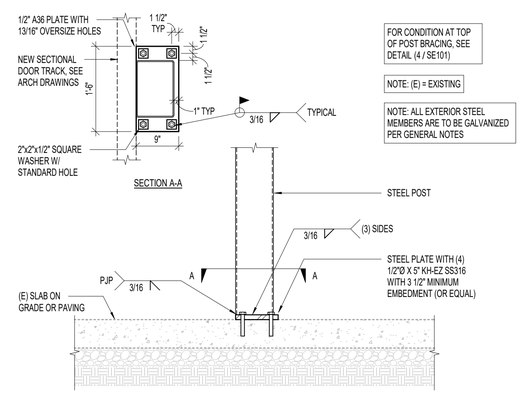

3 SE101 TYPICAL COLUMN TO SLAB DETAIL
NO SCALE:

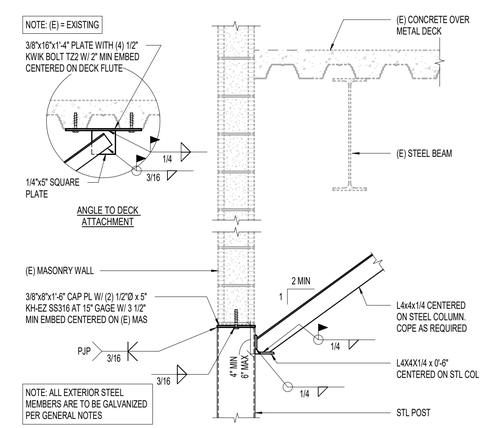

4 SE101 TYPICAL COLUMN TO MASONRY WALL DETAIL
NO SCALE:

GSBS ARCHITECTS

DUNN ASSOCIATES, INC
Consulting Structural Engineers
WWW.DUNN-SE.COM
PH: 801-575-8677

PROFESSIONAL STRUCTURAL ENGINEER
TYLER A. WRIGHT
11/17/2025
187947
STATE OF UTAH

REVISIONS

NO.	DATE	REMARKS	BY	APV

DESIGNED	MB	November 17, 2025 DATE
DRAWN	MB	November 17, 2025 DATE
CHECKED	JD	November 17, 2025 DATE
APPROVED	Approver	
DATE	November 17, 2025	

SLC DEPARTMENT OF AIRPORTS

ENGINEERING DIVISION
SALT LAKE CITY
DEPARTMENT OF AIRPORTS
P.O. BOX 145550
SALT LAKE CITY, UT 84114-5550
PROJECT ADDRESS:
3851 WEST 1200 NORTH

SALT LAKE CITY INTERNATIONAL AIRPORT
SLCDA DOCK 3 DOOR REPLACEMENT

CONSTRUCTION DOCUMENTS
PLANS, NOTES AND DETAILS

SE101
SHEET: OF

GENERAL PLAN SYMBOLS

- PLAN REVISION NUMBER
- DETAIL NUMBER ON SHEET
- SHEET NUMBER WHERE DETAIL IS PLACED
- KEYNOTE SYMBOL
- CONTINUATION SYMBOL
- POINT WHERE NEW CONNECTS TO EXISTING
- POINT WHERE EXISTING IS TO BE DEMOLISHED
- Room 1 — ROOM NAME / NUMBER

* NOTE *

ALL OF GENERAL NOTES ON THIS SHEET ARE TO BE APPLIED TO ALL OTHER DRAWINGS IN THIS SET.THE SYMBOLS AND ABBREVIATIONS SHOWN ON THIS SHEET MAY OR MAY NOT BE USED IN THIS SET OF DRAWINGS.

MECHANICAL PIPING SYMBOLS

2"	NOMINAL PIPE SIZE
	ABOVE GROUND PIPING
	BELOW GROUND PIPING
1/8" / 12" SLOPE	PIPE SLOPE (WHEN APPLICABLE)
(E)	EXISTING PIPE TO REMAIN
	PIPE TO BE DEMOLISHED
HWR	HOT-WATER RETURN
HWS	HOT-WATER SUPPLY
	PIPE RISE / DROP

FIRE PROTECTION GENERAL NOTES

1 NO FIRE PROTECTION LINE SHALL BE DESIGNED OR INSTALLED PRIOR TO CLOSE COORDINATION WITH ALL OTHER DISCIPLINES. DUCTWORK, MECHANICAL PIPING AND PLUMBING TAKE SPACE PRECEDENCE OVER FIRE PROTECTION REMOVAL AND REINSTALLATION AT THE FIRE PROTECTION CONTRACTOR'S EXPENSE.

2 ALL WORK DONE SHALL BE PERFORMED WITH WATER CONTROL IN MIND. CONTAINMENT OF WATER IS NECESSARY TO PREVENT WATER FROM DAMAGING SURROUNDING AREA.

3 THE DESIGN OF THIS FIRE SPRINKLER SYSTEM SHALL BE SUBMITTED TO THE ENGINEER OF RECORD FOR REVIEW PRIOR TO SUBMISSION TO THE AHJ.

4 COORDINATE EXACT LOCATION OF PIPING WITH STRUCTURAL MEMBERS, LIGHTS, REFLECTED CEILING PLANS, CABLE TRAY, ELECTRICAL CONDUITS, DUCTWORK, MECHANICAL AND PLUMBING PIPING, AND ALL OTHER TRADES AND ALL EXISTING CONDITIONS.

5 FIRE SUPPRESSION CONTRACTOR SHALL BE RESPONSIBLE TO REMOVE AND/OR REROUTE ANY AND ALL FIRE PROTECTION PIPING, VALVING, SUPPORTS OR SYSTEMS, OTHERWISE WITHIN THE FIRE SUPPRESSION DISCIPLINE REGARDLESS OF WHO INSTALLED THEM OR WHEN THEY WERE INSTALLED, IN ORDER TO ACCOMMODATE MECHANICAL, PLUMBING, ELECTRICAL OR OTHER SYSTEMS. COORDINATE WORK WITH MECHANICAL, ELECTRICAL, PLUMBING OR OTHER CONTRACTORS UNTIL SUBSTANTIAL COMPLETION OF PROJECT.

6 PROVIDE ALTERATIONS TO THE EXISTING FIRE PROTECTION SYSTEM AS REQUIRED TO ACCOMMODATE THE NEW FLOOR PLAN AND NEW CEILING TYPES. PROVIDE A COMPLETE WET TYPE SYSTEM INCLUDING NEW MAINS, BRANCHES, HEADS, VALVES, AND ACCESSORIES AS REQUIRED. REUSE EXISTING SYSTEM EQUIPMENT WHERE APPLICABLE. THE SYSTEM SHALL BE INSTALLED ACCORDING TO MANUFACTURER'S SPECIFICATIONS AND RECOMMENDATIONS AND AS PER REQUIREMENTS OF THE STATE BUILDING CODE, LOCAL FIRE DEPARTMENT, AND ALL FEDERAL, STATE, AND LOCAL AUTHORITIES, NFPA, AND FACTORY MUTUAL.

7 THE BUILDINGS COMPLETE OPERATIONAL FIRE PROTECTION SYSTEMS SHALL REMAIN IN PLACE. THIS CONTRACTOR SHALL REPAIR ANY DAMAGE TO THIS SYSTEM CREATED BY THE REMOVAL OF ANY OTHER MECHANICAL SYSTEMS OR COMPONENTS.

8 THIS CONTRACTOR SHALL COORDINATE PHASING OF SPRINKLER WORK WITH THE GENERAL CONTRACTOR PRIOR TO STARTING WORK.

9 PROVIDE A COMPLETE WET TYPE FIRE PROTECTION SYSTEM AS REQUIRED TO ACCOMMODATE THE FLOOR PLAN AND CEILING TYPES INCLUDING MAINS, BRANCHES, HEADS, VALVES, AND ACCESSORIES AS REQUIRED. THE SYSTEM SHALL BE INSTALLED ACCORDING TO MANUFACTURER'S SPECIFICATIONS AND RECOMMENDATIONS OF THE STATE BUILDING CODE, LOCAL FIRE DEPARTMENT, AND ALL FEDERAL, STATE, AND LOCAL AUTHORITIES, NFPA, AND FACTORY MUTUAL.

10 THE SPRINKLER SYSTEM SHALL BE DESIGNED BASED UPON ACTUAL WATER FLOW TEST DATA OBTAINED AT OR NEAR THE JOB SITE.

11 REFER TO REFLECTED CEILING PLANS FOR ADDITIONAL INFORMATION REGARDING SPRINKLER HEAD LOCATION AND PIPE, UNLESS NOTED OTHERWISE.

12 DIVISION 21 CONTRACTOR SHALL COORDINATE WITH THE ELECTRICAL CONTRACTOR FOR PROPER INSTALLATION OF THE FIRE PROTECTION SYSTEMS ALARM DEVICES INVOLVED WITH FIRE SPRINKLER SYSTEM.

13 THIS CONTRACTOR SHALL PROVIDE ALL ADDITIONAL SPRINKLER HEADS AS REQUIRED TO ENSURE AN APPROVED FIRE PROTECTION SYSTEM AT NO ADDITIONAL COST TO THE OWNER.

14 AUXILIARY DRAINS SHALL BE EXPOSED WITH 1" DRAIN VALVES. WHEN 5 OR MORE GALLONS ARE TRAPPED, THIS CONTRACTOR SHALL PROVIDE FIXED PIPING TO AN ADEQUATELY SIZED RECEPTOR WHICH IS CAPABLE OF ACCEPTING THE FULL FLOW OF THE DRAIN. WHEN LESS THAN 5 GALLONS ARE TRAPPED, A HOSE BIB SHALL BE PROVIDED AT THE DRAIN VALVE.

15 AUXILIARY DRAINS SHALL NOT BE LOCATED ABOVE PLASTER OR GYPSUM BOARD CEILING SYSTEMS. ONLY BY A SPECIFIC WRITTEN INSTRUCTION FROM THE ENGINEER WILL A VARIANCE BE PROVIDED.

16 AN INSPECTOR'S TEST CONNECTION SHALL BE FOR EACH FIRE SPRINKLER ZONE. THIS CONTRACTOR SHALL PROVIDE FIXED PIPING FROM THE TEST CONNECTION TO AN ADEQUATELY SIZED RECEPTOR WHICH IS CAPABLE OF ACCEPTING THE FULL FLOW OF THE TEST. (EXTERIOR DISCHARGE OF THE TEST CONNECTION SHALL BE PERMITTED ONLY BY SPECIFIC WRITTEN INSTRUCTION FROM THE ENGINEER.)

17 SHOW ALL ROOM NUMBERS ON SHOP DRAWING PLANS.

18 ROUTE SPRINKLER PIPING SUCH THAT IT DOES NOT RUN ABOVE ELECTRICAL PANELS, SWITCHGEAR, OR SIMILAR EQUIPMENT. SPRINKLER MAINS SHALL NOT RUN THROUGH ELECTRICAL OR COMMUNICATION ROOMS. SPRINKLER HEADS IN THESE ROOMS SHALL BE SERVED BY A DEDICATED BRANCH LINE FOR EACH ROOM. BRANCH LINE TO ENTER ROOM ABOVE DOOR.

19 THIS DRAWING INDICATES A GENERAL PIPING ARRANGEMENT AND SUGGESTED SIZING ONLY. THIS CONTRACTOR SHALL DETERMINE THE ACTUAL PIPE SIZING REQUIRED AND COORDINATE WORK WITH ALL OTHER TRADES TO AVOID CONFLICTS.

20 THE DESIGN OF FIRE SPRINKLER SYSTEM, INCLUDING ALL OF ITS PIPE LAYOUT, SPRINKLER LAYOUT, FITTINGS, CONNECTIONS, VALVES, HANGING & BRACING, ANCHORS, ATTACHMENTS, AND ALARM INTERCONNECTION POINTS ARE HEREBY DELEGATED TO THE CONTRACTOR.

PROJECT REQUIREMENTS

1 REMOVE ALL UNUSED PIPING, DUCTWORK, EQUIPMENT, AND ACCESSORIES.

2 THE MECHANICAL CONTRACTOR SHALL BE RESPONSIBLE FOR FIELD VERIFYING ALL EXISTING CONDITIONS FOR PLUMBING AND MECHANICAL SYSTEMS WITHIN THE SCOPE OF WORK SPACE AND WITHIN CLOSE PROXIMITY TO THE SCOPE OF WORK SPACE. THE CONTRACTOR WILL FIELD VERIFY AS MUCH AS IS REASONABLE BEFORE THE FINAL BID. AFTER THE FINAL BID THE CONTRACTOR WILL NOTIFY THE OWNER, ARCHITECT, AND MECHANICAL DESIGN ENGINEER IMMEDIATELY UPON DISCOVERY OF EXISTING CONDITIONS THAT MAY AFFECT THE DESIGN.

3 THE MECHANICAL CONTRACTOR SHALL PERFORM SERVICE AND REPAIR ON THE EXISTING EQUIPMENT AND ITS ACCESSORIES AS FOLLOWS: CLEAN ALL COILS, REPLACE THE FILTERS AND BELTS, INSPECT, REPAIR, OR REPLACE THE ECONOMIZERS, DRIVERS AND FAN BEARINGS, MOTORS, CONTROL COMPONENTS, VALVES, AND ANY OTHER ITEM NECESSARY FOR A COMPLETE AND PROPER OPERATING SYSTEM. THIS CONTRACTOR SHALL ALSO VISIT THE SITE, PRIOR TO FINAL BIDDING, AND VERIFY ALL EXISTING SITE CONDITIONS. PROVIDE ALL MATERIAL AND COMPONENTS AS NEEDED TO BRING THE UNITS TO FULL COMPLIANCE OF THE OWNER'S CRITERIA AND LOCAL AUTHORITY HAVING JURISDICTION.

4 COORDINATE INSTALLATION OF PIPING, DUCTWORK, CONDUIT, LIGHTS, CABLE TRAY, STRUCTURE, EQUIPMENT, CEILINGS, ARCHITECTURAL COMPONENTS, AND ANYTHING ELSE PERTAINING TO THE PROJECT TO PREVENT CONFLICTS.

5 THE CONTRACTOR SHALL BE FAMILIAR WITH ALL THE CONDITIONS BOTH EXISTING AND THOSE ILLUSTRATED BY THESE DOCUMENTS AND THOSE OF OTHER DISCIPLINES, INCLUDING, BUT NOT LIMITED TO ARCHITECTURAL, CIVIL, ELECTRICAL, VENTILATION, PLUMBING, AND OTHER SYSTEMS INVOLVED ON THIS PROJECT.

6 FINAL PRODUCT SHALL BE A COMPLETE AND FUNCTIONING SYSTEM, AND SHALL CONFORM TO ALL REQUIREMENTS OF APPLICABLE FEDERAL, STATE, AND LOCAL CODES, INCLUDING BUT NOT LIMITED TO THE INTERNATIONAL BUILDING CODE, INTERNATIONAL MECHANICAL CODE, AND INTERNATIONAL PLUMBING CODE.

7 COORDINATE INSTALLATION OF DUCTWORK, PIPING AND MECHANICAL EQUIPMENT WITH NEC CLEARANCES INCLUDING THE SPACE ABOVE ELECTRICAL PANELS, TRANSFORMERS AND OTHER ELECTRICAL EQUIPMENT. NO PIPING OR DUCTWORK TO RUN OVER ELECTRICAL PANELS, VFD'S OR MCC'S. PROTECT EQUIPMENT WITH A 42" DEEP ZONE IN FRONT OF PANELS, VFD'S AND MCC'S. PROVIDE PANS IF REQUIRED UNDER PIPING.

8 TRANSITION PIPING AND DUCTWORK SIZES TO MATCH THE SIZE OF EQUIPMENT CONNECTION.

9 ALL PIPE AND DUCT SIZES SHOWN SHALL BE CONTINUED IN THE DIRECTION OF FLOW UNTIL ANOTHER SIZE IS SHOWN.

10 FOR DETAILS, EQUIPMENT CONNECTIONS, AND PIPE SIZES NOT SHOWN ON THE SEGMENTS, REFER TO DETAILS, SCHEDULES, AND SPECIFICATIONS.

11 INSTALL ALL EQUIPMENT IN ACCORDANCE WITH THE RESPECTIVE MANUFACTURER'S WRITTEN INSTALLATION INSTRUCTIONS, AT A LEVEL OF WORKMANSHIP CONSISTENT WITH THE SPECIFICATIONS.

12 MECHANICAL CONTRACTOR SHALL ENSURE THAT ALL EQUIPMENT IS PROVIDED AND INSTALLED WITH CLEARANCES PER MANUFACTURERS RECOMMENDATIONS. THE CONTRACTOR SHALL MAINTAIN PROPER SERVICE SPACE FOR COIL PULLS, BAS DEVICES, MAINTENANCE ACCESS, ETC.

13 INSTALL EXPOSED PIPING AND DUCTWORK AS HIGH AS PRACTICAL IN ROOMS WITHOUT CEILINGS.

14 LOCATIONS OF PIPING, DUCTWORK AND EQUIPMENT, AS INDICATED ON THE DRAWING, ARE APPROXIMATE AND SUBJECT TO MINOR ADJUSTMENTS IN THE FIELD, INCLUDING, BUT NOT LIMITED TO, OFFSETS AND TRANSITIONS. NEW DUCTWORK, PIPING AND EQUIPMENT SHALL BE COORDINATED WITH STRUCTURE, LIGHTS, REFLECTED CEILING PLANS, CABLE TRAY, ELECTRICAL CONDUIT, PLUMBING, MECHANICAL AND FIRE PROTECTION PIPING, MEDICAL GASES, ALL OTHER TRADES AND ALL OTHER EXISTING CONDITIONS TO AVOID INTERFERENCE IN THE FIELD..

15 THE CONTRACTOR SHALL INFORM THE DESIGNER OF ANY PROPOSED DEVIATIONS FROM THE CONTRACT DOCUMENTS.

16 IF CONTRACTOR ENCOUNTERS MATERIAL WHICH MAY CONTAIN ASBESTOS, IMMEDIATELY STOP WORK IN THIS AREA AND NOTIFY THE OWNER.

17 INSTALL ALL PIPING AND DUCTWORK WITHOUT FORCING OR SPRINGING.

18 FOLLOWING REMOVAL OR BASE CONTROLLER FLN NETWORK NEEDS TO BE VERIFIED. COORDINATE WITH AIRPORT BAS GROUP THAT ALL DEVICES ARE STILL COMMUNICATING.

19 FOLLOWING RELOCATION OF BAS CONTROLLER AND RE-CONNECTING TO BAS NETWORK. VERIFY CONTROLLER AND OTHER BAS DEVICES ARE COMMUNICATING. COORDINATE WITH AIRPORT BAS GROUP THAT ALL DEVICES ARE COMMUNICATING PROPERLY.

PROJECT SCOPE

BUILDING AUTOMATION SYSTEM (BAS) EXISTING COMPONENTS SHALL BE REMOVED AND RE-INSTALLED BY CONTRACTOR.

BAS CONTROLLER SHALL BE RE-LOCATED AND FLN AND OTHER BAS WIRING EXTENDED TO NEW LOCATION. COORDINATION WITH AIRPORT BAS GROUP WHEN RE-CONNECTING BAS CONTROLLER.

BAS FLN NETWORK WILL NEED TO BE MAINTAINED DURING PROJECT AND FLN NETWORK VERIFIED FOLLOWING COMPLETION.

GSBS ARCHITECTS
RESOLUT
181 E 5600 S, Murray, UT 84107 | (801) 530-3148 | info@resolutgroup.com | resolutgroup.com

LICENSED PROFESSIONAL ENGINEER
No. 4775391-2202
SPENCER W. HOWELL
11/17/2025
STATE OF UTAH

REVISIONS

NO.	DATE	REMARKS	BY	APV

DESIGNED	SK	11/17/2025
DRAWN	SK	11/17/2025
CHECKED	MJ	11/17/2025
APPROVED	SH	
DATE	11/17/2025	

SLC DEPARTMENT OF AIRPORTS

ENGINEERING DIVISION
SALT LAKE CITY
DEPARTMENT OF AIRPORTS
P.O. BOX 145550
SALT LAKE CITY, UT 84114-5550
PROJECT ADDRESS:
3851 WEST 1200 NORTH

SALT LAKE CITY INTERNATIONAL AIRPORT
SLCIA Dock 3

CONSTRUCTION DOCUMENTS
MECHANICAL SYMBOLS & LEGENDS

PROJECT 250642

M001

SHEET: OF

KEYNOTES

1. REMOVE AND STORE UNIT HEATER,ASSOCIATED POWER, CONTROLS, AND SPECIALTIES, ETC FOR RELOCATION.
2. REMOVE HEATING WATER PIPING TO POINT INDICATED. CAP AND PROTECT EXISTING PIPING FOR CONNECTION TO NEW WORK.
3. CONTRACTOR TO VERIFY NEW UNIT HEATER LOCATION IS OUT OF GARAGE DOOR CLEARANCE AREA.
4. RELOCATE UNIT HEATER AND ASSOCIATED POWER, CONTROLS, AND SPECIALTIES TO POINT INDICATED.
5. CONTRACTOR TO BALANCE SYSTEM BEFORE STARTING NEW WORK AND AFTER NEW WORK IS COMPLETE.
6. DISCONNECT UNIT HEATER BAS CONTROLLER FROM AIRPORT BAS SYSTEM. VERIFY THE FLN NETWORK IS COMMUNICATING FOLLOWING THE REMOVAL OF THE CONTROLLER. SALVAGE SWITCH AND BASE CONTROLLER FOR RE-USE.
7. RELOCATE BAS CONTROLLER. VERIFY THAT CONTROLLER IS COMMUNICATING PROPERLY AND OTHER FLN DEVICES DOWNSTREAM ARE WORKING PROPERLY.
8. CONTRACTOR TO LOCATE NEAREST SHUT-OFF VALVE TO ISOLATE BRANCH PIPING. IF ONE IS NOT FOUND, CONTRACTOR SHALL ADD ONE IN ACCESSIBLE LOCATION. COORDINATE WITH ARCHITECT AND OWNER.

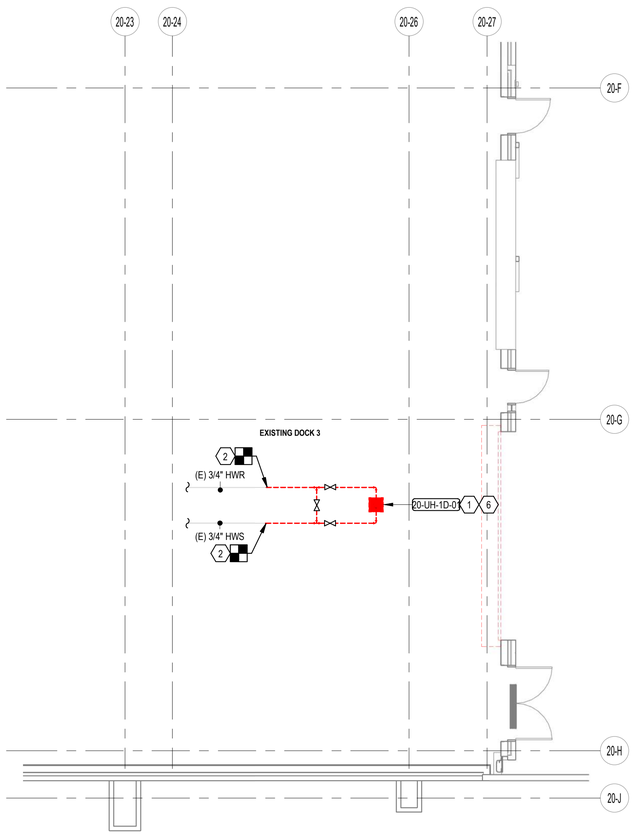

2 MECHANICAL REMOVAL PLAN
1/8" = 1'-0"

NORTH
0 4' 8' 16'

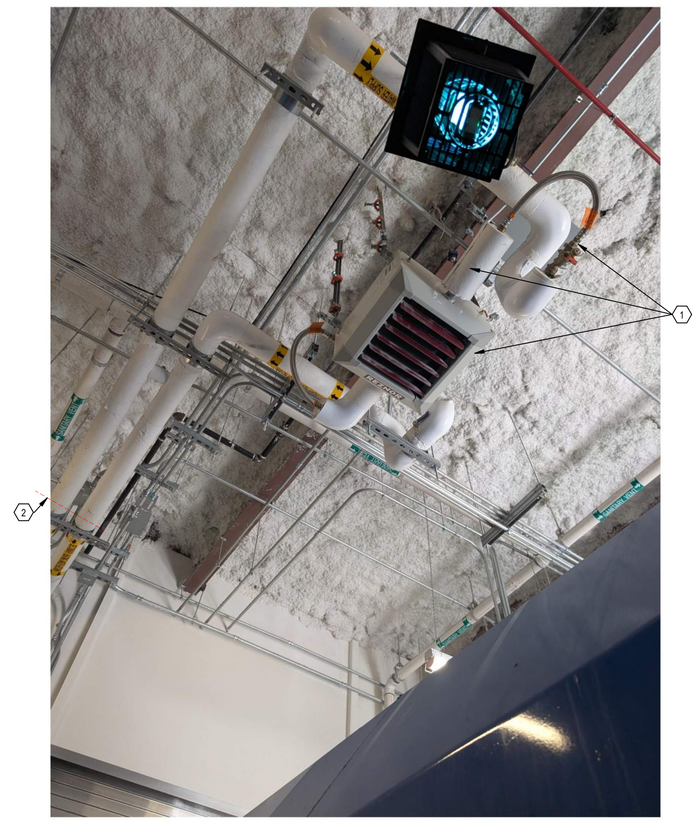

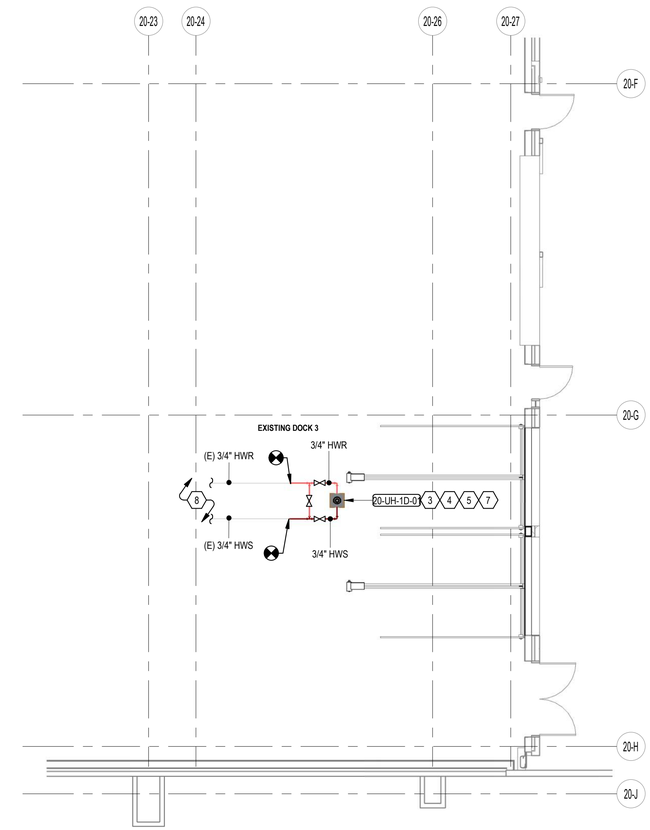

1 MECHANICAL PLAN
1/8" = 1'-0"

NORTH
0 4' 8' 16'

GSBS ARCHITECTS

RESOLUT
181 E 5600 S, Murray, UT 84107 | (801) 530-3148 | info@resolutgroup.com | resolutgroup.com

LICENSED PROFESSIONAL ENGINEER
No. 4775391-2202
SPENCER W. HOWELL
11/17/2025
STATE OF UTAH

REVISIONS

NO.	DATE	REMARKS	BY	APV

DESIGNED	SK	11/17/2025
DRAWN	SK	11/17/2025
CHECKED	MJ	11/17/2025
APPROVED	SH	
DATE	11/17/2025	

SLC DEPARTMENT OF AIRPORTS

ENGINEERING DIVISION
SALT LAKE CITY
DEPARTMENT OF AIRPORTS
P.O. BOX 145550
SALT LAKE CITY, UT 84114-5550
PROJECT ADDRESS:
3851 WEST 1200 NORTH

SALT LAKE CITY INTERNATIONAL AIRPORT
SLCIA Dock 3

CONSTRUCTION DOCUMENTS
MECHANICAL PLANS

PROJECT 250642

MH101

SHEET: OF

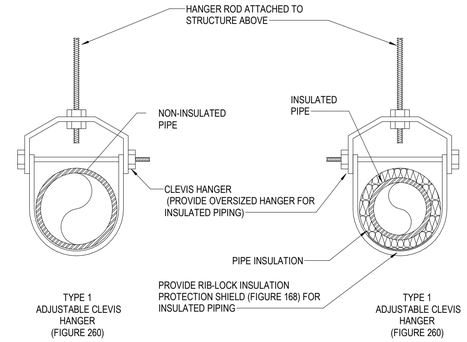

NOTE:
FIGURE NUMBERS ARE TYPICAL TO GRINNELL SUPPORT NUMBERS.

3 / MH501 SINGLE PIPE CLEVIS HANGER
NOT TO SCALE

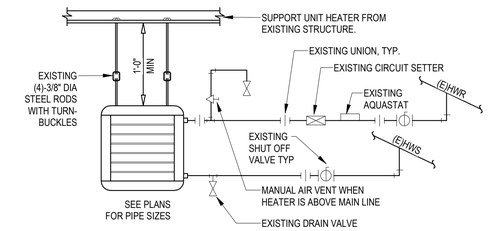

1 / MH501 HOT WATER UNIT HEATER DETAIL
NOT TO SCALE

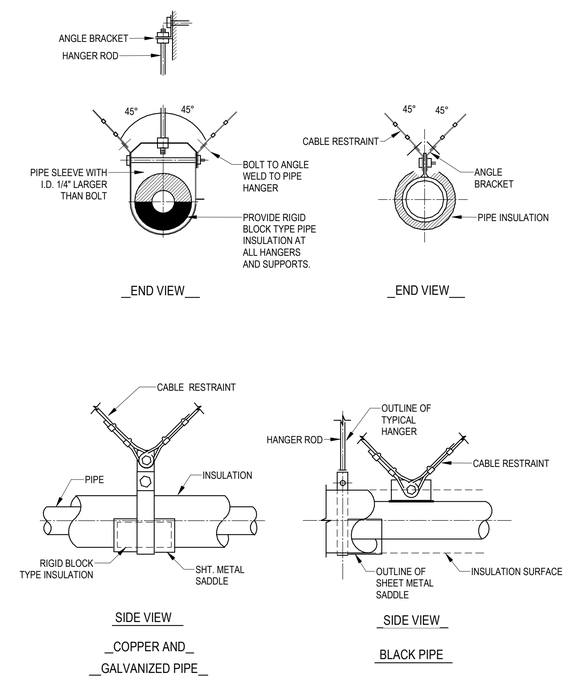

2 / MH501 PIPING RESTRAINT DETAIL
NOT TO SCALE

GSBS ARCHITECTS
RESOLUT
181 E 5600 S, Murray, UT 84107 | (801) 530-3148 | info@resolutgroup.com | resolutgroup.com

LICENSED PROFESSIONAL ENGINEER
No. 4775391-2202
SPENCER W. HOWELL
11/17/2025
STATE OF UTAH

REVISIONS				
NO.	DATE	REMARKS	BY	APV

DESIGNED	SK	11/17/2025
DRAWN	SK	11/17/2025
CHECKED	MJ	11/17/2025
APPROVED	SH	
DATE	11/17/2025	

SLC DEPARTMENT OF AIRPORTS

ENGINEERING DIVISION
SALT LAKE CITY
DEPARTMENT OF AIRPORTS
P.O. BOX 145550
SALT LAKE CITY, UT 84114-5550
PROJECT ADDRESS:
3851 WEST 1200 NORTH

SALT LAKE CITY INTERNATIONAL AIRPORT
SLCIA Dock 3

CONSTRUCTION DOCUMENTS
MECHANICAL DETAILS

PROJECT 250642

MH501

SHEET: OF

KEYNOTES

1. EXISTING FIRE PROTECTION EQUIPMENT TO REMAIN. PROTECT EXISTING PIPE FOR CONNECTION TO NEW WORK.
2. AREA UNDERNEATH OVERHEAD DOOR TO BE PROTECTED BY SIDEWALL SPRINKLERS. FIELD LOCATE AND CONNECT TO EXISTING FIRE LINE. USE EXISTING EQUIPMENT WHERE POSSIBLE.

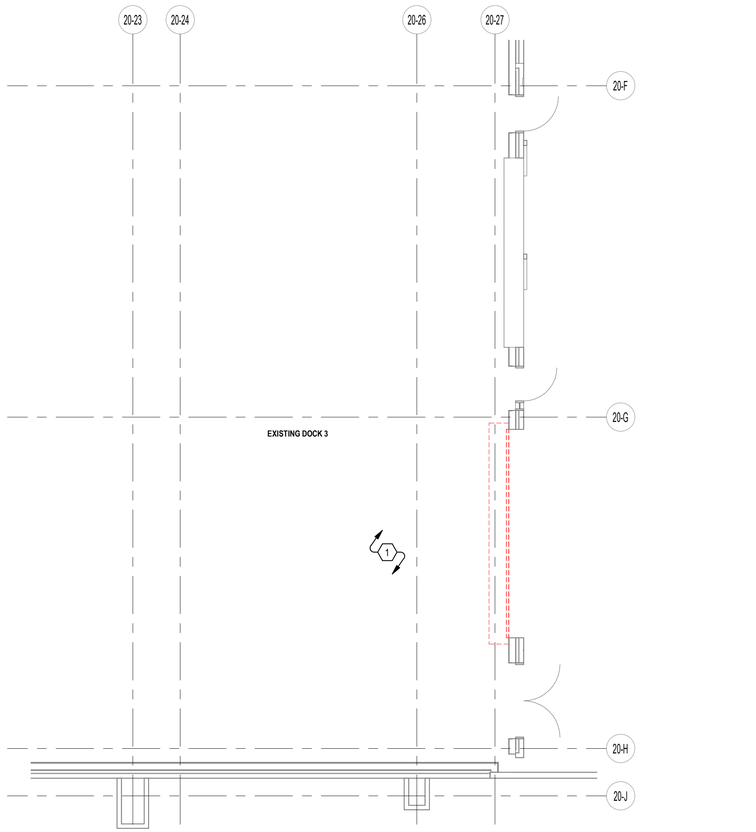

2 FIRE PROTECTION REMOVAL PLAN
1/8" = 1'-0"

NORTH
0 4' 8' 16'

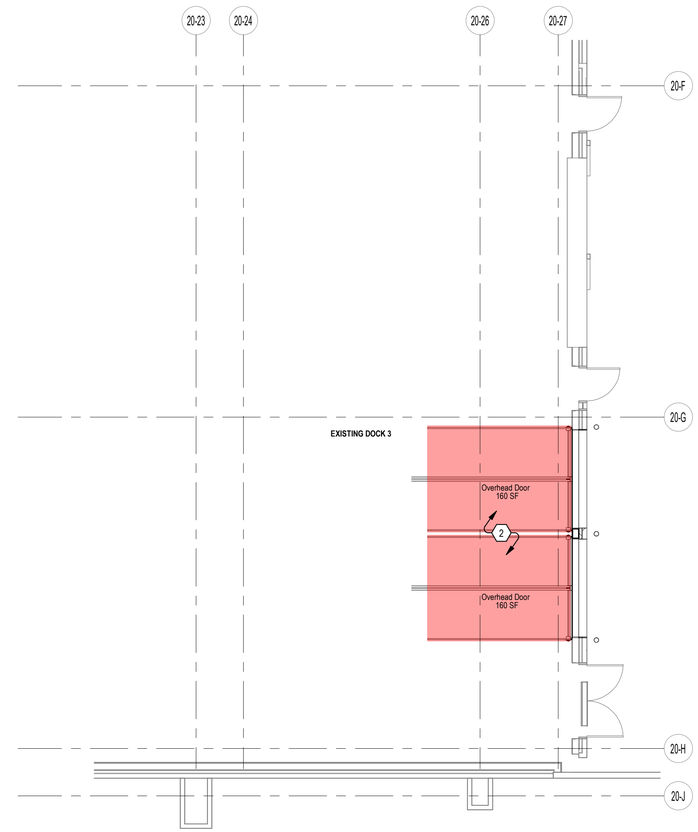

1 FIRE PROTECTION PLAN
1/8" = 1'-0"

NORTH
0 4' 8' 16'

GSBS ARCHITECTS

RESOLUT
181 E 5600 S, Murray, UT 84107 | (801) 530-3148 | info@resolutgroup.com | resolutgroup.com

LICENSED PROFESSIONAL ENGINEER
No. 4775391-2202
SPENCER W. HOWELL
11/17/2025
STATE OF UTAH

REVISIONS

NO.	DATE	REMARKS	BY	APV

DESIGNED	JB	11/17/2025
DRAWN	JB	11/17/2025
CHECKED	ST	11/17/2025
APPROVED	ST	
DATE	11/17/2025	

SLC DEPARTMENT OF AIRPORTS

ENGINEERING DIVISION
SALT LAKE CITY
DEPARTMENT OF AIRPORTS
P.O. BOX 145550
SALT LAKE CITY, UT 84114-5550
PROJECT ADDRESS:
3851 WEST 1200 NORTH

SALT LAKE CITY INTERNATIONAL AIRPORT
SLCIA Dock 3

CONSTRUCTION DOCUMENTS
FIRE PROTECTION PLANS

PROJECT 250642

FP101

SHEET: OF

WIRING DEVICE SYMBOLS

SYMBOL	DESCRIPTION	MOUNTING	REMARKS
	DUPLEX RECEPTACLE	+18"	
	FOURPLEX RECEPTACLE	+18"	
	GROUND FAULT CIRCUIT INTERRUPTER DUPLEX RECEPTACLE	+18"	
	GROUND FAULT CIRCUIT INTERRUPTER FOURPLEX RECEPTACLE	+18"	
	EMERGENCY DUPLEX RECEPTACLE	+18"	
	EMERGENCY FOURPLEX RECEPTACLE	+18"	
(5-20R)	SPECIAL PURPOSE OUTLET	+18"	SUBSCRIPT IN PARENTHESIS INDICATES NEMA CONFIGURATION IF SHOWN. REFER TO DRAWINGS AND/OR EQUIPMENT SCHEDULES. CONFIRM EXACT CONFIGURATION WITH OWNER PRIOR TO INSTALLATION.

ACCESS CONTROL SYMBOLS

SYMBOL	DESCRIPTION	MOUNTING	REMARKS
M	MAGNETIC LOCK	DOOR	
OHD	OVERHEAD DOOR CONTACT	DOOR	
EH	ELECTRIFIED HINGE	DOOR	
PS	POWER SUPPLY	CEILING/WALL	
IL	INTEGRATED LOCK	+46"	
PP	PUSH PLATE FOR AUTOMATIC DOOR OPERATOR	+46"	
ADO	AUTOMATIC DOOR OPERATOR	DOOR	
KP	KEYPAD	+48"	
CR	CARD READER	+48"	

LIGHTING SYMBOLS

1. LIGHT FIXTURE SYMBOLS ARE GENERAL IN NATURE AND MAY BE SHOWN ON THE DRAWINGS IN VARIOUS SIZES AND SHAPES. REFER TO THE LIGHT FIXTURE SCHEDULE FOR SPECIFICATION INFORMATION.
2. ARROWS INDICATE AIMING DIRECTION.

SYMBOL	DESCRIPTION	MOUNTING	REMARKS
	LIGHT FIXTURES	AS SPECIFIED OR DETAILED	
	WALL-MOUNTED LINEAR LIGHT FIXTURE	AS SPECIFIED OR DETAILED	
	LINEAR WALL WASHER	AS SPECIFIED OR DETAILED	
	LINEAR PENDANT LIGHT FIXTURE	CEILING	
	EGRESS LIGHT FIXTURE	AS SPECIFIED OR DETAILED	THIS IS AN EXAMPLE OF AN EGRESS LIGHT FIXTURE. EGRESS LIGHT FIXTURES ARE HALF-SHADED DIAGONALLY
	EMERGENCY (NON-EGRESS) LIGHT FIXTURE	AS SPECIFIED OR DETAILED	THIS IS AN EXAMPLE OF AN EMERGENCY (NON-EGRESS) LIGHT FIXTURE. EMERGENCY FIXTURES ARE FULLY-SHADED.
	CEILING MOUNTED EXIT SIGN	CEILING	DARKENED PORTION OF SIGN INDICATES FACE(S); ARROW(S) INDICATE CHEVRON DIRECTION(S)
	WALL-MOUNTED EXIT SIGN	WALL ABOVE DOOR	
IN	CEILING MOUNTED IN USE SIGN	CEILING	
IN	WALL-MOUNTED IN USE SIGN	WALL ABOVE DOOR	
P	ELECTRIC PHOTOCELL	N/A	MOUNT ON ROOF FACING NORTH SKY
XXXX	LIGHT FIXTURE CALLOUT (LETTER DENOTES FIXTURE TYPE)		

EQUIPMENT AND CONTROL SYMBOLS

SYMBOL	DESCRIPTION	MOUNTING	REMARKS
$T	MANUAL STARTER WITH THERMAL OVERLOAD(S)	AT EQUIPMENT	
	ELECTRIC MOTOR		
	NON-FUSED DISCONNECT SWITCH	+60"	
F	FUSED DISCONNECT SWITCH	+60"	
	CIRCUIT BREAKER AND ENCLOSURE	+60"	
	MAGNETIC STARTER	+60"	
	COMBINATION MAGNETIC STARTER / FUSED DISCONNECT	+60"	
	COMBINATION MAGNETIC STARTER / NON-FUSED DISCONNECT	+60"	
	COMBINATION MAGNETIC STARTER / MOTOR CIRCUIT PROTECTOR (MCP)	+60"	
	LOW-VOLTAGE SYSTEM CONTROL PANEL	TOP AT +72"	SEE FLOOR PLANS AND RISER DIAGRAMS FOR ADDITIONAL INFORMATION.
	LIGHTING AND APPLIANCE PANELBOARD (SURFACE-MOUNTED)	TOP AT +72"	20"W X 6"D
	LIGHTING AND APPLIANCE PANELBOARD (FLUSH-MOUNTED)	TOP AT +72"	20"W X 6"D
	POWER DISTRIBUTION PANELBOARD	WALL OR RACK MOUNTED	THESE SYMBOLS ARE GENERAL IN NATURE AND MAY VARY IN SIZE AND SHAPE TO SUIT APPLICATION. CROSS HATCHING INDICATES "MAIN PANELBOARD OR SWITCHBOARD" NAME IS INDICATED IN SEMI-QUOTES (I.E. 'L2A', 'MDP')
	SWITCHBOARD	PAD MOUNTED	
T-#	DRY TYPE TRANSFORMER	PAD MOUNT	
T-#	DRY TYPE TRANSFORMER	WALL MOUNT	
	OPEN - STOP - CLOSE SWITCH	+60"	FURNISH SWITCH UNLESS FURNISHED BY ANOTHER DIVISION. INSTALL AND CONNECT COMPLETE. REFER TO RELATED SPECIFICATION SECTIONS.

ELECTRONIC SYSTEM GENERAL SYMBOLS

SYMBOL	DESCRIPTION	MOUNTING	REMARKS
PANEL NAME	ELECTRONIC SYSTEM PANELBOARD (SURFACE MOUNT)	TOP AT 72"	ELECTRONIC SYSTEMS MAY INCLUDE BUT ARE NOT SPECIFICALLY LIMITED TO, TELEPHONE, DATA, TELEVISION, LIGHTING CONTROL, CLOCKS, FIRE ALARM, ACCESS CONTROL, SECURITY, CCTV, SOUND SYSTEM, NURSE CALL, OR INTERCOM.
PANEL NAME	ELECTRONIC SYSTEM PANELBOARD (FLUSH MOUNT)	TOP AT 72"	
	ELECTRONIC SYSTEM TERMINAL BOARD	TOP AT 72"	

BRANCH CIRCUITING SYMBOLS

SYMBOL	DESCRIPTION	REMARKS
	BRANCH CIRCUIT HOME RUN TO PANEL	ARROWS: NUMBER OF ARROWS INDICATES NUMBER OF CIRCUITS REQUIRED.
	BRANCH CIRCUITING (U.N.O.) CONTINUATION	
	CONDUIT STUB-IN	CAP AND MARK
	INCOMING SERVICE	
	UNDERGROUND FEEDER	
J	JUNCTION BOX	MOUNT AS NOTED. SUBSCRIPT 'F' INDICATES TO PROVIDE A FLOOR BOX WITH BLANK COVERPLATE.
	BRANCH CIRCUITING (U.N.O.) TURNED UP OR TOWARDS OBSERVER.	
	BRANCH CIRCUITING (U.N.O.) TURNED DOWN OR AWAY FROM OBSERVER.	

TELEPHONE / DATA SYMBOLS

SYMBOL	DESCRIPTION	MOUNTING	REMARKS
	TELEPHONE OUTLET	+18"	
	DATA OUTLET	+18"	
	COMBINATION TELEPHONE/DATA OUTLET	+18"	

ELECTRICAL SYMBOL SCHEDULE GENERAL NOTES

1. MOUNT ALL OUTLETS, DEVICES, AND EQUIPMENT AT HEIGHTS INDICATED BELOW, UNLESS NOTED OTHERWISE ON THE DRAWINGS. UNLESS NOTED OTHERWISE, HEIGHTS ARE GIVEN FROM FINISHED FLOOR TO CENTER OF OUTLET BOX.
2. WHERE OUTLETS, DEVICES, AND EQUIPMENT ARE NOTED BY SUBSCRIPTS, REFER TO ABBREVIATION SCHEDULE FOR DEFINED REQUIREMENTS.
3. WHERE OUTLETS, DEVICES AND EQUIPMENT ARE NOTED BY THE SUBSCRIPT 'A', MOUNT AT 4" ABOVE COUNTER. IF COUNTER HAS A BACK SPLASH, MOUNT AT 4" ABOVE BACK SPLASH. REFER TO ARCHITECTURAL INTERIOR ELEVATIONS AND COORDINATE WITH CASEWORK SUPPLIER.
4. NOT ALL ELECTRICAL SYMBOLS MAY BE USED.

GENERAL SYMBOLS

SYMBOL	DESCRIPTION	REMARKS
XX	KEYED NOTE	
1 E-1	DETAIL REFERENCE	TOP NUMBER INDICATES DETAIL NUMBER; BOTTOM LETTER-NUMBER INDICATES DRAWING SHEET WHERE DETAIL IS SHOWN; WHERE NOT SPECIFICALLY REFERENCED, DETAIL IS GENERAL IN NATURE AND SHALL APPLY WHERE APPLICABLE.
2 E-2	ELEVATION REFERENCE	TOP NUMBER INDICATES ELEVATION NUMBER; BOTTOM LETTER-NUMBER INDICATES WHERE ELEVATION IS SHOWN.
3 E-2	SECTION REFERENCE	TOP NUMBER INDICATES ELEVATION NUMBER; BOTTOM LETTER-NUMBER INDICATES WHERE ELEVATION IS SHOWN.
100	ARCHITECTURAL ROOM NUMBER	
AHU 1	EQUIPMENT NAME / NUMBER	TOP NUMBER ABBREVIATES EQUIPMENT NAME OR TYPE; BOTTOM NUMBER INDICATES EQUIPMENT NUMBER. REFER TO EQUIPMENT SCHEDULE.
1	REVISION NUMBER	USED TO DENOTE CHANGES EITHER ISSUED BY ADDENDUM OR DURING CONSTRUCTION AND TO DENOTE RECORD DRAWING CHANGES.
	REVISION CLOUD	USED TO DENOTE AREAS, DEVICES, EQUIPMENT DETAILS, ETC. AFFECTED BY THE REVISION.

ABBREVIATION SCHEDULE

NOTE: NOT ALL ABBREVIATIONS MAY BE USED.

A	ABOVE COUNTER	LS	LONG-TIME, SHORT-TIME
A	AMP OR AMPS	LSI	LONG-TIME, SHORT-TIME INSTANTANEOUS
ACC	ACCESS CONTROL	LSIG	LONG-TIME, SHORT-TIME INSTANTANEOUS GROUND FAULT
ADJ	ADJACENT	LTG	LIGHTING
AFF	ABOVE FINISHED FLOOR	MBJ	MAIN BONDING JUMPER
AHJ	AUTHORITY HAVING JURISDICTION	MCA	MINIMUM CIRCUIT AMPS
AL	ALUMINUM	MCB	MAIN CIRCUIT BREAKER
ATS	AUTOMATIC TRANSFER SWITCH	MLO	MAIN LUGS ONLY
AUX	AUXILIARY	MV	MEDIUM VOLTAGE
AWG	AMERICAN WIRE GAUGE	MW	MICROWAVE
BAS	BUILDING AUTOMATION SYSTEM	NC	NORMALLY CLOSED
BLDG	BUILDING	NEC	NATIONAL ELECTRIC CODE
C	CONDUIT	NIC	NOT IN CONTRACT
CB	CIRCUIT BREAKER	NL	NIGHT LIGHT
CKT	CIRCUIT	NO	NORMALLY OPEN
CLG	CEILING	OC	ON CENTER(S)
CO	CONVENIENCE OUTLETS	OCP	OVER CURRENT PROTECTION
COMM	COMMUNICATIONS	OCPD	OVER CURRENT PROTECTION DEVICE
CU	COPPER	PA	PUBLIC ADDRESS
(D)	DEMOLISH	PH	PHASE
DAS	DISTRIBUTED ANTENNA SYSTEM	PV	PHOTOVOLTAIC
(E)	EXISTING	PWR	POWER
EA	EACH	QTY	QUANTITY
EG	EQUIPMENT GROUND	R	REMOVE
EGC	EQUIPMENT GROUNDING CONDUCTOR	REF	REFRIGERATOR
ELEC	ELECTRICAL	REQ	REQUIREMENTS
EM	EMERGENCY	RGC	RIGID GALVANIZED METALLIC CONDUIT
EMT	ELECTRIC METALLIC TUBING	RMC	RIGID METAL CONDUIT
ENT	ELECTRIC NONMETALLIC TUBING	RMP	ROCKY MOUNTAIN POWER
EQUIP	EQUIPMENT	RNC	RIGID NONMETALLIC CONDUIT
EWC	ELECTRIC WATER COOLER	RR	REMOVE AND RELOCATE
EXP	EXPLOSION PROOF	S	SURFACE MOUNTED
FA	FIRE ALARM	SBJ	SYSTEM BONDING JUMPER
FACP	FIRE ALARM CONTROL PANEL	SCP	SECURITY CONTROL PANEL
FLA	FULL LOAD AMPS	SFL	SUB-FEED LUGS
FMC	FLEXIBLE METAL CONDUIT	SPD	SURGE PROTECTIVE DEVICE
FO	FIBER OPTIC	SS	SURGE SUPPRESSION
FOB	FREIGHT ON BOARD	SSBJ	SUPPLY SIDE BONDING JUMPER
FTL	FEED-THROUGH LUGS	TGB	TELECOMMUNICATION GROUNDING BUS BAR
GEC	GROUNDING ELECTRODE CONDUCTOR	TMGB	TELECOMMUNICATION MAIN GROUNDING BUS BAR
GND	GROUND CONDUCTOR	TR	TAMPER RESISTANT
H	HOSPITAL GRADE	TTB	TELEPHONE TERMINAL BOARD
HOA	HAND-OFF-AUTO	TYP	TYPICAL
HP	HORSE POWER	UF	UNDER FLOOR
HZ	HORIZONTALLY MOUNTED	UG	UNDERGROUND
IBT	INTERSYSTEM BONDING TERMINATION BAR	UNO	UNLESS NOTED OTHERWISE
ID	INTRUSION DETECTION	USB	UNIVERSAL SERIAL BUS
IG	ISOLATED GROUND	VSS	VIDEO SURVEILLANCE SYSTEM
IMC	INTERMEDIATE METAL CONDUIT	W/	WITH
INS	INSULATED	W/O	WITHOUT
ISO	ISOLATED	WP	WEATHER PROOF
KCMIL	KILO CIRCULAR MIL	WR	WEATHER RESISTANT
KVA	KILO VOLT AMPERES	XFMR	TRANSFORMER
KW	KILOWATTS		
LFNC	LIQUID-TIGHT NONMETAL CONDUIT		

GENERAL PROJECT NOTES

1. DIVISION 26000 CONTRACTOR IS RESPONSIBLE FOR READING AND APPLYING WHAT IS IN THE SPECIFICATIONS TO THIS PROJECT. ANYTHING THAT IS NOT INCLUDED ON THE PROJECT THAT IS CALLED OUT IN THE SPECIFICATION SHALL BE LISTED ON THE SUBSTANTIAL COMPLETION PUNCHLIST. THE CONTRACTOR WILL BE REQUIRED TO REMEDY THESE DEFICIENCIES WITHOUT ADDITIONAL COSTS TO OWNER. THERE WILL BE NO EXCEPTIONS.
2. THE CONTRACTOR MAY SCHEDULE A PRE-CONSTRUCTION MEETING. AT THEIR DISCRETION, WITH THE ELECTRICAL ENGINEER TO REVIEW THE DRAWINGS AND SPECIFICATIONS. THE MEETING SHALL BE A MAXIMUM OF ONE HOUR AND SHALL TAKE PLACE AT THE ENGINEER'S OFFICE.
3. THE FOLLOWING ITEMS ARE SOME OF THE REQUIREMENTS THAT ARE LISTED IN THE SPECIFICATIONS. THESE ITEMS ARE NOT ALL INCLUSIVE AND THE CONTRACTOR IS RESPONSIBLE FOR COMPLIANCE TO ALL REQUIREMENTS OF THE SPECIFICATIONS:
   - A. INSULATED THROAT CONNECTORS OR PLASTIC BUSHINGS SHALL BE UTILIZED FOR ALL CONDUIT SIZED USED ON THIS PROJECT.
   - B. THE CONTRACTOR IS RESPONSIBLE FOR UPSIZING CONDUCTORS FOR VOLTAGE DROP PER THE NEC REGARDLESS OF WHETHER IT IS SHOWN ON THE PLANS OR NOT.
   - C. THE CONTRACTOR SHALL LABEL ALL ELECTRICAL EQUIPMENT AS IT IS CALLED OUT IN THE SPECIFICATIONS.
   - D. THE CONTRACTOR SHALL PROVIDE SEISMIC SUPPORT AND BRACING FOR ALL LIGHT FIXTURES AND ELECTRICAL EQUIPMENT AS REQUIRED BY APPLICABLE LOCAL AND NATIONAL CODES.
4. THE CONTRACTOR SHALL FOLLOW THE PANELBOARD SCHEDULES AS INDICATED IN THE DRAWINGS. EACH CIRCUIT BREAKER HAS BEEN ASSIGNED TO SPECIFIC AREA OF THE BUILDING. NO DEVIATION WILL BE ALLOWED WITHOUT WRITTEN APPROVAL FROM THE ELECTRICAL ENGINEER.
5. THE CONTRACTOR SHALL INSTALL THE WIRE SIZES AS CALLED OUT ON THE ONE-LINE DIAGRAM, EQUIPMENT SCHEDULES, VOLTAGE DROP TABLES, AND ELECTRICAL SPECIFICATIONS. HOWEVER, THE CONTRACTOR IS RESPONSIBLE TO ENSURE THE WIRE IS SIZED LARGE ENOUGH TO ALLOW FOR VOLTAGE DROP.
6. THE CONTRACTOR SHALL VERIFY ALL MECHANICAL OVERCURRENT DEVICES FOR THE ACTUAL MECHANICAL EQUIPMENT SUPPLIED ON THE JOB, PRIOR TO RELEASE OF ANY ELECTRICAL DISTRIBUTION EQUIPMENT. CONTACT THE ELECTRICAL ENGINEER WITH ANY DISCREPANCIES.
7. THE CONTRACTOR SHALL VISIT THE SITE BEFORE SUBMITTING THE BID, AND SHALL EXAMINE ALL PHYSICAL CONDITIONS WHICH MAY BE MATERIAL TO THE PERFORMANCE OF HIS WORK. NO ADDITIONAL PAYMENTS WILL BE ALLOWED TO THE CONTRACTOR AS A RESULT OF EXTRA WORK MADE NECESSARY BY HIS FAILURE TO DO SO. ANY CASE OF DISCREPANCY OR LACK OF CLARITY SHALL BE PROMPTLY IDENTIFIED TO THE OWNER'S REPRESENTATIVE AND THE ENGINEER FOR CLARIFICATION.
8. THE CONTRACTOR SHALL FOLLOW THE PANELBOARD SCHEDULES AS INDICATED IN THE DRAWINGS. NO DEVIATION WILL BE ALLOWED WITHOUT WRITTEN APPROVAL FROM THE ELECTRICAL ENGINEER.

GENERAL PROJECT NOTES

9. AT A MINIMUM THE CONTRACTOR SHALL INSTALL THE WIRE SIZE AS CALLED OUT ON THE DRAWINGS. HOWEVER, THE CONTRACTOR IS RESPONSIBLE TO ENSURE THE WIRE IS SIZED LARGE ENOUGH TO ALLOW FOR VOLTAGE DROP.
10. ELECTRICAL DRAWINGS ARE BASED ON INFORMATION PROVIDED ON EXISTING AS-BUILT DRAWINGS AND FIELD SURVEY. THE CONTRACTOR TO FIELD VERIFY ALL EXISTING CONDITIONS, MATERIALS, FINISHES, AND DIMENSIONS BEFORE AND AFTER DEMOLITION/CONSTRUCTION.
11. THE CONTRACTOR SHALL ENSURE THAT ALL AREAS OUTSIDE OF CONSTRUCTION AREA ARE KEPT CLEAN AND CLEAR OF DEBRIS AND OBSTRUCTIONS AT ALL TIMES.
12. EXAMINE STRUCTURAL ELEMENTS PRIOR TO CUTTING AND CORE DRILLING. STRUCTURAL STEEL SHOULD BE LOCATED BY USING NON-DESTRUCTIVE TESTING PROCEDURES SUCH AS GROUND PENETRATING RADAR (RADIO FREQUENCY) OR OTHER APPROVED MEANS.
13. MATERIALS AND DEVICES ASSUMED TO CONTAIN HAZARDOUS MATERIALS ARE TO BE DISPOSED OF AT A FACILITY THAT IS CERTIFIED BY STATE AND FEDERAL ENVIRONMENTAL AGENCIES TO ACCEPT THESE ITEMS FOR DISPOSAL. MATERIALS TO BE REMOVED FROM THE PROJECT SITE FOR DISPOSAL ARE TO BE REPACKAGED IN THE CONTAINERS OF THE REPLACEMENT LIGHTING TUBE BOXES TO HELP ENSURE AGAINST DAMAGE AND BREAKAGE.
14. UTILIZE GALVANIZED RIGID STEEL CONDUIT WHERE CONDUIT IS SUBJECT TO VEHICULAR DAMAGE (0-10' AFF) AND ELSEWHERE IS EXPOSED TO POTENTIAL DAMAGE OR WEATHER.
15. PROVIDE INTERMEDIATE JUNCTION / PULLBOXES AS REQUIRED BY NEC CODE.
16. PROVIDE TRU TAPE FOR ALL RACEWAY EXCEEDING 100' PRIOR TO WIRE PULLS. MARK AS-BUILT DRAWINGS WITH RACEWAY FOOTAGES.
17. PROVIDE A MINIMUM OF 7 DAY NOTICE FOR ALL UTILITY AND DISTRIBUTION BOARD SHUTDOWNS. COORDINATE WITH THE AIRPORT.

11. CONTRACTOR SHALL COMPLY WITH ALL FEDERAL, STATE, AND LOCAL SAFETY AND ENVIRONMENTAL REGULATIONS.
12. THE CONTRACTOR SHALL CONFINE CONTRACTOR'S EMPLOYEES AND EQUIPMENT TO THE PROJECT WORK AREA.
13. INSULATED THROAT CONNECTORS OR PLASTIC BUSHINGS SHALL BE UTILIZED FOR ALL CONDUIT SIZES USED ON THIS PROJECT.
14. DEDICATED NEUTRAL CONDUCTORS SHALL BE PROVIDED FOR ALL LIGHTING AND POWER CIRCUITS.
15. THE CONTRACTOR SHALL LABEL ALL ELECTRICAL EQUIPMENT AS IT IS CALLED OUT IN THE SPECIFICATIONS AND DRAWINGS.
16. ALL CONDUCTORS ROUTED UNDERGROUND SHALL BE TYPE XHHW-2.

SHEET INDEX

EG001	GENERAL NOTES & SYMBOLS LISTS
EG501	ELECTRICAL DETAILS
EE101	ELEC. REMOVAL AND POWER PLANS
EP801	ELECTRICAL SCHEDULES

GSBS ARCHITECTS
ENVISION ENGINEERING
240 E. MORRIS AVE. SUITE 200
SALT LAKE CITY, UT 84115
P (801) 534-1130
www.envisioneng.com ENV:2025-201

PROFESSIONAL ENGINEER 9808039-2202 ALEKSANDAR RANKOVIĆ STATE OF UTAH
11/17/2025

REVISIONS

NO.	DATE	REMARKS	BY	APV

DESIGNED	AR	11-17-2025 DATE
DRAWN	DC	11-17-2025 DATE
CHECKED	AR	11-17-2025 DATE
APPROVED	AR	11-17-2025
DATE		11-17-2025

SLC DEPARTMENT OF AIRPORTS

ENGINEERING DIVISION
SALT LAKE CITY
DEPARTMENT OF AIRPORTS
P.O. BOX 145550
SALT LAKE CITY, UT 84114-5550
PROJECT ADDRESS:
3851 WEST 1200 NORTH

SALT LAKE CITY INTERNATIONAL AIRPORT

SLCDA DOCK 3 DOOR REPLACEMENT

CONSTRUCTION DOCUMENTS
GENERAL NOTES & SYMBOLS LISTS

PROJECT 542612

EG001

SHEET: OF

NOTES:

1. PROVIDE SUPPORT EVERY 8' OF CONDUIT RUN.

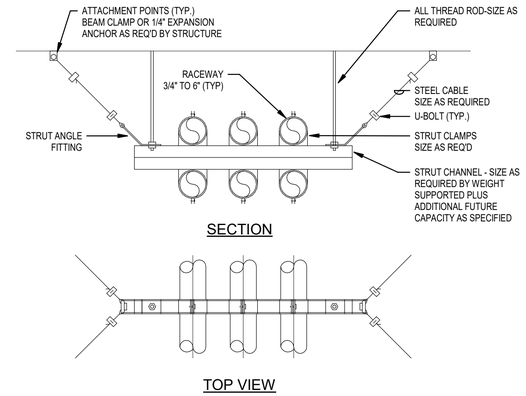

4 TYPICAL MULTIPLE RACEWAY DETAIL

SCALE: NTS

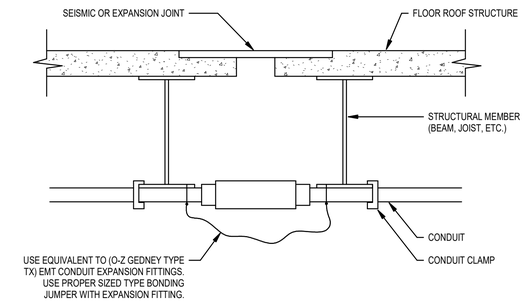

2 TYPICAL EXPANSION JOINT DETAIL

SCALE: NTS

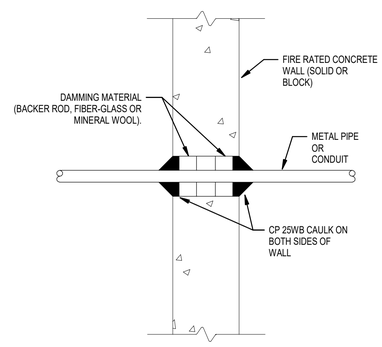

5 TYPICAL CONCRETE WALL PENETRATION DETAIL

SCALE: NTS

NOTE:

1. PROVIDE CONDUITS AND BOXES FOR ADDITIONAL OVERHEAD DOOR SENSORS AS REQUIRED.

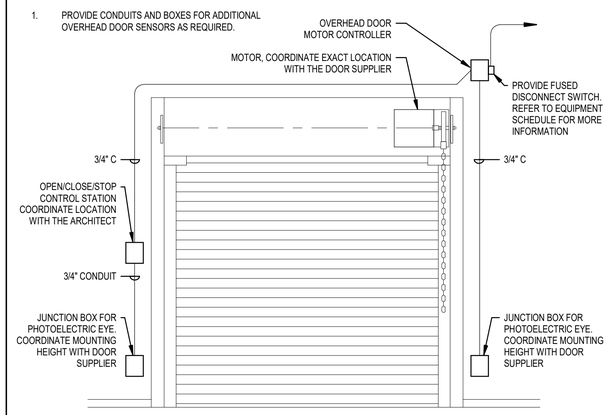

3 MOTORIZED OVERHEAD DOOR DETAIL

SCALE: NTS

NOTES:

1. THE WIRE SHALL NOT BE USED AS A COMPONENT OF ANY RACEWAY HANGER SYSTEM.

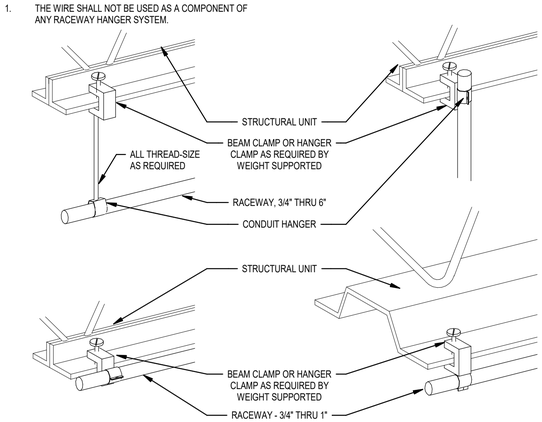

1 TYPICAL SINGLE RACEWAY SUPPORT DETAILS

SCALE: NTS

GSBS ARCHITECTS
ENVISION ENGINEERING
240 E. MORRIS AVE. SUITE 200
SALT LAKE CITY, UT 84115
P (801) 534-1130
www.envisioneng.com ENV:2025-201

PROFESSIONAL ENGINEER
9808039-2202
ALEKSANDAR RANKOVIC
STATE OF UTAH
11/17/2025

REVISIONS

NO.	DATE	REMARKS	BY	APV

DESIGNED	AR	11-17-2025 DATE
DRAWN	DC	11-17-2025 DATE
CHECKED	AR	11-17-2025 DATE
APPROVED	AR	11-17-2025
DATE		11-17-2025

SLC DEPARTMENT OF AIRPORTS

ENGINEERING DIVISION
SALT LAKE CITY
DEPARTMENT OF AIRPORTS
P.O. BOX 145550
SALT LAKE CITY, UT 84114-5550
PROJECT ADDRESS:
3851 WEST 1200 NORTH

SALT LAKE CITY INTERNATIONAL AIRPORT
SLCDA DOCK 3 DOOR REPLACEMENT

CONSTRUCTION DOCUMENTS
ELECTRICAL DETAILS

PROJECT 542612

EG501

SHEET: OF

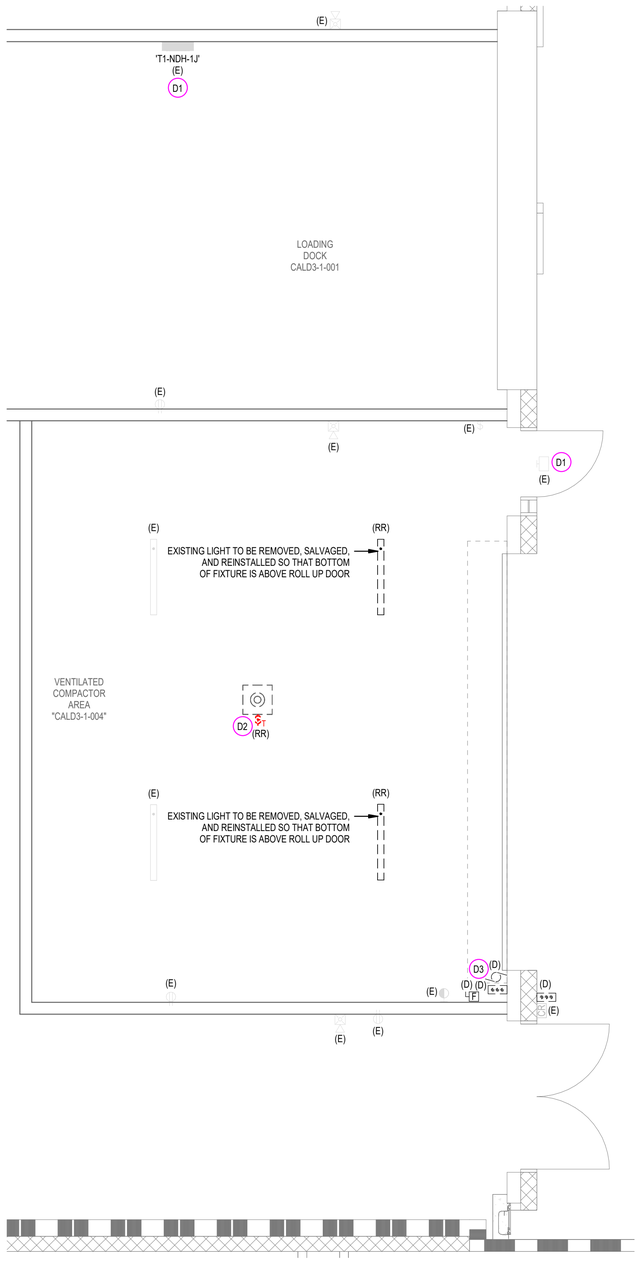

1 EE101 ELECTRICAL REMOVAL PLAN

1/4" = 1'-0"

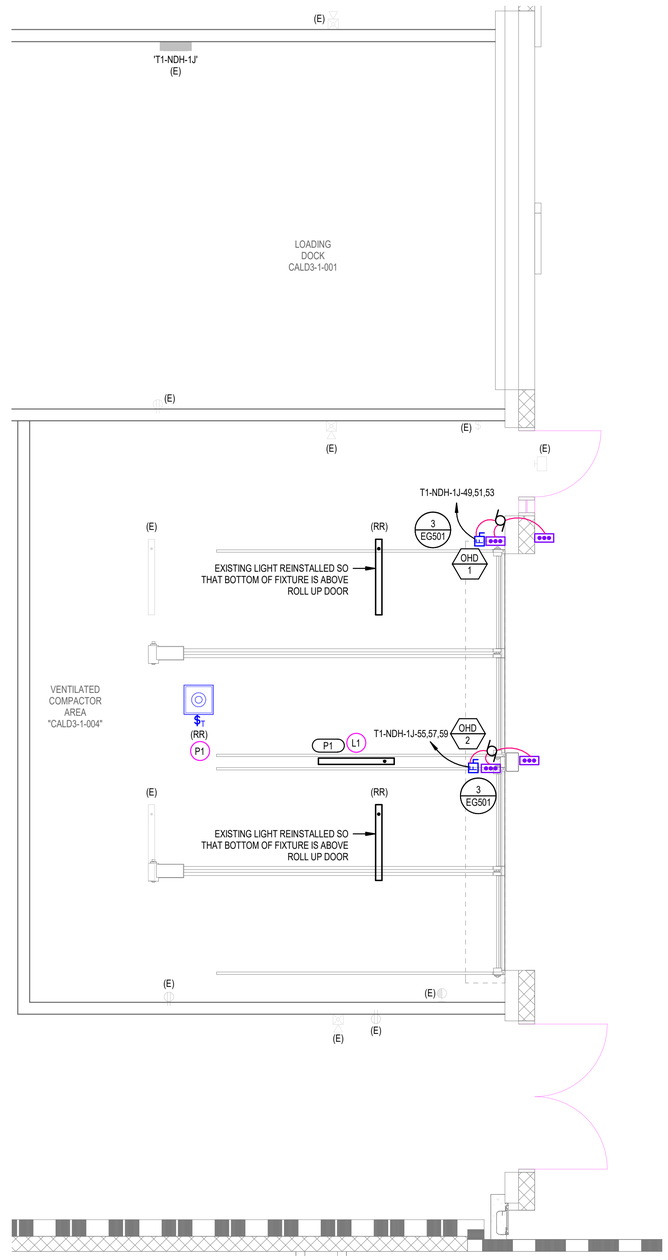

2 EE101 NEW ELECTRICAL PLAN

1/4" = 1'-0"

GENERAL DEMOLITION NOTES:

1. UNLESS SPECIFICALLY NOTED OTHERWISE, REMOVE ALL ELECTRICAL ITEMS SHOWN IN DARK AND DASHED LINES. LIGHT AND SOLID ITEMS ARE TO REMAIN. DEMOLITION ITEMS ARE SHOWN TO GIVE A BASIC DESCRIPTION OF THE EXTENT OF DEMOLITION WORK, BUT MAY NOT BE INCLUSIVE. PROVIDE DEMOLITION WORK IN ACCORDANCE WITH THE FOLLOWING REQUIREMENTS:

   A. DISCONNECT AND REMOVE ANY/ALL FIXTURES, DEVICES, EQUIPMENT, ETC. REQUIRED FOR PROPER COMPLETION OF THE WORK WHETHER SHOWN OR NOT.

   B. RELOCATE, REWIRE, AND/OR RECONNECT ANY/ALL FIXTURES, DEVICES, EQUIPMENT, ETC. THAT FOR ANY REASON OBSTRUCTS CONSTRUCTION.

   C. LEAVE ALL EXISTING FIXTURES, DEVICES, EQUIPMENT, ETC. IN PORTIONS OF THE BUILDING NOT BEING REMODELED, IN WORKING CONDITION. RESTORE ALL INTERRUPTED BRANCH CIRCUITS, FEEDERS, ETC.

   D. REMOVE AND DISPOSE OF ALL RACEWAYS, CONDUCTORS, BOXES, DEVICES, EQUIPMENT, ETC. THAT ARE NOT TO BE REUSED. TERMINATE AT ACCESSIBLE JUNCTION BOX BY PROVIDING PROPER KNOCK-OUT CLOSURE, TAPE CONDUCTORS, LABEL AS "SPARE" WITH CIRCUIT NO., ZONE NO, OR OTHER CHARACTERISTIC IDENTIFYING SOURCE.

   E. EXISTING RACEWAYS MAY BE REUSED, IF IN PLACE, WHERE POSSIBLE, AND WHERE IN COMPLIANCE WITH THE SPECIFICATIONS AND THE INTENT OF THE CONTRACT DOCUMENTS. UPGRADE AND OR PROVIDE NEW CONDUIT SUPPORTS WHERE NECESSARY FOR ALL RACEWAYS BEING REUSED. ENSURE INTEGRITY OF EXISTING RACEWAYS BEFORE REUSE.

   F. CONCEAL ALL RACEWAY AND WIRING IN EXISTING WALLS, CEILINGS, FLOORS, ETC. THE USE OF WIREMOLD IS PERMITTED ONLY WHERE SPECIFICALLY NOTED ON DRAWING.

   G. DO NOT PENETRATE STRUCTURAL ELEMENTS OF FLOORS, WALLS, CEILINGS, ROOFS, ETC.

   H. COORDINATE WITH OWNER WHAT EQUIPMENT SHOULD BE DISPOSED OF AND WHAT EQUIPMENT IS TO BE RETURNED TO OWNER.

   I. FIRE ALARM SYSTEM MUST REMAIN OPERATIONAL DURING ALL PHASES OF CONSTRUCTION.

POWER GENERAL NOTES:

1. THE DIVISION 26 CONTRACTOR SHALL DETERMINE THE EXACT ROUTING OF ALL CONDUITS IN THE FIELD. THIS PLAN REPRESENTS A SCHEMATIC REPRESENTATION OF DEVICE LOCATIONS AND CONDUIT RUNS.

KEYED NOTES (#)

D1 PROTECT AND MAINTAIN.

D2 EXISTING UNIT HEATER TO BE RELOCATED. DISCONNECT UNIT HEATER POWER CIRCUIT AND RELOCATED THE EXISTING THERMAL SWITCH ALONG WITH THE UNIT HEATER.

D3 EXISTING OVERHEAD DOOR IS BEING DEMOLISHED. REMOVE AND DISPOSE OFF ALL ASSOCIATED ELECTRICAL COMPONENTS (DISCONNECT, PUSHBUTTON, CONDUITS, WIRING, ETC.).

L1 NEW LIGHT FIXTURE TO MATCH EXISTING TYPE. FIXTURE TO BE CIRCUITED TO SAME CIRCUIT AND CONTROLS AS EXISTING LIGHTS.

P1 NEW LOCATION OF RELOCATED EXISTING UNIT HEATER AND THERMAL SWITCH. EXTEND CONDUIT AND NEW WIRING AS REQUIRED FROM PREVIOUS LOCATION TO NEW LOCATION.

GSBS ARCHITECTS
ENVISION ENGINEERING
240 E. MORRIS AVE. SUITE 200
SALT LAKE CITY, UT 84115
P (801) 534-1130
www.envisioneng.com ENV:2025-201

PROFESSIONAL ENGINEER
9808039-2202
ALEKSANDAR RANKOVIC
STATE OF UTAH
11/17/2025

REVISIONS

NO.	DATE	REMARKS	BY	APV

DESIGNED	AR	11-17-2025 DATE
DRAWN	DC	11-17-2025 DATE
CHECKED	AR	11-17-2025 DATE
APPROVED	AR	11-17-2025
DATE		11-17-2025

SLC DEPARTMENT OF AIRPORTS

ENGINEERING DIVISION
SALT LAKE CITY
DEPARTMENT OF AIRPORTS
P.O. BOX 145550
SALT LAKE CITY, UT 84114-5550
PROJECT ADDRESS:
3851 WEST 1200 NORTH

SALT LAKE CITY INTERNATIONAL AIRPORT

SLCDA DOCK 3 DOOR REPLACEMENT

CONSTRUCTION DOCUMENTS
ELEC. REMOVAL AND POWER PLANS

PROJECT 542612

EE101

SHEET: OF

EQUIPMENT SCHEDULE

UNIT NAME		DESCRIPTION	ELECTRICAL INPUT				AMPS	FEEDER					NOTE	STARTER/DISCONNECT/CONNECTION TO UNIT					ENCLOSURE	REMARKS
TYPE	No.		LOAD	TYPE	VOLTS	PHASE		QTY	CONDUIT SIZE	WIRE				STARTER SIZE	OCP		DISCONNECT			
										QTY	SIZE	EQPT GND			SIZE	POLE	SIZE	POLE		
OHD	1	OVERHEAD DOOR	0.5	HP	480 V	3	1.1 A	1	3/4"	3	12	12	10A	-	2	3	30	3	NEMA 1	
OHD	2	OVERHEAD DOOR	0.5	HP	480 V	3	1.1 A	1	3/4"	3	12	12	10A	-	2	3	30	3	NEMA 1	

STARTER/DISCONNECT/CONNECTION AT UNIT NOTES:

1. MANUAL STARTER WITH THERMAL OVERLOAD
2. MANUAL STARTER WITH THERMAL OVERLOAD PROTECTION & LOW VOLTAGE RELAY / CONTACTOR FOR ATC CONTROL.
3. COMBINATION MAGNETIC STARTER / FUSED DISCONNECT
4. COMBINATION MAGNETIC STARTER / MOTOR CIRCUIT PROTECTOR (MCP)
5. COMBINATION MAGNETIC STARTER / NON-FUSED DISCONNECT.
6. COMBINATION VARIABLE FREQUENCY DRIVE / MOTOR CIRCUIT PROTECTOR (MCP)
7. MAGNATIC STARTER
8. REDUCED VOLTAGE STARTER
9. NON-FUSED DISCONNECT SWITCH
10. FUSED DISCONNECT SWITCH
11. ENCLOSED CIRCUIT BREAKER
12. DIRECT CONNECTION
13. DUPLEX RECEPTACLE OUTLET
14. SPECIAL PURPOSE OUTLET
15. TOGGLE SWITCH
16. PILOT SWITCH
17. FUSED ELEVATOR SWITCH
18. MOTOR RATED SWITCH
19. CONTROL PANEL

A. FURNISHED, INSTALLED & CONNECTED UNDER DIVISION 26.
B. FURNISHED & INSTALLED UNDER ANOTHER DIVISION REQUIRING CONNECTIONS UNDER DIVISION 26
C. FURNISHED UNDER ANOTHER DIVISION BUT INSTALLED AND CONNECTED UNDER DIVISION 26
D. FURNISHED, INSTALLED & CONNECTED UNDER ANOTHER DIVISION
E. FURNISHED BY OWNER, INSTALLED & CONNECTED BY DIVISION 26

GENERAL NOTES:

1. CONTRACTOR SHALL BE RESPONSIBLE TO COORDINATE AND SIZE FEEDER, STARTER, DISCONNECT AND OVERCURRENT PROTECTION IN ACCORDANCE WITH THE MANUFACTURER'S RECOMMENDATIONS OF ACTUAL EQUIPMENT SUPPLIED.
2. ALL CONDUCTORS USED SHALL BE COPPER.
3. ELECTRICAL CONTRACTOR SHALL REVIEW MECHANICAL DRAWINGS FOR ANY ADDITIONAL REQUIREMENTS PRIOR TO BID.
4. ELECTRICAL CONTRACTOR SHALL REVIEW OTHER TRADE SUBMITTALS FOR ANY EQUIPMENT REQUIRING CONNECTION BY ELECTRICAL CONTRACTOR AND COORDINATE ALL REQUIREMENTS PRIOR TO ROUGH-IN.
5. SIZE ALL FUSES IN ACCORDANCE WITH MANUFACTURER'S RECOMMENDATIONS.

LIGHT FIXTURE SCHEDULE

TYPE	DESCRIPTION	LIGHT SOURCE	ELECTRICAL		APPROVED MANUFACTURERS	CATALOG NUMBER	COMMENTS/NOTES
			VOLTAGE	LOAD			
P1	DESCRIPTION: 4' LED STRIP LIGHT WITH WIRE GUARD DIMENSION: 3"x3"x4' MOUNTING: CHAIN MATERIAL: STEEL, COLOR: SCBA LENS MATERIAL: FROSTED ACRYLIC LENS REFLECTOR DISTRIBUTION TYPE: WIDE	LAMP TYPE: LED LUMENS: 4586 DIMMING: 0-10V COLOR TEMP: 3500K	277 V	48	METALUX (OR APPROVED EQUIVALENT)	4SNX-48SL-LW-UNV-L835-CD1 / AYC-CHAIN/SET-U / WG-SNX/SN-4FT-B	-

PANELBOARD SCHEDULE

PANEL NAME: T1-NDH-1J

MOUNTING: SURFACE
ENCLOSURE: NEMA 1
DOOR TYPE: DOOR-IN-DOOR (EXISTING)
VOLTAGE: 480/277 Wye
PHASE: 3
WIRES: 4
Min. A.I.C. RATING: 35,000
LOCATION:
MAIN TYPE: MCB
BUS RATING: 250 A
MCB RATING: 250 A
BUS MATERIAL: COPPER
FEED FROM:
SPD:
NEUTRAL RATING:
ISOLATED GROUND:

BRANCH BREAKERS

KEYED NOTE	CIRCUIT DESCRIPTION	AMP	POLE	LOAD TYPE	CKT #	A		B		C		CKT #	LOAD TYPE	POLE	AMP	CIRCUIT DESCRIPTION	KEYED NOTE
9	EXISTING LOAD	15 A	3	--	1	0 VA	0 VA					2	--	3	20 A	EXISTING LOAD	9
--	--	--	--	--	3			0 VA	0 VA			4	--	--	--	--	--
--	--	--	--	--	5					0 VA	0 VA	6	--	--	--	--	--
9	EXISTING LOAD	15 A	3	--	7	0 VA	0 VA					8	--	3	20 A	EXISTING LOAD	9
--	--	--	--	--	9			0 VA	0 VA			10	--	--	--	--	--
--	--	--	--	--	11					0 VA	0 VA	12	--	--	--	--	--
11	SPARE	15 A	3	--	13	0 VA	0 VA					14	--	3	60 A	EXISTING LOAD	9
--	--	--	--	--	15			0 VA	0 VA			16	--	--	--	--	--
--	--	--	--	--	17					0 VA	0 VA	18	--	--	--	--	--
9	EXISTING LOAD	35 A	3	--	19	0 VA	0 VA					20	--	3	60 A	EXISTING LOAD	9
--	--	--	--	--	21			0 VA	0 VA			22	--	--	--	--	--
--	--	--	--	--	23					0 VA	0 VA	24	--	--	--	--	--
9	EXISTING LOAD	35 A	3	--	25	0 VA	0 VA					26	--	3	50 A	EXISTING LOAD	9
--	--	--	--	--	27			0 VA	0 VA			28	--	--	--	--	--
--	--	--	--	--	29					0 VA	0 VA	30	--	--	--	--	--
9	EXISTING LOAD	20 A	3	--	31	0 VA	0 VA					32	--	3	50 A	EXISTING LOAD	9
--	--	--	--	--	33			0 VA	0 VA			34	--	--	--	--	--
--	--	--	--	--	35					0 VA	0 VA	36	--	--	--	--	--
9	EXISTING LOAD	20 A	3	--	37	0 VA	0 VA					38	--	1	30 A	EXISTING LOAD	
--	--	--	--	--	39			0 VA	0 VA			40	--	1	30 A	EXISTING LOAD	
--	--	--	--	--	41					0 VA	0 VA	42	--	1	30 A	EXISTING LOAD	
	EXISTING 100A/3P SPACE	--	3	--	43	--	--					44	--	3	--	EXISTING 100A/3P SPACE	
--	--	--	--	--	45			--	--			46	--	--	--	--	--
--	--	--	--	--	47					--	--	48	--	--	--	--	--
10	OHD-1	20 A	3	M	49	305 VA	0 VA					50	--	3	20 A	EXISTING SPARE	
--	--	--	--	--	51			305 VA	0 VA			52	--	--	--	--	--
--	--	--	--	--	53					305 VA	0 VA	54	--	--	--	--	--
10	OHD-2	20 A	3	M	55	305 VA	0 VA					56	--	3	20 A	EXISTING SPARE	
--	--	--	--	--	57			305 VA	0 VA			58	--	--	--	--	--
--	--	--	--	--	59					305 VA	0 VA	60	--	--	--	--	--
	EXISTING SPACE	--	1	--	61	--	--					62	--	1	--	EXISTING SPACE	
	EXISTING SPACE	--	1	--	63			--	--			64	--	1	--	EXISTING SPACE	
	EXISTING SPACE	--	1	--	65					--	--	66	--	1	--	EXISTING SPACE	
	TOTAL CONNECTED LOAD PER PHASE (VA)					610 VA		610 VA		610 VA							
	TOTAL CONNECTED CURRENT PER PHASE (AMPS)					2 A		2 A		2 A							

LOAD CLASSIFICATION	CONNECTED LOAD	DEMAND FACTOR	ESTIMATED DEMAND	PANEL TOTALS	
Motor	1829 VA	112.50%	2058 VA		
				Total Conn. Load:	1829 VA
				25% OF LARGEST MOTOR:	
				Total Est. Demand:	2058 VA
				Total Conn. Current:	2 A
				Total Est. Demand Current:	2 A

PANELBOARD SCHEDULE KEYED NOTE:

1. PROVIDE CLASS A GROUND FAULT INTERRUPTER TYPE CIRCUIT BREAKER.
2. PROVIDE ARC FAULT CIRCUIT INTERRUPTER TYPE CIRCUIT BREAKER.
3. PROVIDE 30 MILLIAMPERE EQUIPMENT GROUND FAULT PROTECTOR TYPE CIRCUIT BREAKER.
4. PROVIDE SHUNT TRIP CIRCUIT BREAKER WITH 120 V COIL.
5. PROVIDE HACR RATED CIRCUIT BREAKER.
6. PROVIDE HANDLE CLAMP FOR HOLDING CIRCUIT BREAKER IN THE "ON" OR "OFF" POSITION.
7. PROVIDE SWITCHING RATED CIRCUIT BREAKER.
8. PROVIDE NEW CIRCUIT BREAKER IN EXISTING PANELBOARD (WHERE PANEL IS LABELED AS EXISTING) OF SAME MANUFACTURER AND A.I.C. RATING AS EXISTING.
9. EXISTING LOAD.
10. UTILIZE EXISTING SPARE BREAKER.
11. RELABEL EXISTING 15A, 3 POLE BREAKER AS SPARE.

GSBS ARCHITECTS
ENVISION ENGINEERING
240 E. MORRIS AVE. SUITE 200
SALT LAKE CITY, UT 84115
P (801) 534-1130
www.envisioneng.com ENV:2025-201

PROFESSIONAL ENGINEER 9808039-2202 ALEKSANDAR RANKOVIC STATE OF UTAH
11/17/2025

REVISIONS

NO.	DATE	REMARKS	BY	APV

DESIGNED	AR	11-17-2025
		DATE
DRAWN	DC	11-17-2025
		DATE
CHECKED	AR	11-17-2025
		DATE
APPROVED	AR	11-17-2025
DATE		11-17-2025

SLC DEPARTMENT OF AIRPORTS

ENGINEERING DIVISION
SALT LAKE CITY
DEPARTMENT OF AIRPORTS
P.O. BOX 145550
SALT LAKE CITY, UT 84114-5550
PROJECT ADDRESS:
3851 WEST 1200 NORTH

SALT LAKE CITY INTERNATIONAL AIRPORT
SLCDA DOCK 3 DOOR REPLACEMENT

CONSTRUCTION DOCUMENTS
ELECTRICAL SCHEDULES

PROJECT 542612

EP801

SHEET: OF