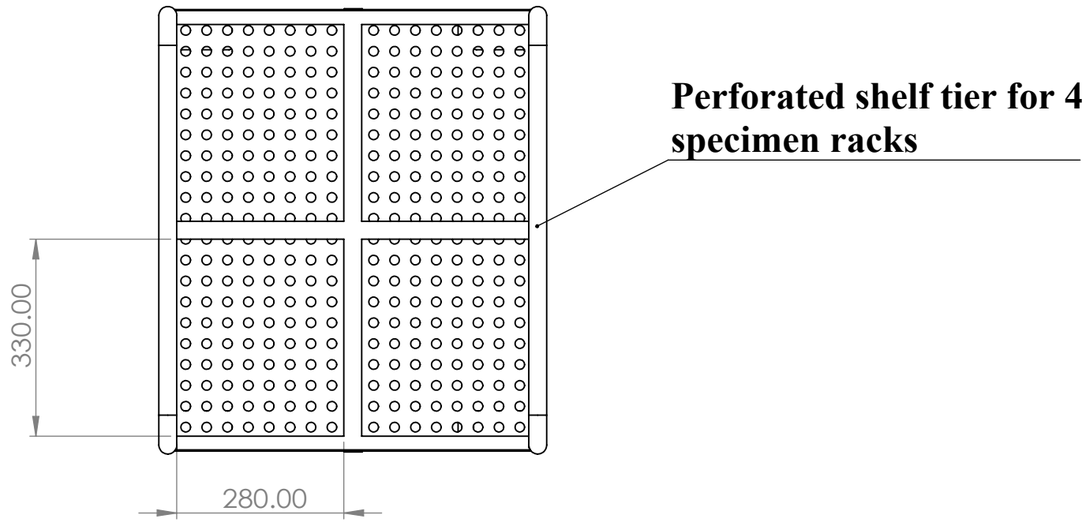
Perforated shelf tier for 4 specimen racks
330.00
280.00

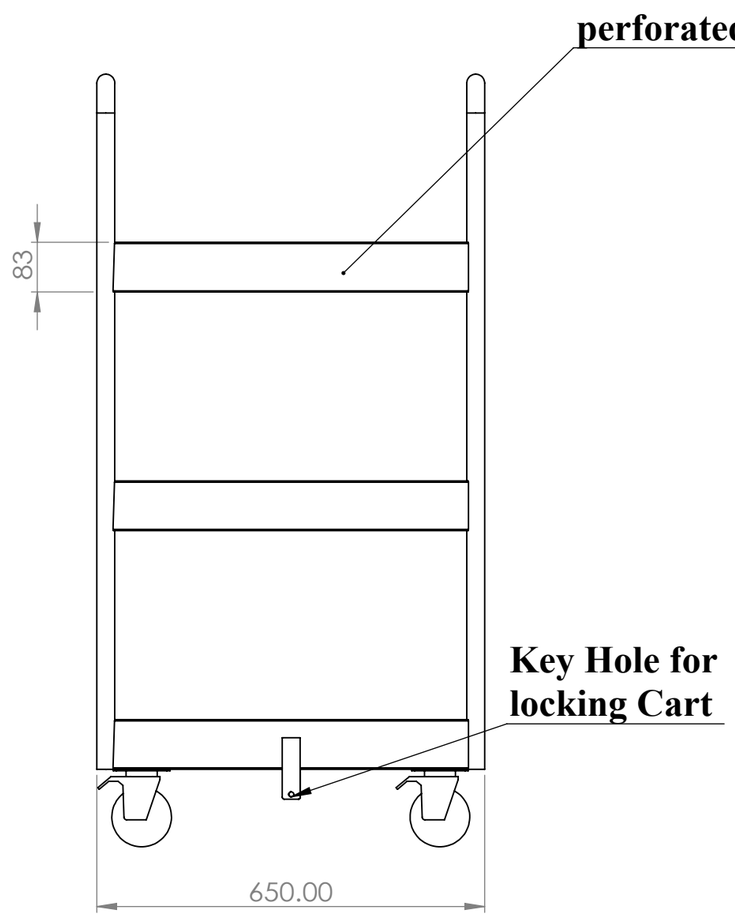
perforated shelf tier
83
Key Hole for locking Cart
650.00

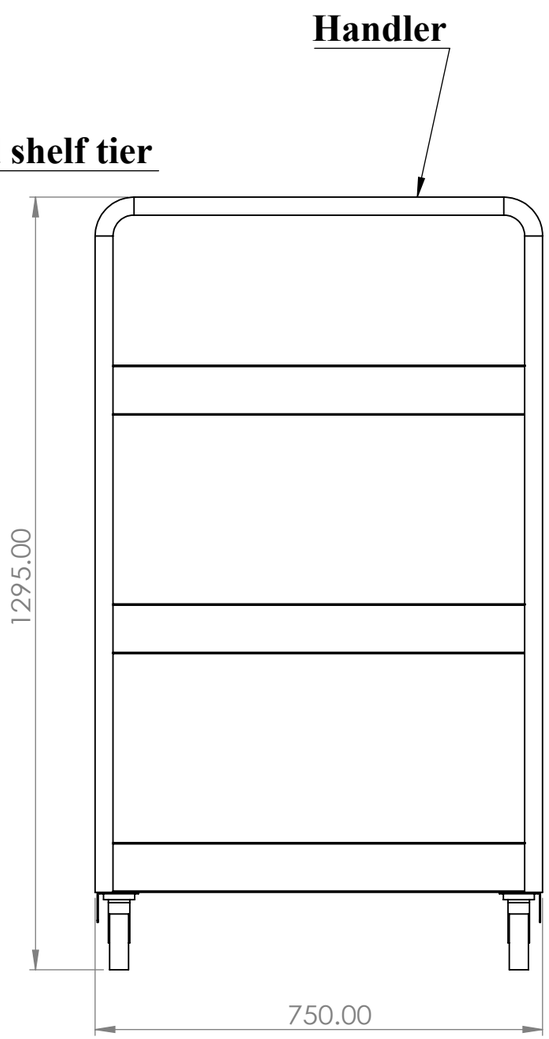
Handler
1295.00
750.00

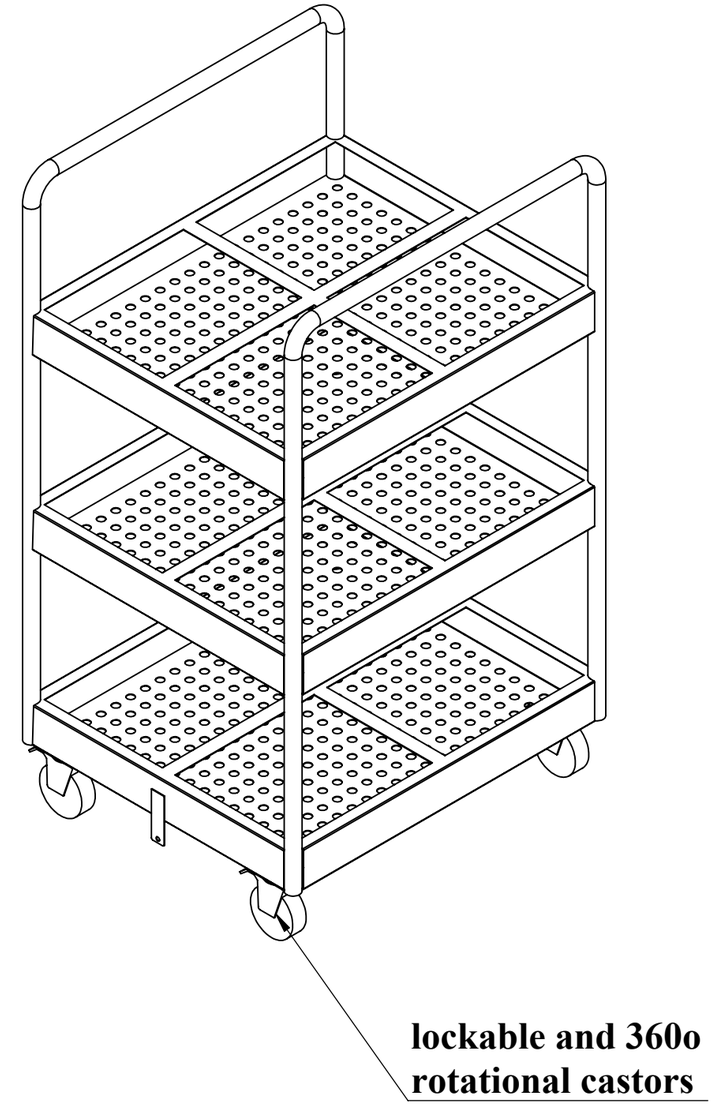
lockable and 360o rotational castors