INTIALS: EH
DATE: 10/30/2025

PRODUCTION APPROVED

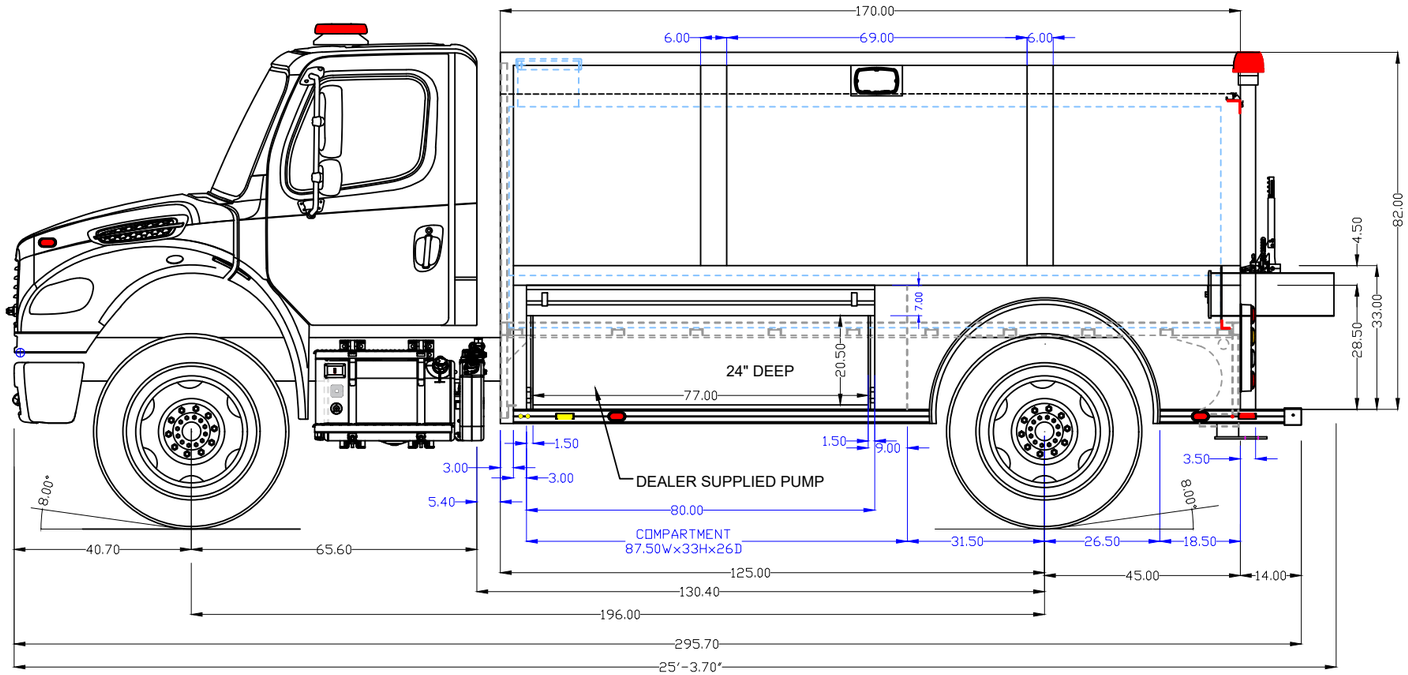

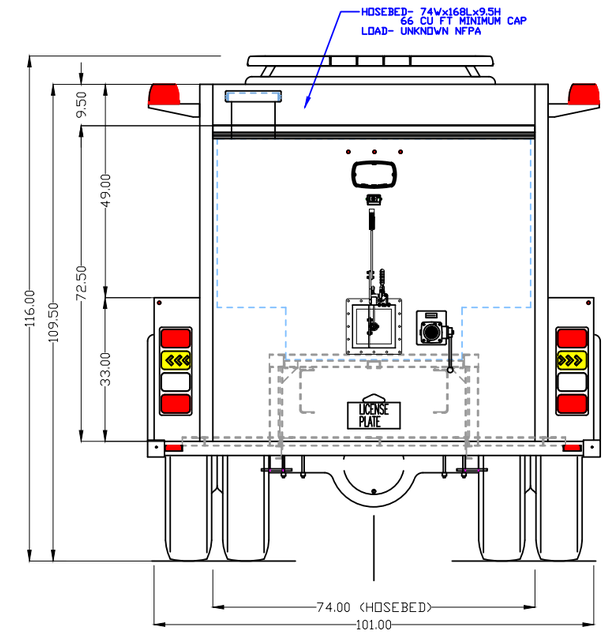

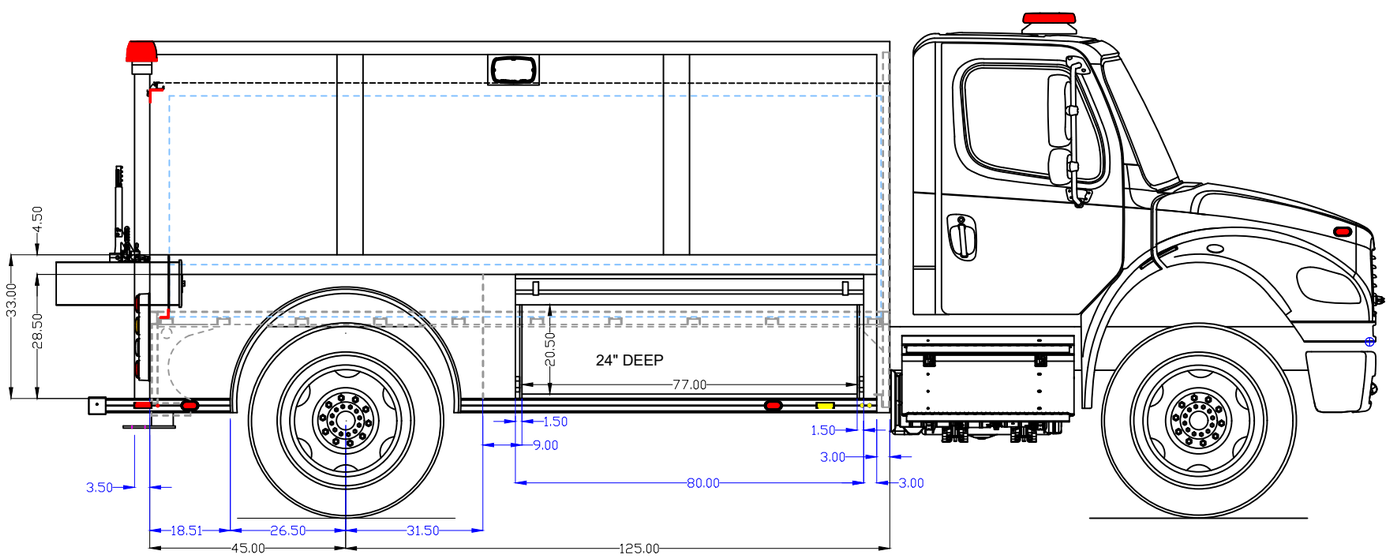

NOTES:
1. OVERALL HEIGHT IS IN LOADED CONDITION. UNLOADED HEIGHTS MAY BE 4" ABOVE HEIGHTS SHOWN.
2. DO NOT SCALE DRAWING.
3. ALL DIMENSIONS ARE APPROXIMATE AND SUBJECT TO ENGINEERING CHANGES.
4. DRAWING MAY OR MAY NOT SHOW ALL ITEMS AS DESCRIBED IN THE WRITTEN DETAIL SPECIFICATIONS.
5. INCLUSION OF AN ITEM ON THE DRAWING DOES NOT CONSTITUTE INCLUSION OF THAT ITEM WITH THE FINAL DELIVERED UNIT.

REV - : -		DATE: -
REV -: -		DATE: -
REV 1 :	EH	DATE: 10-30-25 RELEASED
DRAWN:	CM	DATE: 10-6-25

PROPRIETARY AND CONFIDENTIAL
THE INFORMATION CONTAINED IN THIS DRAWING IS THE SOLE PROPERTY OF ROSENBAUER. ANY REPRODUCTION IN PART OR AS A WHOLE WITHOUT THE WRITTEN PERMISSION OF ROSENBAUER IS PROHIBITED.

APPROVED BY:

MAXIMUM HEIGHT	NONE
MAXIMUM LENGTH	NONE
BODY WIDTH	101"

CHASSIS: FREIGHTLINER M6
PUMP: WATERAX MOTOR PUMP
TANK: G3 2000 GAL

HEIMAN STOCK WK254

rosenbauer

ROSENBAUER FX 1/8"

JOB NUMBER	DRAWING NUMBER	REV
22590	2704-D	1