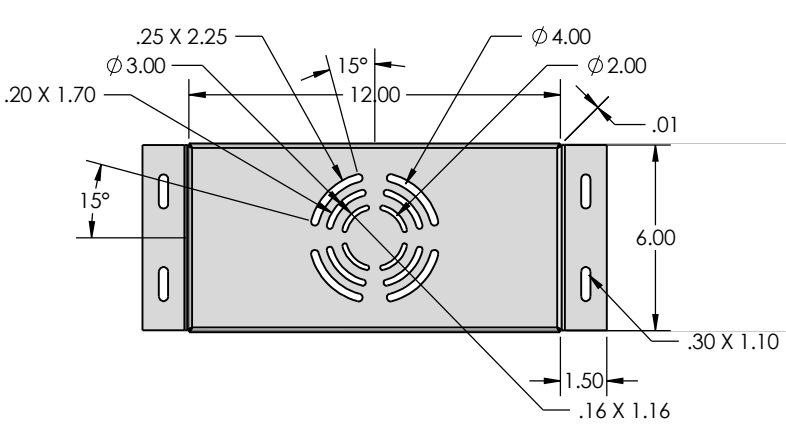

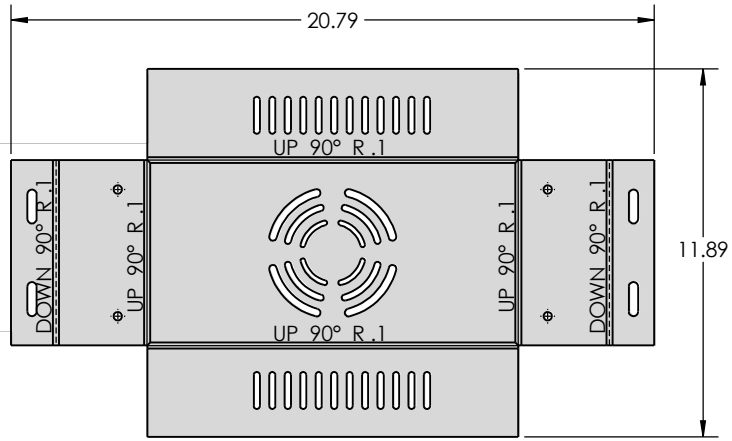

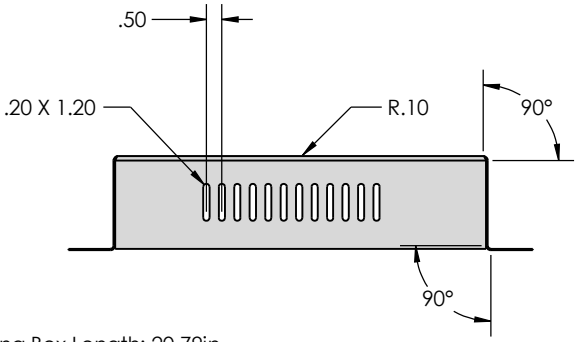

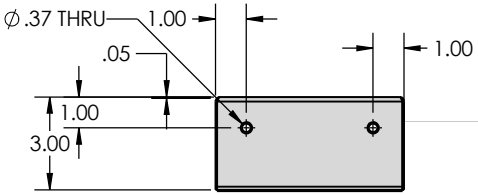

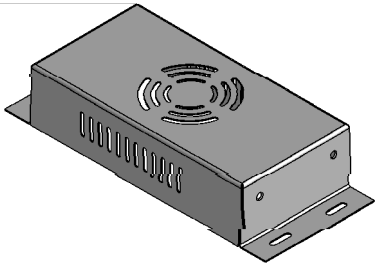

Bounding Box Length: 20.79in
Bounding Box Width: 11.89in
Sheet Metal Thickness: 0.05in
Bounding Box Area: 247.24in^2
Bounding Box Area-Blank: 183.81in^2
Cutting Length-Outer: 65.36in
Cutting Length-Inner: 122in
Cut Outs: 44
Bends: 6
Bend Allowance: 0.5
MATERIAL: 2024 Alloy
Mass: 0.89lb
Description: Sheet
Bend Radius: 0.1in
Surface Treatment: Finish <not specified>
Cost-TotalCost: 0
QUANTITY: 1
Sheet Metal Gauge: Gauge <not specified>

PROPRIETARY AND CONFIDENTIAL

THE INFORMATION CONTAINED IN THIS DRAWING IS THE SOLE PROPERTY OF <INSERT COMPANY NAME HERE>. ANY REPRODUCTION IN PART OR AS A WHOLE WITHOUT THE WRITTEN PERMISSION OF <INSERT COMPANY NAME HERE> IS PROHIBITED.

NEXT ASSY	USED ON	UNLESS OTHERWISE SPECIFIED:		NAME	DATE
		DIMENSIONS ARE IN INCHES TOLERANCES: FRACTIONAL ± ANGULAR: MACH ± BEND ± TWO PLACE DECIMAL ± THREE PLACE DECIMAL ±	DRAWN	FONTILUS	5/24/25
			CHECKED		
			ENG APPR.		
			MFG APPR.		
		INTERPRET GEOMETRIC TOLERANCING PER:	Q.A.		
		MATERIAL	COMMENTS:		
		FINISH			
APPLICATION		DO NOT SCALE DRAWING			

TITLE:

SIZE	DWG. NO.	REV
B	Sheet Metal Enclosure_01	
SCALE: 1:4	WEIGHT:	SHEET 1 OF 1