SAFETY MANUAL

Integrated Water Services, Inc.
(the Company)

INTEGRATED WATER SERVICES

Table of Contents

1. Introduction and Table of Contents
2. HSE Policy Statement
3. Code of Safe Conduct
4. Scope & Responsibilities
5. Abrasive Blasting
6. Aerial Lifts
7. Asbestos Pipe Coating Removal
8. Bloodborne Pathogens
9. Cold Weather
10. Compressed Gas Cylinders
11. Confined Space Entry
12. Covid 19
13. Cranes
14. Disciplinary Program
15. Driving
16. Drug Free Workplace
17. Electrical
18. Emergency Action Planning
19. Fall Protection
20. Fire Extinguishers
21. First Aid
22. Fit For Duty
23. Forklift and Industrial Trucks
24. Good Catch Program
25. Hand and Power Tools
26. Hazard Communication
27. Hearing Conservation
28. Heat Illness Prevention
29. Hot Work
30. Hydrogen Sulfide
31. Incident Reporting
32. Injury and Illness Prevention
33. Ladder
34. Lockout Tagout-Energy Isolation
35. Machine Guarding
36. Mobile Equipment
37. Multi-Employer Worksites
38. Personal Protective Equipment (PPE)
39. Pressure Testing
40. Respiratory Protection
41. Rigging and Material Handling

42. Safety Stewards
43. Scaffolding
44. Silica Exposure Control
45. Site Specific Safety Orientation
46. Spill Prevention & Response
47. Storm Water Pollution Prevention Plan
48. Subcontractor Management Plan
49. Traffic Control
50. Traffic Safety Bulletin
51. Trenching Excavation & Shoring
52. Walking Working Surfaces
53. Waste Management

Scope & Responsibilities

This Health Safety & Environmental (HSE) Manual is intended as a reference tool for Integrated Water Services, Inc. employees and contractors. The health, safety and environmental information in this Manual is intended to provide an overview of the policies and work procedures that are required of employees and contractors of the company.

Integrated Water Services was started in 2003 focused on implementing turn-key solutions for water and wastewater treatment. Over the years, the team built the company into one of the leading design-build providers for water and wastewater solutions.

The goal of Integrated Water Services, Inc. is to leverage our expertise in design, project management, and construction to build water and wastewater infrastructure in a manner that creates sustainable value for our employees, clients, communities, and partners.

IWS utilizes a variety of technologies to best meet our client's needs. Projects range in size from $500,000 to $25M for residential, industrial, commercial, and municipal clients. We execute both public and private sector projects and actively seek business partners to best service our client's needs. Although most of our projects are west of the Mississippi River, we also have project experience in the Southeast U.S.

The purpose of this Safety Manual is to establish certain minimum safety standards Integrated Water Services employees and contractors must meet in the execution of their work.

Each employee, in the interest of personal safety, must assume the responsibility for following the instructions and requirements covered in this manual, and each contractor must have safety policies that at a minimum meet the requirements of the procedures located within this manual. However, the HSE procedures within this manual may be adopted for use by contractors who do not have formal HSE procedures in place.

Common sense and experience must be applied when considering safety on any specific work assignment. If you are not familiar with a particular work site or a particular work function, request a tailgate orientation from your supervisor prior to beginning work.

The content of this Manual may not provide all necessary safety information for a specific job. Always check to see if special work procedures are required for a specific job or client location.

At Integrated Water Services, we believe it is very important that our employees and contractors adopt a culture, or way of thinking, that all incidents are preventable. To assist in helping build this culture, we have created the Three Disciplines of Safety Execution that helps us understand how incidents are caused and how they are prevented. We believe it is important to share our commitment to safety to all of our employees, and in return, we expect our employees to share this same commitment when performing work for the Company.

Enforcement of Safety Procedures

All employees, including all levels of management, will be held accountable for obeying the Company safety procedures. The following four-step disciplinary policy will be applied to everyone by the appropriate level of supervision:

- Oral warning
- Written reprimand
- Suspension
- Dismissal

Visitors, including contractors who violate safety and health rules and procedures, will be escorted from the site.

Should the disciplined person request a review of the disciplinary action, the supervisor will review the situation and make a recommendation to management, which reserves the right for final decision.

Enforcement of Safety Management System Requirements

George Bunker is the person responsible for the development and implementation of the Integrated Water Services Safety Management System (SMS). The Company SMS has been developed and presented using an automated interactive online system that ensures employees comply with safe work practices and protocols for effectively communicating those practices.

Email: gbunker@integratedwaterservices.com
Phone: 970-632-4917

Integrated Water Services is Committed to Exceptional Team Safety Performance

- Integrated Water Services, Inc. ("the Company") is committed to providing and maintaining a safe and healthy workplace for all its employees.
- It is the philosophy of the Company that safety performance is a key indicator of organizational excellence; therefore, safety must be incorporated into the everyday business processes of the Company.
- The Company will meet or exceed regulatory Health, Safety, and Environment (HSE) standards in all areas where we conduct business.
- Management will consider all employee suggestions for achieving a safer, healthier workplace through the organization of a Safety Council that includes employer and employee representatives who are responsible for recommending safety and health improvements and management techniques to be used in the workplace.
- The Company is fully committed to pursuing the highest product and service quality while holding safety as a core value that ensures no harm to people or the environment.
- The Company subscribes to the following key disciplines of safe project execution as its foundation for maintaining an injury-free work environment:

Goal:

Protect people, the environment, assets, and reputation by achieving zero incidents.

Leading Measures:

- Maintain required employee training
- Have a good plan, that
- Identifies and mitigates the hazards, and
- Stop Work when something is not right

Performance Expectations:

- Safety performance is tracked weekly using leading indicators
- Scorecard is visible, simple, and updated weekly
- Teams are recognized for proactive hazard identification and intervention

Accountability:

- Leaders set clear expectations and reinforce them daily
- Supervisors perform routine field observations and coaching
- Continuous improvement actions are documented, tracked, and closed

All Company employees are expected to participate in the safety program activities, including training, pre-job safety planning, wearing required personal protective equipment, attending safety meetings, reporting workplace hazards and unsafe work practices, and reporting near misses, incidents, and good catches.

Every employee of the Company has an obligation to stop unsafe acts from occurring or continuing. If you see a hazard, you own the hazard, and you are expected to eliminate or mitigate the hazard immediately!

Cody Phipps
Chief Executive Officer

CODE OF SAFE CONDUCT

Integrated Water Services, Inc.
(the Company)

INTEGRATED WATER SERVICES

At Integrated Water Services, we value safety and believe it is everyone's responsibility to work safely. We will do everything possible to protect employees from accidents and expect every employee to comply with all rules and these safe practices:

- Work areas shall be kept clean and free from debris.
- Food is prohibited in the work area.
- Smoking is prohibited in the work area.
- All exits shall be kept clear, well lit, and unlocked during working hours.
- An appropriate fire extinguisher is to be available at all work areas.
- No employee shall knowingly be permitted or required to work while the employee's ability or alertness is so impaired by fatigue, illness, or other causes that it might expose the employee or others to injury.
- Anyone known to be under the influence of drugs, prescription or illegal, or intoxicating substances which impair the employee's ability to safely perform the assigned duties shall not be allowed to work while in that condition.
- Horseplay, scuffling, improper use of equipment, and other acts that have adverse influence on the safety or well-being of employees are prohibited.
- Personal players with earphones/earbuds are prohibited in the work area.
- Report unsafe conditions and/or equipment to supervisor or safety coordinator as soon as you see them.
- Report accidents, injuries, and illnesses to the supervisor or safety coordinator immediately so that medical treatment can be rendered quickly.
- Report all "close calls" or near accidents that do not result in injuries to the supervisor so that preventive measures may be taken.
- Keep your eyes and ears open and use common sense while working on the job site.
- Always utilize proper lifting techniques. Never attempt to lift or push an object that is too heavy.
- Do not store any material in an unstable manner or stack materials on top of cabinets or other high places.
- Always ground electrical tools or equipment prior to use.
- Personal Protective Equipment shall be worn when necessary.
- Inspect equipment prior to use. Report faulty or worn tools, equipment, and electrical cords to the supervisor immediately so they can be removed from use.
- Gasoline shall not be used for cleaning purposes.
- Always keep flammable or toxic chemicals in approved closed containers when not in use. Store chemicals as required by the manufacturer or the Safety Data Sheet.
- In the event of fire, sound the nearest alarm, evacuate the building or the worksite and gather at the designated muster point until the All-Clear signal is given.

ABRASIVE BLASTING

Integrated Water Services, Inc.

(the Company)

Purpose

The purpose of this program is to provide safe guidelines for the operation and maintenance of abrasive blasting equipment and their related components for Integrated Water Servcies personnel.

Scope

This program covers all employees involved in abrasive blasting activities. Whenever hazardous substances such as dusts, fumes, mists, vapors, or gases exist or are produced in the course of construction work, their concentrations shall not exceed the limits specified in the "Threshold Limit Values of Airborne Contaminants – 1970" of the American Conference of Governmental Industrial Hygienists. When ventilation is used as an engineering control method, the system shall be installed and operated according to the requirements of CFR 1926.57 (Ventilation).

When work is performed by a subcontractor on a company site, the contractor's written safety program shall take precedence for their employees. However, subcontractors may adopt this procedure for their use.

Key Responsibilities

Supervisors

- Be aware of potentially hazardous conditions that may arise during the blasting process prior to starting any blasting job and must take measures to protect employees.
- Ensure that all employees are trained on related safety topics.
- Understand the importance of regularly scheduled maintenance for continued safe operation of blast equipment. Ensure that all employees comply with this policy and all other related policies.

Employees

- Be familiar with the safe operating functions of blasting equipment to be used on a job.
- Comply with all company policies.
- Have knowledge of hazards associated with respirable silica.
- Understand they are prohibited from using compressed air for cleaning unless the pressure is reduced to less than 30 pounds per square inch and be equipped with effective chip guarding and proper PPE.

Procedure

General

Abrasives and the surface coatings on the materials blasted are shattered and pulverized during blasting operations and the dust formed will contain particles of respirable size. The composition and toxicity of the dust from these sources shall be considered in making an evaluation of the potential hazards.

Dust shall not be permitted to accumulate on the floor or on ledges outside of an abrasive blasting enclosure. Dust spills shall be cleaned up promptly. Aisles and walkways shall be kept clear of steel shot or similar abrasives which may create a slipping hazard.

Equipment Handling

Follow these guidelines when moving blasting equipment to prevent back strains and crushing injuries:

- Use a forklift, crane or other type of lifting device for transporting a blast machine; always use a lifting device when the machine contains abrasive.
- Never manually move a blast machine where abrasive has been spilled on hard surfaces or on a wet or slippery surface.
- Never attempt to manually move a blast machine containing abrasive.
- Always disconnect hoses from machines to avoid interference during moving.

Air Compressors

- Air compressors must be located in a well-ventilated area. It must be able to contain large volumes of clean, toxicant-free air. This means the compressor must be placed up wind from the blasting operation and out of the range of dust and flying abrasives.
- Due to the high pressure that air compressors create, precautions must be taken to prevent unleashing of strong forces that can cause serious bodily injury.
- Air for abrasive blasting respirators must be free of harmful quantities of dust, mists, or noxious gases and must be inspected daily, prior to use and comply with CFR 1910.134(I) (Respiratory Protection).
- Never adjust the pressure setting on a compressor above the blast equipment maximum working pressure rating. The maximum working pressure rating is indicated on the manufacturer's metal identification plate.

Blast Pot

- Position blast pots and/or compressors on level ground. Machines operate best when they sit on level surfaces.
- For communication purposes place blast pot between the compressor and the surface to be blasted. This will enable the pot tender and operator to make visual contact.
- All couplings and pipefitting on the blast pot, compressor and hoses must be airtight.
- Blast pots must be inspected daily prior to use.

Hoses and Connectors

- Couplings must have safety wires in place and be secure as required by federal safety regulations. The operator shall be responsible to ensure that each coupling has safety wires in place.
- Whip checks must be installed at bull hose connections.
- Operator should hold onto the blast hose until the air pressure from the nozzle drops off to zero.
- Do not use hoses with soft spots.
- Never use tape to repair a blown-out hose.
- Immediately replace a hose if a blowout or leak occurs.
- Hose ends must come into contact with coupling gaskets to prevent leaks and to maintain static electricity conductivity.

Nozzles and Remote Controls

- Blast nozzles shall be bonded and grounded to prevent the buildup of static charges. Where flammable or explosive dust mixtures may be present, the abrasive blasting enclosure, the ducts, and the dust collector shall be constructed with loose panels or explosion venting areas, located on sides away from any occupied area, to provide pressure relief in case of explosion following the principles set forth in the National Fire Protection Association Explosion Venting Guide. NFPA 68-1954.

- Organic abrasives which are combustible shall be used only in automatic systems.
- Blast cleaning nozzles shall be equipped with an operating valve which must be held open manually. A support shall be provided on which the nozzle may be mounted when it is not in use.
- All blast machines must be equipped with remote control systems to start and stop the blasting process.
- Never tape, strap, or tie down an air actuated remote-control lever or choke electric remote-control switch.
- If there is the slightest delay in reaction time of the handle lever or lever lock to open, check for dust and dirt build-up around pivot pins before resuming blasting. Also, test the tension on the lever springs, and replace them immediately if they do not respond rapidly.
- Substituting component pieces with other manufacturer's parts is not allowed.
- Inspect blast nozzles for wear and cracks on the inner liner. When a nozzle orifice is worn 1/16" larger than its original size, it should be replaced.
- Check nozzles and nozzle holders for deterioration of thread form. Threads on nozzles and their companion holders must not be cross threaded, worn or distorted.
- Hoses that are being tied and lifted to blasting operations being conducted above grade, i.e., scaffolds, shall be depressurized to prevent accidental start-up.

Operator Signals

- On the job site, voice communication is often impossible. Even shouts cannot be heard over the noise of compressors and blasting. In addition, the operator's head will be enclosed in the helmet, which blocks out sound and limits vision. For these reasons, an industry wide standard set of hand and sound signals has been developed.
- Signals may be visual hand movements, flashing light, pulls on a rope or sounds made by banging a hammer or using a horn or electric buzzer.
- Every operator must become familiar with the signals to be used on the jobsite.

Respirator Use

- A specific work-site procedure must be added to the project Site Specific Safety Plan (SSSP) where respirators or blasting hoods/helmets are required to protect the health of the operator. The Company Respiratory Protection program shall be established wherever it is necessary to use respiratory protective equipment. Abrasive blasting respirators shall be worn by all abrasive blasting operators under certain qualifying conditions.
- Equipment for the protection of eyes, face and body shall be utilized by the operator when the respirator design does not provide adequate protection, and to any other personnel working in the vicinity of abrasive blasting operations. This equipment shall conform to the requirements of CFR 1926.102 (Eye and Face Protection).
- Equipment for protection of the eyes and face shall be by all personnel working in the vicinity of abrasive blasting operations.

Environmental Controls

- Organic abrasives which are combustible shall be used only in automatic systems. Where flammable or explosive dust mixtures may be present, the construction of the equipment, including the exhaust system and all electrical wiring, shall conform to the requirements of American National Standard Installation of Blower and Exhaust Systems for Dust, Stock, and Vapor Removal or Conveying, Z33.1-1961 (NFPA 91-1961), and Subpart S of 1926.57 (Ventilation).
- The work area must be inspected for exterior electrical power lines that may endanger operators.

- Operators should use care to avoid directly blasting power lines and insulators.
- Do not blast in atmospheres that contain flammable fumes.
- Take precautions at the work site to eliminate hazardous surface obstacles that may cause tripping hazards or interfere with worker mobility.
- Adequate ventilation must be provided for employees working within enclosures.
- Never operate compressor if hoses are frozen. When winter temperatures drop below freezing, check for ice prior to pressurizing hoses.
- Provide adequate drinking water for operators, especially during summer.

Personal Protective Equipment

- Secure hoses by tying them to scaffolding or personnel platforms, when working from elevations, to prevent injury from hoses falling on other personnel working below or near blasting area.
- Before using any blasting abrasive, check the MSDS to find out the chemical composition of the abrasive material.
- Equipment for the protection of eyes, face and body shall be supplied to the operator when the respirator design does not provide such protection and to any other personnel working in the vicinity of abrasive blasting operations. This equipment shall conform to the requirements of 1926.102 (Eye and Face Protection).
- Ventilation systems and dust collectors may be necessary in enclosed conditions.
- Noise from abrasive blast nozzles can be loud enough to damage the hearing of blasters and others on the work site. Workers must not be exposed to noise levels exceeding 80 decibels as an eight-hour time weighted average (80 dBA TWA), therefore all blasters shall wear earplugs.
- Blaster must wear heavy-duty gloves and steel toe boots.
- Helmet lenses should be changed as soon as pitting or frosting takes place.

Checklist

Abrasive Blasting Checklist

An abrasive blasting checklist must be completed prior to commencement of any abrasive blasting work. The checklist can be found at: www.iws.support/forms.

ABRASIVE BLASTING

Integrated Water Services, Inc.

(the Company)

Purpose

The purpose of this program is to provide safe guidelines for the operation and maintenance of abrasive blasting equipment and their related components for Integrated Water Services personnel.

Scope

This program covers all employees involved in abrasive blasting activities. Whenever hazardous substances such as dusts, fumes, mists, vapors, or gases exist or are produced in the course of construction work, their concentrations shall not exceed the limits specified in the "Threshold Limit Values of Airborne Contaminants – 1970" of the American Conference of Governmental Industrial Hygienists. When ventilation is used as an engineering control method, the system shall be installed and operated according to the requirements of CFR 1926.57 (Ventilation).

When work is performed by a subcontractor on a company site, the contractor's written safety program shall take precedence for their employees. However, subcontractors may adopt this procedure for their use.

Key Responsibilities

Supervisors

- Be aware of potentially hazardous conditions that may arise during the blasting process prior to starting any blasting job and must take measures to protect employees.
- Ensure that all employees are trained on related safety topics.
- Understand the importance of regularly scheduled maintenance for continued safe operation of blast equipment. Ensure that all employees comply with this policy and all other related policies.

Employees

- Be familiar with the safe operating functions of blasting equipment to be used on a job.
- Comply with all company policies.
- Have knowledge of hazards associated with respirable silica.
- Understand they are prohibited from using compressed air for cleaning unless the pressure is reduced to less than 30 pounds per square inch and be equipped with effective chip guarding and proper PPE.

Procedure

General

Abrasives and the surface coatings on the materials blasted are shattered and pulverized during blasting operations and the dust formed will contain particles of respirable size. The composition and toxicity of the dust from these sources shall be considered in making an evaluation of the potential hazards.

Dust shall not be permitted to accumulate on the floor or on ledges outside of an abrasive blasting enclosure. Dust spills shall be cleaned up promptly. Aisles and walkways shall be kept clear of steel shot or similar abrasives which may create a slipping hazard.

Equipment Handling

Follow these guidelines when moving blasting equipment to prevent back strains and crushing injuries:

- Use a forklift, crane or other type of lifting device for transporting a blast machine; always use a lifting device when the machine contains abrasive.
- Never manually move a blast machine where abrasive has been spilled on hard surfaces or on a wet or slippery surface.
- Never attempt to manually move a blast machine containing abrasive.
- Always disconnect hoses from machines to avoid interference during moving.

Air Compressors

- Air compressors must be located in a well-ventilated area. It must be able to contain large volumes of clean, toxicant-free air. This means the compressor must be placed up wind from the blasting operation and out of the range of dust and flying abrasives.
- Due to the high pressure that air compressors create, precautions must be taken to prevent unleashing of strong forces that can cause serious bodily injury.
- Air for abrasive blasting respirators must be free of harmful quantities of dust, mists, or noxious gases and must be inspected daily, prior to use and comply with CFR 1910.134(I) (Respiratory Protection).
- Never adjust the pressure setting on a compressor above the blast equipment maximum working pressure rating. The maximum working pressure rating is indicated on the manufacturer's metal identification plate.

Blast Pot

- Position blast pots and/or compressors on level ground. Machines operate best when they sit on level surfaces.
- For communication purposes place blast pot between the compressor and the surface to be blasted. This will enable the pot tender and operator to make visual contact.
- All couplings and pipefitting on the blast pot, compressor and hoses must be airtight.
- Blast pots must be inspected daily prior to use.

Hoses and Connectors

- Couplings must have safety wires in place and be secure as required by federal safety regulations. The operator shall be responsible to ensure that each coupling has safety wires in place.
- Whip checks must be installed at bull hose connections.
- Operator should hold onto the blast hose until the air pressure from the nozzle drops off to zero.
- Do not use hoses with soft spots.
- Never use tape to repair a blown-out hose.
- Immediately replace a hose if a blowout or leak occurs.
- Hose ends must come into contact with coupling gaskets to prevent leaks and to maintain static electricity conductivity.

Nozzles and Remote Controls

- Blast nozzles shall be bonded and grounded to prevent the buildup of static charges. Where flammable or explosive dust mixtures may be present, the abrasive blasting enclosure, the ducts, and the dust collector shall be constructed with loose panels or explosion venting areas, located on sides away from any occupied area, to provide pressure relief in case of explosion following the principles set forth in the National Fire Protection Association Explosion Venting Guide. NFPA 68-1954.

- Organic abrasives which are combustible shall be used only in automatic systems.
- Blast cleaning nozzles shall be equipped with an operating valve which must be held open manually. A support shall be provided on which the nozzle may be mounted when it is not in use.
- All blast machines must be equipped with remote control systems to start and stop the blasting process.
- Never tape, strap, or tie down an air actuated remote-control lever or choke electric remote-control switch.
- If there is the slightest delay in reaction time of the handle lever or lever lock to open, check for dust and dirt build-up around pivot pins before resuming blasting. Also, test the tension on the lever springs, and replace them immediately if they do not respond rapidly.
- Substituting component pieces with other manufacturer's parts is not allowed.
- Inspect blast nozzles for wear and cracks on the inner liner. When a nozzle orifice is worn 1/16" larger than its original size, it should be replaced.
- Check nozzles and nozzle holders for deterioration of thread form. Threads on nozzles and their companion holders must not be cross threaded, worn or distorted.
- Hoses that are being tied and lifted to blasting operations being conducted above grade, i.e., scaffolds, shall be depressurized to prevent accidental start-up.

Operator Signals

- On the job site, voice communication is often impossible. Even shouts cannot be heard over the noise of compressors and blasting. In addition, the operator's head will be enclosed in the helmet, which blocks out sound and limits vision. For these reasons, an industry wide standard set of hand and sound signals has been developed.
- Signals may be visual hand movements, flashing light, pulls on a rope or sounds made by banging a hammer or using a horn or electric buzzer.
- Every operator must become familiar with the signals to be used on the jobsite.

Respirator Use

- A specific work-site procedure must be added to the project Site Specific Safety Plan (SSSP) where respirators or blasting hoods/helmets are required to protect the health of the operator. The Company Respiratory Protection program shall be established wherever it is necessary to use respiratory protective equipment. Abrasive blasting respirators shall be worn by all abrasive blasting operators under certain qualifying conditions.
- Equipment for the protection of eyes, face and body shall be utilized by the operator when the respirator design does not provide adequate protection, and to any other personnel working in the vicinity of abrasive blasting operations. This equipment shall conform to the requirements of CFR 1926.102 (Eye and Face Protection).
- Equipment for protection of the eyes and face shall be by all personnel working in the vicinity of abrasive blasting operations.

Environmental Controls

- Organic abrasives which are combustible shall be used only in automatic systems. Where flammable or explosive dust mixtures may be present, the construction of the equipment, including the exhaust system and all electrical wiring, shall conform to the requirements of American National Standard Installation of Blower and Exhaust Systems for Dust, Stock, and Vapor Removal or Conveying, Z33.1-1961 (NFPA 91-1961), and Subpart S of 1926.57 (Ventilation).
- The work area must be inspected for exterior electrical power lines that may endanger operators.

- Operators should use care to avoid directly blasting power lines and insulators.
- Do not blast in atmospheres that contain flammable fumes.
- Take precautions at the work site to eliminate hazardous surface obstacles that may cause tripping hazards or interfere with worker mobility.
- Adequate ventilation must be provided for employees working within enclosures.
- Never operate compressor if hoses are frozen. When winter temperatures drop below freezing, check for ice prior to pressurizing hoses.
- Provide adequate drinking water for operators, especially during summer.

Personal Protective Equipment

- Secure hoses by tying them to scaffolding or personnel platforms, when working from elevations, to prevent injury from hoses falling on other personnel working below or near blasting area.
- Before using any blasting abrasive, check the MSDS to find out the chemical composition of the abrasive material.
- Equipment for the protection of eyes, face and body shall be supplied to the operator when the respirator design does not provide such protection and to any other personnel working in the vicinity of abrasive blasting operations. This equipment shall conform to the requirements of 1926.102 (Eye and Face Protection).
- Ventilation systems and dust collectors may be necessary in enclosed conditions.
- Noise from abrasive blast nozzles can be loud enough to damage the hearing of blasters and others on the work site. Workers must not be exposed to noise levels exceeding 80 decibels as an eight-hour time weighted average (80 dBA TWA), therefore all blasters shall wear earplugs.
- Blaster must wear heavy-duty gloves and steel toe boots.
- Helmet lenses should be changed as soon as pitting or frosting takes place.

Checklist

Abrasive Blasting Checklist

An abrasive blasting checklist must be completed prior to commencement of any abrasive blasting work. The checklist can be found at: www.iws.support/forms.

ASBESTOS PIPE COATING REMOVAL

Integrated Water Services, Inc.
(the Company)

Purpose

To provide information and instruction on the required precautions and protections for employees to avoid exposure to asbestos containing material when removing asbestos materials from pipe.

Scope

This program applies only to Integrated Water Services employees. Contractors who provide services that involve working with asbestos must do so using their own procedures.

When work is performed by a subcontractor on a company site, the contractor's written safety program shall take precedence for their employees. However, subcontractors may adopt this procedure for their use.

Key Responsibilities

Managers/Supervisors

- Prohibit Integrated Water Services employees or contractors from performing asbestos related tasks until they have been trained on this procedure.
- Ensure that all requirements of this procedure are understood and followed by those working under his/her direction.
- Perform duties of the competent person for asbestos work.

Competent Person

The competent person must make frequent and regular inspections of the job site, materials, and equipment. The competent person must be capable of performing or supervising the regulated area and have authorization to take prompt corrective actions to eliminate a hazardous condition or behavior.

All Employees

All employees and contractors are required to act in strict compliance with the requirements of this procedure and discontinue work if there is ever an unresolved concern regarding exposure to asbestos.

Procedure

6 mil thick polyethylene sheeting must be placed under the pipeline at all times during coating removal to collect any debris generated.

Integrated Water Services will adequately wet the pipeline coating with an amended water solution using a low-pressure garden style sprayer or other similar device to prevent any visible dust emissions during the coating removal process.

A utility knife or similar tool may be used to cut the coating into uniform squares. The objective of this activity is to prevent tearing or crumbling of the coating and to remove it intact in a non-friable condition.

The company prohibits the use of high-speed abrasive disks and compressed air as a means by which to remove the coating. These work practices are prohibited by OSHA's Asbestos Construction standard and should not be performed under any circumstances as doing so greatly increases the risk of airborne asbestos fiber exposure.

Integrated Water Services or the independent contractor shall ensure the use of vacuum cleaners equipped with HEPA filters to collect all debris generated by coating removal. The Company is not obligated to provide vacuum equipment for contractors use, this is the responsibility of the contractor. Vacuum cleaners equipped with HEPA filters must be used to collect all debris generated by coating removal and to decontaminate disposable clothing of workers and supervisors in the designated area upon exiting the regulated area.

Regulated Area

Site preparation shall include proper signage. In addition to establishing a perimeter around the regulated area. Warning signs must be posted around the regulated area in a sufficient number to identify the hazard.

Integrated Water Services shall prohibit eating, drinking, or smoking in a regulated area. Workers within the regulated or designated area must not eat, drink or smoke. These activities must be conducted outside of these areas to prevent accidental inhalation or ingestion of airborne asbestos fibers.

All employees and contractors who perform work in regulated areas are covered by this procedure. Employees who perform housekeeping activities during and after construction activities are also covered by this procedure.

Respiratory Protection and Personal Protective Equipment

Proper PPE for asbestos workers must include but not be limited to respirators, full body disposable suits, safety goggles and gloves.

PPE must be worn by all who enter the regulated area. The respirator may not be required following collection of air monitoring data by a competent person who demonstrates that exposures are below OSHA's Permissible Exposure Limit. Integrated Water Services must demonstrate a negative exposure assessment within the last 12 months or state asbestos containing pipe coating removal projects are and will be below the permissible exposure limit.

The respirator shall be provided at no cost to the employee and shall be selected in accordance with the Company Respiratory Protection Program and shall be a NIOSH approved device. Powered, air-purifying respirators shall be available when requested by the workers performing the removal, or if the hazard assessment process requires this type of system. contractors are responsible to provide their own respiratory protection, PPE, and associated equipment. Prerequisites for use of respiratory equipment, regarding asbestos, include:

- Successfully passing a respiratory physical
- Successfully completing annual respiratory protection training
- Successfully passing a respirator fit test

Waste Disposal

The adequately wet intact coating pieces should be placed into labeled asbestos waste bags. These bags should be air tight, puncture resistant, and labeled accordingly. These bags should only be half filled and closed at the end by a "goose-neck" method and sealed with duct tape.

Asbestos waste, scrap, debris, bags, containers, equipment, and contaminated clothing shall be collected and disposed of in sealed, labeled impermeable bags of greater than 6 mils thickness or other closed, labeled, impermeable containers.

Bags or containers shall be imprinted and clearly labeled with the following OSHA asbestos hazard warning and address:

DANGER
CONTAINS ASBESTOS FIBERS
AVOID CREATING DUST
CANCER AND LUNG DISEASE HAZARD
Site Address
Contractor's Name
Contractor's Address

Bags/containers shall be clearly labeled, for DOT, as: RQ, Asbestos, 9, NA2212, PG III

Containers shall have a DOT number 9 diamond label on the container if the shipping container is greater than 66 pounds. For assistance with DOT labeling requirements, contact the Integrated Water Services Safety Director.

Proper disposal of asbestos waste including but not limited to proper vehicle labeling and waste shipment records. Sealed, secured, and labeled containers of ACM waste must be removed and transported to a pre-arranged disposal location as soon as technically feasible. Vehicles used for transport should be labeled properly during loading and unloading. A waste shipment record must be maintained.

Record Keeping

All records relating to any asbestos activity shall be maintained permanently by the company who performed the removal.

The following records shall be maintained:

- Exposure Assessments that are being relied upon to support a location's position that asbestos work (specific or generic) will not result in exposures above the PEL or excursion limit.
- Employee asbestos exposure records (personnel air monitoring).
- Medical Surveillance records.
- Training records.
- Shipping papers and disposal records.
- Copies of notification letters sent to Governmental agencies.
- Pre-project asbestos sampling results.
- Post-project clearance sampling results.
- Daily Work Summaries.
- Project Completion Closure Report, if provided.

Training

Employees removing the coating (asbestos workers) will have both classroom and hands-on training from an approved training provider.

Asbestos worker training must consist of both classroom and hands-on training from an approved training provider consisting of, but not limited to the following elements:

- methods of recognizing asbestos,
- health effects of asbestos,
- respirator training,
- requirements for posting signs and hands on training for acceptable removal methods.

A certificate of training shall be provided and maintained.

BLOODBORNE PATHOGENS

Integrated Water Services, Inc.
(the Company)

Purpose

This Bloodborne Pathogen Exposure Control Plan has been established to ensure a safe and healthful working environment and act as a performance standard for all Integrated Water Services (the Company) employees and contractors. This program applies to all occupational exposure to blood or other potentially infectious materials. The content of this plan complies with OSHA Standard 29 CFR 1910.1030 (Occupational Exposure to Bloodborne Pathogens).

Scope

This program addresses all occupational exposure to blood or other potentially infectious materials exposure potentials at the Company. This plan applies to all employees and contractors while working in service to the Company.

When work is performed by a subcontractor on a company site, the contractor's written safety program shall take precedence for their employees. However, subcontractors may adopt this procedure for their use.

Key Responsibilities

Exposure Control Officer (Safety Director)
Has overall responsibility for developing and implementing the Exposure Control Procedure for all facilities.

Site Project Manager and Supervisors
Site project manager and supervisors are responsible for exposure control in their respective areas.

Employees

- Don't provide first aid to co-workers who are able to self-render first aid.
- Don't clean up the bodily fluids of another co-worker without proper training and personal protective equipment (PPE).
- Plan and conduct all operations in accordance with Company requirements.
- Develop good personal hygiene habits.

Procedure

Training
All employees will be trained in the basic requirements of bloodborne pathogens exposure and prevention. Training shall include:

- What bloodborne pathogens are and how to protect oneself from exposure.
- The OSHA requirements of bloodborne pathogens.

Availability of This Procedure to Employees
All employees and contractors will have access to a copy of this procedure by going to www.iws.support..

Exposure Determination

- At Integrated Water Services there are no job classifications in which any employees or contractors have occupational exposure to bloodborne pathogens that may result from the performance of their routine duties.

- Injuries are the only potential accidental exposures an employee of the Company could encounter. Employees are not allowed to clean up another employees release of bloodborne pathogens unless the donor employee is incapacitated and unable to clean their own biological spill. In such a case the cleaning employee shall be properly trained, follow this procedure, and use all required PPE.
- Rendering first aid or basic life support may expose employees or contractors to bloodborne pathogens and will require them to adhere to protection procedures as noted in this procedure. Although some designated employees and contractors may be trained to render first aid and basic life support, no employee is required to provide first aid if they choose not to do so.
- No medical sharps or similar equipment is provided to or should be used by employees or contractors rendering first aid or basic life support unless the role of that employee is that of an emergency care provider.

Methods of Compliance

Universal Precautions
Under circumstances in which the differential between body fluids and other non-biological fluids is difficult or impossible to discern, all fluids will be considered potentially infectious.

Engineering Controls
Hand washing facilities shall be readily available at all work locations. If provision of hand washing facilities is not feasible, then an appropriate antiseptic hand cleanser in conjunction with cloth/paper towels or antiseptic towelettes shall be provided by the Company.

Containers for contaminated reusable sharps are not provided for use by employees. Employees who use sharps for self-administration of medicine are required to dispose of the sharps in a way that presents no risk to other employees.

Work Practice Controls
- Employees shall wash their hands immediately, or as soon as feasible, after removal of potentially contaminated gloves or other personal protective equipment.
- Following any contact with bloodborne pathogens of another person, employees must wash their hands and any other exposed skin with soap and water as soon as possible.
- All equipment or environmental surfaces shall be cleaned and decontaminated after contact with blood or other infectious materials.
- Specimens of blood or other potentially infectious materials must be put in leak proof bags for handling, storage, and transport.
- Bloodborne pathogens kits are located on top of first aid kits and are to be used in emergency situations only. Once the seal is broken on a kit and any portion of the kit has been used, it is not to be reused.

Personal Protective Equipment
When the possibility of occupational exposure is present, PPE is to be provided at no cost to the employees such as gloves, gowns, etc. PPE shall be used by employees who clean up the biological release of another employee. All PPE shall be made readily accessible.

Our employees and contractors adhere to the following practices when using their personal protective equipment:
- Any garments penetrated by blood or other infectious materials are removed immediately.
- All potentially contaminated personal protective equipment is removed prior to leaving a work area.

- Gloves are worn whenever employees and contractors anticipate hand contact with potentially infectious materials or when handling or touching contaminated items or surfaces.
- Disposable gloves are replaced as soon as practical after contamination or if they are torn, punctured or otherwise lose their ability to function as an "exposure barrier".
- Masks and eye protection (such as goggles, face shields, etc.) are used whenever splashes or sprays may generate droplets of infectious materials.
- Any PPE exposed to bloodborne pathogens shall be disposed of properly.
- The Company will repair and replace PPE as needed to maintain its effectiveness.

Housekeeping

The Company employs the following practices:

- All equipment and surfaces are cleaned and decontaminated after contact with blood or other potentially infectious materials.
- Potentially contaminated broken glassware is picked up using mechanical means (such as dustpan and brush, tongs, forceps, etc.).

Post-Exposure and Follow Up

Post-Exposure Evaluation & Follow-Up

If there is an incident where exposure to bloodborne pathogens occurred, we immediately focus our efforts on investigating the circumstances surrounding the exposure incident and making sure that our employees receive medical consultation and immediate treatment. Contractors are required to arrange for their own medical consultation and treatment.

The Company Safety Director investigates every reported exposure incident and a written summary of the incident and its causes is prepared and recommendations are made for avoiding similar incidents in the future. We provide an exposed employee with the following confidential information:

- Documentation regarding the routes of exposure and circumstances under which the exposure incident occurred.
- Identification of the source individual if it is known and not in violation of HIPAA law.

Once these procedures have been completed, an appointment is arranged for the exposed employee with a qualified healthcare professional to discuss the employee's medical status. This includes an evaluation of any reported illnesses, as well as any recommended treatment.

Information Provided to the Healthcare Professional.

The Safety Director will forward the following information:

- A description of the exposure incident.
- The identity and contact information of the donor.
- Other pertinent information.

Healthcare Professional's Actions

The care provider will take the following actions:

- Interview the donor and ask lifestyle questions.
- Request a blood sample from the contamination donor.
- Test the donor blood sample for infectious diseases and other non-specified biological threats.

- Report back to the exposed employee, the Company, and the donor any actions that will be required.
- All findings or diagnoses will remain confidential and will not be included in a written report.

If the donor refuses to provide a blood sample for testing, the care provider will test the exposed employee's blood every week for six months.

Record Keeping
All records of employees shall be made available to OSHA's Assistant Secretary and the Director of OSHA for examination and copying upon request. It must be understood that Integrated Water Services will only maintain the records of employees and not those of contractors- it is expected that contractors will maintain their own records. The Company will not release medical records of any employee. The Company shall meet the requirements involving transfer of records set forth in 29 CFR 1910.1020(h).

The Company Human Resources department shall maintain Bloodborne Pathogen exposure records.

Accurate medical records for each employee with occupational exposure must be maintained for at least the duration of employment plus 30 years and shall include the following:

- Employee's name and Social Security number.
- Employee's Hepatitis B vaccination status, including vaccination dates.
- All results from examinations, medical testing, and follow-up procedures, including all health care professional's written statement on the exposure.
- Information provided to the health care professional by the Company.
- Any Hepatitis B Vaccine declinations.

Training records shall be maintained for 3 years from the date on which the training occurred and shall include at least the following:

- Outline of training program contents.
- Name of person conducting the training.
- Names and job titles of all persons attending the training.
- Date of training.

Labels and Signs
Biohazard warning labeling shall be used on containers of regulated waste, Sharps disposal containers, contaminated laundry bags and containers, contaminated equipment.

COLD WEATHER

Integrated Water Services, Inc.
(the Company)

Purpose

The purpose of this program is to address control measures to protect Integrated Water Services (the Company) employees from injuries or illness when working in cold temperatures.

Scope

This policy shall cover all Company employees when working in temperatures cold enough to cause injury.

Responsibilities

Safety Manager

- Implement and/or provide controls (engineering, administrative or personal protective equipment) to minimize cold stress where practicable.
- Provide training and education regarding cold stress, including early signs and symptoms of cold-related exposure.

Employee Responsibilities

- Identify and conduct a visual assessment of tasks where there is the potential for cold stress and then implement controls to protect from the cold.
- Adhere to all control measures or work procedures that have been designed and/or implemented to reduce exposure to conditions that could cause cold stress.
- Leave cold environments if signs or symptoms of cold-related injury occur.
- Wear all the required cold temperature protective clothing and PPE as appropriate for the actual and potential conditions.
- Immediately report any signs or symptoms of cold-related illness.

Cold Temperature Procedures

Health Effects of Cold Stress

Warning signs of hypothermia can include complaints of nausea, fatigue, dizziness, irritability, or euphoria. Workers can also experience pain in their extremities (hands, feet, ears, etc.), and severe shivering. Workers should be moved to a heated shelter and seek medical advice when appropriate.

Facilities

- Regularly used walkways and travel ways shall be sanded, salted, or cleared of snow and ice as soon as practicable.
- Employees must be knowledgeable of the dangers associated with working around unstable snow and ice build-ups both at and above walking and working surface, unstable snow build-up, sharp icicles and ice dams, and plan into their work how to prevent incidents caused by the same.
- When dangerous overhead build-ups of snow or ice are present, barricades will be used to prevent workers from walking or driving into potential danger zones.

Clothing, PPE, and Supplies

Proper cold weather protection must be worn by employees when working in cold, wet, and windy conditions. Protective clothing is the most important way to avoid cold stress. The type of fabric also makes a difference.

Cotton loses its insulation value when it becomes wet. Wool, silk, and most synthetics, on the other hand, retain their insulation even when wet. The following are recommendations (not requirements) for working in cold environments:

- Wear at least three layers of clothing. An inner layer of wool, silk or synthetic to wick moisture away from the body – a middle layer of wool or synthetic to provide Insulation even when hot - an outer wind and rain protection layer that allows some ventilation to prevent overheating.
- Wear a head cover or hood under your hardhat. Up to 40% of body heat can be lost when the head is left exposed.
- Keep a change of dry clothing available in case work clothes become wet.
- Except for the wicking layer, it is not good to wear tight clothing. Loose clothing allows better ventilation of heat away from the body.
- Do not underestimate the wetting effects of perspiration. Often times wicking and venting of the body's sweat and heat are more important than protecting from rain or snow.
- Wear proper footwear. Felt-lined, rubber bottomed, leather-topped boots with removable felt insoles are best suited for heavy work in cold since leather is porous and will allow the boots to "breathe" and let perspiration evaporate.
- Liner socks made from polypropylene will help keep feet dry and warmer by wicking sweat away from the skin. Always wear the right thickness of socks for your boots.
- Work clothing must be kept dry. Workers shall maintain a change of dry clothes in the event clothing becomes damp or wet in cold environments.

Preventative Controls That Are Implemented to Avoid Cold Induced Injuries

- Some preventive measures include drinking plenty of liquids, avoiding caffeine and alcohol.
- It is easy to become dehydrated in cold weather. If possible, heavy work should be scheduled during the warmer parts of the day.
- Take breaks out of the cold.
- Try to work in pairs to keep an eye on each other and watch for signs of cold stress.
- Avoid fatigue since energy is needed to keep muscles warm.
- Take frequent breaks and consume warm, high calorie food such as pasta to maintain energy reserves.
- If a worker exposed to cold shows signs or reports symptoms of cold stress or injury the worker must be removed from further exposure and treated by an appropriate first aid attendant, if available, or a medical care provider.
- For continuous work in temperatures below the freezing point, heated warming shelters such as vehicles, tents or cabins should be available. The work should be paced to avoid excessive sweating. If such work is necessary, proper rest periods in a warm area should be allowed and workers should change into dry clothes when work clothes dampen.
- New employees should be given enough time to get acclimatized to cold and protective clothing before assuming a full workload.
- For work below the freezing point, machines and tools should be designed so that they can be operated without having to remove mittens or gloves.

Training

Company employees who are required to work in cold weather conditions will receive initial and annual awareness training regarding the health effects of cold exposure and proper rewarming procedures. The following will constitute adequate training:

- Hypothermia occurs when body heat is lost faster than it can be replaced. When the core body temperature drops below the normal 98.6°F to around 95°F the onset of symptoms normally begins. The person may begin to shiver and stomp their feet to generate heat. Workers may lose coordination, have slurred speech and fumble with items in their hands. The skin will likely be pale and cold.

- Frostbite occurs when the skin freezes and loses water. In severe cases, amputation of the frostbitten area may be required. While frostbite usually occurs when the temperatures are 30°F or lower, wind chill factors can allow frostbite to occur in above freezing temperatures. Frostbite typically affects the extremities, particularly the feet and hands. The affected body part will be cold, tingling, stinging, or aching followed by numbness. Skin color tums red, then purple, then white and is cold to the touch. There may be blisters in severe cases.

- Trench Foot or immersion foot is caused by having feet immersed in cold water at temperatures above freezing for long periods of time. It is similar to frostbite but considered less severe. Symptoms usually consist of tingling, itching or a burning sensation. Blisters may be present.

- While working in the cold, a buddy system should be used. Look out for one another and be alert for the symptoms of hypothermia.

Training required by this program is available at the company solution center located at www.iws.support.

COMPRESSED GAS CYLINDERS

Integrated Water Services, Inc.
(the Company)

Purpose:

The purpose of this program is to prevent injury from failure of compressed gas cylinders and to establish requirements for handling, lifting and storing compressed gas cylinders safely.

Scope

This program covers all Company employees.

When work is performed by a subcontractor on a company site, the contractor's written safety program shall take precedence for their employees. However, subcontractors may adopt this procedure for their use.

Key Responsibilities

Managers/Supervisors

- Shall ensure that all employees are aware of the proper handling, storage and use requirements for compressed gas cylinders. Consultants are required to be independently knowledgeable of the same.
- Shall ensure that initial training is conducted for all new employees and that retraining is conducted when employee behaviors suggest that retraining is warranted. Awareness training is available at www.iws.support.

Employees

- Shall follow all requirements regarding the safe handling, storage and use of compressed gas cylinders.

Procedure

General

Cylinders shall not be accepted, stored or used if evidence of denting, bulging, pitting, cuts, neck or valve damage is observed. If damage is observed:

- The cylinder must be taken out of service.
- The cylinder's owner shall be notified to remove the cylinder from the premises.

Cylinder Identification

Gas identification shall be stenciled or stamped on the cylinder or a label used. No compressed gas cylinder shall be accepted for use that does not legibly identify its content by name.

Handling

Valve caps must be secured onto each cylinder before moving or storage.

Secure the cylinder in a blanket when being lifted by mechanical means. Slings, ropes or electromagnets are prohibited to be used for lifting compressed gas cylinders.

The preferred means to move compressed gas cylinders is with a cart, carrier or with a helper.

Compressed gas cylinders must not be allowed to strike each other.

When a cylinder cap cannot be removed by hand the cylinder shall be tagged "Do Not Use" and returned to the designated storage area for return to vendor.

Storing
All cylinders must be secured upright in a safe, dry, well-ventilated area that limits corrosion and deterioration.

- Cylinders must be secured by means that will prevent the cylinder from falling.
- When securing the cylinder, the restraints shall not be attached to electrical conduit or process piping.

Empty and non-empty cylinders shall be stored separately. All stored cylinders shall be capped.

Oxygen cylinders must be stored a minimum of 20 feet from combustible gas cylinders or areas where there may be open flame or arcing. Cylinders may also be stored where the oxygen is separated from combustible gas cylinders by a 5 foot or higher wall with a fire resistance rating of 30 minutes.

Storage areas for full and empty cylinders must be designated and labeled. Cylinders should be stored in definitely assigned places away from elevators, stairs or gangways.

Use
Cylinders must be equipped with the correct regulators. Regulators and cylinder valves should be inspected for grease, oil, dirt and solvents. Only tools provided by the supplier should be used to open and close cylinder valves.

- Never force or modify connections.
- Only regulators and gauges shall be used within their designated ratings.
- The use of a pressure-reducing regulator is required at the cylinder, unless the total system is designed for the maximum cylinder pressure.
- Valves must be closed when cylinders are not in use.
- Cylinders shall not be used as rollers or supports.
- Cylinders shall not be placed where they can come in contact with electrical circuits.
- Cylinders must be protected from sparks, slag or flame from welding, burning or cutting operations.
- Empty cylinders must be returned to designated storage areas as soon as possible after use.

Inspection of Compressed Gas Cylinders
Site supervision shall determine that compressed gas cylinders under project control are in a safe condition and properly stored and handled. Visual and other inspections shall be conducted as prescribed in the Hazardous Materials Regulations of the Department of Transportation (49 CFR parts 171-179 and 14 CFR part 103). Where those regulations are not applicable, visual and other inspections shall be conducted in accordance with Compressed Gas Association Pamphlets C-6-1968 and C-8-1962. Some elements include, but are not limited to:

- Hoses and connections should be inspected regularly for damage. Hoses should be stored in cool areas and protected from damage.
- Tank inspections and testing must be documented and visibly marked on the cylinder by the owner.

High Pressure Cylinders are those cylinders marked for service pressures of 900 psi and greater.

High pressure cylinders shall be taken out of service and submitted for re-qualification testing when any of the following conditions are identified by visual inspection:

- Cuts, dings, gouges, dents bulges, pitting, neck damage or evidence of exposure to fire.
- The cylinders shall be inspected and retested according to the requirements stated in 49 CFR 180.205 and .209.
- Re-qualification of non-damaged cylinders shall be conducted per the schedule in 49 CFR 180.209.

Low Pressure Cylinders are those cylinders marked for service pressures of less than 900 psi.

- Low pressure cylinders fall into two categories, those requiring requalification and those that do not require re-qualification.
- Low pressure cylinders that do not require re-qualification shall be taken out of service and condemned when any of the following conditions are identified during inspection:
- The tare weight of the cylinder is less than 90% of the stamped weight of the cylinder.
- Observed pitting, dents, cuts, bulging, gouges, or evidence of exposure to fire.
- Low pressure cylinders subject to re-qualification shall be taken out of service, inspected and retested when visual inspection identifies any of the following conditions: dents, bulges, pitting or neck damage.
- Re-qualification of non-damaged cylinders shall be conducted per the schedule in 49 CFR 180.209.

Leaking Cylinders

Leaking cylinders should be moved promptly to an isolated, well-ventilated area, away from ignition sources. Soapy water should be used to detect leaks. If the leak is at the junction of the cylinder valve and cylinder, do not try to repair it. Contact the supplier and ask for response instructions.

Transportation

Cylinders must be transported in a vertical secured position using a cylinder basket or cart and must not be rolled. Regulators should be removed, and cylinders capped before movement. Cylinders should not be dropped or permitted to strike violently. Protective caps shall not be used to lift cylinders.

Empty Cylinder Marking

Empty cylinders must be handled as carefully as when filled.

Engineering Controls

Engineering controls such as emergency shutoff switches, gas cabinets and flow restrictors should be used wherever possible to control hazards. Emergency eyewash facilities should be present where corrosive gases or materials are used.

CONFINED SPACE

Integrated Water Services, Inc.
(the Company)

Purpose

The purpose of this program is to communicate the minimum safety requirements required of all employees and contractors performing confined space activities while working or contracting to Integrated Water Services, Inc. (IWS). Contractors should follow their written confined space entry procedures. Contractor requirements should at a minimum, meet the requirements of this procedure.

Scope

This program applies to all employees and other workers that may be involved in confined space entry on an IWS jobsite. When work is performed on a non-owned or operated site, the client's program shall take precedence, unless the client's program doesn't exist or is less stringent.

When work is performed by a subcontractor on a company site, the contractor's written safety program shall take precedence for their employees. However, subcontractors may adopt this procedure for their use.

Definitions

Acceptable entry conditions: the conditions that must exist in a confined space to allow entry and to ensure that employees involved with a confined space entry can safely enter into and work within the space.

Attendant: an individual stationed outside one or more Confined spaces who monitors the authorized Entrants and who performs all Attendant's duties assigned in the Integrated Water Services Confined Spaces Program. Attendants must have sufficiently completed and fully understands the Confined Space training and is approved by the HSE Manager to work in a confined space as an Attendant.

Authorized Entrant: an individual who is authorized by Integrated Water Services to enter a confined space. Entrants must have sufficiently completed and fully understands the Confined Space training and is approved by the HSE Manager to work in a confined space as an Authorized Entrant.

Blanking or Blinding: the absolute closure of a pipe, line, or duct by the fastening of a solid plate (such as a spectacle blind or a skillet blind) that completely covers the bore and that is capable of withstanding the maximum pressure of the pipe, line, or duct with no leakage beyond the plate.

Confined Space:

- A space that is large enough and so configured that an employee can bodily enter and perform assigned work.
- Has limited or restricted means for entry or exit (for example, tanks, vessels, coolers, storage bins, hoppers, vaults, and pits are spaces that may have limited means of entry), and
- Is not designed for continuous occupancy.

Double block and bleed: the closure of a line, duct, or pipe by closing and locking or tagging two in-line valves and by opening and locking or tagging a drain or vent valve in the line between the two closed valves.
Emergency - any occurrence (including any failure of hazard control or monitoring equipment) or an event internal or external to the confined space that could endanger Entrants.
Engulfment: the surrounding and effective capture of a person by a liquid or finely divided (flowable) solid substance that can be aspirated to cause death by filling or plugging the respiratory system or that can exert enough force on the body to cause death by strangulation, constriction, or crushing.
Entry: the action by which a person passes through an opening into a confined space. Entry includes ensuing work activities in that space and is considered to have occurred as soon as any part of the Entrant's body breaks the plane of an opening into the space.

Entry permit: means the written or printed document that is provided by Integrated Water Services to allow and control entry into a confined space that contains the information specified in this program.

Entry Supervisor: the person responsible for determining if acceptable entry conditions are present at a confined space where entry is planned, for authorizing entry and overseeing entry operations, and for terminating entry as required by this section.

- Entry Supervisors must have sufficiently completed and fully understands the Confined Space training and is approved by the HSE Manager to work in a confined space.
- An Entry Supervisor also may serve as an Attendant or as an authorized Entrant, as long as that person is trained and equipped as required by this section for each role he or she fills. Also, the duties of Entry Supervisor may be passed from one individual to another during the course of an entry operation.
- The Entry Supervisor is responsible to test and monitor the atmosphere conditions.

Hazardous atmosphere: an atmosphere that may expose employees to the risk of death, incapacitation, and impairment of ability to self-rescue (that is, escape unaided from a confined space), injury, or acute illness from one or more of the following causes:

- Flammable gas, vapor, or mist in excess of 10 percent of its lower flammable limit (LFL), (0% is normal).
- Atmospheric oxygen concentration below 19.5 percent or above 23.5 percent, (20.9 % is normal).
- Any other atmospheric condition that is immediately dangerous to life or health. (Ex.-H2S 10%, 0% is normal).
- Note: For air contaminants for which OSHA has not determined a dose or permissible exposure limit, other sources of information, such as Safety Data Sheets that comply with the Hazard Communication Standard, published information, and internal documents can provide guidance in establishing acceptable atmospheric conditions.

Hot work permit: the written authorization to perform operations (for example, riveting, welding, cutting, burning, and heating) capable of providing a source of ignition.

Immediately dangerous to life or health (IDLH): any condition that poses an immediate or delayed threat to life or that would cause irreversible adverse health effects or that would interfere with an individual's ability to escape unaided from a confined space.

- Note: Some materials -- hydrogen fluoride gas and cadmium vapor, for example -- may produce immediate transient effects that, even if severe, may pass without medical attention, but are followed by sudden, possibly fatal collapse 12-72 hours after exposure. The victim "feels normal" from recovery from transient effects until collapse. Such materials in hazardous quantities are considered to be “immediately dangerous to life or health”.

Inerting: the displacement of the atmosphere in a permit space by a non-combustible gas (such as nitrogen) to such an extent that the resulting atmosphere is non-combustible. This procedure produces an IDLH oxygen deficient atmosphere.

Isolation: the process by which a confined space is removed from service and completely protected against the release of energy and material into the space by such means as: blanking or blinding; misaligning or removing sections of lines, pipes, or ducts; a double block and bleed system; lockout or tagout of all sources of energy; or blocking or disconnecting all mechanical linkages.

Line Breaking: the intentional opening of a pipe, line, or duct that is or has been carrying flammable, corrosive, or toxic material, an inert gas, or any fluid at a volume, pressure, or temperature capable of causing injury.

Non-Permit Confined Space: A confined space that does not contain or, with respect to atmospheric hazards, have the potential to contain any hazard capable of causing death or serious physical harm.

Oxygen deficient atmosphere: an atmosphere containing less than 19.5 percent oxygen by volume.

Oxygen enriched atmosphere: an atmosphere containing more than 23.5 percent oxygen by volume.

Permit-Required Confined Space: a confined space that has one or more of the following characteristics:

- Contains or has a potential to contain a hazardous atmosphere.
- Contains a material that has the potential for engulfing an Entrant.
- Has an internal configuration such that an Entrant could be trapped or asphyxiated by inwardly converging walls or by a floor which slopes downward and tapers to a smaller cross-section.
- Contains any other recognized serious safety or health hazard.

Permit system: the employer's written procedure for preparing and issuing permits for entry and for returning the confined space to service following termination of entry.

Prohibited condition: any condition in a confined space that is not allowed by the permit during the period when entry is authorized.

Rescue service: the personnel designated to rescue employees from Permit-Required Confined Spaces.

Retrieval system: the equipment (including a retrieval line, chest or full-body harness, wristlets, if appropriate, and a lifting device or anchor) used for non-entry rescue of persons from confined spaces.

Testing: the process by which the hazards that may confront Entrants of a confined space are identified and evaluated. Testing includes specifying the tests that are to be performed in the permit space.

Responsibilities

Managers and Supervisors

- Shall ensure that all employees have been trained and fully understand the requirements of this program.
- Shall provide the necessary equipment to comply with these requirements and ensure that all employees are trained on its use.
- Shall ensure that all confined space permit has been completed.
- Shall ensure that provisions and procedures are in place for the protection of employees from external hazards including but not limited to pedestrians, vehicles, and other threats via the use of the pre-entry checklist that verifies that conditions in and around the permit space are acceptable for entry.
- Shall ensure that all Permit-Required Confined Spaces permits are posted or electronically shared at the place the work is being performed.
- Shall ensure that all confined spaces that have been identified as “no entry” have signs that state, “DANGER- DO NOT ENTER”.
- Shall ensure signs have been posted at all Permit-Required Confined Space areas that state, “CONFINED SPACE”.

Affected Employee

- Shall attend Confined Space Entry training commensurate with their duties and when duties change as required.
- Shall comply with all aspects of this program.
- Authorized Entrants, Attendants, and Entry Supervisors may be any Integrated Water Services employee or contractor that is authorized by management to supervise or work in a confined space. All involved workers must be trained and demonstrate that they are proficient in the understanding of the program requirements.

Authorized Entry Supervisor Duties

- Shall have a tailgate safety meeting with all workers involved in the confined space entry and review the job to be performed and the safety concerns that may be present.
- Shall confirm that energy isolation has been accomplished and tested prior to entry into a confined space.
- Shall ensure that the requirements of this program are followed and maintained at all times.
- Shall test all atmosphere conditions prior to and during entry and shall complete and maintain the confined space permit form and have it accessible for review on the job site at all times.
- If the confined space poses a hazard that cannot be eliminated, the Entry Supervisor must arrange for a rescue services.
- If the confined space can be made to pose no hazards to the Entrants, the Entry Supervisor can reclassify the confined space to a Non-Permit Confined Space.
- A stand-by rescue team is not required to be on site for Non-Permit Confined Space entries.

Authorized Attendant Duties

- Understand the hazards that may be faced during entry, including information on the mode, signs or symptoms, and consequences of the exposure.
- Is aware of possible behavioral effects of hazard exposure to authorized Entrants.
- Continuously maintain communication and an accurate count of authorized Entrants in the confined space.
- Remain outside the confined space during entry operations and not leave their station unless relieved by another qualified Attendant.
- Integrated Water Services has procedures to be used by a single attendant monitoring several confined spaces **during an emergency**. If more than one confined space is to be monitored by a single attendant, the program must include the means and procedures that will be used in order to enable the attendant to respond to emergencies in the spaces they are monitoring, without distraction from all required responsibilities. This will include radio communications with emergency responders or other methods of summoning aid, directing entrants to leave the confined spaces, etc. The procedures shall be noted on the confined space entry permit in the Notes section.
- Monitor activities inside and outside the confined space to determine if it is safe for Entrants to remain in the space and orders the authorized Entrants to evacuate the confined space immediately under any of the following conditions:
    - If the Attendant detects a prohibited condition
    - If the Attendant detects the behavioral effects of hazard exposure in an authorized Entrant
    - If the Attendant detects a situation outside the space that could endanger the authorized Entrants
    - If the Attendant cannot effectively and safely perform all the duties required of them
- Summon rescue and other emergency services as soon as the Attendant determines that authorized Entrants may need assistance to escape from confined space hazard(s).
- Take the following actions when unauthorized person(s) approach or enter a confined space while entry is underway:
    - Warn the unauthorized persons that they must stay away from the confined space
    - Advise the unauthorized persons to exit the confined space immediately, if they have entered the space
    - Inform the authorized Entrants and the Entry Supervisor if unauthorized persons have entered the confined space

- Perform no duties that might interfere with the Attendant's primary duty to monitor and protect the authorized Entrants.
- Authorized Attendants shall not monitor more than one confined space at a time.

Authorized Entrant Duties

- Knows the hazards that may be faced during entry, including information on the mode, signs or symptoms, and consequences of entrant exposure.
- Uses appropriate personal protective equipment properly, e.g., face and eye protection, and other forms of barrier protection such as gloves, aprons, coveralls, and breathing equipment.
- Is aware of possible behavioral effects of hazard exposure in authorized Entrants.
- Shall witness and verify calibrated air monitoring data and if approved sign off before entry is made.
- Is entitled to request additional monitoring at any time.
- Maintain communication with the Attendants to enable the Attendant to monitor the Entrants status as well as to alert the Entrant to evacuate if needed, and
- Exit from confined spaces as soon as possible when: ordered by an Attendant or Entry Supervisor; when the Entrant recognizes the warning signs or symptoms of an exposure; when a prohibited condition exists, when an alarm is activated.

Procedure

Hazard Assessment

Every Confined Space Entry required a Hazard Assessment. The Safety Support Ticket located at www.iws.support in the Forms tab is the Company designated Hazard Assessment form for all high risk activities including Confined Space Entry.

Non-Permit Confined Space Entry

If testing of the confined space atmosphere is within acceptable limits without the use of forced air ventilation and the space is properly isolated, the space can be entered by following the requirements for Level I confined space entry.

- Entrants and/or their representative shall be given the opportunity to observe and participate in the air monitoring process.
- Entrants shall review and sign the confined space permit.
- Entrants may not use equipment designated by the manufacturer solely for emergency retrieval (such as rescue tripods) for routine entry or retrieval. Only personnel hoist systems designed for regular entry and retrieval are permitted.

Employees may enter and work in the confined space as long as LEL, O2, and toxicity hazards remain at safe levels, and they do the following:

- Complete the Integrated Water Services Confined Space Entry Permit to document that there are no confined space hazards. Make this certification available to all personnel entering the space.
- A trained Attendant must always be outside the confined space.
- The Attendant must monitor the authorized Entrants for the duration of the entry operation.
- Atmospheric conditions must be monitored.
- Entrants may not use equipment designated by the manufacturer solely for emergency retrieval (such as rescue tripods) for routine entry or retrieval. Only personnel hoist systems designed for regular entry and retrieval are permitted.

Exception: The Attendant requirements for Level I confined space entry may be exempted, if a job hazard assessment is performed and has determined that there are no inherent dangers to allow single person entry. The following conditions apply to this exemption:

- This provision is intended to permit field operations to enter crankcases, shallow valve boxes, cellars, excavations, etc. without an Attendant being present. It is conditional in that all aspects of the Non-Permit Required Confined Space Entry Permit have been complied with.
- When there are changes in the use and configuration of a confined space that might increase the hazards to the Entrants (e.g., using epoxy coating, welding, painting, etc.), the space must be re-evaluated. If hazards have appeared, reclassify the space as a Permit-Required Confined Space.
- Continuously monitor the confined space atmosphere to ensure that it is still safe.
- The space must not contain a hazardous atmosphere while personnel are inside.
- Ensure that vehicle or other equipment exhaust does not enter the space.
- If a hazardous atmosphere is detected during an entry, personnel must immediately evacuate the space and re-evaluate the space to determine how the hazardous atmosphere developed
    - the Entry Supervisor shall cancel the entry permit
    - take action to protect personnel before any subsequent activity to re-enter the space takes place
    - reissue the Integrated Water Services Confined Space Entry Permit before allowing Entrants to re-enter the space
    - if necessary, reclassify the space as a Permit-Required Confined Space

Permit-Required Confined Space Entry

If the space is properly isolated and results of air monitoring are above acceptable parameters without local exhaust ventilation in operation, classify the entry as a Permit-Required Confined Space.

- Complete the Integrated Water Services Confined Space Entry Permit before proceeding with work in a Permit-Required Confined Space. The permit is located at www.iws.support/permits.
- Entrants shall be given the opportunity to observe and participate in the permitting and air monitoring process.
- Entrants shall review and sign the confined space permit.
- At least one trained Attendant must always be outside the Permit-Required Confined Space.
- The Attendant must monitor the authorized Entrants for the duration of the entry operation.
- Only authorized Entrants may enter a Permit-Required Confined Space.
- All Entrants must sign in and out on the entry permit when entering and leaving a Permit-Required Confined Space. the electronic permit does have a field for this purpose.
- Conditions must be continuously monitored where Entrants are working to determine that acceptable conditions are maintained during entry.
- If a hazardous atmosphere is detected during an entry, personnel must immediately evacuate the space.
    - The Entry Supervisor shall cancel the entry permit.
    - Re-evaluate the space to determine how the hazardous atmosphere developed.
    - Take action to protect personnel before any subsequent activity to re-enter the space takes place.
    - Re-issue the Integrated Water Services Confined Space Entry Permit before allowing Entrants to re-enter the space.
    - Employees are entitled to request additional monitoring at any time.

- The permit must be terminated when the entry operations are complete or when permit conditions change (i.e., hazardous air monitoring results are noted, unsafe behaviors are observed, etc.).
- The minimum rescue equipment required for Permit-Required Confined Space entry is covered in the Rescue & Emergency section of this program.
- Permit-Required Confined Space entry operations will be reviewed when Integrated Water Services believes that the requirements of this confined space entry program may not be adequate protect personnel.
- If deficiencies are found in the program, the program will be revised, and personnel will be trained in the new revisions before subsequent entries are authorized.

Pre-Job Planning and Space Preparation

- The Entry Supervisor must determine that the confined space is properly isolated by blinding, disconnecting, and/or by following the Lockout/Tagout procedures.
- The Entry Supervisor must discuss with all Entrants the hazards of the space, communication methods, and emergency procedures during the confined space entry.
- Eliminate any condition making it unsafe to open the equipment to the atmosphere.
- Promptly guard the opening to prevent an accidental fall through the opening and to protect each employee working in the space from foreign objects entering the space.
- If applicable, the crew must wash, steam, ventilate, or degas the confined space to properly free it of possible contaminants. Vapors must be vented to a safe location.
- Do not allow unauthorized personnel to enter a confined space. Barricade and/or guard all confined spaces to prevent entry of unauthorized Entrants.
- If performing hot work in the confined space, special precautions must be taken consistent with the Integrated Water Services Hot Work Permit procedure.
- Ensure that vehicle or other equipment exhaust does not enter the space.

Pre-Entry Safety Meeting

The Entry Supervisor must declare when the confined space is ready for entry.

The Entry Supervisor shall hold a pre-entry safety meeting to discuss all requirements and procedures with all authorized Entrant(s) and Attendant(s) involved with the entry. He/she will discuss other concerns such as previous contents, vessel coating, PPE required, etc.

The Entry Supervisor must coordinate entry operations when employees of more than one company are working simultaneously in the confined space. This coordination is necessary so that one company's work does not endanger the employees of another company.

Equipment

Check all work equipment to ensure that it has the proper safety features and is approved for the locations where it will be used. The Entry Supervisor shall ensure that all equipment is properly maintained in a safe condition and that Entrants use the equipment properly.

The following equipment must be considered and may be required when entering a confined space:

- Atmospheric Testing and Monitoring Equipment.
- Communications Equipment – Only use intrinsically safe equipment in areas where an explosive atmosphere may exist. Use a communication system that will keep the Attendant in constant, direct

communication with the Entrant(s) working in the confined space. Also, use a communication system that allows the Attendant to summon help from rescue or emergency service.

- Entry and Exit Equipment – (For example: ladders may be needed for safe entry and exit).
- Lighting Equipment – Needed for safe entry, work within the space and exit. Lighting equipment used in the confined space must be certified safe for the location.
- Portable electric lighting used in wet and/or other conductive locations (drums, tanks, vessels) must be operated at 12 volts or less. 120 volt lights may be used if protected by a ground-fault circuit interrupter.
- Personal Protective Equipment – Ensure that personnel wear the required personal protective equipment. For respiratory protection requirements, refer to the Respiratory Protection Program.
- Rescue and Emergency Equipment – Except if provided by outside rescue services.
- The Attendants must also have an approved first aid kit.
- Vacuum Trucks – When used, trucks must be properly grounded or bonded to prevent static sparks.
- Ventilating Equipment – Local exhaust air movers used to obtain acceptable atmospheric entry conditions (e.g., Copus air movers).
- Other – Any other equipment necessary for safe entry into and rescue from permit required confined spaces.

Air Monitoring

- Before an employee enters the space, the internal atmosphere shall be tested, with a calibrated direct-reading instrument, for oxygen content, for flammable gases and vapors, and for potential toxic air contaminants, in that order. Monitoring of the space must inform the entrants of the potential hazards and results and they must participate in the permit review and signing.
- Air shall be periodically tested while continuous ventilation is applied.
- Any employee, who enters the space, or that employee's authorized representative, shall be provided an opportunity to observe the pre-entry testing required by this paragraph.
- Employees are entitled to request additional air monitoring at any time.

Ventilation

Continuous forced air ventilation must be used and tested as follows:

- An employee may not enter the space until the forced air ventilation has eliminated any hazardous atmosphere.
- The forced air ventilation shall be so directed as to ventilate the immediate areas where an employee is or will be present within the space and shall continue until all employees have left the space.
- The air supply for the forced air ventilation shall be from a clean source and may not increase the hazards in the space.
- The atmosphere within the space shall be periodically tested as necessary to ensure that the continuous forced air ventilation is preventing the accumulation of a hazardous atmosphere. Any employee, who enters the space, or that employee's authorized representative, shall be provided with an opportunity to observe the periodic testing and may request additional monitoring at any time.
- If a hazardous atmosphere is detected during entry each employee shall leave the space immediately and the space shall be evaluated to determine how the hazardous atmosphere developed.

Multiple Employer Procedure

In order not to endanger the employees of any other employer, the Entry Supervisor shall:

- Verify that all contractor employees have been trained in confined space and that all contractor employees fully understand the Integrated Water Services procedures pertaining to Confined Space.

- Inform the contractor that the workplace contains permit spaces and that permit space entry is allowed only through compliance with a permit space program meeting the requirements of this section.
- Apprise the contractor of the elements, including the hazards identified and the employees experience with the space, that make the space in question a permit space.
- Inform the contractor of any precautions or procedures that Integrated Water Services has implemented for the protection of employees in or near permit spaces where contractor personnel will be working.
- Coordinate entry operations with the contractor, when both Integrated Water Services personnel and contractor personnel will be working in or near confined spaces.
- Debrief the contractor at the conclusion of the entry operations regarding the permit space program followed and regarding any hazards confronted or created in confined spaces during entry operations.
- In addition to complying with the confined space requirements that apply to all employees; each contractor, who is retained to perform permit space entry operations, shall:
    - Obtain any available information regarding confined space hazards and entry operations from the Integrated Water Services Entry Supervisor.
    - Coordinate entry operations with the Integrated Water Services Entry Supervisor, when both Integrated Water Services personnel and contractor personnel will be working in or near permit spaces.
    - Inform Integrated Water Services of the confined space program that the contractor will follow and of any hazards confronted or created in the confined space, either through a debriefing or during the entry operation.

Rescue and Emergency Services

General

Rescue service must be on-site for immediately dangerous to life and health (IDLH) conditions while work is being performed. Rescue services must be either:

- Provided by the host facility,
- Provided by an outside, or
- The Attendant shall order the other Entrants not to move the injured nor allow untrained or unauthorized workers into the space that are not trained to handle a confined space rescue.
- Safety Data Sheet's for substances that an injured Entrant was exposed to must be provided to the medical facility treating the injured worker.

Permit-Required Confined Space Rescue:

- When the Attendant becomes aware of the need for rescue, the Attendant shall immediately summon the onsite rescue team by the agreed upon communication method, verbally, radio or cell phone, without leaving the vicinity of the confined space.
- The Attendant shall prevent unauthorized personnel from attempting a rescue.
- After the rescue team has been notified, the Attendant shall alert the Entry Supervisor of the emergency via the same communication methods.
- The preferred means of providing rescue service is through the use of a qualified outside rescue service vendor (client host). The outside rescue service vendor must be:
    - Informed of the hazards that they may confront during a rescue.
    - Provided access to the Permit-Required Confined Space to examine the entry site, practice rescue, and decline as appropriate.

  - Access to the space allows the rescue service and local supervision to jointly develop appropriate rescue plans.
  - If the host client is designated to provide rescue services for Integrated Water Services, the agreement of services must be included in the job contract.

- If Integrated Water Services employees are to perform Permit-Required Confined Space rescues, they must be:
  - Provided and trained in the use of the proper personal protective equipment necessary to make the rescue.
  - Provided PPE at no cost.
  - Trained to perform the assigned rescue duties.
  - Required to practice making rescues at least once every 12 months.
  - Trained in basic first aid and CPR.
  - A minimum of one member of the rescue team must hold a current certification in first aid and CPR.

Non-entry Rescue

- To facilitate non-entry rescue, an Entrant must be attached to a retrieval system whenever he/she enters a Permit-Required Confined Space with a vertical depth of more than 5 feet.
- The retrieval equipment is not required if it will increase the overall risk of the entry, e.g., creating an entanglement hazard, or will not contribute to the rescue of the Entrant.
- Each Entrant shall use a full body harness equipped with a "D" ring located between the shoulders or above the head.
- Wristlets may be used instead of the full body harness, if the use of the full body harness is not feasible or creates a greater hazard *and* that using wristlets is the safest and most effective alternative.
- The retrieval line must be attached to the "D" ring and the other end of the retrieval line attached to a retrieval device or fixed point located outside the space so that rescue can begin as soon as the rescuer becomes aware that rescue is necessary.

Issuance/Reviewing of Permit

Only when all pre-entry requirements are satisfied, the Entry Supervisor shall issue a completed and signed confined space permit. The confined space permit is valid for one shift.

In the event of any unauthorized entry, employee complaints, a hazard not covered by the permit, the occurrence of an injury or near miss, the entry permit shall be cancelled and a review shall be conducted to provide employee protection and for revising the program prior to authorizing subsequent entries.

An annual review of this program, using the cancelled permits retained within 1 year after each entry shall be conducted by the Safety Director to revise the program as necessary, to ensure that employees are protected. If no confined space entries were performed during a 12-month period, no review is necessary.

Termination and Closing or Cancelling of Permits

The Entry Supervisor shall terminate the confined space permit, at the end of the job operation, at the end of the shift or when the Entry Supervisor or Attendant determine that conditions in or near the confined space have changed and is hazardous to the Entrants.

The Entry Supervisor shall, at the conclusion of entry operation, close out the permit.

Training

Training shall be provided so that all employees whose work is regulated by this program acquire the understanding, knowledge, and skills necessary for the safe performance of the duties assigned to them.

Training shall be provided to each affected employee before the employee is first assigned duties under this program including if a new hazard has been created or special deviations have occurred and before there is a change in assigned duties.

The employee shall be retrained:

- Whenever there is a change in confined space operations that presents a hazard about which an employee has not previously been trained.
- Whenever the supervisor has reason to believe either that there are deviations from the permit space entry procedures required by this section or that there are inadequacies in the employee's knowledge or use of these procedures.
- Whenever an employee has been observed ignoring the requirements of this program.

The training shall establish employee proficiency in the duties required by this program and shall introduce new or revised procedures, as necessary.

The supervisor shall certify that the training required by this program has been accomplished.

- The certification shall contain each employee's name, the signatures or initials of the trainers, and the dates of training.
- The certification shall be available for inspection by employees, management, clients, and regulators.

Confined Space Entry Permits

A confined space entry permit must be completed anytime a permit required or non-permit required confined space is entered by any person. Both the Confined Space Entry Permit, and the Non-Permit Required Confined Space Entry Permit can be found at the following location: www.iws.support/forms.

-

CRANES

Integrated Water Services, Inc.
(the Company)

Purpose

The purpose of this program is to outline the procedures for safe operations and the training requirements regarding crane and lifting devices, including all rigging design, construction, installation, maintenance, and safely performance.

Scope

This program applies to all Company employees who operate overhead cranes, hoists, and rigging equipment in the scope of their employment duties and assignments. Third party contractors hired to provide crane services with their own equipment must provide their own policies and procedures. Contractors who are hired to operated a Company owned crane may use this policy.

When work is performed by a subcontractor on a company site, the contractor's written safety program shall take precedence for their employees. However, subcontractors may adopt this procedure for their use.

Key Responsibilities

Managers and Supervisors

- Ensure only appropriately trained, qualified, and certified operators operate lifting and hoisting equipment.
- Establish and maintain a daily, monthly, and annual inspection program.
- Establish a recordkeeping log for safety checks, maintenance, and repairs.
- Are responsible for ensuring that employees and contractors are trained and qualified on the proper operations of the equipment and have been trained in rigging safety by a competent person.
- Are responsible to see that all provisions of this program are followed and that rigging inspections are performed, and the equipment is in safe operating condition.

Riggers & Operators

- Employees are responsible for inspecting the equipment they are using and reporting any observable wear, needed repairs, or damage to their supervisor.
- Shall report all equipment malfunctions immediately.
- Employees are responsible for following the requirements of this program.

Procedure

Operating controls shall be plainly marked to indicate the direction of travel.

All manufacturer procedures applicable to the operational function of equipment must be complied with. All manufacturer procedures applicable to the operational functions of equipment, including its use with attachments, must be complied with.

Procedures applicable to the operation of the equipment shall be readily available at all times.

The operator shall have ready access to procedures applicable to the operation of the equipment. Procedures include rated capacities (load charts), recommended operating speeds, special hazard warnings, instructions, and the operator's manual.

Operator Qualifications and Certifications

Only those operators qualified by training or experience shall be allowed to operate equipment and machinery. Operators shall be qualified and certified by one of the following methods:

- Certification by an accredited crane operator testing organization.
- Qualification by an audited employer program.
- Qualification by the U.S. military.
- Licensing by a government entity.

Exemptions:

- Operators of derricks (see §1926.1436), side boom cranes (see §1926.1440), or equipment with a maximum manufacturer-rated hoisting/lifting capacity of 2,000 pounds or less (see §1926.1441) are not required to comply with §1926.1427 operator certification requirements.
- An operator in training may operate a crane only under the direct supervision of a trained and certified operator.

Load Chart

Each hoist shall have a legible load chart showing the rated capacity in all permitted working positions and configurations of use, manufactures name, model, serial number and year of manufacture or shipment date permanently marked or noted clearly, permanently posted on the equipment, weatherproofed and conspicuous on the equipment and shall be kept legible at all times.

Modifying Equipment

Modifications or additions that may affect the capacity or safe operation of the equipment must not be made without written approval from the manufacturer or approval from a registered professional engineer. The manufacturer must approve all modifications/additions in writing. A registered professional engineer must be qualified with respect to the equipment involved and must ensure the original safety factor of the equipment is not reduced.

Prior to Lifting

- Cranes must not be used unless ground conditions are able to support the equipment and any supporting materials per the manufacturer's specifications.
- Equipment must not be assembled or used unless ground conditions are firm, drained, and graded to a sufficient extent so that the equipment manufacturer’s specifications are met.
- All loads shall be hooked or slung under the direction of a competent rigger.
- Prior to operating any equipment, the operator must be familiar with all recent entries in the equipment log book.
- The operator must carry proof of training.
- Before the start of each shift, the operator must inspect the crane or hoist and ensure the control functions and safety devices are tested.

- Safety devices are required to be on all equipment and must be in proper working order before operations begin. If any of the devices are not in proper working order the equipment must be taken out of service and operations must not resume until the device is working properly again. Examples of safety devices may include crane level indicator, boom stops, jib stops, foot pedal brake locks, horns, etc.
- A fire extinguisher must be immediately available in the cab of each crane or other hoisting equipment.
- Whenever there is a safety concern, the operator must have the authority to stop and refuse to handle loads until a qualified person has determined that safety has been assured as safe.
- When the operator of a crane or hoist does not have a clear and unobstructed view of the boom, jib, load line, load hook and load throughout the whole range of the hoisting operation, the operator must act only on the directions of a qualified, designated signaler who has a clear view of the things the operator cannot see.
- The operator of the crane or hoist must stop the operation of the equipment on receiving a stop signal from any person.
- Operators of hoisting equipment shall disregard signals from anyone except designated signal persons except in an emergency or when somebody or anybody gives a stop signal.
- Where the design of a crane is such that the boom may fall over backward, positive boom stops shall be installed in accordance with the manufacturer's instructions.
- No employee shall ride or be permitted to ride on loads, hooks or similar equipment unless specifically authorized by his or her supervisor and a specific Job Hazard Assessment has been performed.

Marking Boundaries

The operator must address safety measures to be used when the equipment has the potential to strike and injure an employee or pinch/crush an employee against any other object. The operator will identify hazard areas by marking the boundaries of the crane swing radius with warning lines, railings or similar barriers. Employees or other persons are not allowed within the barrier when operations are taking place. The crane will immediately be required to stop movement if someone enters the swing radius area.

Overhead Power Lines

A pre-operation hazard assessment will be performed to identify the work zone and determine if any part of the equipment could reach closer than 20 feet to a power line. The work zone shall be identified by demarcating boundaries such as flag and range limiting devices or defining the work zone as 360 degrees around the equipment up to the maximum working radius.

The operator will ensure measures have been taken if determined that no part of the equipment, load line or load could get closer than 20 feet to a power line. If it is determined that any part of the equipment, load line or load could get closer than 20 feet to a power line then at least one of the following measures must be taken:

- Ensure the power lines have been deenergized, visibly grounded, and induction from nearby live lines is not a potential.
- Determine the line's voltage and minimum approach distance permitted in Table A below.

TABLE A—MINIMUM CLEARANCE DISTANCES

Voltage (nominal, kV, alternating current)	**Minimum Clearance Distance** (feet)
up to 50	10
over 50 to 200	15
over 200 to 350	20
over 350 to 500	25
over 500 to 750	35
over 750 to 1,000	45
over 1,000	(as established by the utility owner/operator or registered professional engineer who is a qualified person with respect to electrical power transmission and distribution).

Note: The value that follows "to" is up to and includes that value. For example, over 50 to 200 means up to and including 200kV.

Assembling/Disassembling Equipment

The manufacturer procedures, instructions, and prohibitions must be followed when assembling and/or disassembling equipment.

A competent and qualified person must direct the assembly/disassembly of equipment.

Handling the Load

Size of Load

The rated capacity of a crane or hoist must not be exceeded, except for rated load test. The working load shall not be exceeded and shall be determined by the original manufacturer of the equipment, a registered professional engineer, or other persons whose qualifications are acceptable to local regulatory requirements.

Attaching the Load

- The load shall be attached to the hook by means of slings or other suitable and effective means which shall be properly rigged to ensure the safe handling of the load.
- Chain and rope slings shall be free of kinks or twists before use.
- Baskets, tubs, skips or similar containers used for hoisting bulk materials shall be loaded so as not to exceed their safe carrying capacity.
- The hoist rope shall not be wrapped around the load.
- The load shall not be moved without checking the balance and the brakes.
- Brakes shall be checked in compliance with manufacturers written procedures.

Safe Lifting

- If the operator of a lifting device has any doubts as to the safety of employees in the vicinity of the lift, the operator must not move any equipment or load until the operator is assured that the working conditions are safe. He or she shall report the circumstances to his or her supervisor who then shall be responsible for determining the action to be taken.
- Loads will be carried as close to the grade as possible and tag lines shall be rigged as necessary to control swinging of the load.

- Prior to moving a load the operator and signaler shall ensure that the travel path of the load is free and clear of any undesirable obstructions.
- A suspended load shall not be left unattended by the operator.
- Ensure all employees who may be affected by the lift are aware of the hazards and are adequately protected.
- The operator must ensure that lifting and hoisting work is arranged so that a load does not pass over workers.
- The operator of a lifting device that is travelling with a load must ensure that the load is positioned as close to the ground or grade as possible.
- No worker shall for any reason stand or pass beneath a suspended load.
- Release the load only after the stability of the load has been verified and loads shall be safely landed and supported before unhooking.

If a hoist or crane is designed to be operated with outriggers or other stabilizing devices, the operator shall ensure:

- The outriggers or other stabilizing devices are used in accordance with the manufactures instructions.
- Are set on a solid footing or pad.
- Have their controls readily accessible to the operator and in a suitable position for safe operation.
- The area around the outriggers or other stabilizing devices is kept free of obstruction.
- There is a proper minimum clearance between any moving part of the crane and any obstacle near the base of the hoist or crane.
- Where there is a danger of an employee being trapped or crushed by any moving part of the crane when the crane swings, the area around the base of the crane is barricaded to restrict the entry of employees.

Log Book Procedure

- The log book will be readily available at all times to the site supervisor, safety steward, managers, customer, regulatory officials, or any other Company employee concerned with the maintenance and safe operation of the equipment. The operator shall be responsible for recording defects, operating difficulties, the need for maintenance and all maintenance and alteration work performed.
- The log book for the equipment at a project shall include the greater of the immediately preceding twelve months or the period the crane or similar hoisting device is on the project.
- All log book entries shall, on a regular basis, be signed by the person who performs the inspection, maintenance or calibration and review.
- The log book will include the following information:
    - The date and time any work was performed on the hoist.
    - Length of time in lifting service including hours of service.
    - All defects and deficiencies and when they were detected.
    - Details on all inspections, examinations, calibrations, checks and tests.
    - Repairs or modifications performed or maintenance history.
    - The record of certification.
    - Details on any incident that may affect the safe operation of the equipment.

Inspections

Each crane and hoist must be inspected and maintained at a frequency and to the extent required to ensure that every component is capable of carrying out its original design function with an adequate margin of safety and is

maintained in good working order. Inspections shall also be conducted at regular intervals as recommended by the manufacturer and by law.

Records of inspection and maintenance must be kept by the equipment operator and other persons inspecting and maintaining the equipment, for the following types of lifting equipment:

- A crane or hoist with a rated capacity of 900kg (2200 lbs.) or more
- A crane or hoist used to support an employee
- A tower crane
- A mobile crane, boom truck or sign truck
- A side boom tractor or pipe layer
- A construction material hoist
- A chimney hoist

The following inspections shall occur at the indicated frequency:

New Equipment

Before being placed in service, new hoisting equipment, or hoisting equipment which has had modifications in the design or has undergone major repairs, shall be inspected and proof tested under the direction of a competent person who shall give the written warranty of the safe capacity of the equipment.

Daily

A visual inspection of the equipment will be conducted by a competent person prior to each shift that the equipment is used. The inspection must consist of observation for apparent deficiencies. Some inspection items shall include control mechanisms, pressurized lines, hooks and latches, wire rope, electrical apparatus, tires and tracks, and ground conditions. The manufacturer's guidelines shall be followed in the inspection process.

The following will be tested at the beginning of each shift by the competent operator:

- Limit switches
- Brakes
- Circuit breakers
- Other safety devices

Any defects found during inspection or during the use of a crane or hoist must be recorded in the inspection and maintenance record system and be reported immediately to the supervisor, who must determine the course of action to be taken. If a defect affects the safe operation of the crane or hoist, the equipment must not be used until the defect has been remedied.

Monthly

The crane manager will ensure monthly inspections of equipment by a competent person are documented. The manufacturer's guidelines shall be followed. The inspection must be documented. Documentation must include the following:

- items checked,
- results of inspection,
- name and signature of the inspector.

Documentation must be retained for 12 months. (Documented monthly inspection is not required if the daily inspection is documented and records are retained for 12 months).

Any defects must be corrected before the crane is used. The report must be dated and signed by the person performing the inspection.

Yearly

Once each year a more detailed inspection must be made of all hoisting equipment at each facility. After completing the annual inspection, a report must be completed and signed by the person performing the inspection and the report will be returned promptly to the Safety Director.

Rigging

All rigging work shall be assembled, used, maintained, and dismantled under the direct supervision of a competent and qualified rigger trained in safe rigging practices, in accordance with manufacturer's specifications and with the code of signals authorized by local regulatory guidelines for controlling hoisting operations.

Rigging Breaking Strength and Load Rating

The safe working-load on ropes, chains, slings, and fittings shall not exceed the safe working-load recommended by the manufacturer.

Rigging fittings must be marked with the manufacturer's identification, product identifier, and the working load limit (WLL) or sufficient information to readily determine the WLL.

Rigging shall not be subjected to a load of more than 10 percent of the breaking strength of the weakest part of the rigging, if an employee is being raised or lowered 20 percent of the ultimate breaking strength of the weakest part of the rigging, and if the rigging is fatigue rated and an employee is not being raised or lowered the maximum load must not exceed 25 percent of the ultimate breaking strength.

The operator may use a dedicated rigging assembly designed and certified for a particular lift or project by a professional engineer but the dedicated rigging assembly must be re-rated before it is used for another lift or project.

The maximum load rating of the rigging, as determined by the rigging manufacturer or a professional engineer must be legibly and conspicuously marked on the rigging.

Rigging Inspection and Rejection Criteria

All rigging and equipment to be used during a work shift is to be inspected thoroughly prior to each period of continuous use during the shift to ensure the rigging is functional and safe by a competent person. All deteriorated or defective equipment shall be immediately removed from service if it doesn't meet the below inspection requirements or rejection criteria.

Slings

- A wire rope sling with a swaged or poured socket or a pressed fitting must be permanently identified with its working load limit, the angle upon which the WLL is based and the name or mark of the sling manufacturer.

- An alloy steel chain sling must be permanently identified with the size, the manufacturer's grade and the WLL, the length and number of legs, and the name or mark of the sling manufacturer.
- Synthetic fiber web slings must be permanently identified with the manufacturer's name or mark, manufacturer's code or stock number, working load limits for the types of hitches permitted, and type of synthetic web material or be removed from service if any of these requirements are not met.
- A sling shall be permanently removed from service if it is damaged or worn.
- All slings are to be clearly labeled to indicate the slings maximum load or the slings maximum load is made readily available to employees.
- A sling must be stored to prevent damage when not in use.
- When a sling is applied to a sharp edge of a load, the edge or the sling must be protected to prevent damage to the sling.

Hooks

- A worn or damaged hook must be permanently removed from service and the operator shall not use a hook that is worn, damaged, deformed, cracked or otherwise defective or where the throat opening has been increased or the tip has been bent more than 10% out of plane from the hook body, or any dimension of the hook has been decreased by 10% or any damage exceeds any criteria specified by the manufacturer.
- All hooks shall be clearly labeled with the maximum load of the hook in a location where an rigger using the hook can easily see the rating or the hook's maximum load is made readily available to the rigger.
- All hooks shall have a safety latch, mousing or shackle if the hook could cause injury if it is dislodged while in use.

All devices shall be visually inspected prior to use and removed from service for any of the following conditions:

- Nylon slings with:
  - Abnormal wear.
  - Torn stitching.
  - Broken or cut fibers.
  - Discoloration or deterioration.

- Wire rope slings with:
  - Kinking, crushing, bird caging, or other distortions.
  - Evidence of heat damage.
  - Cracks, deformation, or worn end attachments.
  - Hooks opened more than 10% at the throat.
  - Hooks twisted sideways more than 10 degrees from the plane of the unbent hook.

- Alloy steel chain slings with:
  - Cracked, bent, or elongated links or components.
  - Cracked hooks.
  - Shackles, eye bolts, turnbuckles, or other components that are damaged or deformed.

Operational Procedures

- Rigging shall not be subjected to loads more than outlined in legislative requirements. The operator will ensure the maximum load rating of the rigging is available to the employees at the work site.

- Wire rope, alloy steel chain, synthetic fiber rope, metal mesh slings, and synthetic fiber slings shall meet the requirements of ASME Standard B30.9-2006, Safety Standard for Cableways, Cranes, Derricks, Hoists, Hooks, Jacks and Slings (or current version). Below-the-hook lifting devices, other than slings, shall meet the requirements of ASME Standard B30.20-2006, Below the Hook Lifting Devices (or current version).
- Loads to be unhooked by a rigger must be safely landed and supported before the rigging is detached.
- The determination of the working load limit (WLL) of a sling assembly must ensure that the WLL of any individual component of the assembly is not exceeded.
- All slings used to hoist a load and the slings fittings and attachments must be in compliance with legislated standards and capable of supporting at least 10 times the load to which the slings fittings, and attachments may be subjected where they are used to support an employee, and at least five times the maximum load to which they may be subjected in any other case.
- No shackles shall be subjected to a load greater than the maximum load indicated on the shackle, and all shackle pins are installed to prevent accidental withdrawal, and a bolt is never used in the place of a properly fitted shackle pin.
- All hooks shall have a safety latch, mousing, or shackle if the hook could cause injury if it is dislodged while in use.
- Where an employee or surrounding property may be endangered by the rotation or motion of a load during hoisting one or more tag lines must be used to control the rotation or motion of the load and the tag lines will be of sufficient length to protect the employees and surrounding property from any overhead hazard and the tag lines are not removed from the load until the load is securely landed.

Rigging a Load

- Determine the weight of the load - do not guess.
- Determine the proper size for slings and components.
- Do not use manila rope for rigging.
- Ensure that shackle pins and shouldered eyebolts are installed in accordance with the manufacturer's recommendations.
- Ensure that ordinary (shoulderless) eyebolts are threaded to at least 1.5 times the bolt diameter.
- Use safety hoist rings (swivel eyes) as a preferred substitute for eye bolts wherever possible.
- Pad sharp edges to protect slings.
- Remember that machinery foundations or angle-iron edges may not feel sharp to the touch but could cut into rigging when under several tons of load.
- Wood, tire rubber, or other pliable materials may be suitable for padding.
- Do not use slings, eyebolts, shackles, or hooks that have been cut, welded, or brazed.
- Install wire-rope clips with the base only on the live end and the U-bolt only on the dead end.
- Follow the manufacturer's recommendations for the spacing for each specific wire size.
- Determine the center of gravity and balance the load before moving it.
- Initially lift the load only a few inches to test the rigging and balance.

Signaling

A signal person must be provided for any and all overhead lifting and crane work.

Signals to the operator shall be in accordance with industry standards unless a different signal requirement has been established for the specific project or lift. Specific requirements include:

- Each movement of equipment shall be proceeded by distinctive signals clearly discernible to all employees endangered by the movement and clearly distinguishable by the operator of the equipment controlled, and a signal which is not understood clearly by the operator of equipment shall be acted upon by the operator as though it were a stop signal.
- A signal person shall not cause a signal to be given for the movement of equipment unless he or she has ensured that he or she and all employees within the area for which he or she is responsible are not endangered by the movement.
- Only a designated signaler shall cause a signal to be given for the movement of equipment, but employees may cause a stop signal to be given and this signal shall be obeyed promptly and without question.
- An employee designated to direct the movement of equipment shall not be otherwise occupied while the equipment is in motion and he or she shall be prepared to signal to stop during the motion.
- A signaling device that functions unreliably or in a way that might constitute a hazard to an employee shall be removed from service immediately.
- Signals shall be discernible or audible at all times.
- Some special operations may require addition to or modification of the basic signals.
- For all such cases, these special signals shall be agreed upon and thoroughly understood by both the person giving the signals and the operator, and shall not be in conflict with the standard signals.

Training:

Training shall include:

- Documentation of employee, date of training and subject matter, including method used to test knowledge of material.
- No employee shall operate cranes or equipment covered by this program until training has been complete and management has approved and designated that person as a qualified operator. The Safety Director must be included in the decision to make an employee an authorized operator.

Lift Equipment Inspections:

The Lift Equipment Inspection Form is located at the safety support center in the form tab: Lift Equipment Form

DISCIPLINARY PROGRAM

Integrated Water Services, Inc.
(the Company)

Purpose

The purpose of this program is to establish a firm but fair disciplinary action policy to enforce the requirements of the safety program.

Scope

This procedure is applicable to all IWS Company employees, subcontractor employees and their affected parties.

Responsibilities

It is the responsibility of each employee to work in a safe and efficient manner according to the procedures established and published at www.iws.support. If any employee violates provisions of the Integrated Water Services safety program or works in a manner that threatens the safety or welfare of themselves or another person, that employee will be subject to disciplinary action up to and including termination of employment.

Integrated Water Services management holds each employee personally responsible for following and enforcing the company safety program.

Requirements

Safety is a core value and a condition of employment at Integrated Water Services. The following actions constitute a safety violation:

- Not following Company safety procedures or those of our clients.
- Horse play.
- Failure to wear required PPE, and or abuse of PPE.
- Being under the influence of drugs or alcohol at work.
- Bringing weapons on the job site of clients who forbid the same.
- Failure to report incidents or injuries.
- Attempted or actual physical force to cause injury, threatening statements, or other actions to cause an employee to feel they are at risk of injury or physical violence.

Procedure

The following is a list of escalating actions that will be enforced for violating this policy:

- The first offense will result in a verbal warning that will be documented by the supervisor in the form of an email. The employee will be informed via verbal discussion and email that he or she is being issued a verbal warning resulting from a specific infraction, rule, or procedure that was violated and corrective actions that must be taken. The required corrective actions the employee must take to rectify the infraction will be communicated to the employee. Corrective actions may include training, apologies, change of behavior, donning of PPE, etc.
- The second offense will result in a written Safety Violation and additional training. The Safety Violation will be issued by the site manager or the safety manager with a cc going to the HR department. This Safety Violation will describe the unsafe activity or behavior that needs correction, the date by which the correction must occur, and necessary steps the violating employee must take to remedy the situation. The employee receiving the Safety Violation has the right to submit a written rebuttal to the Safety Violation by

replying to the email. The employee must sign the Safety Violation to acknowledge their receipt of the Safety Violation. The Safety Violation and any rebuttal will become a part of the IWS employee's permanent employment records.

- The third offense will result in another written Safety Violation followed by termination of employment for IWS employees, and removal of subcontractor subject employee from the IWS worksite. Again, the employee may submit a written rebuttal to the Safety Violation. It is encouraged but not required that the subject employee sign the third and final Safety Violation. The Safety Violation and any rebuttal will become a part of the IWS employee's employment records. Refusal to sign a Safety Violation is grounds for immediate termination or removal from the site.

In the case of serious safety violations such as by-passing guarding, entering a confined space without any safeguarding, malicious or intentional damage to equipment, fighting, or other egregious acts, that put the violator, other employees, or the Company at serious risk of injury or damage, the manager may move the violator directly to the second or third warning level without prior notification. If the violator's actions put him/her or others at risk of immediate danger to life or health, the manager has the option to terminate the employee with no further warning.

Safety Violation Form

This form can be found at www.support under the 'Forms' tab.

DRIVING

Integrated Water Services, Inc.
(the Company)

Purpose

This program outlines the procedures for safe operation of all vehicles on the property, including driving regulations, vehicle maintenance and inspection requirements, accident prevention policies and procedures, driver training programs, and much more.

Scope

This policy applies to all company and personal vehicles used in service to or on behalf of Integrated Water Services (IWS).

When work is performed by a subcontractor on a company site, the contractor's written safety program shall take precedence for their employees. However, subcontractors may adopt this procedure for their use.

Key Responsibilities

Safety Director

- The Safety Director is responsible for developing and maintaining the program and related procedures. These procedures are available at the company Support center located at www.iws.support.

Site Manager

- Responsible for the implementation and maintenance of the program for their site and ensuring all assets are made available for compliance with the plan.

Employees

- Employees shall be familiar with this procedure and the local vehicle safety standards.
- Follow all requirements, report unsafe conditions, and follow all posted requirements.
- Only authorized employees will drive a motor vehicle in the course and scope of work or operate a company owned vehicle.
- The driver of an Integrated Water Services vehicle will have a valid and current license to operate the vehicle. Drivers will be appropriately licensed and trained to operate the vehicle they have been authorized to operate.
- Authorized drivers are not allowed to operate a motor vehicle while under the influence of alcohol, illegal drugs, certain medications, prescription or over-the counter medications that might impair their driving skills.

Vehicle Safety Policy Statement

Integrated Water Services, Inc. (IWS) is committed to protecting employees, contractors, customers, and the public through the safe operation of all vehicles used in support of company operations. Safe driving is a condition of employment for any employee operating a company vehicle or operating a vehicle on behalf of the Company.

IWS recognizes that vehicle incidents present significant risk to personnel, the public, equipment, and business operations. To reduce these risks, the Company is committed to maintaining a fleet safety program focused on prevention, accountability, regulatory compliance, and continuous improvement. This includes driver qualification,

vehicle inspection and maintenance, journey management, incident reporting, defensive driving practices, and compliance with all applicable federal, state, local, and client requirements.

All employees are expected to operate vehicles responsibly and professionally at all times. Drivers shall wear seat belts, obey traffic laws, avoid distracted or impaired driving, maintain safe following distances, and immediately report vehicle incidents, unsafe conditions, or restrictions to driving privileges. The Company prohibits the operation of vehicles while under the influence of alcohol, illegal drugs, or medications that may impair safe driving ability.

IWS is committed to ensuring vehicles are maintained in safe operating condition and properly equipped for the intended work and travel conditions. Employees are expected to conduct pre-use inspections and identify hazards related to weather, road conditions, load securement, visibility, and vehicle readiness prior to travel.

Leadership at all levels is responsible for supporting and enforcing this policy, providing appropriate resources, and promoting a culture where safety takes priority over production, schedules, or convenience. Every employee has the authority and responsibility to stop work or refuse vehicle operation when conditions are unsafe.

Through shared accountability and disciplined safe driving behaviors, IWS strives to prevent vehicle incidents, protect lives, preserve assets, and maintain the trust of our employees, customers, and communities.

Vehicles and Transportation Related

Driving Safety

- Backing should be avoided whenever practicable. Where backing is required, drivers, when parking, should make every effort to park the vehicle in a manner that allows the first move when leaving the parking space to be a forward motion.
- Passenger compartments are to be free from loose objects that might endanger passengers in the event of an accident. Any vehicle with non-segregated storage shall be equipped with a cargo net or equivalent to separate the storage area.
- Signs, stickers, or labels are to be fitted in such a manner that they do not obstruct the driver's vision or impede the driver's use of any controls.

<u>Reporting of Traffic Violations and Vehicle Accidents</u>

- Employees will report any accident to the safety manager while driving a company vehicle or in service to the Company.

<u>Safe Driver Behaviors/Practices</u>

- Drivers will observe safe driving practices at all times.
- Obey, State, and local traffic laws as well as applicable client requirements.
- Drivers must immediately report any restriction to driving privileges to the HR department.
- Seatbelts shall be worn by all occupants at all times whenever a vehicle is in motion.
- When speaking with a passenger, always keep your eyes on the road.
- Drivers must follow all local cell phone laws and client requirements while driving on Company business.
- Drivers shall not exceed the posted speed limit.

- Drivers shall maintain a safe distance between other vehicles.
- Slow down around construction, large vehicles, wildlife, fog, rain, snow, or any other hazard.
- Alcohol or illegal drugs are not allowed to be in a company vehicle at any time.

Journey Management

- Inspect for vehicle damage and immediately report any damage to your supervisor.
- Make sure dirt or snow is removed from lights on all sides of the vehicle.
- Brush or clean off snow or ice on all windows to ensure clear vision.
- Check fuel level to be certain the destination can be reached.
- Check to ensure the license plates and inspection tag on vehicle are current.
- Ensure that there is a first aid kit and inspected fire extinguisher in company vehicles.
- Be rested and alert while driving.
- Employees are not to perform repairs or maintenance on Company vehicles other than routine fluid additions, wiper changes and filter replacements.

Vehicle Requirements

- Vehicles shall be maintained in safe working order.
- Vehicles are to be fitted with a spare wheel and changing equipment to safely change a wheel, or a suitable alternative.
- All vehicles are to be equipped with adjustable left, right and central rear-view mirrors.
- Loads shall be secured and not exceed the manufacturer's specifications or regulatory legal limits.

Transportation

If workers are required to travel in a worker transportation vehicle, Integrated Water Services must ensure that reasonable measures are taken to evaluate road, weather and traffic conditions to ensure the safe transit of the workers.

The operator of a worker transportation vehicle must ensure that the vehicle has been inspected prior to use or before the journey. The vehicle inspection form is located at www.iws.support.

Seated workers must wear seat belts while being transported in a vehicle equipped with seat belts.

A worker must not ride in a vehicle in a standing position, unless protected from being thrown off balance.

A worker must not ride in a vehicle with any part of their body outside the vehicle unless essential to the work process and then only if the worker is adequately restrained.

Any enclosed portion or compartment of a vehicle in which workers are transported must have:

- Effective ventilation, independent of doors, providing clean air.
- Adequate lighting and means for heating and cooling.
- An effective means of communication between the operator and passengers, and
- More than one means of exit.

ATV Vehicles

If an Integrated Water Services employee is required to utilize an ATV vehicle, the following shall apply:

- Follow all manufacturer guidelines when operating an ATV.
- Integrated Water Services must ensure that each ATV operator is properly trained in the safe operation of the vehicle. The training program for an ATV operator must cover:
    - the operator's pre-trip inspection
    - use of personal protective apparel
    - operating skills according to the ATV manufacturer's instructions
    - basic mechanical requirements, and
    - loading and unloading the vehicle as applicable
- An ATV operator and any passenger on an ATV must wear clothing suitable for the environmental conditions and as necessary to protect against the hazards presented at the worksite.
- Approved head protection shall be worn by the operator and passenger.
- Loading and unloading of an ATV onto or off a carrier vehicle must be done in a safe manner. If ramps are used when loading or unloading an ATV they must be securely anchored, placed at a suitable angle, be sufficiently wide, and have a surface finish which provides an adequate grip for the ATV's tires.

DRUG FREE WORKPLACE

Integrated Water Services, Inc.
(the Company)

While it is not the Company's intent to infringe upon the private lives of its employees, management has the responsibility to provide a safe and hazard free work environment. Therefore, all employees are expected to arrive at work fit for duty, and to remain so for the remainder of the work period.

No employee may enter Company or client premises while under the influence of, or have in his or her possession, any intoxicating beverage or behavior altering drug of any kind during working time. Likewise, the use, sale, transfer or possession of alcohol, drugs or controlled substances on the job, on Company or client property, in Company vehicles, or in personal vehicles while on Company business is prohibited. (Employees using medication prescribed by a licensed physician may be required to provide management with proof that such medication is safe to take while the employee is on duty. Management will have sole discretion as to whether or not it will be safe for those employees to remain on duty.)

Employees are strictly forbidden to consume alcoholic beverages or illegal drugs during work time, break times or meal periods; neither may they return to work after such breaks or meal periods under the influence of such substances. Management reserves the right to require and conduct drug or alcohol tests whenever reasonable cause exists that an employee is under the influence of alcohol or drugs.

Employees who are convicted of a drug related crime occurring in the workplace must notify the Company within five (5) days of the conviction.

Employees who voluntarily come forward to management, prior to a situation requiring testing and who cooperate with the Company with regard to treatment, may not be subject to discipline. An employee who requests a leave of absence to enter a drug or alcohol rehabilitation program will be reasonably accommodated with an unpaid leave of absence, as required by law, to enroll in such a program if such an accommodation is not an undue hardship on the Company.

Employees voluntarily entering a drug or alcohol rehabilitation program may be required to provide medical validation of satisfactory completion of the program. Employees returning to work following satisfactory completion of a rehabilitation program may be subject to drug or alcohol tests without prior notice for up to one (1) year following the return date. A recurrence of a positive drug or alcohol test following return to work may lead to disciplinary action up to and including termination.

Failure to comply with these work rules may lead to disciplinary action up to and including termination.

ELECTRICAL SAFETY

Integrated Water Services, Inc.
(the Company)

Purpose

The purpose of this Electrical Safety program is to set forth procedures for the safe use of electrical equipment and tools at Integrated Water Services.

Scope

This program applies to all Integrated Water Services employees. Contractors providing electrical services to the Company are doing so knowing that they bring the higher level of expertise to bear. Contractors must follow their written electrical safety procedures.

When work is performed by a subcontractor on a company site, the contractor's written safety program shall take precedence for their employees. However, subcontractors may adopt this procedure for their use.

Definitions

Affected Personnel: Personnel who normally use and work with electrical equipment, tools, and appliances, but who do not make repairs or perform lock out/tag out procedures.
Appliances: Electrical devices not normally associated with commercial or industrial equipment such as air conditioners, computers, printers, copiers, coffee pots, microwave ovens, toasters, etc.
Circuit Breaker: A device designed to open and close a circuit by non-automatic means and to open the circuit automatically on a predetermined over current without injury to itself when properly applied within its rating.
Disconnecting Means: A device, or group of devices, or other means by which the conductors of a circuit can be disconnected from their source of supply.
Disconnecting Switch: A mechanical switching device used for isolating a circuit or equipment from a source of power.
Double Insulated Tool: Tools designed of non-conductive materials that do not require a grounded, three wire plug.
Ground: Connected to earth or some conducting body that serves in place of the earth.
Grounded Conductor: A conductor used to connect equipment or the grounded circuit of a wiring system to a grounding electrode or electrodes.
Ground Fault Circuit Interrupter (GFCI): A device whose function is to interrupt the electric circuit to the load when a fault current to ground exceeds some predetermined value that is less than that required to operate the over current protective device of the supply circuit.
Insulated: A conductor encased within material of composition and thickness that is recognized as electrical insulation.
Premises Wiring: That interior and exterior wiring, including power, lighting, control, and signal circuit wiring together with all its associated hardware, fittings, and wiring devices, both permanently and temporarily installed, which extends from the load end of the service drop, or load end of the service lateral conductors to the outlet (s). Such wiring does not include wiring internal to appliances, fixtures, motors, controllers, motor control centers, and similar equipment.
Qualified Person: One that has been trained in the repair, construction and operation of electrical equipment and the hazards involved.
Strain Relief: A mechanical device that prevents force from being transmitted to the connections or terminals of a cable or extension cord.
Class I Locations: Are those in which flammable gases or vapors are or may be present in the air in quantities sufficient to produce explosive or ignitable mixtures.

- Class 1 Division 1 - Is a location (a) in which hazardous concentrations of flammable gases or vapors may exist under normal operating conditions; or (b) in which hazardous concentrations of such gases or vapors may exist frequently because of repairs or maintenance operations or because of leakage; or (c) in which a breakdown or faulty operation or equipment or processes might release hazardous concentrations of flammable gases or vapors, and might also cause simultaneous failure of electrical equipment.

- Class 1 Division 2 - Is a location (a) in which volatile flammable liquids or flammable gases are handled, processed, or used, but in which the hazardous liquid, vapors, or gases will normally be confined within closed containers or closed systems from which they can escape only in case of accidental rupture or breakdown of such containers or systems, or in of abnormal operation of equipment or (b) in which hazardous concentrations of gases or vapors are normally prevented by positive mechanical ventilation, and which might become hazardous through failure or abnormal operations of the ventilating equipment; or (c) that is adjacent to a Class 1, Division 1 location, and to which hazardous concentrations of gases or vapors might occasionally be communicated unless such communication is prevented by adequate positive-pressure ventilation from a source of clean air, and effective safeguards against ventilation failure are provided.

Class II locations: Class II locations are those that are hazardous because of the presence of combustible dust. Class II locations include the following:

- Class II, Division 1 - A Class II, Division 1 location is a location (a) in which combustible dust is or may be in suspension in the air under normal operating conditions, in quantities sufficient to produce explosive or ignitable mixtures; or (b) where mechanical failure or abnormal operation of machinery or equipment might cause such explosive or ignitable mixtures to be produced, and might also provide a source of ignition through simultaneous failure of electric equipment, operation of protection devices, or from other causes, or (c) in which combustible dusts of an electrically conductive nature may be present.

  NOTE: This classification may include areas of, areas where metal dusts and powders are produced or processed, and other similar locations that contain dust producing machinery and equipment (except where the equipment is dust-tight or vented to the outside).

- These areas would have combustible dust in the air, under normal operating conditions, in quantities sufficient to produce explosive or ignitable mixtures.
- Combustible dusts that are electrically nonconductive include dusts produced in the handling and processing produce combustible dusts when processed or handled.
- Dusts containing magnesium or aluminum are particularly hazardous and the use of extreme caution is necessary to avoid ignition and explosion.

Class II, Division 2: A Class II, Division 2 location is a location in which: (a) combustible dust will not normally be in suspension in the air in quantities sufficient to produce explosive or ignitable mixtures, and dust accumulations are normally insufficient to interfere with the normal operation of electrical equipment or other apparatus; or (b) dust may be in suspension in the air as a result of infrequent malfunctioning of handling or processing equipment, and dust accumulations resulting there from may be ignitable by abnormal operation or failure of electrical equipment or other apparatus.
NOTE: This classification includes locations where dangerous concentrations of suspended dust would not be likely but where dust accumulations might form on or in the vicinity of electric equipment. These areas may contain

equipment from which appreciable quantities of dust would escape under abnormal operating conditions or be adjacent to a Class II Division 1 location, as described above, into which an explosive or ignitable concentration of dust may be put into suspension under abnormal operating conditions.

Responsibilities

Safety Director

- The HSE Director will develop electrical safety programs and procedures in accordance with OSHA requirements and/or as indicated by events and circumstances.

Superintendent

- Superintendents are responsible for ensuring that only qualified employees and qualified contractors perform electrical repairs or installations.
- Superintendents are also responsible for ensuring all applicable electrical safety programs are implemented and maintained at their locations.

Employees

- Employees are responsible to use electrical equipment, tools, and appliances according to this program, for attending required training sessions when directed to do so and to report unsafe conditions to their supervisor immediately.

Only qualified persons may work on electric circuit parts or equipment that have not been deenergized. Such persons shall be made familiar with the use of special precautionary techniques, PPE, insulating and shielding materials and insulated tools.

Safe Work Practices

Safe work practices shall be employed to prevent electric shock or other injuries resulting from either direct or indirect electrical contact when work is performed near or on equipment or circuits which are or may be energized.

Inspections

- Electrical equipment, tools, and appliances must be inspected prior to each use.
- The use of a hard fixed GFCI or a portable GFCI adapter shall be used with all portable hand tools, electric extension cords, drop lights and all 110-volt equipment.
- Faulty equipment, tools, or appliances shall be removed from service immediately and tagged “Out of Service”, dated, and signed by the employee applying the tag.

Repairs

- Only Qualified Personnel, who have been authorized by the department supervisor or manager, may make repairs to supply cords on electrical tools and to extension cords.
- The names of employees authorized to make repairs will be posted in the workplace.
- Only certified electricians shall be allowed to make repairs to electrical equipment and wiring systems.
- The supervisor obtaining the services of a certified electrician is responsible for verifying the electrician’s credentials.

- Employees shall not enter spaces containing exposed energized parts unless qualified and proper illumination exists to enable employees to work safely.
- If employees are subject to handle long dimensional conductor objects (ducts or pipes), steps for safe work practices shall be employed to ensure the safety of workers.

Extension Cords

- Use only three-wire, grounded, extension cords and cables that conform to a hard service rating of 14 amperes or higher, and grounding of the tools or equipment being supplied.
- Only commercial or industrial rated-grounded extension cords may be used in shops and outdoors.
- Cords for use other than indoor appliances must have a rating of at least 14 amps.
- Cords must have suitable strain relief provisions at both the plug the receptacle ends.
- Work lamps (drop light) used to power electrical tools must have a 3 wire, grounded outlet, unless powering insulated tools.
- Adapters that allow three wire, grounded prongs, connected to two wire non-grounded outlets are strictly prohibited.
- Cords must have a service rating for hard or extra-hard service and have S, AJ, ST, SO, SJO, SJT, STO, or SJTO printed on the cord.
- Cords may not be run through doorways, under mats or carpets, across walkways or aisles, concealed behind walls, ceilings or floors, or run through holes in walls, or anywhere where they can become a tripping hazard.
- High current equipment or appliances should be plugged directly into a wall outlet whenever possible.
    - All extension cords shall be plugged into one of the following:
    - A GFCI outlet;
    - A GFCI built into the cord;
    - A GFCI adapter used between the wall outlet and cord plug.
- All extension cords and or electrical cords shall be inspected daily or before each use, for breaks, plug condition and ground lugs, possible internal breaks, and any other damage. If damage is found, the extension cord or electrical cord shall be removed from service and repaired or replaced.

Outlets

- Outlets connected to circuits with different voltages must use a design such that the attachment plugs on the circuits are not interchangeable.

Multiple Outlet Boxes

- Multiple outlet boxes must be plugged into a wall receptacle.
- Multiple outlet boxes must not be used to provide power to microwave ovens, toasters, space heaters, hot plates, coffeepots, or other high-current loads.

Double Insulated Tools

- Double insulated tools must have the factory label intact indicating the tool has been approved to be used without a three-wire grounded supply cord connection.
- Double insulated tools must not be altered in any way, which would negate the factory rating.

Switches, Circuit Breakers, and Disconnects

- All electrical equipment and tools must have an on and off switch and may not be turned on or off by plugging or unplugging the supply cord at the power outlet.
- Circuit breaker panel boxes and disconnects must be labeled with the voltage rating.
- Each breaker within a breaker panel must be labeled for the service it provides.
- Disconnect switches providing power for individual equipment must be labeled accordingly.

Portable Ladders

- Only approved, non-conductive ladders may be used when working near or with electrical equipment, which includes changing light bulbs.
- Ladders must be either constructed of wood or fiberglass.
- Portable ladders shall have non-conductive side rails.
- Wood ladders should not be painted, which can hide defects, except with clear lacquer.
- When using ladders, they shall be free from any moisture, oils, and greases.

Overhead Lines

- When working near overhead lines, a clearance distance of 10' must be maintained or the lines will be de-energized and grounded. The lines shall be deenergized and grounded or other protective measures shall be provided before work is started.
- When working near overhead lines, unqualified persons must maintain a clearance distance of 10 feet. When an unqualified person is working in an elevated position near overhead lines, the location shall be such that the person and the longest conductive object he or she may contact cannot come closer to any unguarded, energized overhead line than the following distances:
    - For voltages to ground 50kV or below - 10 feet (305 cm);
    - For voltages to ground over 50kV - 10 feet (305 cm) plus 4 inches (10 cm) for every 10kV over 50kV.
- Vehicles and/or mechanical equipment must maintain a clearance distance of 10 feet (or greater) from energized overhead lines. Any vehicle or mechanical equipment capable of having parts of its structure elevated near energized overhead lines shall be operated so that a clearance of 10 ft. (305 cm) is maintained. If the voltage is higher than 50kV, the clearance shall be increased 4 in. (10 cm) for every 10kV over that voltage.
- When possible, power lines shall be de-energized and grounded or other protective measures shall be provided before work is started.
- Minimum approach distance to energized high power voltages lines for unqualified employees is 10 feet.
- Minimum approach distance for qualified employees shall be followed as per 29 CFR 1910.333(c)(3)(i) Qualified – Table S5 Selection and Use of Work Practices - Approach Distances for Qualified Employees – Alternating Current). Approach distances are 10’ for 50kV plus 4” for every additional 10kV.

Confined or Enclosed Workspaces

- When an employee works in a confined or enclosed space that contains exposed energized parts, the employee shall isolate the energy source and turn off the source and lock and tag out the energy source (Only qualified electricians can work on an exposed energy source).
- Insulating shields/barriers are used where necessary. Protective shields, protective barriers or insulating materials as necessary shall be provided.

Enclosures, Breaker Panels, Illumination and Distribution Rooms

- A clear working space must be maintained in the front, back and on each side of all electrical enclosures and around electrical equipment for a safe operation and to permit access for maintenance and alteration.
- Proper illumination before employees are permitted to enter work areas containing exposed energized parts. Employees may not enter spaces containing exposed energized parts unless illumination is provided that enables the employees to work safely.
- Housekeeping in distribution rooms must receive high priority to provide a safe working and walking area in front of panels and to keep combustible materials to the minimum required to perform maintenance operations.
- All enclosures and distribution rooms must have "Danger: High Voltage – Authorized Personnel Only" posted on the front panel and on entrance doors.
- Flammable materials are strictly prohibited inside distribution rooms (Boxes, rags, cleaning fluids, etc.)

Lock Out/Tag Out

- Lockout/Tagout is used before performing electrical work while any employee is exposed to contact with parts of fixed electric equipment or circuits which have been deenergized, the circuits energizing the parts shall be locked out or tagged or both.
- No work shall be performed on or near exposed energized parts. This applies to work performed on exposed live parts (involving either direct contact or by means of tools or materials) or near enough to them for employees to be exposed to any hazard they present.
- If any employee is exposed to contact with parts of fixed electric equipment or circuits which have been deenergized, the circuits energizing the parts shall be locked out or tagged or both.
- Conductors and parts of electrical equipment that have been deenergized but have not been locked or tagged out shall be treated as live parts.
- Only authorized personnel may perform lock out/tag out work on electrical equipment.
- Authorized personnel will be trained in lock out/tag out procedures.
- Affected personnel will be notified when lock out/tag out activities are being performed in their work area.

Energized Electrical Work

Under NFPA 70E, there are only two instances in which an employee can work on live parts. In these situations, an Energized Electrical Work Permit shall be completed and approved by the superintendent, the Superintendent, Project Manager Regional Vice President, and the VP HSE as required by the permit.

1. When de-energizing would interrupt essential life support, emergency alarms or ventilation systems.
2. When the organization can demonstrate that de-energizing the system would introduce additional or increased hazards or that it is infeasible due to equipment design or operational limitations.

When working on energized electrical systems, NFPA 70E requires the following:

1. **Risk Assessment:** Before beginning work, conduct a thorough risk assessment to identify potential hazards associated with the task and the electrical system.

2. **Hierarchy of Controls:** Follow the hierarchy of controls, which prioritizes hazard elimination, substitution, engineering controls, administrative controls, and personal protective equipment (PPE), in that order.

3. **Permitting Process:** An Energized Electrical Work Permit (EEWP) shall be completed prior to working on energized electrical systems, including obtaining proper authorization and documentation as required by the permit. The required EEW Permit is located at the safety support center located at www.iws.support in the Permits tab.

4. **Qualified Personnel:** Only qualified electrical workers who have received appropriate training and are familiar with the hazards associated with energized electrical work should perform the tasks.

5. **Proper Tools and Equipment:** Ensure that tools and equipment used for working on energized electrical systems are insulated, properly rated, and suitable for the task.

6. **Lockout/Tagout (LOTO):** Implement LOTO procedures whenever possible to de-energize electrical systems before performing work. Work on energized systems should be the exception rather than the norm.

7. **Arc Flash and Shock Protection:** Use appropriate arc flash and shock protection measures, including wearing flame-resistant clothing, arc flash personal protective equipment (PPE), insulated tools, and voltage-rated gloves and sleeves.

8. **Work Practices:** Follow safe work practices, such as maintaining a safe distance from energized parts, using barriers and shields to prevent accidental contact, and minimizing the risk of arc flash and arc blast hazards.

9. **Continuous Monitoring:** Continuously monitor the work environment for changes that could increase the risk of electrical hazards and adjust work practices accordingly.

10. **Training and Education:** Ensure that all personnel involved in working on energized electrical systems receive comprehensive training on electrical safety procedures, hazard recognition, and emergency response.

Adhering to these rules helps mitigate the risks associated with working on energized electrical systems and promotes a safe working environment for electricians and other personnel involved in electrical maintenance and operations.

Contractors

- Only approved, certified, electrical contractors may perform construction and service work on Integrated Water Services or client property.
- It is the Manager/Supervisors responsibility to verify the contractor's certification.

Fire Extinguishers

- Approved fire extinguishers must be provided near electrical distribution centers.
- Water type extinguishers shall not be located closer than 50 feet from electrical equipment.

Electric Shock-CPR

- If someone is discovered that has received an electric shock and is unconscious, first check to see if their body is in contact with an electrical circuit. Do not touch a person until you are sure there is no contact with an electrical circuit.

- When it is safe to contact the victim, begin CPR if the person's heart has stopped or they are not breathing.
- Call for help immediately.

Electric Welders

- A disconnecting means shall be provided in the supply circuit for each motor-generator arc welder, and for each AC transformer and DC rectifier arc welder which is not equipped with a disconnect mounted as an integral part of the welder.
- A switch or circuit breaker shall be provided by which each resistance welder and its control equipment can be isolated from the supply circuit. The ampere rating of this disconnecting means may not be less than the supply conductor ampacity.

Equipment Grounding

- All gas compressors, air compressors, separators, vessels, etc. shall be grounded by means of using a lug and ground strap, nominal in size to a ½" bolt or larger, attached to a ground rod six feet or longer.
- Equipment bonding jumpers shall be of copper or another corrosion-resistance material.
- The transfer of hazardous or flammable material from a metal or plastic container with a flash point of 100 degrees F or less shall have a ground strap from the container and attached to the skid or a ground rod placed in the ground.

Assured Grounding

Where applicable, workers shall use ground fault circuit interrupters (GFCI) to protect personnel from electrical shock while working. In the absence of GFCI's for ground-fault protection, The Assured Grounding Program must be followed.

Assured Grounding Program

Instead of using GFCIs, a project can develop and implement an assured grounding program for equipment used on a project. The objective is to prevent electrocution by ensuring grounding wire is electrically continuous from the power tool to the power source.

The assured grounding program consists of a written program, daily visual inspections and a method to detect a faulty grounding wire in an extension cord or hand tool. A sample program is included at the end of this chapter. In addition to hand tools and extension cords, receptacles also must be tested.

The written program should describe the procedures for equipment testing and must be implemented by a competent person. Testing should be conducted on each piece of equipment every three months, as well as before first use or return to service after repair. In order to ensure a grounding wire is electrically continuous throughout the extension cord or power tool, a continuity test must be conducted. There are several different types of continuity testers on the market, but they pretty much work in the same manner. On one end of the tester, there is typically an alligator clip that attaches to the grounding pin of a tool that is not double insulated or the extension cord. The other end of the tester has a metal probe that plugs into the extension cord or is touched to a metal part of the power tool. If the light on the tester illuminates, the ground is continuous, thus passing the continuity test. If the light does not illuminate, the power tool or extension cord must be removed from service until it is repaired. Circuit testers are simple plug-in devices that light up different bulb sequences to indicate if a circuit is wired properly. This is critical because it allows a user to test if the hot wire is connected to the hot terminal of an outlet; the neutral wire is connected to the neutral terminal; and the ground is continuous.

Assured Grounding test results must be recorded on the Assured Grounding Test Log form located at the Forms tab of the safety support center. The log keeps track of the date each piece of equipment is tested and its service and maintenance history. The tape indicates the status of the equipment—for example, whether a piece of equipment or an extension cord needs repair or has passed its most recent test.

Equipment is tested every three months, and when a piece passes its test, it should be tagged with: white for winter, green for spring, red for summer and orange for fall. Brown tape should be used to identify any equipment that needs repair, and it then can be replaced once the piece has been fixed and passed its test.

White: December, January, February
Green: March, April, May
Red: June, July, August
Orange: September, October, November

An assured equipment grounding program requires compliance with a strict inspection and administrative process to document the condition of power tools and extension cords. It can be easy to miss a step and increase your chance for an injury or an OSHA citation. The better practice is always to use portable GFCIs to protect all tools present on the job site.

Ground Fault Circuit Interrupters
All 120-volt, single-phase 15 and 20 ampere receptacle outlets on construction or maintenance sites, which are not part of the permanent wiring of the building or structure, and which are in use by employees, shall have approved ground fault circuit interrupters for personnel protection.

- All hand portable electric tools and extension cords shall use a GFCI.
- Additionally, approved GFCI's shall be used for 240-Volt circuits in the same service as described above.
- GFCI's must be used on all 120 volt, single-phase 15 amp and 20 amp receptacles within 6 feet of a sink, damp areas or on installed outdoor equipment.
- The GFCI must be the first device plugged into a permanent receptacle.
- The GFCI must be tested before each use.

Training

All employees are provided Electrical Awareness training.

Employees who face the risk of electric shock but who are not qualified persons shall be trained and familiar with electrically related safety practices. All employees shall be trained in safety related work practices and clearance distances that pertain to their respective job assignments.

Qualified employees must adhere to the approach distances in Table S5 of CFR 1910.333 (below).

Voltage Range (phase to phase) Minimum Approach Distance
Over 300V, not over 750V.....1 ft. 0 in. (30.5 cm).
Over 750V, not over 2kV.....1 ft. 6 in. (46 cm).
Over 2kV, not over 15kV.....2 ft. 0 in. (61 cm).
Over 15kV, not over 37kV.....3 ft. 0 in. (91 cm).

Over 37kV, not over 87.5kV.....3 ft. 6 in. (107 cm).
Over 87.5kV, not over 121kV.....4 ft. 0 in. (122 cm).
Over 121kV, not over 140kV.....4 ft. 6 in. (137 cm).

Personal Protective Equipment & Safeguards for Personnel Protection

- Conductive apparel shall not be worn unless it is rendered non-conductive by covering, wrapping or other insulating means. Conductive items of jewelry or clothing shall not be worn unless they are rendered non-conductive by covering, wrapping or other insulating means.
- Employees working in areas where there are potential electrical hazards shall be provided with, and shall use, electrical protective equipment that is appropriate for the specific parts of the body to be protected and for the work to be performed.
- Equipment shall be maintained in a safe, reliable condition. Such protective equipment shall be periodically inspected and/or tested.
- If the insulating capability of protective equipment may be subject to damage during use, the insulating material shall be protected. (An example might be an outer covering of leather used for the protection of rubber insulating material.)
- Employees shall wear nonconductive head protection wherever there is a danger of head injury from electric shock or burns due to contact with exposed energized parts.
- Employees shall wear protective equipment for the eyes or face wherever there is danger of injury to the eyes or face from electric arcs or flashes or from flying objects resulting from electrical explosion.
- Each employee shall use insulated tools or handling equipment if they might make contact with conductors or parts. The program shall state that if the insulating capability of insulated tools or handling equipment is subject to damage, the insulating material shall be protected.
- Ropes and handlines used near exposed energized parts shall be nonconductive.
- Protective shields, protective barriers, or insulating materials shall be used to protect each employee from shock, burns, or other electrically related injuries while that employee is working near exposed energized parts. When normally enclosed live parts are exposed for maintenance or repair, they shall be guarded to protect unqualified persons from contact with the live parts.
- Alerting techniques used to warn and protect employees from hazards which could cause injury due to electric shock, burns or failure of electric equipment parts can take the form of safety signs and tags, barricades & attendants.

EMERGENCY ACTION PLANNING PROCEDURE

Integrated Water Services, Inc.
(the Company)

Purpose

The purpose of this Emergency Action Plan Procedure is to ensure that employees, contractors, and visitors are able to adequately plan for and respond to emergency events.

Scope

This Plan covers the designated actions the Company and employees must take to ensure employee safety from fire and other emergencies. The Company fillable Emergency Action Plan form is located at: www.iws.support/Emergencies/EAP

Evacuation

When the site emergency alarm sounds, employees, contractors, and visitors shall evacuate the site to the designated muster point.

- Employees, contractors, and visitors shall not leave the muster point until they have been accounted for and the site supervisor has authorized them to leave.

Primary Muster Point:
In case of an emergency on a work site, all workers must exit away from the emergency and toward the primary muster point.

Secondary Muster Point:
In the event that the primary muster point is compromised, workers shall evacuate to a pre-planned secondary muster point.

For sites that require visual instruction regarding exit routes and emergency muster points, a site emergency evacuation plan drawing pad is available at the EAP fillable form located at: www.iws.support/Emergencies/EAP

Procedures

Rescue & Medical Duties

Employees and workers who remain in the emergency area to operate critical site functions and/or manage the emergency shall follow these procedures:

1. Have a written safety plan, that
2. Identifies the tasks associated with response personnel duties, and
3. Identifies the hazards associated with the tasks, and
4. Identifies required Personal Protective Equipment (PPE), and
5. Identifies established means of communication that shall be used by emergency workers, and
6. Communicates the emergency rescue plan(s) in case emergency workers need to be rescued, and
7. Communicates the obligation every worker has to stop and exit the immediate emergency area when something does not go as planned, and reassess and replan before reentering the emergency area.

Alarm System

Site management shall implement an employee alarm system or tool that provides adequate warning for

necessary emergency action for reaction time for safe escape of employees from the workplace or the immediate work area, or both.

The employee alarm shall be capable of being perceived above ambient noise or light levels by all employees in the affected portions of the workplace. Tactile devices may be used to alert those employees who would not otherwise be able to recognize the audible or visual alarm.

The employee alarm shall be distinctive and recognizable as a signal to evacuate the work area.

Designated Alarm

The designated emergency evacuation alarm for outdoor construction sites will be noted on the fillable Emergency Action Plan located at: www.iws.support/Emergencies/EAP. Upon hearing or visually observing the alarm, all employees shall leave the location in a direction away from the emergency and cross wind away from any potential hazardous atmosphere and gather at the entrance of the primary or secondary muster point. All EAP's shall note a primary and secondary muster point(s).

The site supervisor shall assure that all employee alarm systems are restored to normal operating condition as promptly as possible after each test or alarm. Devices and components of alarm systems that are subject to wear or destruction shall have replacements available in sufficient quantities and locations for prompt restoration of the system.

Maintenance & Testing

1. The site supervisor shall assure that all employee alarm systems are maintained in operating condition except when undergoing repairs or maintenance.
2. The site supervisor shall maintain or replace power supplies as often as is necessary to assure a fully operational condition. Back-up means of alarm, such as employee runners or telephones, shall be provided when systems are out of service.
3. The site supervisor shall assure that all employee alarm systems are tested at least quarterly for reliability and adequacy.
4. The site supervisor shall assure that servicing, maintenance, and testing of employee alarms are performed by persons trained in the designed operation and functions necessary for reliable and safe operations of the system.
5. The site supervisor shall assure that manually operated actuation devices for use in conjunction with employee alarms are unobstructed, conspicuous, and readily accessible.

Emergency Contacts

Projects shall create an Emergency Contact List with; names or regular job titles of persons or departments who can be contacted for further information regarding the emergency, emergency phone number (ex:911), law enforcement dispatch number(s), nearest hospital contact number, nearest fire department contact number.

Written Emergency Action Plan

The fillable Emergency Action Plan form is located at: www.iws.support/Emergencies/EAP.

FALL PROTECTION

Integrated Water Services, Inc.
(the Company)

Purpose

The purpose of this program is to provide fall protection procedures to prevent injury to employees while performing work assignments at elevated levels.

When work is performed by a subcontractor on a company site, the contractor's written safety program shall take precedence for their employees. However, subcontractors may adopt this procedure for their use.

Scope

Applies to all Integrated Water Services employees who have work assignments at work levels that exceed 6 feet in height where guardrails or nets are not utilized. This includes work near and around excavations. Guardrails, safety nets, or personal fall arrest systems shall be used where feasible. When work is performed on a non-owned or operated site, the operator's program shall take precedence, however, this document covers Integrated Water Services employees and shall be used on owned premises, or when an operator's program doesn't exist or is less stringent.

Definitions

Anchorage: a secure point of attachment for lifelines, lanyards or deceleration devices.

Body Belt 0r Safety Belt): a strap with means both for securing it about the waist and for attaching it to a lanyard, lifeline, or deceleration device.

Body Harness: straps which may be secured about the employee in a manner that will distribute the fall arrest forces over at least the thighs, pelvis, waist, chest and shoulders with means for attaching it to other components of a personal fall arrest system.

Buckle: any device for holding the body belt or body harness closed around the employee's body.

Carabineer: see Snaphook

Connector: a device which is used to couple (connect) parts of the personal fall arrest system and positioning device systems together. It may be an independent component of the system, such as a carabineer, or it may be an integral component of part of the system (such as a buckle or D-ring sewn into a body belt or body harness, or a snap-hook spliced or sewn to a lanyard or self-retracting lanyard).

Deceleration Device: any mechanism, such as a rope grab, rip-stitch lanyard, specially-woven lanyard, tearing or deforming lanyards, automatic self-retracting lifelines/lanyards, etc., which serves to dissipate a substantial amount of energy during a fall arrest, or otherwise limit the energy imposed on an employee during fall arrest.

Deceleration Distance: the additional vertical distance a falling employee travels, excluding lifeline elongation and free fall distance, before stopping, from the point at which the deceleration device begins to operate. It is measured as the distance between the location of an employee's body belt or body harness attachment point at the moment of activation (at the onset of fall arrest forces) of the deceleration device during a fall, and the location of that attachment point after the employee comes to a full stop.

Equivalent: alternative designs, materials, or methods to protect against a hazard which the employer can demonstrate will provide an equal or greater degree of safety for employees than the methods, materials or designs specified in the standard.

Failure: load refusal, breakage, or separation of component parts. Load refusal is the point where the ultimate strength is exceeded.

Free Fall: the act of falling before a personal fall arrest system begins to apply force to arrest the fall.

Free Fall Distance: the vertical displacement of the fall arrest attachment point on the employee's body belt or body harness between onset of the fall and just before the system begins to apply force to arrest the fall. This distance excludes deceleration distance, and lifeline/lanyard elongation, but includes any deceleration device slide distance or self-retracting lifeline/lanyard extension before they operate and fall arrest forces occur.

Guardrail System: a barrier erected to prevent employees from falling to lower levels.

Infeasible: impossible to perform the inspection work using a conventional fall protection system (i.e., guardrail system, safety net system, or personal fall arrest system) or that it is technologically impossible to use any one of these systems to provide fall protection.

Lanyard: a flexible line of rope, wire rope, or strap which generally has a connector at each end for connecting the body belt or body harness to a deceleration device, lifeline, or anchorage.

Leading Edge: the edge of a floor, roof, or formwork for a floor or other walking/working surface (such as the deck) which changes location as additional floor, roof, decking, or formwork sections are placed, formed, or constructed. A leading edge is considered to be an "unprotected side and edge" during periods when it is not actively and continuously under construction.

Lifeline: a component consisting of a flexible line for connection to an anchorage at one end to hang vertically (vertical lifeline), or for connection to anchorages at both ends to stretch horizontally (horizontal lifeline), and which serves as a means for connecting other components of a personal fall arrest system to the anchorage.

Lower Levels: those areas or surfaces to which an employee can fall. Such areas or surfaces include, but are not limited to, ground levels, floors, platforms, ramps, runways, excavations, pits, tanks, material, water, equipment, structures, or portions thereof.

Personal Fall Arrest System: a system used to arrest an employee in a fall from a working level. It consists of an anchorage, connectors, a body belt or body harness and may include a lanyard, deceleration device, lifeline, or suitable combinations of these.

Positioning Device System: a body belt or body harness system rigged to allow an employee to be supported on an elevated vertical surface, such as a wall, and work with both hands free while leaning.

Rope Grab: a deceleration device which travels on a lifeline and automatically, by friction, engages the lifeline and locks so as to arrest the fall of an employee. A rope grab usually employs the principle of inertial locking, cam/level locking, or both.

Self-retracting Lifeline/Lanyard: a deceleration device containing a drum-wound line which can be slowly extracted from, or retracted onto, the drum under slight tension during normal employee movement, and which, after onset of a fall, automatically locks the drum and arrests the fall.

Snaphook: a connector comprised of a hook-shaped member with a normally closed keeper, or similar arrangement, which may be opened to permit the hook to receive an object and, when released, automatically closes to retain the object. Snaphooks are generally one of two types: (1) The locking type with a self-closing, self-locking keeper which remains closed and locked until unlocked and pressed open for connection or disconnection; or (2) The non-locking type with a self-closing keeper which remains closed until pressed open for connection or disconnection. As of January 1, 1998, the use of a non-locking snaphook as part of personal fall arrest systems and positioning device systems is prohibited.

Unprotected Sides and Edges: any side or edge (except at entrances to points of access) of a walking/working surface, e.g., floor, roof, ramp, or runway where there is no wall or guardrail system at least 39 inches (1.0 m) high.

Walking/Working Surface: any surface, whether horizontal or vertical on which an employee walks or works, including, but not limited to, floors, roofs, ramps, bridges, runways, formwork and concrete reinforcing steel but not including ladders, vehicles, or trailers, on which employees must be located in order to perform their job duties.

Work Area: the portion of a walking/working surface where job duties are being performed.

Drawing of Components

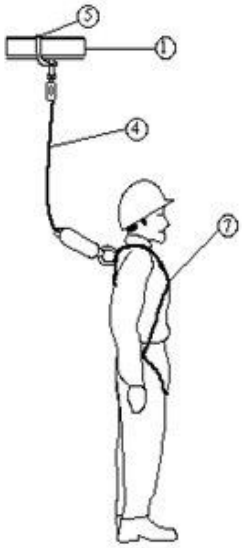

Figure A

Figure B

1. Tie-off Point
2. Lifeline
3. Rope Grab
4. Shock Absorbing Lanyard
5. Cross-Arm Strap
6. Retractable Lifeline
7. Full-Body Harness
8. Restraining Belt
9. Restraining Lanyard
10. Carabineer

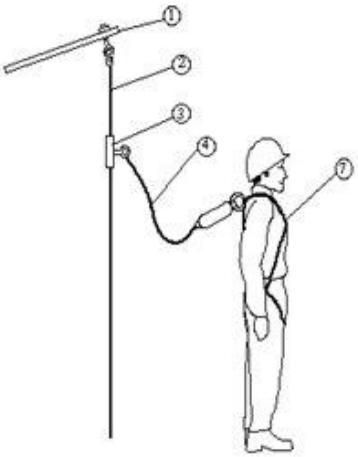

Figure C

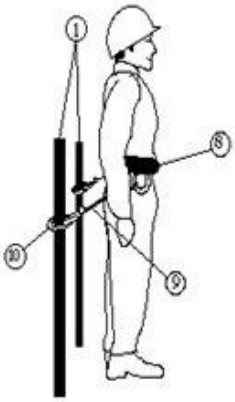

Figure D

Responsibilities

Operations Manager
It is the responsibility of the local operations manager (designated competent person) to implement this Fall Protection Program. Continual observational safety checks of work operations and the enforcement of the safety policy and procedures shall be regularly enforced. All jobs shall be pre-planned prior to the start of work.

Supervisor
The Supervisor shall ensure that all persons assigned to work at elevated levels, exceeding 6 feet in height or more above lower level and where guardrails or nets are not utilized, be protected by personal fall protection equipment.

- Supervisors shall make exposure determinations and shall discuss with their employees the extent to which scaffolds, ladders or vehicle mounted work platforms can be used.
- Ensure that fall protection equipment is available and in safe working condition.
- Provide for emergency rescue in the event of a fall. Pre-plan the job to ensure that employees have been properly trained in the use, limitations, inspections and rescue procedures and that training records are on file.

Employees
Employees shall ensure they have and use the fall protection equipment as required by this program and:

- Understand the potential hazards of working at elevated levels as well as gaining access to and from the work location.
- Understand the use and limitations of such equipment.
- Pre-plan the job with his/her supervisor to agree that the job can be done safely.
- Inspect such equipment before each use and to report defective equipment immediately to their supervisor.

Procedure

Fall protection is required whenever employees are potentially exposed to falls from heights of six feet or greater to lower levels. This includes work near and around excavations. Use of guard rails, safety net, or personal fall arrest systems should be used when the standard methods of protection are not feasible, or a greater hazard would be created.

Industry or Regulatory Standards
Fall protection equipment meets industry or regulatory standards. Fall protection equipment meets the requirements of applicable ANSI Z 359.1, ASTM or OSHA requirements. When purchasing equipment and raw materials for use in fall protection systems all applicable ANSI and ASTM requirements should be met.

Minimum Standards
Fall protection must be provided to employees working at heights that exceed applicable regulatory thresholds.

The Height at Which Fall Protection is Required
Fall protection is required whenever employees are potentially exposed to falls from heights that exceed applicable regulatory thresholds. Guard rails, safety nets or personal or fall arrest systems should be used. Some applicable regulatory thresholds may include:

- General Industry 1910.23(b) - Protection for wall openings and holes. Every wall opening from which there is a drop of more than 4 feet shall be guarded.
- Construction Industry 1926.501(b)(1) - Unprotected sides and edges. Each employee on a walking/working surface (horizontal and vertical surface) with an unprotected side or edge which is 6 feet (1.8 m) or more above a lower level shall be protected from falling by the use of guardrail systems, safety net systems, or personal fall arrest systems.
- Marine Terminals 1917.112(b)(1) - Guardrails shall be provided at locations where employees are exposed to floor or wall openings or waterside edges, including bridges or gangway-like structures leading to pilings or vessel mooring or berthing installations, which present a hazard of falling more than 4 feet (1.22 m) or into the water.
- Shipyard Industry 1915.73(d) - When employees are exposed to unguarded edges of decks, platforms, flats, and similar flat surfaces, more than 5 feet above a solid surface, the edges shall be guarded by adequate guardrails.
- Steel Erection 1926.760(a)(1) - Each employee engaged in a steel erection activity who is on a walking/working surface with an unprotected side or edge more than 15 feet (4.6 m) above a lower level shall be protected from fall hazards by guardrail systems, safety net systems, personal fall arrest systems, positioning device systems or fall restraint systems.

The following are minimum standards for Integrated Water Services employee personal fall protection systems:

- All D-rings must be a minimum of 2¼ inches (inside diameter).
- All snap hooks shall not allow pressure to be applied to the gate in the opening direction.
- No pelican hooks on lanyards should be used as a primary connection.
- Connectors shall be drop forged, pressed or formed steel, or made of equivalent materials.
- Connectors shall have a corrosion-resistant finish, and all surfaces and edges shall be smooth to prevent damage to interfacing parts of the system.
- D-rings and snap hooks shall have a minimum tensile strength of 5,000 pounds.
- D-rings and snap hooks shall be proof-tested to a minimum tensile load of 3,600 pounds without cracking, breaking, or taking permanent deformation.
- Snap hooks shall be sized to be compatible with the member to which they are connected to prevent unintentional disengagement of the snap hook. Only a locking type snap hook designed and used to prevent disengagement of the snap hook by the contact of the snap hook keeper by the connected member shall be used.
- Horizontal lifelines shall be designed, installed, and used, under the supervision of a qualified person, as part of a complete personal fall arrest system, which maintains a safety factor of at least two.
- Lanyards and vertical lifelines shall have a minimum breaking strength of 5,000 pounds. Where vertical lifelines are used, each employee shall be attached to a separate lifeline.
- Lifelines shall be protected against being cut or abraded.

- Self-retracting lifelines and lanyards which automatically limit free fall distance to 2 feet or less shall be capable of sustaining a minimum tensile load of 3,000 pounds applied to the device with the lifeline or lanyard in the fully extended position.
- Self-retracting lifelines and lanyards which do not limit free fall distance to 2 feet or less, rip stitch lanyards, and tearing and deforming lanyards shall be capable of sustaining a minimum tensile load of 5,000 pounds applied to the device with the lifeline or lanyard in the fully extended position.
- Anchorages used for attachment of personal fall arrest equipment shall be independent of any anchorage being used to support or suspend platforms and capable of supporting at least 5,000 pounds per employee attached, or shall be designed, installed, and used as part of a complete personal fall arrest system which maintains a safety factor of at least two and under the supervision of a qualified person.
- Systems used by an employee having a combined person and tool weight in excess of 310 pounds shall be modified to provide proper protection for such heavier loads.
- The attachment point of the body harness shall be located in the center of the wearer's back near shoulder level, or above the wearer's head, except when climbing.
- Body harnesses and components shall be used only for employee protection and not to hoist materials.
- Personal fall arrest systems and components subjected to impact loading shall be immediately removed from service and shall not be used again for employee protection until inspected and determined by a competent person to be undamaged and suitable for reuse.
- Provide for prompt rescue of employees in the event of a fall or shall assure the employees are able to rescue themselves.
- Personal fall arrest systems shall be inspected prior to each use for wear, damage and other deterioration, and defective components shall be removed from service.
- Personal fall arrest systems shall not be attached to guardrail systems, nor shall they be attached to hoists unless prior approval is obtained from a competent person.
- If and when a personal fall arrest system is used at hoist areas, it shall be rigged to allow the movement of the employee only as far as the edge of the walking/working surface.

Stopping a Fall

The arresting force on an employee stopped by a fall shall be limited to a maximum arresting force of 1,800 pounds when wearing a body harness.

The fall arrest system shall be rigged such that an employee can neither free fall more than 6 feet, nor contact any lower level.

The fall arrest system shall bring an employee to a complete stop and limit maximum deceleration distance an employee travels to 3.5 feet.

The fall arrest system shall have sufficient strength to withstand twice the potential impact energy of an employee free falling a distance of 6 feet, or the free fall distance permitted by the system, whichever is less.

Protection From Falling Objects

When employees are required to work in the near vicinity of others working with materials, tools, or equipment at elevated levels, Barricades around the immediate area of the overhead work shall be erected to prohibit employees from entering the barricaded area.

Employees performing work at elevated levels shall keep tools, materials, and equipment away from the edge to keep potential objects from falling over the side. Where practical, tools, etc. shall be secured with rope, wire, etc. to keep them from falling.

Open Unguarded Holes
All work areas walking/working surfaces shall be protected from falling through holes (including skylights) more than 6 feet (1.8 m) above lower levels, by personal fall arrest systems, covers, or guardrail systems erected around such holes.

Each employee on a walking/working surface shall be protected from tripping in or stepping into or through holes (including manholes) by covers.

Portable Ladders
Three-point climbing is required while ascending/descending ladders. While on ladders, both hands and one foot, or both feet and one hand shall always be in contact with the ladder.

Tools required to perform a task shall be transported by a mechanical carrier such as a tag line, suspended bucket or tool belt.

- Tools shall not be carried by hand while climbing.
- Hands must be free to grip the ladder.
- Tools shall not be carried in clothing pockets.
- Tools shall be pulled up to the job site only after reaching the area of work.

When work is to be performed from straight/extension ladders, fall protection shall be utilized when heights exceed 6 feet.

Straight ladders shall be tied off at the top to prevent them from moving. A second person shall steady the ladder at the base while it is being tied off at the top by another employee. Do not tie off fall protection equipment to the ladder.

Storage
A dedicated storage area shall be provided for the storage of fall protection equipment and all components. The storage area shall keep the equipment clean, dry, and free from oils, chemicals, paints, and excessive heat.

Inspections
Fall protection equipment shall be inspected before each use for wear, damage, other deterioration, or other defects.

Elevated Personnel Platforms
Work performed, regardless of the nature of the work, from personnel platforms raised by forklifts, cranes, scissor lifts, etc., shall require the use of a full body harness and shall be connected to the platform.

Prompt Rescue of an Employee in the Event of a Fall
Integrated Water Services shall provide for prompt rescue of employees in the event of a fall or shall assure the employees are able to rescue themselves.

The pre-planning stage prior to the beginning of each elevated work assignment shall be evaluated by the supervisor to provide rescue of employees involved in a fall.

Fall Protection Plan
This option is available only to employees engaged in leading edge work who can demonstrate that it is infeasible or it creates a greater hazard to use conventional fall protection equipment. The fall protection plan shall conform to the following provisions:

- The fall protection plan shall be prepared by a qualified supervisor and developed specifically for the site where the leading-edge work is being performed.
- The fall protection plan shall document the reasons why the use of conventional fall protection systems (guardrail systems, personal fall arrest systems, or safety net systems) are infeasible or why their use would create a greater hazard.
- The fall protection plan shall identify each location where conventional fall Protection methods cannot be used.
- These locations shall then be classified as controlled access zones.

Controlled Access Zones
When used to control access to areas where leading edge or other operations are taking place the controlled access zone shall be defined by a control line or by any other means that restricts access.

When control lines are used, they shall be erected not less than 6 feet (1.8 m) nor more than 25 feet (7.7 m) from the unprotected or leading edge.

The control line shall extend along the entire length of the unprotected or leading edge and shall be approximately parallel to the unprotected or leading edge.

The control line shall be connected on each side to a guardrail system or wall.

- Control lines shall consist of ropes, wires, tapes, or equivalent materials.
- Each line shall be flagged or otherwise clearly marked at not more than 6-foot (1.8 m) intervals with high-visibility material.
- Each line shall be rigged and supported in such a way that its lowest point (including sag) is not less than 39 inches (1 m) from the walking/working surface and its highest point is not more than 45 inches (1.3 m).
- Each line shall have a minimum breaking strength of 200 pounds.

Only employees engaged in the related work shall be permitted in the controlled access zone.

Safety Monitoring System
When the use of conventional fall protection equipment is deemed infeasible, or the use of this equipment creates a greater hazard a Fall Protection Plan which includes a safety monitoring system shall be implemented by the supervisor.

Supervisors shall designate a competent person to monitor the safety of other employees. The competent person shall be assigned to:

- Recognize fall hazards.
- Warn employees if they are unaware of fall hazard or are acting in an unsafe manner.
- Be on the same working surface and in visual contact of working employees.
- Stay close enough for verbal communication, and
- Not have other assignments that would take his/her attention from the monitoring function.

Incidents Involving Falls are Investigated
Incident investigations shall be conducted to evaluate the fall protection plan for potential updates to practices, procedures or training in order to prevent reoccurrence.

Changes to the fall protection program shall be implemented if deemed appropriate from incident corrective actions.

Training

Employees are provided training on fall protection. A training program shall be provided for each employee who might be exposed to fall hazards. Training shall enable each employee to recognize the hazards of falling and shall train each employee in the procedures to follow to minimize these hazards.

The employee will be trained in the use and operation of fall arrest systems, inspections and maintenance procedures.

Retraining is performed as necessary. Retraining shall be provided when the following are noted:

- Deficiencies in training,
- Workplace changes
- When fall protection equipment is modified.

Fall protection training is documented. Written certification records showing participants, training dates and signatures of instructors must be maintained.

Training records shall be retained in the corporate office.

Inspections

All parts of fall protection equipment, body harnesses, and associated attachments and equipment are to be visually inspected by the user for excessive wear and damage prior to each use. The Fall Protection Inspection Form can be found at the following site: www.iws.support/forms

FIRE EXTINGUISHERS

Integrated Water Services, Inc.
(the Company)

Purpose

The purpose of this program is to provide Company expectations about fire extinguisher procedures, maintenance, inspection, and use.

Scope

This procedure applies to all Integrated Water Services (the company) employees and all company locations.

When work is performed by a subcontractor on a company site, the contractor's written safety program shall take precedence for their employees. However, subcontractors may adopt this procedure for their use.

Responsibilities

Safety Director
The Safety Director is responsible for developing procedures for the use and care of fire extinguishers and for developing a training program for their proper use.

Superintendent
The Superintendent is responsible for implementing fire extinguisher training at his location.

Employees
All employees are responsible for following these provisions.

Procedure

Selection and Distribution
Portable fire extinguishers shall be provided for employee use and selected and distributed based on the classes of anticipated workplace fires as well as the size and degree of the hazard which would affect their use. Fire extinguishers used by the Company are for four classes of fires:

- Class A Fire Extinguishers: ordinary combustibles or fibrous material, such as wood, paper, cloth, rubber, and some plastics. The travel distance for employees to any extinguisher shall be 75 feet or less.
- Class B Fire Extinguishers: flammable or combustible liquids such as gasoline, kerosene, paint, paint thinners and propane. Travel distance from the Class B hazard area to any extinguisher shall be 50 feet or less.
- Class C Fire Extinguishers: energized electrical equipment, such as appliances, switches, panel boxes, and power tools. Travel distance from the Class C hazard area to any extinguishing agent shall be 50 feet or less.
- Class D Fire Extinguishers. combustible metals, such as magnesium, titanium, potassium, and sodium. The travel distance from the combustible metal working area to any extinguishing agent shall be 75 feet or less.

Labeling Of Fire Extinguishers

- Fire extinguishers are to be mounted in easily accessible locations that are indicated by a sign that reads "Fire Extinguisher".
- Fire extinguishers are to be located so that no employee will ever be more than 75 feet from an extinguisher.

- No equipment, boxes or product may be placed (even temporarily) in the way of a fire extinguisher.

Maintenance
All fire extinguishers shall be mounted no higher and no lower than four (4) feet from the floor. All fire extinguishers shall be maintained as follows:

- Fully charged and in operable condition
- Clean and free of defects
- Readily accessible at all times

Inspection, Maintenance and Testing
All fire extinguishers are to be visually inspected by Integrated Water Services employees monthly. All fire extinguishers are to receive an annual maintenance check by certified personnel from a fire extinguisher dealer. Fire extinguishers are to be inspected and re-charged by certified personnel after any use.

Any fire extinguisher that shows a loss of pressure during the monthly inspection will be inspected and re-charged by certified personnel.

Use
In the event of a fire, one employee will get the nearest fire extinguisher and use it to attempt to put the fire out. All other employees in the immediate area will prepare to evacuate if needed. All other employees in the building need to be advised that a fire is in progress.

The employee attempting to extinguish the fire will rotate the fire extinguisher to loosen the agent, break the safety seal on the handle, and pull the pin. They will then aim the extinguisher at the base of the fire and discharge it with a sweeping motion from side to side; continuing until the fire is out or the extinguisher is emptied.

Remember that a standard fire extinguisher will be emptied in about 10 to 15 seconds. If the fire is not out when the extinguisher has been completely discharged, the employee may utilize additional extinguishers. If the fire continues out of control even after extinguishing agent has been applied, all workers shall evacuate the area and call 911 for emergency services.

Training and Education
The purpose of this section is to establish training procedures which are necessary for the proper use and understanding of a fire extinguisher and incipient stage fire fighting. Training will occur prior to initial assignment and at least annually thereafter.

The training course will include written instruction accompanied by video instruction on how to use the fire extinguishers. The training course will at a minimum provide instruction on:

- General principles of a fire.
- Hazards employed with an incipient stage fire(s).
- When to "back off' (evacuate) an incipient stage fire(s).
- General fire principles of a fire extinguisher.
- Hazards associated with the use of a fire extinguisher.
- Use of a fire extinguisher.

Refresher training will be provided on an annual basis.

FIRST AID AWARENESS

Integrated Water Services, Inc.
(the Company)

Purpose

The purpose of this program is to establish the minimum first aid supplies, equipment, and actions necessary to properly respond to injuries.

Scope

This program is applicable to all Integrated Water Services employees.

When work is performed by a subcontractor on a company site, the contractor's written safety program shall take precedence for their employees. However, subcontractors may adopt this procedure for their use.

Responsibilities

- It is the responsibility of the project superintendent to ensure that first aid kits are provided and maintained.
- Employees are responsible for using first aid materials in a safe and responsible manner.
- Employees are required to inform the superintendent if first aid supplies run low.

Requirements

Planning

The project superintendent will:

- Ensure that a minimum of one employee, with a valid first Aid training certificate, shall be present to render first aid when work is being performed and where medical assistance is not available in the surrounding community.
- Ensure that provisions shall have been made prior to commencement of a project for prompt medical attention, including transportation, in case of serious injury.
- Ensure adequate first aid supplies and equipment are easily accessible when required.
- Ensure that in areas where 911 is not available, the telephone numbers of the physicians, hospitals, or ambulances to be used shall be conspicuously posted.

Medical Response

All minor first aid injuries are to be self-treated. Because of the risks presented by certain bloodborne pathogens, no employee is allowed to tend to the minor injuries of another worker while on company time unless the nature of or location of the injury is such that the injured person is unable to self-render first aid. In such a case the first aid provider is required to adhere to the requirements of this procedure.

In the absence of an infirmary, clinic, hospital, or physician, that is reasonably accessible in terms of time and distance to the worksite, which is available for the treatment of injured employees, a person who has a valid certificate in first-aid shall be available at the worksite to render first aid.

Employees authorized to render first aid will always observe universal precautions. (Universal Precautions means that the aid giver treats all bodily fluids as if they were contaminated).

If 911 is not available, refer to the Emergency Action Plan list of posted phone numbers for medical response providers. All Integrated Water Services authorized first responders shall have a cell phone as a means of communications otherwise hand held radios or landline telephones shall be used as a means of communication.

Supplies and Equipment
First aid supplies shall be easily accessible. Always follow the manufacturer's instructions when using the materials in the first aid kit.

All Company first aid kits shall contain appropriate items determined to be adequate for the environment in which they are used. If the kit is made available in an outdoor environment, the supplies must be stored in a weather proof container with contents individually sealed by the manufacturer.

The Company is responsible for ensuring the availability of adequate first aid supplies and to periodically reassess the availability of supplies and to maintain adequate inventories. First Aid kits are to be inspected:

- On the first working day of each month to verify that they are fully stocked and that no expiration dates have been exceeded, and
- Before being sent out to each job, and
- Replace any items that have exceeded their expiration dates or that have been depleted.

Where the eyes or body of any person may be exposed to injurious corrosive materials, a safety shower and/or eye wash or other suitable facilities shall be provided within the work area. Ensure expiration dates are checked and the flushing agent used is maintained in a sanitary dispenser.

An assessment of the safety data sheet (SDS) for the hazardous material(s) shall be performed to determine the type of flushing equipment and solution is required. Portable or temporary eye flushing stations must be established prior to the use of corrosive materials.

Transportation
In the event of an injury that requires clinical care, the onsite first responder will call the WorkCare (WC) injury hotline and advise the WC provider of the nature of the injury and the symptoms demonstrated by the IP. Based on the information WC is provided, WC will recommend the level of care that should be administered. If it is deemed that the injured person should be transported to a medical clinic, the WC provider will recommend the type of transportation needed and provide a name and address of the appropriate clinic. The injured person should follow the recommendations and advice of the WC provider.

Some examples of serious injuries that result in the injured person being transported to a medical provider are those resulting in severe blood loss, possible permanent disfigurement, head trauma, spinal injuries, internal injuries, loss of consciousness, fractures, serious contusions, etc. Keep in mind that the needs and wellbeing of the injured person are of the highest priority.

Proper equipment for prompt transportation of the injured person to a physician or hospital or a communication system for contacting necessary ambulance service shall be pre-planned and always available. Choices to consider include: private automobile, company vehicle, EMS vehicles including medi-vac helicopters, or any other transportation that can provide adequate safe transportation to the hospital or medical clinic in order to provide medical attention to the injured in the quickest manner without any additional complications or injuries to the injured person.

Transportation needs must be preplanned and coordinated with the transportation provider prior to an incident requiring such service.

Training
First Aid providers or selected employees must be trained by the American Red Cross or equivalent in CPR and first aid. Each of these trained and certified employees must be equipped with first aid kits and bloodborne pathogens kits.

FIT FOR DUTY

Integrated Water Services, Inc.
(the Company)

Purpose

The purpose of this procedure is to define the Company Fit for Duty requirements.

Scope

This program applies to all Company employees.

When work is performed by a subcontractor on a company site, the contractor's written safety program shall take precedence for their employees. However, subcontractors may adopt this procedure for their use.

Fitness for Duty Process

It is the goal of the Company to provide a safe workplace for all employees. To accomplish this goal, we have adopted the following fitness for duty policy requirements. Supervisors will work with the human resources department when they have a concern about an employee's fitness for duty.

All requirements will be verified through documentation.

Training and Safe Work Requirements (Skills and Knowledge)
Employees must have the required skills to perform their assigned tasks. This is evaluated and documented by any or all of the following for evaluation of the employee's required skills:

- Prior employment reference checks
- Certifications, licenses, or other documentation verification
- Task testing
- On the job monitoring
- Performance evaluations
- Training and training retention

Employees must be properly trained for their assigned tasks. Employees must receive training specific to their assigned task. Examples might be welding, instrumentation, scaffold building, equipment operator qualifications, respirator fit test, etc. based on a training matrix that reflects the job description and/or tasks being performed. All training is to be documented. The safety department will maintain the training matrix.

Safe work practices and procedures must be followed. Safe work procedures must be in place prior to work beginning. Employees shall follow company and client safety requirements. Examples may include hot work permitting, confined space, lockout tagout, electrical safety, operator safety, and other standard work practices, safety rules or procedures.

Personal Medical Reporting Requirements
As a condition of employment employees must report to the HR or safety department all medications that could impair their ability to safely perform the responsibilities of their job. The reporting must occur before the employee arrives to work.

Employee Activity and Behavior
Employee's activities and behaviors will be monitored to determine if employee should be removed from the work site if their ability to perform their duties safely is questioned.

Fit for Duty Examination

Confidentiality
Medical Records and other related records are protected by state and federal confidentiality laws and Company policy. Employee medical records will not be released to unauthorized personnel without the employee's written consent or subpoena in accordance with state and federal laws.

Self-Referrals
Employees are responsible for notifying their supervisor if they are fatigued to the point of not being able to perform their duties safely. Employees must be physically and mentally fit to perform their job functions safely. Employees must take responsibility for their own safety as well as not reporting to work in a condition so as to endanger the safety of their fellow workers.

Disciplinary action may occur for an employee reporting to work in a condition which could endanger their own safety or the safety of any other person(s). See below for Management Referral in case there is a question about the employee's ability to work safely.

Management Referral
Management personnel are responsible for monitoring the attendance, performance, and behavior of their employees. When an employee's performance and/or behavior (including the odor of alcohol or possible use of any illegal substance) appears to be present, it is every manager's responsibility to challenge the employee's behavior and the ability to function by removing the employee from the job.

Due to the safety issues involved, supervisors have a special responsibility to implement this policy in a consistent and fair manner.

FORKLIFT & INDUSTRIAL TRUCKS

Integrated Water Services, Inc.
(the Company)

Purpose

The purpose of this program is to establish requirements for the safe operation and use of Powered Industrial Trucks.

Scope

This program applies to all Integrated Water services employees who operate a Powered Industrial Truck in the scope of their job duties and assignments.

When work is performed by a subcontractor on a company site, the contractor's written safety program shall take precedence for their employees. However, subcontractors may adopt this procedure for their use.

Definitions

Authorized Employee – A person, at least 18 years of age and who has completed the company's required safety training for the safe operations of forklifts.

Forklift (Powered Industrial Truck) – Any mechanical device used for the movement of supplies, material or a product that is powered by an electric motor or an internal combustion engine.

Key Responsibilities

Manager/Supervisor

- Shall ensure that each powered forklift operator is competent to operate a forklift safely, as demonstrated by the successful completion of the training and evaluation program.
- Shall ensure that all forklifts are inspected before each shift and all repairs are made before the forklift is operated.

Employees

- Shall be current on applicable training.
- Operate forklift in accordance with the forklift standards and manufacture requirements.
- Inspect forklift at the start of each shift and remove the equipment from service if hazardous defects are found.
- Operate forklift in a safe manner.

Procedure

General

All approved forklifts shall have a manufactures identification plate attached showing all specifications of the forklift and that the forklift is accepted by a nationally recognized testing laboratory.

Modifications and additions that affect capacity and safe operation shall not be performed without manufacturer's prior written approval. Capacity, operation, and maintenance instruction plates, tags, or decals shall be changed to reflect the modification or addition.

If the forklift is equipped with front-end attachments other than factory installed attachments, the supervisor shall ensure that the forklift is marked to identify the attachments and show the approximate weight of the forklift and attachment combination at maximum elevation with load laterally centered.

The operator shall see that all nameplates and markings are in place and are maintained in a legible condition.

All forklifts shall be equipped with safety seat belts. All forklifts shall be equipped with a horn and a backup alarm. Outdoor forklifts shall be equipped with a beacon light, headlights, and taillights.

Safety Guards
Forklifts shall be fitted with an overhead rollover cage, as per manufacturers specifications.

If the type of load presents a hazard to the operator, the forklift shall be equipped with a vertical load backrest extension, as per manufactures specifications.

Training
Training shall consist of a combination of formal instruction (e.g., lecture, discussion, interactive computer learning, video tape, and written material), practical training (demonstrations performed by the trainer and practical exercises performed by the trainee) and evaluation of the operator's performance in the workplace.

All operator training and evaluation shall be conducted by authorized persons who have the knowledge, documented training, and experience to train powered industrial truck operators and evaluate their competence.

Each operator is required to be re-evaluated every three years.

Training shall include the following topics:

1. Operating instructions, warnings, and precautions for the types of truck the operator will be authorized to operate,
2. Differences between the truck and the automobile,
3. Truck controls and instrumentation: where they are located, what they do, and how they work,
4. Engine or motor operation,
5. Steering and maneuvering,
6. Visibility (including restrictions due to loading),
7. Fork and attachment adaptation, operation, and use limitations,
8. Vehicle capacity,
9. Vehicle stability,
10. Any vehicle inspection and maintenance that the operator will be required to perform,
11. Refueling and/or charging and recharging of batteries,
12. Operating limitations,
13. Any other operating instructions, warnings, or precautions listed in the operator's manual for the types of vehicle that the employee is being trained to operate,
14. Surface conditions where the vehicle will be operated,
15. Composition of loads to be carried and load stability,
16. Load manipulation, stacking, and unstacking,

17. Pedestrian traffic in areas where the vehicle will be operated,
18. Narrow aisles and other restricted places where the vehicle will be operated,
19. Hazardous (classified) locations where the vehicle will be operated,
20. Ramps and other sloped surfaces that could affect the vehicle's stability,
21. Closed environments and other areas where insufficient ventilation or poor vehicle maintenance could cause a buildup of carbon monoxide or diesel exhaust,
22. Other unique or potentially hazardous environmental conditions in the workplace that could affect safe operation, and
23. The requirements of CFR 1910.178 (Powered Industrial Trucks).

Mandatory refresher training shall be provided when unsafe operations are observed, after an incident, changes in conditions or any time the supervisor feels an operator requires refresher training.

Certification

Only trained and certified operators, including supervisors, are allowed to operate the device (this includes refresher training requirements).

The trainer shall certify in writing that each operator has been trained and evaluated as required.

The certification shall include the name of the operator, the date of the training, the date of the evaluation and the identity of the person(s) performing the training and/or evaluation.

Operations

General

- All operators shall wear a safety seat belt when operating a forklift.
- Forklifts shall not be driven up to anyone standing in front of a bench or other fixed object.
- No person shall be allowed to stand or pass under the elevated portion of any forklift, whether loaded or empty.
- Unauthorized personnel shall not be permitted to operate forklifts.
- No riders or passengers are permitted.
- It is prohibited for arms or legs to be placed between the uprights of the mast or outside the running lines of the forklift.
- When a forklift is left unattended the forks shall be fully lowered, controls shall be neutralized, power shall be shut off, and brakes set.
- Wheels shall be blocked if the forklift is parked on an incline.
- A forklift is unattended when the operator is 25 ft. or more away from the vehicle, which remains in view, or whenever the operator leaves the forklift, and it is not in view.
- When the operator of a forklift is dismounted and within 25 ft. of the forklift still in view, the forks shall be fully lowered, controls neutralized, and the brakes set to prevent movement.
- A safe distance shall be maintained from the edge of ramps or platforms while on any elevated dock or platform.
- Forklifts shall not be used for opening or closing freight doors.

- Brakes shall be set and wheel blocks shall be in place to prevent movement of trucks or trailers while loading or unloading.
- Fixed jacks may be necessary to support a semi-trailer during loading or unloading when the trailer is not coupled to a tractor.
- The flooring of trucks and trailers shall be checked for breaks and weakness before they are driven on.
- There shall be sufficient headroom under overhead installations, lights, pipes, sprinkler system, etc.
- An overhead guard (cages) shall be used as protection against falling objects.

Traveling

- The operator shall slow down and sound the horn at cross isles and other locations where vision is obstructed.
- If the load being carried obstructs forward view, the operator shall be required to travel with the load trailing.
- The operator shall be required to look in the direction of, and keep a clear view of the path of travel.
- Grades shall be ascended or descended slowly.
- When ascending or descending grades in excess of 10 percent, loaded forklifts shall be driven with the load upgrade.
- On all grades the load and forks shall be tilted back if applicable and raised only as far as necessary to clear the road surface.
- Under all travel conditions the forklift shall be operated at a speed that will permit it to be brought to a stop in a safe manner.
- Stunt driving and horseplay are prohibited.
- The operator shall slow down for wet and slippery floors.
- Dock board or bridge plates shall be properly secured before they are driven on.
- Dock board or bridge plates shall be driven over carefully and slowly, and their rated capacity never exceeded.
- While negotiating turns, speed shall be reduced to a safe level by means of turning the hand steering wheel in a smooth, sweeping motion.
- Except when maneuvering at a very low speed, the hand steering wheel shall be turned at a moderate, even rate.

Loading

- Only stable or safely arranged loads shall be handled.
- Caution shall be exercised when handling off-center loads that cannot be centered.
- Only loads within the rated capacity of the forklift shall be handled.
- Forklifts equipped with attachments shall be operated as partially loaded forklifts when not handling a load.
- The forks shall be placed under the load as far as possible, and the mast shall be carefully tilted backward to stabilize the load.

- Extreme care shall be used when tilting the load forward or backward, particularly when high tiering.
- Tilting forward with the forks elevated shall be prohibited except to pick up a load.
- An elevated load shall not be tilted forward except when the load is in a deposit position over a rack or stack.
- When stacking or tiering, only enough backward tilt to stabilize the load shall be used.

Operation of the Truck

- If at any time a forklift is found to be in need of repair, defective, or in any way unsafe, the forklift shall be taken out of service until it has been restored to safe operating condition.
- Fuel tanks shall not be filled while the engine is running.
- The spillage of oil or fuel shall be carefully washed away or completely evaporated and the fuel tank cap replaced before restarting engine.
- When fueling with Liquefied Petroleum Gas (LPG), precautions and handling requirements set forth in the "Compressed Gas Cylinders" procedure shall be followed.
- No forklift shall be operated with a leak in the fuel system.
- Open flames shall not be used for checking electrolyte level in storage batteries, gasoline level in fuel tanks, or for checking for the source of a propane leak.
- Operator must verify trailer chocks, supports, and dock plates are secured prior to loading/unloading.

Maintenance and Inspection of Forklifts

- Only authorized personnel shall perform maintenance or make repairs.
- Those repairs to the fuel and ignition systems of forklifts, which involve fire hazards, shall be conducted only in locations designated for such repairs.
- Forklifts in need of repairs to the electrical system shall have the battery disconnected prior to such repairs.
- Only parts equivalent with those used in the original design shall replace all parts of any forklift requiring replacement parts.
- Forklifts shall not be altered so that the relative positions of the various parts are different from what they were when originally received from the manufacturer, nor shall they be altered either by the addition of extra parts not provided by the manufacturer or by the elimination of any parts.
- Additional counter weighting of fork trucks shall not be done unless approved by the truck manufacturer.
- Forklifts shall be inspected daily by the operator before being placed in service and shall not be placed in service if the inspection shows any condition adversely affecting the safety of the forklift.
- Inspections shall be made at least daily or prior to each shift. Operators must insure the vehicle is safe prior to operating.
- Where forklifts are used on a round-the-clock basis, they shall be inspected before each shift.
- Hazardous defects, when found, shall be immediately reported to the supervisor, and corrected before operating the forklift.

- When the temperature of any part of any forklift is found to be in excess of its normal operating temperature, thus creating a hazardous condition, the forklift shall be removed from service and not returned to service until the cause for such overheating has been eliminated.
- Forklifts shall be kept in a clean condition, free of lint, excess oil, and grease.
- Noncombustible agents, where at all possible, shall be used for cleaning trucks.
- Low flash point (below 100 degrees F.) solvents shall not be used.
- High flash point (at or above 100 degrees F.) solvents may be used if precautions regarding toxicity, ventilation, and fire hazard are mitigated with the agent or solvent used.

Safety and Quality Good Catch Program

Integrated Water Services, Inc.
(the Company)

Purpose

The purpose of the Safety-Quality Good Catch Program is to increase the level of safety and quality within all operations.

Scope

This program applies to all Company employees, subcontractors, inspectors, and visitors.

Procedures

What is a Good Catch
A Good Catch is the recognition of an event or circumstance that had the potential to cause injury, damage, poor quality, or any other loss to the Company, but did not occur thanks to a timely intervention or correction by a worker or other person.

The Good Catch Program
The Good Catch Program is designed as a tool to report and positively recognize good catches in all company activities.

The Goal of the Good Catch Program is to increase the level of safety and quality in the field.

This is done by engaging all personnel on IWS and subsidiary projects to proactively:

- Identify any safety or quality issues
- Stop any unsafe or non-quality work or activity
- Coach fellow team members

Document Good Catches
When a person observes a less than desirable event, condition, behavior, or quality, they must call a pause to the activity and make sure the condition is corrected before continuing. When the “Good Catch" condition is corrected, the person who called the Good Catch must fill out the Good Catch Form located at the Forms tab of the support center.

The completed form will be delivered to the Safety Department electronically and then it will be shared throughout the company.

Examples of what are considered to be Good Catches:

- Preventing an overhead line strike or dig in
- Preventing an incorrect weld procedure or bolt-up
- Preventing an injury or incident
- Stopping a team member from using equipment out of calibration
- Preventing the backfill of a pipeline with an incorrect material
- Preventing a vehicle incident by improving the flow of traffic, parking, or vehicle use
- Stopping a co-worker from using an incorrect tool
- Failure to conduct proper slump test on concrete
- Improper placement of threaded bolts or rebar in concrete

- Failure to adequately vibrate concrete
- Improper measurements of facility or layouts
- Poor planning or no planning
- Identifying errors in published materials such as the PEM
- Coworkers taking shortcuts
- Standing under a suspended load
- Failure to wear fall protection
- Trip hazard(s)
- Falling object hazard
- Unsafe machinery
- Wet floor or slippery working surface
- Ordering of the wrong material or supplies
- Theft

Good Catch Reward Program

A worker who submits a Good Catches that scores as a 4 or 5 on the risk rank matrix will be eligible for a Good Catch reward. The safety department will send the submitter a pin number that can be used as a key to open the Good Catch order form.

To redeem a Good Catch reward, go to the Supply Store tab of the support center and select the Good Catches option. Next, the submitter will be prompted to enter the pin number that was sent via email from the safety department. Once into the store the pin can be used one time only to select one reward. The reward will be shipped to the address of the submitter.

HAND & POWER TOOLS

Integrated Water Services, Inc.
(the Company)

Purpose

The purpose of this program is to provide requirements for the safe operation of hand and power tools and other portable tools, including proper guarding.

Scope

This program applies to all Integrated Water Services employees who use hand and power tools.

When work is performed by a subcontractor on a company site, the contractor's written safety program shall take precedence for their employees. However, subcontractors may adopt this procedure for their use.

Responsibilities

Any tool which is not in compliance with any applicable requirement of this plan is prohibited and shall either be identified as unsafe by tagging or locking the controls to render them inoperable or they shall be physically removed from operation.

Managers/Supervisors

- Ensure that all employees using portable tools have been trained and fully understand the operations and maintenance procedures of such tools, including their proper use.
- Provide employees with PPE that may be needed for the safe operation of portable tools.

Employees

- Shall ensure they use the correct tool in the correct way for each task.
- Shall follow manufactures safety and operating instructions while using tools.

Requirements

General

All tools shall be of an approved type and maintained in a good safe working condition.

- Tools must be visually inspected prior to each use.
- All employees have the authority and responsibility to condemn damaged or unsafe tools.
- Unsafe tools shall be tagged with a "DO NOT USE OR OPERATE" tag to prevent their use or taken out of service for repair or discarded.
- Employees shall always use the proper tool for the job to be performed. Makeshift and substitute tools shall not be used.
- Hammers with metal handles, screwdrivers with metal in the handle, and metallic measuring tapes shall not be used on or near energized electrical circuit or equipment.
- Tools shall not be thrown from place to place or from person to person; tools that must be raised or lowered from one elevation to another shall be placed in tool bags/buckets firmly attached to hand lines.
- Tools shall never be placed unsecured on elevated places.
- Impact tools such as chisels, punches, and drift pins that become mushroomed or cracked shall be dressed, repaired, or replaced before further use.
- Chisels, drills, punches, ground rods, and pipes shall be held with suitable holders or tongs (not with the hands) while being struck by another employee.

- Shims shall not be used to make a wrench fit the nut.
- Wrenches with sprung or damaged jaws shall not be used.
- Tools shall be used only for the purposes for which they have been approved.
- Tools with sharp edges shall be stored and handled so that they will not cause injury or damage. They shall not be carried in pockets unless suitable protectors are in use to protect the edge.
- Wooden handles that are loose, cracked, or splintered shall be replaced. The handle shall not be taped or lashed with wire as a means of repair.
- Tools shall not be left lying around where they may cause a person to trip or stumble.
- When working on or above open grating, a canvas or other suitable covering shall be used to cover the grating to prevent tools or parts from dropping to a lower level where others are present, or the danger area shall be barricaded or guarded.
- The insulation on hand tools shall not be depended upon to protect users from high voltage shock (except approved live line tools).

Portable Electric Tools

- The non-current carrying metal parts of portable electric tools such as drills, saws, and grinders shall be effectively grounded when connected to a power source unless:
    - The tool is an approved double-insulated type, or
    - The tool is connected to the power supply by means of an isolating transformer or other isolated power supply.
- All powered tools shall be examined prior to use to ensure safe condition and the presence of all applicable safety devices.
- Powered tools shall be used only within their design specifications and shall be operated in accordance with the manufacturer's instructions.
- The use of electric cords for hoisting or lowering tools shall not be permitted.
- All tools shall be kept in good repair and shall be disconnected from the power source while repairs or adjustments are being made.
- Electrical tools shall not be used where there is a hazard of flammable vapors, gases, or dusts without a valid Hotwork Permit.
- Ground fault circuit interrupters or use of an Assured Grounding Program shall be used with portable electric tools. This does not apply to equipment run off of portable or truck mounted generators at 5kw or less that are isolated from ground or to equipment ran directly off of secondaries.

Pneumatic Tools

- Pneumatic tools shall never be pointed at another person.
- Pneumatic power tools shall be secured to the hose or whip by some positive means to prevent the tool from becoming accidentally disconnected.
- Safety clips or retainers shall be securely installed and maintained on pneumatic impact (percussion) tools to prevent attachments from being accidentally expelled.
- Compressed air shall not be used for cleaning purposes, except when the pressure is reduced to less than 30 psi and then only with effective chip guarding and personal protective equipment.
- The manufacturers stated safe operating pressure for hoses, pipes, valves, filters, and other fittings shall not be exceeded.
- The use of hoses for hoisting or lowering tools shall not be permitted.
- Before making adjustments or changing air tools, unless equipped with quick-change connectors, the air

shall be shut off at the air supply valve ahead of the hose. The hose shall be bled at the tool before breaking the connection.

- Compressed air tools, while under pressure, must not be left unattended.
- All connections to air tools shall be made secure before turning on air pressure.
- Air at the tool shall not be turned on until the tool is properly controlled.
- All couplings and clamps on pressurized air hoses shall be bridged (pinned) with suitable fasteners.
- Hose and hose connections used for conducting compressed air to utilization equipment shall be designed for the pressure and service to which they are subjected.
- Use only approved end-fitting clamps (screw type heater hose clamps are not acceptable).
- While blowing down hose, do not point it toward people.
- Power tools are to be operated only by competent workers who have been trained in their proper use.
- Conductive hoses should not be used near energized equipment.
- Foot protection shall be worn while operating paving breakers, tampers, rotary drills, clay spades, and similar impactor-type tools or at other times when instructed by supervision.
- All pneumatically driven nailers, staplers, and other similar equipment provided with automatic fastener feed, which operate at more than 100 PSI at the tool face shall have a safety device on the muzzle to prevent the tool from ejecting fasteners, unless the muzzle is in contact with the work surface.
- Airless spray guns of the type which atomize paints and fluids at high pressures (1,000 pounds or more per square inch) shall be equipped with automatic or visible manual safety devices which will prevent pulling of the trigger to prevent a release of the paint or fluid until the safety device is manually released.
    - In lieu of the above, a diffuser nut (which will prevent high pressure), high velocity release (while the nozzle tip is removed), plus a nozzle tip guard (which will prevent the tip from coming into contact with the operator), or other equivalent protection shall be provided.

Powder Actuated Tools (Tools actuated by an explosive charge)

- Only those employees who have been certified in their use shall operate powder actuated tools.
- Explosive charges shall be carried and transported in approved containers.
- Operators and assistants using these tools shall be protected by means of eye, face, and hearing protection.
- Tools shall be maintained in good condition and serviced regularly by qualified persons. The material upon which these tools are to be used shall be examined before work is started to determine its suitability and to eliminate the possibility of hazards to the operator and others.
- Prior to use, the operator shall ensure that the protective shield is properly attached to the tool.
- Before using a tool, the operator shall inspect it to determine to his satisfaction that it is clean, that all moving parts operate freely, all guards and safety devices are in place, and that the barrel is free from obstructions.
- Before using tools, the operator shall read and become familiar with the manufacturers operating guidelines and procedures.
- When a tool develops a defect during use, the operator shall immediately cease to use it, until it is properly repaired in accordance with the manufacture's specifications.
- Tools shall not be loaded until just prior to the intended firing time, nor shall an unattended tool be left loaded. Empty tools are not to be pointed at any workmen.
- In case of a misfire, the operator shall hold the tool in the operating position for at least 30 seconds. He shall then try to operate the tool a second time. He shall wait another 30 seconds, holding the tool in the operating position; then he shall proceed to remove the explosive load in strict accordance with the

manufacturer's instructions.

- A tool shall never be left unattended in a place where it would be available to unauthorized persons.
- Fasteners shall not be driven into very hard or brittle materials including, but not limited to, cast iron, glazed tile, surface hardened steel, glass block, live rock, face brick, or hollow tile.
- Driving into materials easily penetrated shall be avoided unless such materials are backed by a substance that will prevent the pin or fastener from passing completely through and creating a flying missile hazard on the other side.
- Tools shall not be used in an explosive or flammable atmosphere.

Hydraulic Power Tools

- The fluid used in hydraulic powered tools shall be fire-resistant fluids approved under Schedule 30 of the U.S. Bureau of Mines Department of the Interior and shall retain its operating characteristics at the most extreme temperatures to which it will be exposed.
- The manufacturer's safe operating pressures for hoses, valves, pipes, filters, and other fittings shall not be exceeded.
- All hydraulic tools, which are used on or around energized lines or equipment, shall use non-conducting hoses having adequate strength for the normal operating pressures.

Hydraulic Jacks

Loading and Marking

- The operator shall make sure that the jack used has a rating sufficient to lift and sustain the load.
- The rated load shall be legibly and permanently marked in a prominent location on the jack by casting, stamping, or other suitable means.

Operation and Maintenance

- In the absence of a firm foundation, the base of the jack shall be blocked. If there is a possibility of slippage of the cap, a block shall be placed in between the cap and the load.
- The operator shall watch the stop indicator, which shall be kept clean, in order to determine the limit of travel. The indicated limit shall not be exceeded.
- After the load has been raised, it shall be cribbed, blocked, or otherwise secured at once.
- Hydraulic jacks exposed to freezing temperatures shall be supplied with adequate antifreeze liquid.
- All jacks shall be properly lubricated at regular intervals.

Each jack shall be thoroughly inspected before each use. Jacks, which are in unsafe condition, shall be tagged accordingly, and shall not be used until repairs are made.

Abrasive Blast Cleaning Nozzles

The blast cleaning nozzles shall be equipped with an operating valve, which must be held open manually. A support shall be provided on which the nozzle may be mounted when it is not in use.

Fuel Powered Tools

All fuel-powered tools shall be stopped while being refueled, serviced, or maintained, and fuel shall be transported, handled, and stored in accordance with the Flammable and Combustible Liquids Program.

When fuel powered tools are used in enclosed spaces, the applicable requirements for concentrations of toxic gases and use of personal protective equipment shall be adhered to.

Guarding Portable Tools

Guards shall be in place and operable at all times while the tool is in use. The guard may not be manipulated in such a way that will compromise its integrity or compromise the protection in which it is intended. Guarding shall meet the requirements set forth in ANSI B15.1.

Portable Circular Saws

- All portable, power-driven circular saws having a blade diameter greater than 2 in. shall be equipped with guards above and below the base plate or shoe.
- The upper guard shall cover the saw to the depth of the teeth, except for the minimum arc required to permit the base to be tilted for bevel cuts.
- The lower guard shall cover the saw to the depth of the teeth, except for the minimum arc required to allow proper retraction and contact with the work.
- When the tool is withdrawn from the work, the lower guard shall automatically and instantly return to a guarded position.
- All cracked saw blades shall be removed from service and discarded.

Switches and Controls

- All handheld powered tools, circular saws, drills, tappers, fastener drivers, horizontal or vertical angle grinders, etc. shall be with a constant pressure switch or control and may have a lock-on control provided that turnoff can be accomplished by a single motion of the same finger or fingers that turn it on.
- All hand-held powered circular saws having a blade diameter greater than 2 inches, electric, hydraulic, or pneumatic chain saws, and percussion tools without positive accessory holding means shall be equipped with a constant pressure switch or control that will shut off the power when the pressure is released. All hand-held gasoline powered chain saws shall be equipped with a constant pressure throttle control that will shut off the power to the saw chain when the pressure is released.
- The operating control on hand-held power tools shall be so located as to minimize the possibility of its accidental operation, if such accidental operation would constitute a hazard to employees.
- Grounding of portable electric powered tools shall meet the electrical requirements that can be found in the Electrical Safety Program. All electric power tools shall be equipped with a three-prong plug.

Portable Abrasive Wheels

Guards

- Guards shall be made of steel or other material with adequate strength.
- A safety guard shall cover the spindle end, nut and flange projections. The safety guard shall be mounted so as to maintain proper alignment with the wheel, and the strength of the fastenings shall exceed the strength of the guard.

Safety Guards Exemptions

- Wheels used for internal work while within the work being ground.
- Mounted wheels used in portable operations 2 inches and smaller in diameter.
- Types 16, 17, 18, 18R, and 19 cones, plugs, and threaded hole pot balls where the work offers protection.
- Safety guards on all operations where the work provides a suitable measure of protection to the operator may be so constructed that the spindle end, nut and outer flange are exposed. Where the nature of the work is such as to entirely cover the side of the wheel, the side covers of the guard may be omitted.
- The spindle end, nut, and outer flange may be exposed on portable machines designed for, and used with, type 6, 11, 27, and 28 abrasive wheels, cutting off wheels, and tuck-pointing wheels.

Mounting and Inspection of Abrasive Wheels

- Immediately before mounting, all wheels shall be closely inspected, and a ring test performed, to make sure they have not been damaged in transit, storage, or otherwise.
- Ring test – “tap" wheels about 45 degrees each side of the vertical centerline and about 1 or 2 inches from the periphery; then rotate the wheel 45 degrees and repeat the test; a sound and undamaged wheel will give a clear metallic tone - If cracked, there will be a dead sound and not a clear "ring.”
- The spindle speed of the machine shall be checked before mounting of the wheel to be certain that it does not exceed the maximum operating speed marked on the wheel.
- Grinding wheels shall fit freely on the spindle and remain free under all grinding conditions.
- A controlled clearance between the wheel hole and the machine spindle (or wheel sleeves or adaptors) is essential to avoid excessive pressure from mounting and spindle expansion.
- The machine spindle shall be made to nominal (standard) size plus zero minus .002 inch, and the wheel hole shall be made suitably oversized to assure safety clearance under the conditions of operating heat and pressure.
- All contact surfaces of wheels, blotters, and flanges shall be flat and free of foreign matter.
- When a bushing is used in the wheel hole it shall not exceed the width of the wheel and shall not contact the flanges.

Portable Grinders

Special "revolving cup guards" which mount behind the wheel and turn with it shall be used. They shall be made of steel or other material with adequate strength and shall enclose the wheel sides upward from the back for one-third of the wheel thickness. It is necessary to maintain clearance between the wheel side and the guard. The clearance shall not exceed one-sixteenth inch.

Vertical portable grinders, also known as right angle grinders, shall have a maximum exposure angle of 180 degrees and the guard shall be located between the operator and the wheel during use. Adjustment of the guard shall ensure that pieces of an accidentally broken wheel will be deflected away from the operator.

Other Portable Grinders

The maximum angular exposure of the grinding wheel periphery and sides for safety guards used on other portable grinding machines shall not exceed 180 degrees and the top half of the wheel shall be enclosed at all times.

Personal Protective Equipment

Employees using hand and power tools and exposed to the hazard of falling, flying, abrasive, and splashing objects, or exposed to harmful dust, fumes, mists, vapors or gases shall be provided with the particular PPE necessary to protect them from the hazard.

Training

All employees shall be training on hand and power tools on an annual basis.

HAZARD COMMUNICATION

Integrated Water Services, Inc.
(the Company)

Purpose

The purpose of this program is to ensure the safe use of hazardous chemical substances.

Introduction
In 2012, OSHA revised the Hazard Communication Standard (HCS) to align with the Globally Harmonized System of Classification and Labeling of Chemicals (GHS). This program aligns with OSHA Hazard Communication Standard as updated to GHS Revision 7 (2024 final rule).

It spells out how Integrated Water Services will inventory chemicals stored and used, obtain and use Safety Data Sheets, maintain labels on chemical substances and train employees about the hazards of chemicals they are likely to encounter on the job.

Preparation of this program indicates our continuing commitment to safety among our employees in all of our locations.

- Each facility is expected to follow this program and maintain its work areas in accordance with these requirements.
- Employees, their designated representatives, and government officials must be provided copies of this program upon request.
- In addition to the program, other information required as part of our hazard communication effort is available to workers upon request.
- Asking to see this information is an employee's right.
- Using this information is part of our shared commitment to a safe, healthy workplace.

Scope

This program is applicable to all Integrated Water Services employees.

When work is performed by a subcontractor on a company site, the contractor's written safety program shall take precedence for their employees. However, subcontractors may adopt this procedure for their use.

Responsibilities

Safety Manager or Designee
The Safety Manager, or their designee, is responsible for administering the hazard communication program. This person is also responsible for:

- Reviewing the potential hazards and safe use of chemicals.
- Maintaining a list of all hazardous chemicals and a master file of SDSs.
- Ensuring that all containers are labeled, tagged or marked properly.
- Providing new-hire and annual awareness training for employees and contractors.
- Maintaining training records.
- Identifying hazardous chemicals used in nonroutine tasks and assessing their risks.
- Informing outside contractors who are performing work on Integrated Water Services property about potential hazards.

- Reviewing the effectiveness of the hazard communication program and making sure that the program satisfies the requirements of all applicable federal, state or local hazard communication requirements.

Employees

- Employees are responsible for following the requirements in the Hazard Communication Program.
- Any employee who transfers any material from one container to another is responsible for labeling the new container with all required information.
- All employees and contractors are responsible for learning the requirements of this section and for applying them to their daily work routine.
- Identifying hazards before starting a job.
- Reading container labels and SDSs.
- Notifying the supervisor of torn, damaged, or illegible labels or of unlabeled containers.
- Using controls and/or personal protective equipment provided by the Company to minimize exposure.
- Following Company instructions and warnings pertaining to chemical handling and usage
- Properly caring for personal protective equipment, including proper use, routine care and cleaning, storage, and replacement.
- Knowing and understanding the consequences associated with not following Integrated Water Services policy concerning the safe handling and use of chemicals.
- Participating in Integrated Water Services training.

Procedure

Inventory of Hazardous Chemicals

An inventory of hazardous chemicals is maintained. An inventory of all hazardous chemicals used by Integrated Water Services should be maintained. Each chemical on the list should have the same name as shown on its corresponding Safety Data Sheet (SDS).

Hazards associated with combustible dust shall be identified and addressed where applicable.

The Hazardous Chemical List is updated as necessary and at least annually by the Safety Manager or their designee. The Hazardous Chemical List must be available for review upon request.

Safety Data Sheets (SDS)

Safety Data Sheets (SDS) are obtained for all hazardous chemicals. Chemical manufacturers are responsible for developing SDSs. Integrated Water Services shall have a SDS for each chemical used.

The purchasing of any potentially hazardous chemical products from any supplier that does not provide an appropriate Safety Data Sheet in a timely fashion is prohibited.

Safety Data Sheets (SDS) are readily available to employees and contractors at www.iws.support in the Right To Know tab. SDS must be made available, upon request, to employees and contractors, their designated representatives, the Assistant Secretary and the Director.

The Safety Data Sheets must be kept in the online SDS library for as long as the chemical is onsite or used by the facility.

The Manager is responsible for seeing that the Chemical Inventory List is maintained, is current and is complete.

SDS' for hazardous materials to which Integrated Water Services employees have been exposed must be maintained after the employee leaves the employment of Integrated Water Services.

Methods to be Used to Inform Employees of the Hazards of Non-Routine Tasks
The methods that Integrated Water Services will use to inform employees and contractors of the hazards of non-routine tasks (i.e., the cleaning of tanks, etc.) and the hazards associated with chemicals contained in unlabeled pipes in their work areas include:

- Conducting a Job Hazard Assessment (JHA).
- Employees will be advised of methods and special precautions, PPE and the hazards associated with chemicals and the hazards associated with chemicals contained in unlabeled pipes in their work areas.
- In the unlikely event that such tasks are required, the supervisor, or designee, will provide an SDS for the involved chemical.

The Use and Care of Labels and Other Forms of Warning
Containers of hazardous chemicals are labeled. Container labels should contain the following information:

- Product identifier
- Signal word
- Hazard statement
- Pictogram(s)
- Precautionary statement(s), and
- Name, address and telephone number of the chemical manufacturer, importer or other responsible party.

The Manager will ensure that all hazardous chemicals used or stored in the facility are properly labeled.

Damaged labels or labels with incomplete information shall be reported immediately.

Workplace labels or other forms of warning will be legible, in English and prominently displayed on the container or readily available in the work area throughout each work shift.

If employees and contractors speak languages other than English, the information in the other language(s) may be, at the discretion of the Company, added to the material presented as long as the information is presented in English as well.

Integrated Water Services will use the GHS labeling system for secondary containers for Company owned or managed chemical inventories.

Portable containers into which hazardous chemicals are transferred from labeled containers that are intended for immediate use of the employee who performs the transfer, do not require a label.

If the portable container will be used by more than one employee or used over the course of more than one shift, the container must be labeled.

Chemicals received from vendors that are not properly labeled must be rejected.

INTEGRATED WATER SERVICES

Pictograms and Hazards

Health Hazard	Flame	Exclamation Mark
• Carcinogen • Mutagenicity • Reproductive Toxicity • Respiratory Sensitizer • Target Organ Toxicity • Aspiration Toxicity	• Flammables • Pyrophorics • Self-Heating • Emits Flammable Gas • Self-Reactives • Organic Peroxides	• Irritant (skin and eye) • Skin Sensitizer • Acute Toxicity (harmful) • Narcotic Effects • Respiratory Tract Irritant • Hazardous to Ozone Layer (Non-Mandatory)
Gas Cylinder	**Corrosion**	**Exploding Bomb**
• Gases Under Pressure	• Skin Corrosion/ Burns • Eye Damage • Corrosive to Metals	• Explosives • Self-Reactives • Organic Peroxides
Flame Over Circle	**Environment** (Non-Mandatory)	**Skull and Crossbones**
• Oxidizers	• Aquatic Toxicity	• Acute Toxicity (fatal or toxic)

Example Label

HS85
Batch number: 85L6543

Warning
Harmful if swallowed

Wash hands and face thoroughly after handling. Do not eat, drink or smoke when using this product. Dispose of contents/container in accordance with local, state and federal regulations.

First aid:
If swallowed: Call a doctor if you feel unwell. Rinse mouth.

GHS Example Company, 123 Global Circle, Anyville, NY 130XX
Telephone (888) 888-8888

Multi-Employer Job Sites
Chemical information is provided to employees and contractors on multiple employer worksites.

The online support center (www.iws.support) provides specific methods for providing other employer information concerning hazardous chemicals at job sites, methods of providing SDS sheets, methods of precautionary measures to be taken and methods of providing information on labeling systems:

Multi-Work Sites
Where employees and contractors must travel between workplaces during a work shift (multi job sites), the written program may be kept at a primary job site or in the online support center located at www.iws.support.

Multi-Employer Job Sites
A pre-job briefing shall be conducted with affected parties prior to the initiation of work on the site.

- During this pre-job briefing, Company workers shall discuss the location of the Right to Know center and the SDS library.
- It should be shared that the SDS should be shared via the Chemical Notification Form located in the Forms tab of the support center located at www.iws.support.
- The Integrated Water Services www.iws.support center provides chemical SDS and label information for all hazardous chemicals to the affected employees.
- The facilities labeling system and any precautionary measures required by the customer or client during normal conditions and emergencies shall be addressed.
- By providing access to the Company right to Know center to other employers and employees, the Company does not assume or share the obligations of other employers to share chemical safety data sheets to their employees.

Training

Employees are provided with information and training on the hazardous chemicals they may be exposed to. Employees and contractors shall be provided with effective information and training on hazardous chemicals in their work area at the time of their initial assignment, and whenever a new physical or health hazard the employees have not previously been trained about is introduced into their work area. Information and training may be designed to cover categories of hazards (e.g., flammability, carcinogenicity) or specific chemicals. Chemical-specific information must always be available through labels and safety data sheets.

The Hazard Communication Program documented training shall, as a minimum, include:

- Requirements of the OSHA Hazard Communication Standard 29 CFR 1910.1200 (General Industry) or 29 CFR 1926.59 (Construction Industry).
- Operations in the work area where hazardous chemicals may be present.
- Location and availability of the hazard communication program, chemical inventory list and SDSs.
- Methods and observations used to detect the presence or release of a hazardous chemical in the work area, such as monitoring devices, visual appearance or odor of hazardous chemicals when being released.
- Explanation of the labels received on shipped containers.
- Explanation of the workplace labeling system.
- Explanation of the SDS, including order of information and how employees can obtain and use the appropriate hazard information.

The Manager shall ensure records of employee training are maintained.

HEARING CONSERVATION

Integrated Water Services, Inc.
(the Company)

Purpose

The purpose of this program is to provide a process to minimize employee-hearing loss caused by excessive occupational exposure to noise.

Scope

This program is applicable to all employees and contractors who may be exposed to noise in excess of 85 decibels (decibels) on an 8-hour time weighted average, or where impulsive or when impact or impulse noise reaches 140 dB peak sound pressure level at any time.

When work is performed by a subcontractor on a company site, the contractor's written safety program shall take precedence for their employees. However, subcontractors may adopt this procedure for their use.

Definitions

Audiometric testing: sound detection by the person being tested of a series of pure tones. For each tone, the person indicates the lowest level of intensity that they are able to perceive.

Decibels: the sound energy measured by a sound level meter using the "A" scale. The "A" scale is electronically weighted to simulate the response of the human ear to high and low frequency noise.

Slow Response: the setting on the sound level meter that averages out impulses of brief duration that would cause wide fluctuation in the sound level meter reading.

Standard Threshold Shift: a change in hearing threshold relative to the baseline audiogram of an average of 10 dB (corrected for age) at 2000, 3000 and 4000 Hz in either ear.

Key Responsibilities

Managers and Supervisors

- Ensure requirements of this program are established and maintained.
- Ensure employees are trained and comply with the requirements of this program.

Employees

- Wear hearing protection when required, complete assigned safety training, and cooperate with testing and sampling efforts.

Procedure

Occupational hearing loss is a cumulative result of repeated or continued absorption of sound energy by the ear; employee protection is based on reduction of the noise level at the ear or limiting the employee's exposure time. Integrated Water Services shall offer hearing protection to all employees exposed to potential high noise levels in working areas and to those employees requesting hearing protection.

Hearing Conservation Program
A continuing effective hearing conservation program shall be administered when employees are exposed to sound levels greater than 85 dbA on an 8-hour time-weighted average basis or when impact or impulse noise reaches 140 dB peak sound pressure level at any time.

Employees will wear hearing protection in work areas where it is required by signage.

Monitoring Procedures to be Used When Exposure Limits Exceed the Established Level
When information indicates that employee exposure may equal/exceed the 8 hour time-weighted average of 85 decibels, a monitoring program shall be implemented to identify employees to be included in the hearing conservation program.

Surveys
Surveys will be conducted by a qualified employee or third party.

To evaluate noise exposure in terms of possible hearing damage, it is necessary to know the overall sound level ("A" scale measurement), the exposure time of the individual in hours per day and the length of time the individual has worked in the area being surveyed. This data shall be supplemented by the following:

- Name of area and location
- Date and time of survey
- Name of person conducting survey
- Description of instrument used, model and serial number
- Environmental conditions
- Description of people exposed

Integrated Water Services shall notify each employee if their job is exposed to noise at 85 decibels or greater.

Integrated Water Services shall evaluate hearing protector attenuation for the specific noise environments in which the protector will be used. The adequacy of hearing PPE shall be reevaluated whenever noise exposures increase to the point that the PPE provided may no longer provide adequate protection. Integrated Water Services shall then provide more effective PPE where necessary.

All sound measuring equipment must be calibrated before and after each survey. Records of sound measuring equipment calibration and noise level surveys shall be kept for 20 years.

Noise Surveys must be repeated whenever changes in the workplace may expose additional personnel to high noise or hearing protection being used by employees may not be adequate to reduce the noise exposure to a level below 85 decibels.

Sound Level Surveys

- All facilities that are suspected of having noise levels exceeding 85 decibels for 8 hours on a time-weighted average must be screened.

Exposure Surveys:

- A representative sampling of employees shall be conducted to determine the exposure to noise over a period of time.

- Noise dosimeters must be capable of integrating all continuous, intermittent, and impulsive sound levels from 80 dB to 130 dB and must be calibrated so a dose of 50% corresponds to a time weighted average of 85 dB.

Signage
Clearly worded signs shall be posted at entrances to, or on the periphery of, areas where employees may be exposed to noise levels in excess of 85 decibels. These signs shall describe the hazards involved and the required protective actions.

Audiometric Testing
Integrated Water Services must establish and maintain an audiometric testing program for all employees whose exposures equal or exceed the 8-hour time-weighted average of 85 dbA and making medical surveillance monitoring available to all employees whose exposures were equal to or exceeded an 8-hour time-weighted average of 85 decibels.

Baseline Testing Guidelines

- Integrated Water Services shall establish a baseline audiogram for each exposed employees within 6 months of their first exposure. Within 6 months of an employee's first exposure at or above the action level, a valid baseline audiogram shall be established against which future audiograms can be compared.
- When a mobile van is used the baseline shall be established within one year.
- A qualified third party shall perform all audiometric testing, evaluation, reporting and retesting.
- Prior to establishment of a baseline audiogram at least 14 hours without exposure to workplace noise is observed. Testing to establish a baseline audiogram shall be preceded by at least 14 hours without exposure to workplace noise. Hearing protection may be used to meet the requirement. Employees shall also be notified to avoid high levels of noise.

Annual Testing Guidelines

Integrated Water Services shall provide an annual audiogram and if a standard threshold shift has occurred the employee will be notified in writing within 21 days of determination. At least annually after obtaining the baseline audiogram, Integrated Water Services shall obtain a new audiogram for each employee exposed at or above an 8-hour time-weighted average of 85 decibels. Each employee's annual audiogram shall be compared to that employee's baseline audiogram to determine if the audiogram is valid and if a standard threshold shift has occurred. If a comparison of the annual audiogram to the baseline audiogram indicates a standard threshold shift, the employee shall be informed of this fact in writing, within 21 days of the determination.

Steps That Are Taken When Standard Threshold Shift Occurs

- Hearing protection shall be re-evaluated and/or refitted, and
- If necessary, a medical evaluation may be required, and
- The employee shall be advised to wear hearing protection and if necessary, a reassignment of duties may be deemed appropriate.

Required Recordkeeping
Integrated Water Services shall maintain accurate records of all employee exposure measurements and all records are maintained as required by CFR 1910.95 (Occupational Noise Exposure).

Employee audiograms are considered medical/exposure records. These records must be kept for the length of employment plus 30 years.

Hearing Protection Devices

- Hearing protectors are available to all employees exposed to an 8-hour time-weighted average of 85 decibels at no cost to the employee.
- Hearing protection shall be replaced as necessary.
- Integrated Water Services shall ensure that hearing protectors are worn. Employees shall be properly trained in the use, care and fitting of protectors. This is done at no cost to employees.
- Employees shall be given the opportunity to select their hearing protectors from a variety of suitable hearing protectors provided by Integrated Water Services.

TRAINING

Employees must be provided with training on at least an annual basis and shall be updated to be consistent with changes in the PPE and work processes.

A training program shall be provided for all employees who are exposed to action level noise.

The training shall be repeated annually for each employee. Training shall be updated consistent to changes in PPE and work processes. Integrated Water Services shall make available to affected employees copies of the noise exposure procedures and shall also post a copy in the workplace. Integrated Water Services shall also allow the Assistant Secretary and the Director access to records.

All training must and shall be documented.

All staff shall have ready access to this program via www.iws.support.

HEAT ILLNESS PREVENTION

Integrated Water Services, Inc.
(the Company)

Purpose

This program is designed to reduce the risk of work-related heat illnesses. Integrated Water Services (the company) is committed to taking every precaution to protect employees who might be exposed to heat stress, including establishing safe work practices, heat illness prevention controls, and emergency preparedness, which will be detailed in this plan. IWS complies with local, state, and federal regulations.

Scope

This procedure applies to all company employees exposed to hot environments during the course of their employment duties.

When work is performed by a subcontractor on a company site, the contractor's written safety program shall take precedence for their employees. However, subcontractors may adopt this procedure for their use.

Definitions

Acclimatization: means temporary adaptation of the body to work in the heat that occurs gradually when a person is exposed to it. Acclimatization peaks in most people within four to fourteen days of regular work for at least two hours per day in the heat.

Heat Illness: means a serious medical condition resulting from the body's inability to cope with a particular heat load, and includes heat cramps, heat exhaustion, heat syncope and heat stroke.

Heat Stress: stress on the body due to high temperatures or exertion, which can lead to heat illness if unchecked.

Preventative Recovery Period: means a period of time to recover from the heat in order to prevent heat illness.

Shade: means blockage of direct sunlight. Canopies, umbrellas and other temporary structures or devices may be used to provide shade. One indicator that blockage is sufficient is when objects do not cast a shadow in the area of blocked sunlight. Shade is not adequate when heat in the area of shade defeats the purpose of shade, which is to allow the body to cool.

Procedures

All managers and supervisors are responsible for implementing and maintaining the Heat Illness Program in their work areas.

Provision of Water

Employees shall have access to potable drinking water. Where it is not plumbed or otherwise continuously supplied, it shall be provided in sufficient quantity at the beginning of the work shift.

Access to Shade

Employees will be provided access to shade as well as sufficient rest periods that will provide adequate cooling of the body during the hot periods of their shift. Elements of shade will include but not be limited to cooling rooms or tents, trailer/s on site, vehicles, etc. Employees suffering from heat illness or believing a

preventative recovery period is needed shall be provided access to an area with shade that is either open to the air or provided with ventilation or cooling. Such access to shade shall be permitted at all times.

Control Measures
Each work location involved in working in hot environments where the heat index will rise above 90°F shall implement measures to control the effects of environmental factors that can contribute to heat related illness. The most common environmental factors are air temperature, humidity, radiant heat sources and air circulation.

Physical factors that can contribute to heat related illness shall be taken into consideration before performing a task. The most common physical factors that can contribute to heat related illness are the type of work, level of physical activity and duration, and clothing color, weight and breathability.

Supervisors must ensure personal factors that contribute to heat related illness are taken into consideration before assigning a task where there is the possibility of a heat-related illness occurring. The most common personal factors that can contribute to heat related illness are age, weight/fitness, drug/alcohol use, prior heat-related illness, etc.

Each work site shall develop site specific procedures that include the minimum elements:

- Bring at least 2 quarts per employee at the start of the shift, and employees are encouraged to report to supervisor when water supply gets low.
- Supervisors will provide frequent reminders to employees to drink frequently.
- Every morning there will be short tailgate meetings to remind workers about the importance of frequent consumption of water throughout the shift during hot weather.
- Place water containers as close as possible to the workers.
- Water levels should not fall below the point that will allow for adequate water during the time necessary to effect replenishment.
- Working hours will be modified to work during the cooler hours of the day, when possible.
- When a modified or shorter work-shift is not possible, more water and rest breaks will be provided.
- Supervisors will continuously check all employees and stay alert to the presence of heat related symptoms.
- Supervisors will carry cell phones or other means of communication, to ensure that emergency services can be called and check that these are functional at the worksite prior to each shift.
- On occasion, workers will be reminded about the directions tab on the support center, so the emergency responders have a readily accessible means for accessing the project site. The Emergency Action Plans are available at www.iws.support in the “Emergencies” tab.

Risk Factors

Personal Risk Factors

Personal risk factors for heat illness include;

- General Health & Age: Those at greatest risk for heat-related illness include people > 65 years old, overweight, ill or taking certain medications. Additional risk factors include; fever, dehydration, heart disease, mental illness, poor circulation, and sunburn.
- Acclimatization: the temporary adaptation of the body to work in the heat that occurs gradually with exposure to ambient heat. The body needs time to adapt to working in the heat. When temperatures rise suddenly, an employee is at increased risk for heat illness while their body acclimatizes to the heat. Acclimatization is particularly important for employees who are returning to work after a prolonged absence, recent illness, or recently moving from a cool to hot climate. For heavy work under very hot conditions, a period of 4-10 days of progressively increasing work time is recommended. For less severe conditions, 2-3 days of increasing work activity and duration are recommended (for guidance, see Attachment A).
- Alcohol & Caffeine: Alcoholic beverages, coffee, tea or other drinks containing caffeine will dehydrate the body and increase the risk of heat illnesses.

Environmental Risk Factors

Environmental risk factors for heat illness are defined in regulation as “working conditions that create the possibility that heat illness could occur, including air temperature, relative humidity, radiant heat from the sun, and other sources, conductive heat sources such as the ground, air movement, workload severity and duration, protective clothing and personal protective equipment worn by employees.”

The Heat Index (HI) is the temperature the body feels when heat and humidity are combined. The chart below shows the HI that corresponds to the actual air temperature and relative humidity. This chart is based upon shady, light wind conditions. Exposure to direct sunlight can increase the HI by up to 15°F. This table can be used in consideration of the risk factors and the subsequent need for water, rest and shade. Regardless of the actual ambient temperature, provision of water and shade as described above should be implemented whenever the Heat Index exceeds 90°F.

INTEGRATED WATER SERVICES

NWS Heat Index — Temperature (°F)

Relative Humidity (%)	80	82	84	86	88	90	92	94	96	98	100	102	104	106	108	110
40	80	81	83	85	88	91	94	97	101	105	109	114	119	124	130	136
45	80	82	84	87	89	93	96	100	104	109	114	119	124	130	137	
50	81	83	85	88	91	95	99	103	108	113	118	124	131	137		
55	81	84	86	89	93	97	101	106	112	117	124	130	137			
60	82	84	88	91	95	100	105	110	116	123	129	137				
65	82	85	89	93	98	103	108	114	121	128	136					
70	83	86	90	95	100	105	112	119	126	134						
75	84	88	92	97	103	109	116	124	132							
80	84	89	94	100	106	113	121	129								
85	85	90	96	102	110	117	126	135								
90	86	91	98	105	113	122	131									
95	86	93	100	108	117	127										
100	87	95	103	112	121	132										

Likelihood of Heat Disorders with Prolonged Exposure or Strenuous Activity

Caution — Extreme Caution — Danger — Extreme Danger

Heat Illness Detection and Response

Heat cramps

This affects employees who have perspired so heavily that they have depleted the body's water and salt.

Symptoms:

- Muscle cramps
- Pain or spasms in the abdomen, arms, or legs

First aid:

The following first aid measures should be provided:

- Sit and rest in a cool place.
- Drink sports drinks, juice, or water combined with food.
- After recovery, do not begin strenuous work again for several hours.
- Seek medical help if you have heart problems, are on a low-sodium diet, or if you don't feel better after one hour.

Heat exhaustion

This is the body's response to not being able to cool itself efficiently due to dehydration. Without prompt treatment, this condition can lead to heat stroke.

Symptoms:

- Rapid, weak pulse
- Headache
- Heavy sweating
- Extreme weakness
- Dizziness or fainting
- Irritability
- Nausea or vomiting
- Cold, pale, clammy skin

First aid:

The following first aid measures should be provided:

- Sit and rest in a cool place.
- Drink small amounts of cool water.
- Take a cool shower or bath or apply ice packs.
- Monitor the victim carefully. If they do not improve within 30 minutes, get medical help.
- Confusion, vomiting, or fainting may indicate a more serious condition. Seek medical attention immediately in this case.

Heat stroke

This condition occurs when the body is unable to control its temperature as a result of prolonged exposure or physical exertion in high temperatures. Untreated, it can quickly cause death or disability.

Symptoms:

- High body temperature
- Strong, rapid pulse
- Confusion
- Loss of coordination
- Hot, red, dry or moist skin
- Nausea and vomiting
- Seizure or unconsciousness

First aid:

The following first aid measures should be provided:

- Contact emergency medical services immediately.
- Move the victim to a cool, shaded area.
- Remove any excess clothing.
- Cool the victim's body as quickly as possible, using ice or cold water.

- If the victim is able to drink, give him or her cool fluids.

Emergency Response Procedures

- If an employee shows signs of heat illness, they will be monitored and shall not be left alone or sent home without being offered first aid or emergency medical services.
- If an employee reports symptoms of heat illness or if a supervisor or coworker sees evidence of the symptoms, the supervisor will take immediate action appropriate to the symptoms.
- If symptoms indicate severe heat illness, the employer will provide prompt medical attention according to the Emergency Action Plan.

Work Duration for New Workers

New workers need time to acclimatize unless they have previously worked in hot environments. To prevent heat-related illnesses, they should work shorter workdays in the heat during their first 1-2 weeks. OSHA and NIOSH recommend the "Rule of 20 *percent*" for building heat tolerance:

- *20 percent First Day*: New workers should work only 20 *percent* of the normal duration on their first day.
- *20 percent Each Additional Day*: Increase work duration by 20 *percent* on subsequent days until the worker is performing a normal schedule.

For example, if the normal workday lasts 8 hours, then new workers should work no more than 1 hour and 40 minutes (20 *percent* of 8 hours) on their first day in the heat. They can spend the rest of the workday without heat stress. They should be given at least one rest break during the period when they are working.

By following the Rule of 20 *Percent*, new workers will be working a full schedule by the end of their first week. The Rule of 20 *Percent* should protect most workers who are physically fit and have no medical problems. Other workers may require more time to adapt to heat – up to 14 days in some cases. When in doubt, give workers more days to acclimatize. As the duration of work increases, workers will need more rest breaks to recover from the heat load.

To become acclimatized to heat, workers should perform job tasks that are similar in intensity to their expected work. For example, if a new worker has been hired to lay bricks outdoors in hot weather, then he should lay bricks during his first week. Doing light work may not acclimatize a worker to the demands of their job.

Remember, to help workers build heat tolerance, reduce the duration of the work but not the intensity of the work.

Training

Training in the following topics shall be provided to all employees:

- The environmental and personal risk factors for heat illness.
- The importance of frequent consumption of small quantities of water, up to 4 cups per hour, when the work environment is hot, and employees are likely to be sweating more than usual in the performance of their duties.

- The importance of acclimatization.
- The different types of heat illness and the common signs and symptoms of heat illness.
- The importance to employees of immediately reporting to the employer, directly or through the employee's supervisor, symptoms or signs of heat illness in themselves, or in co-workers.
- Integrated Water Services procedures for responding to symptoms of possible heat illness, including how emergency medical services will be accessed should they become necessary.
- Integrated Water Services procedures for ensuring that, in the event of an emergency, clear and precise directions to the work site can and will be provided as needed to emergency responders.

Supervisors must receive training in the prevention of heat related illnesses prior to supervising employees working in the heat.

HIERARCHY OF CONTROLS

Integrated Water Services, Inc.
(the Company)

Purpose

The purpose of this program is to establish the requirements for applying the Hierarchy of Controls in hazard identification and mitigation to ensure the safety and health of employees. This procedure outlines the step-by-step priority order for eliminating or controlling workplace hazards, in accordance with OSHA guidance.

Scope

This policy applies to all work activities conducted on Integrated Water Services (IWS) property or performed by IWS employees, including construction, operations, and maintenance activities. When work is performed by a subcontractor on a company site, the contractor's written safety program shall take precedence for their employees. However, subcontractors may adopt this procedure for their use.

Key Responsibilities

Supervisors

- Shall ensure the Hierarchy of Controls is applied to all hazard assessments and job planning activities.
- Shall verify that hazard controls selected follow the priority sequence outlined in this procedure, starting with elimination and ending with personal protective equipment (PPE).
- Shall document control measures in Job Hazard Analyses (JHAs), Safe Work Permits, or other required safety documentation.

Employees

- Shall follow all aspects of this program and actively participate in hazard identification and control selection.
- Shall promptly report hazards to their supervisor and suggest higher-level control measures where feasible.

Procedure

The Hierarchy of Controls shall be applied in the following priority order:

1. **Elimination**
   - Physically remove the hazard from the workplace.
   - Examples: Remove defective equipment from service, eliminate the need to work at heights by relocating work to the ground, design out confined space requirements.
2. **Substitution**
   - Replace the hazard with a less hazardous process, material, or equipment.
   - Examples: Use less toxic chemicals, swap noisy equipment with quieter alternatives, replace sharp-edged tools with safer designs.
3. **Engineering Controls**
   - Isolate people from the hazard using physical means.
   - Examples: Guardrails, machine guards, ventilation systems, soundproof enclosures, interlocks.
4. **Administrative Controls**
   - Change the way work is performed to reduce exposure to hazards.

- Examples: Rotating job assignments, implementing safe work procedures, posting warning signs, providing safety training, limiting time in high-exposure areas.

5. **Personal Protective Equipment (PPE)**
    - Provide and require the use of protective equipment when hazards cannot be eliminated or controlled by other means.
    - Examples: Hard hats, safety glasses, respirators, gloves, high-visibility vests, fall protection harnesses.

General Requirements

- Higher-level controls (Elimination, Substitution, Engineering) must be considered and implemented before relying on lower-level controls (Administrative, PPE).
- Where multiple hazards are present, the Hierarchy of Controls must be applied to each hazard individually.
- Controls must be periodically reviewed for effectiveness and adjusted as necessary.
- All employees shall be trained in the principles and application of the Hierarchy of Controls. Training must conform to all applicable OSHA requirements.

HOT WORK

Integrated Water Services, Inc.
(the Company)

Purpose

The purpose of this program is to ensure a safe work environment during welding, cutting and hot work operations.

Scope

This program is applicable to all employees directly involved or assisting in the welding, cutting, and hot work operations.

When work is performed by a subcontractor on a company site, the contractor's written safety program shall take precedence for their employees. However, subcontractors may adopt this procedure for their use.

Definitions

Welding/Hot Work Procedures: any activity which results in sparks, fire, molten slag, or hot material which has the potential to cause fires or explosions.

Examples of Hot Work: Cutting, Brazing, Soldering, Thawing Pipes, Grinding, using an electric tool in a hazardous area and Welding.

Special Hazard Occupancies: any area containing Flammable Liquids, Dust Accumulation, Gases, Plastics, Rubber and Paper Products.

Hazards: includes, but not limited to the following: fires and explosions, skin burns, welding blindness, and respiratory hazards from fumes and smoke.

Key Responsibilities

Managers and Supervisors

- Determine if its property is safe for welding and cutting operations.
- Establish safe areas for welding and cutting operations.
- Provide training for all employees whose task includes heat, spark or flame producing operations such as welding, brazing, or grinding.
- Develop and monitor effective hot work procedures.
- Provide safe equipment for hot work.
- Provide proper and effective PPE for all hot work.
- Monitor all hot work operations.
- Ensure all hot work equipment and PPE are in safe working order.
- Allow only trained and authorized employees to conduct hot work and conduct inspections of the hot work area before operations begin.
- Ensure permits are used for all hot work outside authorized areas.

Employees

- Follow all hot work procedures.
- Properly use appropriate hot work PPE.
- Inspect all hot work equipment before use.
- Report any equipment problems or unsafe conditions.

Procedure

General

A hot work permit must be completed before performing hot work. Precautions that are to be taken shall be in the form of a written permit. Before cutting or welding is permitted the area shall be inspected and a written permit shall be used to authorize welding and cutting operations. The Hot Work Permit can be found at: www.iws.support/permits.

Where practicable all combustibles shall be relocated at least 35 feet from the work site. Where relocation is impractical, combustibles shall be protected with flameproof covers, shielded with metal, guards, curtains, or wet down the material to help prevent ignition of material.

Ducts, conveyor systems, and augers that might carry sparks to distant combustibles shall be protected or shut down.

Where cutting or welding is done near walls, partitions, ceilings, or openings in the floor (grating, manholes, etc.), fire-resistant shields or guards shall be provided to prevent ignition.

If welding is to be done on a metal wall, partition, ceiling, or solid decking/flooring, precautions shall be taken to prevent ignition of combustibles on the other side, due to conduction or radiation of heat. Where combustibles cannot be relocated on the opposite side of the work, a fire watch person shall be provided on the opposite side of the work.

Welding shall not be attempted on a metal partition, wall, and ceiling or decking/flooring constructed of combustible sandwich panels.

Cutting or welding on pipes or other metal in contact with combustible walls, partitions, floors, ceilings, or roofs shall not be undertaken if the work is close enough to cause ignition by combustion.

Cutting or welding shall not be permitted in the following situations:

- In areas not authorized by management.
- In sprinkled buildings while such protection is impaired.
- In the presence of potentially explosive atmospheres, e.g., flammables.
- In areas near the storage of large quantities of exposed, readily ignitable materials.
- In areas where there is dust accumulation of greater than 1/16 inch within 35 feet of the area where welding/hot work will be conducted.
- All dust accumulation shall be cleaned up before welding or hot work is permitted.

Whenever welding or cutting is performed in locations where other than a minor fire might develop or any of the conditions mentioned above cannot be met, a fire watch shall be provided.

- The fire watch shall be provided during and for a minimum of 1/2 hour past the completion of the welding project.
- The fire watch shall be trained in the use of fire extinguishers and the facility's alarm system.

- During this time the fire watch will have appropriate fire extinguishers readily available.
- Suitable extinguishers shall be provided and maintained ready for instant use.
- A hot-work permit will be issued on all welding or cutting outside of the designated welding area.

Fire Prevention Measures
A designated welding area shall be established to meet the following requirements:

- Floors swept and cleaned of combustibles within 35 feet of work area.
- Flammable and combustible liquids and material will be kept 35 feet from work area.
- Adequate ventilation providing 20 air changes per hour.
- At least one 25-pound dry chemical fire extinguisher shall be within access of 35 feet of the work area.
- Protective dividers such as welding curtains or noncombustible walls will be provided to contain sparks and slag to the combustible free area.

Requirements for welding conducted outside the designated welding area:

- Portable welding curtains or shields must be used to protect other workers in the welding area.
- A hot-work permit must be completed and complied with prior to initiating welding operations.
- Respiratory protection is mandatory unless an adequate monitored airflow away from the welder and others present can be established and maintained.
- Plastic materials must be covered with welding tarps during welding procedures.
- Fire Watch must be provided for all hot-work operations.

After welding operations are completed, the welder shall mark the hot metal or provide some other means of warning other workers.

Confined Space
- A space that Is large enough and so configured that an employee can bodily enter and perform assigned work.
- Has limited or restricted means for entry or exit (for example, tanks, vessels, coolers, storage bins, hoppers, vaults, and pits are spaces that may have limited means of entry), and
- Is not designed for continuous occupancy.

Refer to Integrated Water Services Confined Space Program before commencing any welding, cutting, and/or brazing operations in an area meeting the requirements of a confined space.

Ventilation is a prerequisite to work in confined spaces.

When welding or cutting is being performed in any confined spaces, the gas cylinders and welding machines shall be left on the outside. Before operations are started, heavy portable equipment mounted on wheels shall be securely blocked to prevent accidental movement.

When a welder must enter a confined space through a manhole or other small opening, means shall be provided for quickly removing him in case of an emergency.

- When safety belts and lifelines are used for this purpose, they shall be so attached to the welder's body that it cannot be jammed in a small exit opening.

- An attendant with a preplanned rescue procedure shall be stationed outside to observe the welder at all times and be capable of putting rescue operations into effect.

When arc welding is to be suspended for any substantial period of time, such as during lunch or overnight, all electrodes shall be removed from the holders and the holders carefully located so that accidental contact cannot occur, and the machine shall be disconnected from the power source.

In order to eliminate the possibility of gas escaping through leaks of improperly closed valves, when gas welding or cuffing, the torch valves shall be closed and the fuel-gas and oxygen supply to the torch positively shut off at some point outside the confined area whenever the torch is not to be used for a substantial period of time, such as during lunch hour or overnight. If practical, the torch and hose shall also be removed from the confined space.

When welding must be performed in a space entirely screened on all sides, the screens shall be so arranged that no serious restriction of ventilation exists. It is desirable to have the screens so mounted that they are about 2 feet (0.61 m) above the floor unless the work is performed at so low a level that the screen must be extended nearer to the floor to protect nearby workers from the glare of welding.

A fixed enclosure shall have a top and not less than two sides which surround the welding or cutting operations, and a rate of airflow sufficient to maintain a velocity away from the welder of not less than 100 linear feet (30 m) per minute.

All welding and cutting operations carried on in confined spaces shall be adequately ventilated to prevent the accumulation of toxic materials or possible oxygen deficiency. This applies not only to the welder, but also to helpers and other personnel in the immediate vicinity. All air withdrawn will be replaced with air that is clean.

In circumstances for which it is impossible to provide such ventilation, airline respirators or hose masks approved for this purpose by the National Institute for Occupational Safety and Health (NIOSH) will be provided. In areas immediately hazardous to life, a full-face piece, positive pressure, self-contained breathing apparatus or a combination full-face piece, positive pressure supplied-air respirator with an auxiliary, self-contained air supply approved by NIOSH must be used.

Where welding operations are carried on in confined spaces and where welders and helpers are provided with hose masks, hose masks with blowers or self-contained breathing equipment, a worker shall be stationed on the outside of such confined spaces to ensure the safety of those working within.

Fumes, Gases and Dust

Fumes produced by some welding processes can be toxic and may require source extraction. An assessment of the work to be performed must be completed before each job is undertaken. Fumes generally contain particles from the material being welded. Welding fumes can have an acute effect on the respiratory system.

Any welding, cutting or burning of lead base metals, zinc, cadmium, mercury, fluorides, beryllium or exotic metals or paints not listed here that could produce dangerous fumes shall have proper ventilation or respiratory protection. This includes inert-gas metal-arc welding or oxygen cutting of stainless steel.

Welders and helpers will refer to Integrated Water Services Respiratory Protection Program to determine the appropriate respiratory protection to be used during welding operations.

All welding and cutting operations shall be adequately ventilated to prevent the accumulation of toxic materials. This applies not only to the welder, but also to helpers and other personnel in the immediate vicinity.

Personal Protection

Helmets and hand shields shall be made of a material that is an insulator to heat and electricity. Helmets, shields, and goggles shall not be readily flammable and shall be capable of withstanding sterilization.

- Helmets and hand shields shall be arranged to protect the face, neck and ears from direct radiant energy from the arc.
- Helmets shall be provided with filter plates and cover plates designed for easy removal.
- All parts shall be constructed of a material, which will not readily corrode or discolor the skin.
- Goggles shall be ventilated to prevent fogging of the lenses as much as practicable.
- All glass for lenses shall be tempered, substantially free from scratches, air bubbles, waves and other flaws. Except when a lens is ground to provide proper optical vision correction, the front and rear surfaces of lenses and windows shall be smooth and parallel.
- Lenses shall bear some permanent distinctive marking which may readily identify the source and shade.

The following is a guide for the selection of the proper shade numbers. These recommendations may be varied to suit the individual's needs:

Welding Operation		Shade Number
Shielded metal — arc welding 1/16, 3/32, 1/8-5/32-inch electrodes		10
Gas-shielded arc welding (nonferrous) 1/16, 3/32, 5/32 inch electrodes		11
Gas-shielded arc welding (ferrous) 1/16, 3/32, 1/8, 5/32 electrodes		12
Shielded metal arc welding: 3/16	7/32,1/4-inch electrodes	12
	5/16, 3/8-inch electrodes	14
Atomic hydrogen welding		10 – 14
Carbon arc welding		14
Soldering		2
Torch brazing		3 or 4
Light cutting, hp to 1 inch		3 or 4
Medium cutting, 1 inch to 6 inches		4 or 5
Healy cutting, 6 inches or over		5 or 6
Gas welding (light) up to 1/8 inch		4 or 5
Gas welding (medium) 1/8 - 1/2 inch		5 or 6
Gas welding (heavy) 1/2 inch or over		6 or 8

NOTE:

In gas welding or oxygen cutting where the torch produces a high yellow light, it is desirable to use a filter or lens that absorbs the yellow or sodium line in the visible light of the operation. All filter lenses and plates shall meet the test for transmission of radiant energy prescribed in ANSI Z87.1 — 1968 — American National Standard Practice for Occupational and Educational Eye and face Protection. Where the work permits the welder to be enclosed in an individual booth painted with a finish of low reflectivity such as zinc oxide (an important factor for absorbing ultraviolet radiation) and lamp black or shall be enclosed with noncombustible screens similarly painted. Booths and screens shall permit circulation of air at floor level. Workers or other persons adjacent to the welding areas

shall be protected from the rays by noncombustible or flameproof screens or shields or shall be required to wear appropriate goggles.

Adequate hand protection and clothing must be used to protect the body from welding hazards.

Cleaning Compounds
In the use of cleaning materials, because of their possible toxicity or flammability, appropriate precautions such as manufacturer instructions shall be followed.

- Degreasing and other cleaning operations involving chlorinated hydrocarbons shall be so located that no vapors from these operations will reach or be drawn into the atmosphere surrounding any welding operation.
- In addition, trichloroethylene and perchloroethylene shall be kept out of atmospheres penetrated by the ultraviolet radiation of gas-shielded welding operations.

Oxygen cutting, using a chemical flux, iron powder or gas shielded arc cutting for stainless steel shall be performed using mechanical ventilation adequate to remove the fumes generated.

Cylinders
Compressed gas cylinders shall be DOT-approved and legibly marked near the shoulder of the cylinder for the purpose of identifying the gas content with either the chemical or trade name of the gas.

- All compressed gas cylinder connections must comply with ANSI B57. 1-1965 Standards.
- Compressed gas cylinders shall be secured in an upright position at all times except, if necessary, for short periods of time while cylinders are actually being hoisted or carried.

All cylinders shall be kept away from sources of heat and from radiators and piping systems that may be used for grounding purposes. Cylinders and cylinder valves including couplings and regulators shall be kept free from oily or greasy substances and must not be handled with gloves or rags in the same condition.

Stored oxygen cylinders shall be kept at least 20 feet from the fuel gas cylinders or combustible materials, especially oil or grease, or separated by a non-combustible barrier at least 5 feet high with a fire rating of at least one-half hour. All empty cylinders shall have closed valves. Valve protection caps shall always be in place and hand-tight except when cylinders are in use or connected for use.

Cylinders shall not be kept in unventilated enclosures such as lockers and cupboards.

Fuel gas cylinders stored inside buildings shall be limited to a total capacity of 2000 cubic feet (300 pounds) of liquefied petroleum gas, except for those in actual use or attached ready for use.

All acetylene cylinders shall be stored valve-end up.

Assigned storage spaces shall be located where cylinders cannot be knocked over or damaged by falling objects or subject to tampering by unauthorized persons.

- Back flow protection shall be provided by an approved device that will prevent oxygen from flowing into the fuel-gas system or fuel from flowing into the oxygen system.
- An approved device that will prevent flame from passing into the fuel-gas system shall provide flashback protection.

- An approved pressure-relief device set at the appropriate pressure shall provide backpressure protection.

Special care must be taken when transporting gas cylinders:

- Cylinders must be secured with valve cap installed.
- Cylinders shall not be lifted by the valve protection caps, the regulators must be removed, and cylinders shall not be dropped or permitted to strike each other.
- Removed regulators must be carried in the cab of the vehicle.
- Cylinders shall not be tampered with, nor should any attempt be made to repair them.
- They shall be handled carefully - rough handling, knocks, or falls are liable to damage the cylinder, valve or safety device and cause leakage.

Safety devices shall not be tampered with.

Arc Welding and Cutting
All personnel operating, installing, and maintaining welding equipment shall be qualified or trained to operate and maintain such equipment.

- All workmen assigned to operate or maintain equipment shall be familiar with and electrical welding equipment shall be chosen for safe operation and comply with applicable Requirements for Electric Arc Welding Standards to include: 29 CFR 1910.254, 29 CFR 1910.252 (a)(b) (c) and if gas shielded arc welding is done the must be familiar with the American Welding Society Standard A6-1-1966.
    - Arc welding equipment must be designed to meet conditions such as exposure to corrosive fumes, excessive humidity, excessive oil vapor, flammable gasses, abnormal vibration or shock, excessive dust and seacoast or shipboard conditions.
    - It shall be operated at recommended voltage in accordance with the manufacturer recommendations.
    - All leads shall be periodically inspected and replaced if insulation is broken, or splices are unprotected.
    - Leads shall not be repaired with electrical tape.
- All ground connections shall be checked to determine that they are mechanically strong and electrically adequate for the required current.

A disconnecting switch or controller shall be provided at or near each welding machine along with over current protection.

All direct current machines shall be connected with the same polarity and all alternating current machines connected to the same phase of the supply circuit and with the same polarity.

- To prevent electrical contact with personnel, all electrode holders shall be placed where they do not make contact with persons, conducting objects or the fuel of compressed gas tanks.
- All cables with splices within 10 feet of the holder shall not be used.

If the object to be welded or cut cannot readily be moved, all moveable fire hazards should be removed.

If an object to be welded or cut cannot be moved and if all the fire hazards cannot be removed, then guards shall be used to confine the heat sparks and slag and to protect the immovable fire hazards.

Resistance Welding
All personnel operating, installing, and maintaining welding equipment shall be qualified or trained to operate and maintain such equipment.

- Voltage, interlocks, guarding, grounding, and shields shall be in accordance with manufacturer recommendations.
- Precautions such as flash guarding, ventilation and shields shall be provided to control flashes, toxic elements, and metal fumes.

If the object to be welded or cut cannot readily be moved, all moveable fire hazards should be removed.

Pipeline Welding
When arc welding is performed in wet conditions, or under conditions of high humidity, special protection against electric shock shall be supplied.

Pressure testing:

- In pressure testing of pipelines, the workers and the public shall be protected against injury by the blowing out of closures or other pressure restraining devices.
- Protection shall be provided against expulsion of loose dirt that may have become trapped in the pipe.

The welded construction of pipelines shall be conducted in accordance with the Standard for Welding Pipelines and Related Facilities, API Std. 1104-1998.

Oxygen Fuel Gas Welding and Cutting:
Only approved apparatuses such as torches, regulators, or pressure-reducing valves, setting generators and manifolds shall be used:

- Mixtures of fuel gases and air or oxygen may be explosive and must be guarded against.
- All hoses and hose connections shall comply with the Compressed Gas Association and Rubber Manufacturers' Associations' applicable standards.
- Workers in charge of the oxygen or fuel-gas supply equipment, including generators, shall be instructed and judged competent by the Integrated Water Services before being left in charge.

If the object to be welded or cut cannot readily be moved, all moveable fire hazards should be removed.

Fire Watch Requirements
A fire watch shall be under these conditions as a minimum and when welding, cutting, brazing and/or soldering is performed near combustible materials and/or locations where fire may develop:

- Locations where other than a minor fire might develop.
- Combustible materials are closer than 35 feet to the point of operation.
- Combustibles that are 35 feet or more away but are easily ignited.
- Wall or floor openings within a 35 feet radius of exposed combustible materials.
- Combustible materials are adjacent to the opposite side of metal partitions, ceilings or roofs.

Fire watch personnel shall be maintained at least a half an hour after welding or cutting operations have been completed and fire watchers shall have fire extinguishers readily available.

First Aid Equipment

First aid equipment shall be available at all times. All injuries shall be reported as soon as possible for medical attention. First aid shall be rendered until medical attention can be provided.

Training

Training shall include:

- Position Responsibilities
- Cutters, welders, and their supervisors must be suitably trained in the safe operations of their equipment.
- Fire Watch Responsibilities - specifically, the fire watch must know:
    - That their ONLY duty is Fire Watch.
    - When they can terminate the watch.
    - How to use the provided fire extinguisher(s).
    - Be familiar with facilities and how to activate fire alarm if fire is beyond the incipient stage.
    - Operator Responsibilities
    - Contractor Responsibilities
    - Documentation requirements
    - Respirator Usage requirements
    - Fire Extinguisher training.

HYDROGEN SULFIDE H_2S

Integrated Water Services, Inc.
(the Company)

Purpose

The purpose of this program is to establish minimum requirements for site specific H2S safety, which will enhance safety in the occupational setting where hydrogen sulfide is present or is recognized as being potentially present.

Scope

This program applies to all employees and temporary employees of Integrated Water Services.

When work is performed by a subcontractor on a company site, the contractor's written safety program shall take precedence for their employees. However, subcontractors may adopt this procedure for their use.

Definitions

- **Contingency Plan:** a site-specific written document that provides an organized plan for alerting and protecting the public within an area of exposure following the accidental release of all potentially hazardous atmospheric concentrations of hydrogen sulfide.
- **Exposure Level:** permissible exposure level of hydrogen sulfide is 10 PPM for an 8-hour, time weighted average.
- **Gas Detector Instrument:** An instrument/detector to measure levels of H2S. Instruments may be electronically or manually operated.
- **Hydrogen Sulfide (H2S):** is an extremely deadly, toxic gas that in its pure state is colorless and is heavier than air. Additionally:
    - It is the second most toxic gas known to man, ranking behind hydrogen cyanide and ahead of carbon monoxide.
    - It has the odor of rotten eggs at low concentrations.
    - In higher concentrations rapidly paralyze the olfactory nerves (sense of smell).
    - Is soluble in water and is flammable and poses a definite threat of explosion.
- **Parts Per Million (PPM):** parts of vapor or gas per million parts of contaminated air by volume.
- **Personal H2S Monitor:** An electronic instrument worn on the person that is set to alarm at 10 PPM of H2S.
- **Possible Locations of Where May Be Exposed to H2S During Their Job Functions:** While clients are required to notify Integrated Water Services of known H2S locations the majority of time H2S can be located in drilling operations, recycled drilling mud, blowouts, water from sour crude wells, blowouts, tank gauging (tanks at producing, pipeline and refining operations), during routine field maintenance involving hydrocarbons, tank batteries and wells.
- **Venting:** the process of discharging a material to the atmosphere through a series piping and/or venting devices, to facilitate the proper and safe dispersion of toxic materials and to minimize personnel exposure.

Key Responsibilities

Managers and Supervisors

- Shall ensure all employees who are to be assigned to work at locations where hydrogen sulfide is known to be present or suspected to be present in any concentration have been trained in hydrogen sulfide safety.
- Shall ensure employees have been medically approved to wear respirators and trained on the safe use of respirators and receive a respirator fit test in accordance with Integrated Water Services Respiratory Protection Program.
- Shall ensure employees have been trained and familiar with personal H2S monitors and gas detection instruments.

Employees

- Employees are responsible for complying with this program.

Procedure

Characteristics of Hydrogen Sulfide

The characteristics of hydrogen sulfide include: toxic gas, colorless, odor or rotten eggs at very low concentrations, is soluble in water and is flammable:

- Toxicity – See table below. Hydrogen sulfide is a very dangerous and deadly gas - it is colorless and heavier than air. It can accumulate in low places and in small concentrations. Exposure to certain concentrations of H2S can cause serious injury or death.
- Color - H2S is colorless – you can't see it.
- Odor – it has a strong, pungent, somewhat distasteful odor similar to rotten eggs. In higher concentrations, it can deaden the sense of smell (olfactory nerve). Do Not Rely On Smell To Detect H2s – Rely Strictly On Instruments Designed To Measure Concentrations Of H2S.
- Solubility – H2S mixes with water.
- Flammability – H2S is an explosive gas.
- Toxic By Products – H2S presence can create sulfur dioxide which can ignite without warning

Toxic Effects of Hydrogen Sulfide

CONCENTRATION	PHYSICAL EFFECT
.01 PPM	Can smell odor.
10 PPM	Obvious and unpleasant odor. Beginning eye irritation. ANSI permissible exposure level for 8 hours (enforced by OSHA).
100 PPM	Immediately Dangerous to life or Health (IDLH) Kills smell in 3-15 minutes; may sting eyes and throat. May cause coughing and drowsiness. Possible delayed death within 48 hours.
200 PPM	Kills smell shortly, stings eyes and throat. Respiratory irritation. Death after 1-2 hours exposure.
500 PPM	Dizziness; breathing ceases in a few minutes. Need prompt rescue

	breathing (CPR). Self-rescue impossible because of loss of muscle control.
700 PPM	Unconscious quickly; death will result if not rescued promptly. 1000 PPM Unconscious at once, followed by death within minutes.

Health Effect of Exposure to Hydrogen Sulfide
Some basic health effects of H2s can include eye irritations, effects nerve centers of the brain which control breathing, will paralyze the olfactory nerves, will cause death at relatively low concentrations.

General Requirements
Integrated Water Services has a written confined space program per 29 CFR 1910.146 and employees must be aware of site-specific contingency/emergency plans.

Each person entering a H2S designated location, regardless of the concentration, shall wear a personal H2S monitor that is set to alarm at 10 PPM and shall carry a 5-minute escape pack with them at all times. When the alarms sound the employees must either evacuate the area or don the escape pack and then evacuate the area.

When work requires opening any equipment on location that has the potential of releasing concentrations of H2S at 100 PPM or higher, two or more H2S trained persons shall be present and follow these procedures prior to and during the opening of the equipment:

- Each person entering the H2S location shall don a personal H2S monitor prior to entry.
- A tailgate meeting will be held with everyone on location to discuss the work plan, the responsibilities of each person and the site-specific emergency action plan.
- Each person shall have either a self-contained breathing apparatus (SCBA) or a supplied airline respirator equipped with a 5-minute escape pack and shall be worn when opening the equipment to the surrounding atmosphere.
- At least one person (per two workers), equipped with a SCBA will act as a stand-by person and may not participate in the work being performed until the atmosphere has been tested and found to have no H2S present in quantities over 10 PPM. The stand-by person shall be stationed up wind, within 100 feet and in clear view of the workers.
- If an operator or other third party provides the stand-by person, it will be the responsibility of the Integrated Water Services supervisor in charge to verify that the person has been H2S, CPR, and First Aid trained, and that they have been provided the proper respiratory equipment.
    - Only Integrated Water Services employees may wear Integrated Water Services respiratory protection equipment.
    - If Integrated Water Services employees use client or other third party equipment, the equipment must be inspected to ensure it is safe for use and meets Integrated Water Services requirements.
- After the equipment has been locked and tagged out (per Integrated Water Services Lockout/Tagout Program), opened, and the H2S concentration has been cleared to less than 10 PPM, the stand-by person will no longer be required. Work may then be performed without respiratory equipment, except for the required 5-minute escape pack.

Safe Work Procedures
- Maintain compliance with permit requirements of Integrated Water Services and any requirements by of the client.

- Verify that proper safety equipment is available, functioning properly, and is utilized.
- Check and remain aware of wind conditions and direction.
- Perform a thorough check of the downwind area prior to the start of any potentially hazardous work activity.
- Check for other personnel.
- Check for unidentified ignition sources.
- Ventilate work areas by venting and purging lines and vessels prior to beginning any work activities.
- Keep all non-essential personnel away from work areas.
- Immediately vacate the area when any H2S monitor sounds and do not re-enter without proper respiratory protection.

Required Equipment
The following equipment shall be provided and used as required by this program:

- Methods of detecting H2S by the use of fixed or portable monitors that will alarm at the appropriate permissible exposure limits of 10 PPM.
- Portable H2S gas testing instrument, either electronic or manual pump operated, capable of testing the suspected concentrations of H2S in the system.
- Each testing instrument must be capable of testing the suspected concentrations of H2S by using the manufacturer's recommended calibrated tube or other means of measuring the concentration of gas.
- Testing instruments shall be calibrated periodically according to the manufacturer's recommendation, and at least annually.
- Calibration kits with a regulator for calibrating the personal monitor.
- Calibration gas cylinder for testing the personal monitor.
- Approved self-contained breathing apparatus or airline respirator with escape SCBA should be used with H2S with a 5-minute escape pack, and shall be worn when opening the equipment to the surrounding atmosphere.
- At least one person (per two workers), equipped with a SCBA will act as a stand-by person and may not participate in the work being performed until the atmosphere has been tested and found to have no H2S present in quantities over 10 PPM. The stand-by person shall be stationed up wind, within 100 feet and in clear view of the workers.
- If an operator or other third party provides the stand-by person, it will be the responsibility of the Integrated Water Services manager/supervisor in charge to verify that the person has been H2S, CPR, and First Aid trained, and that they have been provided the proper respiratory equipment.
- Respirator wearers requiring corrective eyewear will be fitted with spectacle kits according to the respirator manufacturer, at no expense to the employee.
- Respirators and their components including all fittings of hoses shall not be interchanged, which if done, would violate the approval rating of said respirator or related equipment.

Medical
Each employee shall have completed a medical evaluation by a physician or licensed health care professional to determine the employee's ability to wear a respirator as required by the Integrated Water Services Respiratory Protection Program.

Each employee will successfully complete the medical questionnaire and examination before being allowed to be fit tested with a respirator.

Training
Employees required to work on H2S locations will be trained. Training shall consist of:

- Physical and chemical properties of H2S
- Sources of H2S
- Human physiology
- Signs and symptoms of H2S exposure, acute and chronic toxicity
- Symptomatology of H2S exposure
- Medical evaluation
- Work procedures
- Personal protective equipment required working around H2S
- Use of contingency plans and emergency response
- Burning, flaring, and venting of H2S
- State and federal regulatory requirement
- H2S release dispersion models
- Rescue techniques, first aid, and post exposure evaluation
- Use, care, and calibration of personal monitors and gas detection instruments
- Respirator inspections and record keeping

Each respirator wearer will complete Respiratory Protection training and a Respirator Fit Test, after being given a medical clearance and before entering any H2S location.

Employees and other personnel visiting H2S locations who will not be involved in the work shall be briefed in the following areas prior to entering:

- Site-specific sources of H2S
- Health hazards of H2S
- Routes of egress
- Emergency assembly areas
- Applicable alarm signals and
- How to respond in the event of an emergency.

Rescue
Each employee, when working alone in a H2S designated area, shall plan and become familiar with self-escape procedures to include being aware of wind direction and obstacles to avoid when exiting the work area.

Employees working under the buddy system shall pre-plan an emergency rescue and/or evacuation procedure prior to commencing work and arrange for periodic communications with his/her supervisor.

Respirator Inspections
Respirators will be inspected by the employee before each use and at least monthly.

The inspection will include the respirator face piece, hose, harness, 5-minute escape pack cylinder and all other components of the air supply systems used.

Monthly inspections will be documented as per the Integrated Water Services Respiratory Protection Program, and will be kept on file at the local office for review during safety audits.

Monitors and Gas Detector Calibration
Each personal H2S monitor shall be calibrated as per manufacturer requirements and the results recorded on the calibration log.

Those monitors that do not require calibrating shall be bump checked on a monthly basis with calibration gas to test alarms.

INCIDENT INVESTIGATION

Fishbone Root Cause Analysis (RCA)

Integrated Water Services, Inc.
(the Company)

Purpose

The purpose of this procedure is to establish a consistent and effective method for conducting a Root Cause Analysis (RCA) using the Fishbone Diagram (Ishikawa) method. This procedure is used to identify contributing factors and underlying root causes of recordable injuries and to develop corrective and preventive actions to prevent recurrence.

Scope

This procedure applies to all recordable injury incidents occurring at any worksite where employees or subcontractors are under operational control. It is intended for use by supervisors, safety personnel, and RCA team members during incident investigations.

Procedure

Define the Problem (The Head of the Fish)

Clearly state the injury or incident being investigated. Write this at the head (right side) of the Fishbone Diagram.
Example: 'Employee suffered a recordable injury: laceration to hand while stacking equipment.'

Identify Major Cause Categories (The Bones)

Use the following common categories to start your Fishbone Diagram:

- People: Training, behavior, fatigue
- Methods: Procedures, instructions, permits, JHAs
- Equipment: Tools, PPE, machinery
- Materials: Quality or type of materials
- Environment: Weather, lighting, workspace
- Management/Systems: Supervision, safety culture, schedules

Brainstorm Contributing Factors

For each category, brainstorm possible contributing factors with the team. Ask questions like:

- What could have contributed under this category?
- Were there missing or ineffective controls?

Continue asking 'Why?' or 'What else?' until all ideas are exhausted.

Analyze for Root Causes

Review the completed diagram:

- Look for repeated issues or common failures
- Identify failed or missing controls
- Prioritize potential root causes

Ask: 'If this were corrected, would the injury have been prevented?'

Define Corrective and Preventive Actions

For each root cause identified:

- Define corrective actions to fix immediate issues
- Define preventive actions to prevent recurrence

Assign responsible persons and deadlines for each action.

Document and Follow Up

Document the Fishbone RCA findings and outcomes:

- Create a summary report
- Track action items to closure
- Share lessons learned with relevant teams or organization-wide

Tips for a Successful Fishbone RCA

- Maintain a blame-free environment where we focus on systems, not individuals
- Involve a diverse team for better insights
- Use visual tools like whiteboards or large posters
- Preserve the diagram for records and further analysis

INCIDENT REPORTING

Integrated Water Services, Inc.
(the Company)

Purpose

The purpose of this program is to have effective procedures for reporting incidents.

Responsibilities

Individual responsibilities for reporting incidents are pre-determined and assigned prior to incidents.

Safety Director

- Ensures incidents are documented, reported, and investigated as required by this procedure.
- Tracks all corrective actions to close-out.
- Case manages all injury incidents and coordinates appropriate occupational injury care.

Site Manager/Supervisor

- Ensure incidents are reported as required by this procedure.
- Supports the Safety Director in the Case Management process.
- Gathers evidence, photos, documents, and witness statements to support the documentation and investigation process.
- Manage the corrective action to close.

Employees

- Immediately report any incident or near-miss that occurs to your immediate supervisor. If your immediate supervisor is not available in person or by phone, send a text message.
- Update your supervisor of any changes regarding the incident- changes could be changing conditions, severity, cost, regulatory interaction, law enforcement interaction, family inquiries, escalation in severity, etc.
- Follow-up to close out assigned corrective actions, be it treatment, corrective, or communications, etc.

Procedure

Incident Reporting

- Integrated Water Services investigates accidents and near-misses to prevent recurrence and ensure the safety of our employees and the environment. Accidents are undesired events that result in harm to people, damage to property, loss to process and/or the environment and/or damage to the reputation of the Company. Near-misses are defined as undesired events which, under slightly different circumstances, could have resulted in harm to people, damage to property, loss to process and/or the environment or damage to the reputation of the company. Both accidents and near misses are collectively referred to as Incidents.
- Employees and contractors are to report all Incidents, unsafe acts, and unsafe conditions to their supervisor as soon as possible and in accordance with the reporting guidelines set forth below. Reported Incidents may receive varying levels of investigation based on the severity of risk potential of the Incident.

Incidents Reporting Procedures

- Injury incidents must first be reported to the project supervisor and then to the WorkCare injury case management team by calling: 1-888-449-7787.
- In the event of an incident that requires immediate emergency response, contact 911 or the appropriate emergency services listed in the Emergency Action Plan (EAP) for your specific project. To create an EAP for your project, go to www.iws.support Emergencies tab and complete an Emergency Action Planning form. Upon submitting the form an EAP will be delivered to your email.
- All incidents shall be reported, documented, and investigated for causal factors, and the results must be reported to Integrated Water Services utilizing the incident notification form located in the Company Support Center at www.iws.support in the Incident Management tab. The incident notification form will also be utilized as a means for tracking changing conditions or diagnosis surrounding incidents. It is the responsibility of the Integrated Water Services supervisor, the project safety steward, and the safety director to cooperate in the action of gathering and reporting incident related information.
- When an incident report is initiated, the notification process is automated via conditional logic tools that manage the desired workflow. It is imperative that the information reported is truthful and thorough throughout all phases of response and investigation.

Spill and Hazardous Substance Reporting

- Spills of hazardous substance shall be reported through the Integrated Water Services Support Center Spill Report Form at www.iws.support in the Incident Management tab. It is required that spills in excess of the respective state's reportable quantity be reported in compliance with state requirements. In some cases, there are federal reporting requirements in addition to state requirements.
- All state reporting requirements are made available in the Incident Management tab of the Support Center. Only the Environmental Engineers, the Safety Director, or their designates are allowed to submit a state report on behalf of the Company.

OSHA Reporting

Fatality: Within eight (8) hours after the death of any employee as a result of a work-related incident, Integrated Water Services Safety Director shall report the fatality to the Occupational Safety and Health Administration (OSHA), U.S. Department of Labor.

In-patient hospitalization, amputation, or loss of an eye: Within twenty-four (24) hours, Integrated Water Services Safety Director must report in-patient hospitalization, amputation, or loss of an eye (severe injuries) to OSHA.

OSHA reports must be made using one of the following methods:

- by telephone or in person to the OSHA Area Office that is nearest to the site of the incident,
- by telephone to the OSHA toll-free central telephone number, 1-800-321-OSHA (1-800-321-6742),
- or by electronic submission using the reporting application located on OSHA's public web site at www.osha.gov.

INTEGRATED WATER SERVICES

Internal Reporting Guidelines

Incident Report Notification Flowchart

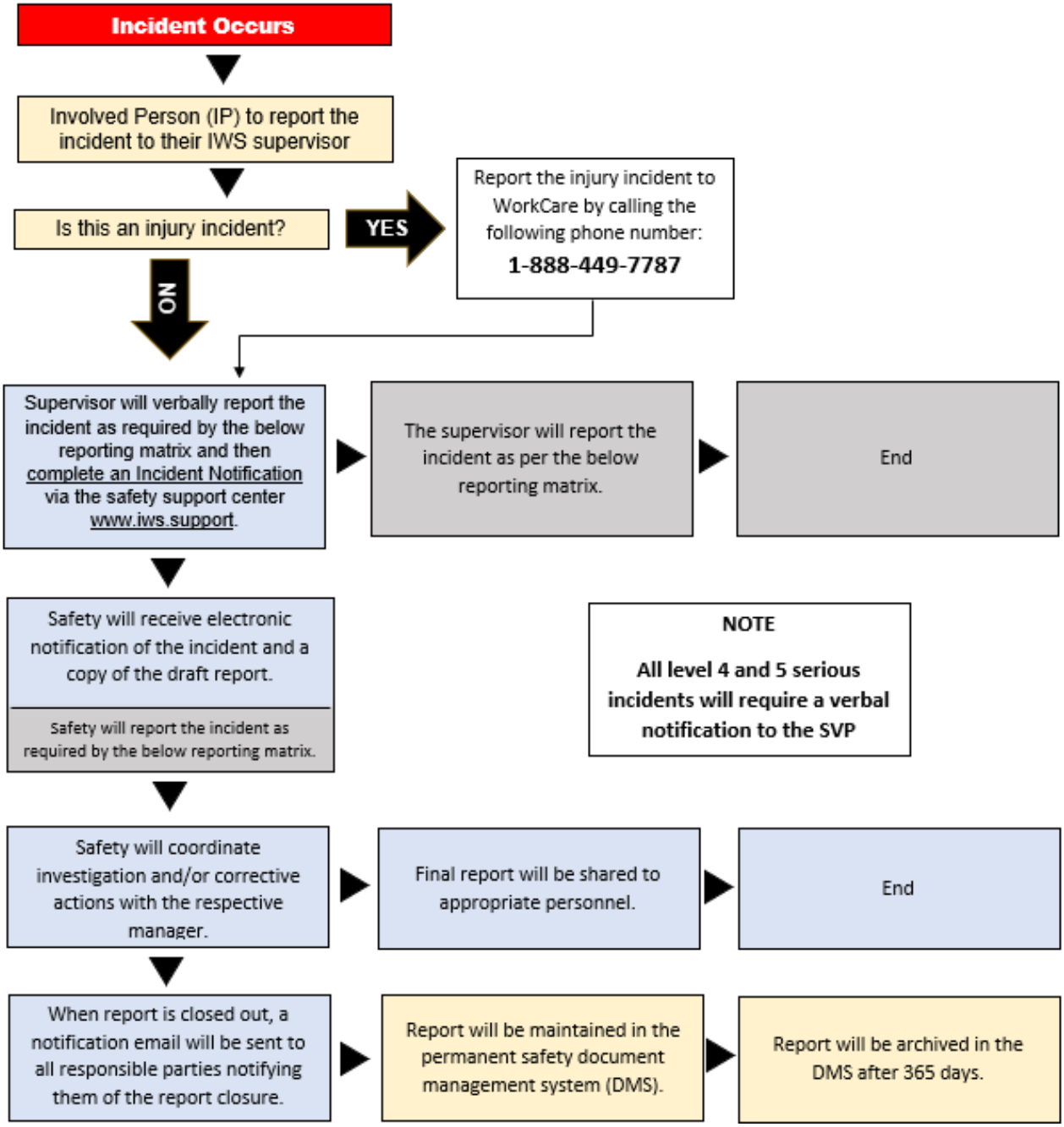

INTEGRATED WATER SERVICES

SEVERITY	CONSEQUENCE				PROBABILITY				
	P	E	A	R	1 Never Happened	2 Happened 1/5 Years	3 Happens 1/Year	4 More Than 1/Year	5 Frequent Occurrence IDLH
0	No Health Affect	**No Affect**	**No Damage**	**No Impact**	0	0	1	1	2
1	First Aid Injury	**Slight Affect** *immediate remediation possible*	**Slight Damage** *no cost*	**Potential Minor Impact** *near-miss*	0	0	1	2	3
2	Recordable Injury	**Minor Affect** *contained/ one worker*	**Minor Damage** *<$25k*	**Slight Impact** *internal impact*	0	1	2	3	3
3	Lost Time Injury	**Localized Affect** *contained/ requires work stoppage*	**Serious Damage** *>$25k <$75k*	**Limited Impact** *single customer*	1	2	3	3	4
4	Single Fatality	**Major Affect** *recordable/ not contained*	**Major Damage** *>$75k <$150k*	**Considerable Impact** *multiple customers potential national impact*	2	3	4	5	5
5	Multiple Fatalities	**Massive Affect** *not contained/ requires emergency responders/ fire/ media*	**Catastrophic Damage** *>$150k*	**Global Impact** *multiple customers national impact*	3	4	5	5	5

IDLH: Immediately Dangerous to Life or Health

REACTION KEY & REPORTING MATRIX	
0	No immediate action required- manage risk to prevent escalation to a higher risk category. Local notification report maintained within department.
1	Schedule remediation for most convenient operational window – 6-month deadline. Local notification report maintained within department.
2	Schedule remediation at earliest available operational window – 90-day window. Local notification report maintained within department.
3	Make special arrangements to schedule remediation – 7-day window. Report escalated to department Director or Region VP.
4	Stop the work that presents the hazard immediately and eliminate the risk immediately. Report escalated to department SVP. SVP report to CEO as appropriate.
5	Stop the work that presents the hazard immediately and eliminate the risk immediately. Report escalated to department SVP. SVP report to CEO as appropriate.
CONSEQUENCE KEY	
P	People
E	Environmental
A	Assets
R	Reputation

Incident Preservation

Get pictures of the area and all associated equipment and grounds of the incident. Close-up and distance photos are most helpful.

In the event of an OSHA reportable injury, the site shall be preserved 100% until released by the OSHA CSHO or the investigating law enforcement agency. The Safety Director will provide notification to Company personnel that the site has been released back to operations.

Collection/Preservation and Security of Evidence

In some cases, as determined by the Safety Director, evidence such as people, positions of equipment, parts, and papers must be preserved, secured, and collected through notes, photographs, witness statements, flagging, and impoundment of documents and equipment.

Witness Interviews and Statements

Witness interviews and statements must be collected. Locating witnesses, ensuring unbiased testimony, obtaining appropriate interview locations, and use of trained interviewers should be detailed. The need for follow-up interviews should also be addressed.

The final incident investigation report consists of findings with critical factors, evidence, corrective actions, responsible parties, and timelines for corrective action completion.

Written Incident Report

The IWS Incident Notification form must be completed for every Near Miss and Incident that occurs in Company operations. Spills must be documented in the Spill Notification form that is located at www.iws.support in the Incident Management tab.

The supervisor takes the following steps after an injury incident.

- Provide for medical or emergency response as appropriate.
- Secure the area or evacuate and muster as quickly as possible.
- Secure evidence as necessary.
- Notify project management via phone.
- Identify potential witnesses and retrieve statements.
- Use investigation tools, as needed to record the scene (camera, drawings, video, etc.)
- Tag out as appropriate any equipment that was involved (evidentiary purposes).

Vehicle Accidents

In an attempt to minimize the results of an accident, the driver must move the vehicle from the highway, if possible, to prevent further damage or injuries. The following steps must be taken in response to all vehicle accidents:

- Call for medical aid if necessary.
- Call the police. All accidents, regardless of severity, must be reported to the police. If the driver cannot get to a phone, he should write a note giving location to a reliable appearing motorist and ask them to notify the police.
- Record names and addresses of driver, witnesses, and occupants of the other vehicle(s) involved in the accident.
- Complete the Incident Notification form located in the Support Center at www.iws.support.
- Gather the following information: license number of other drivers; insurance company names and policy numbers of other vehicles; make, model, and year of other vehicles; date and time of accident; and overall road and weather conditions.
- Use your cell phone to capture a photo of the other driver's insurance policy information.
- Use your cell phone to take pictures of the scene from a distance far enough away to capture all vehicles involved and get close up photos of the damage. If there are any contributing factors or tangibles, get photos of those as well.
- Do not discuss the assumed cause of the accident with anyone at the scene except the police.

- Do not accept any responsibility for the accident. Don't argue with anyone.
- Provide the other party with your name, address, driver's license number, and insurance information.
- Immediately report the accident to your manager and the HR Director.

Note: There will be a formal accident review conducted on each accident to determine the cause and how the accident could have been prevented.

Driver Guidelines and Reporting Requirements

- Company vehicles are to be driven by authorized employees only, except in the case of repair testing by a mechanic.
- All accidents in company vehicles, regardless of severity, must be reported to the police and to the Safety Director. Accidents are to be reported immediately from the scene of the accident. Accidents in personal vehicles while on company business must follow these same accident procedures. Work related vehicle accidents that cause injury to the employee must be reported to the Safety Director and HR Director for Worker's Compensation purposes. Failing to stop after an accident and/or failure to report an accident may result in disciplinary action, up to and including termination of employment.

Training

Integrated Water Services shall train appropriate personnel in their responsibilities for incident reporting. Training requirements relative to incident reporting are described below:

- Roles & responsibilities
- First responder responsibilities
- Evidence preservation
- Reporting
- The initial investigation at the accident scene
- Managing the incident and investigation
- Collecting data
- Developing conclusions and judgments
- Reactive measures

INJURY AND ILLNESS PREVENTION

Integrated Water Services, Inc.
(the Company)

Purpose

The purpose of this Illness Prevention Program (IIP) program is to prevent job related injury and illness to Company employees and contractors.

Scope

This policy applies to all Company employees and contractors.

When work is performed by a subcontractor on a company site, the contractor's written safety program shall take precedence for their employees. However, subcontractors may adopt this procedure for their use.

Responsibility

The Injury and Illness Prevention Program administrator, George Bunker, has the authority and responsibility for implementing the provisions of this program for Integrated Water Services, Inc.

Managers and Supervisors

- All managers and supervisors are responsible for implementing and maintaining the IIP Program in their work areas and for answering worker questions about the IIP Program.

Employees

- All workers, including managers and supervisors, are responsible for complying with safe and healthful work practices. Our system of ensuring that all workers comply with these practices include one or more of the following practices:
    - Informing workers of the provisions of our IIP Program.
    - Evaluating the safety performance of all workers.
    - Recognizing employees who perform safe and healthful work practices.
    - Providing training to workers whose safety performance is deficient.
    - Disciplining workers for failure to comply with safe and healthful work practices.
    - Providing ready access to company safety and performance expectations
    - Providing the right tools and PPE to our employees

Communication

Managers and supervisors will communicate with all workers about occupational safety and health utilizing various tools including the online Safety Support Center located at www.iws.support. The safety information at the Support Center will be made accessible to all workers without the burden of password or log-in credentials. Our communication system encourages all workers to communicate freely about critical safety information and to inform their managers and supervisors about workplace hazards without fear of reprisal. The safety program will utilize a safety committee and project-based safety stewards who will be the driving force behind the world class safety program here at Integrated Water Services.

Our communication system includes one or more of the following checked items:

- An online interactive safety management system that provides readily accessible safety resources and interactions to all affected employees, customers, and stakeholders.
- New worker orientation including a discussion of safety and health policies and procedures.

- Review of this IIP Program.
- Workplace safety and health training programs.
- Regularly scheduled and impromptu safety meetings.
- Posted or distributed safety information.
- A system for workers to anonymously inform management about workplace hazards.
- Online Hazard Communication system.

Hazard Assessment

Periodic inspections to identify and evaluate workplace hazards shall be performed by a competent observer in the following areas of our workplace:

General Health & Safety	Tools, Machines, and Tools	Motorized Vehicles
People & Behaviors	Welding, Cutting, and Hotwork	Forklifts and Manlifts
Fire Protection & Prevention	Electrical	Excavations, Trenching and Shoring
Signs, Signals, & Barricades	Ladders, Stairs, and Catwalks	Ponds and Water Wells
Material Handling, Storage, and Disposal	Lifting Operations and Equipment	Confined Spaces

Periodic inspections are performed according to the following schedule:

- When we initially start each project.
- On a quarterly basis, or
- When new substances, processes, procedures, or equipment that present potential new hazards are introduced into our workplace.
- When new, previously unidentified hazards are recognized.
- When occupational injuries and illnesses occur.
- Whenever workplace conditions warrant an inspection.

Accident/Exposure Investigations

Procedures for investigating workplace accidents and hazardous substance exposures include:

- Visiting the accident scene as soon as possible.
- Interviewing injured workers and witnesses.
- Examining the workplace for factors associated with the accident/exposure.
- Determining the cause of the accident/exposure.
- Taking corrective action to prevent the accident/exposure from reoccurring.
- Recording the findings and corrective actions taken.
- Communicating lessons learned with Company employees.

Hazard Correction

Unsafe or unhealthy work conditions, practices, or procedures shall be corrected in a timely manner based on the severity of the hazards. Hazards shall be corrected according to the following procedures:

- When observed or discovered.
- When an imminent hazard exists that cannot be immediately abated without endangering employee(s) and/or property, we will remove all exposed workers from the area except those necessary to correct the

existing condition. Workers necessary to correct the hazardous condition shall be provided with the necessary protection.

Training and Instruction

All workers, including managers and supervisors, shall have training and instruction on general and job-specific safety and health practices. Training and instruction is provided as follows:

- To all new workers, except for construction workers who are provided training through a construction industry occupational safety and health program approved by Cal/OSHA.
- To all workers given new job assignments for which training has not previously been provided.
- Whenever new substances, processes, procedures, or equipment are introduced to the workplace and present a new hazard.
- Whenever we are made aware of a new or previously unrecognized hazard.
- To supervisors to familiarize them with the safety and health hazards to which workers under their immediate direction and control may be exposed.
- To all workers with respect to hazards specific to each employee's job assignment.

General workplace safety and health practices include, but are not limited to, the following:

- Implementation and maintenance of the IIP Program.
- Emergency action and fire prevention plan.
- Provisions for medical services and first aid, including emergency procedures.
- Prevention of musculoskeletal disorders, including proper lifting techniques.
- Proper housekeeping, such as keeping stairways and aisles clear, work areas neat and orderly, and promptly cleaning up spills.
- Prohibiting horseplay, scuffling, or other acts that tend to adversely influence safety.
- Proper storage to prevent stacking goods in an unstable manner and storing goods against doors, exits, fire extinguishing equipment and electrical panels.
- Proper reporting of hazards and accidents to supervisors.
- Hazard communication, including worker awareness of potential chemical hazards, and proper labeling of containers.
- Proper storage and handling of toxic and hazardous substances, including prohibiting eating or storing food and beverages in areas where they can become contaminated.

Employee Access to the IPP

Employees are provided immediate access to this IPP via the Company online Safety Support Center located at www.iws.support in the Procedures tab.

Recordkeeping

The company has a workers' compensation modification rate lower than a 1.0 and is not listed on a designated high hazard industry list. We have taken the following steps to implement and maintain our IIP Program:

- Records of hazard assessment inspections, including the person(s) or persons conducting the inspection,

the unsafe conditions and work practices that have been identified and the action taken to correct the identified unsafe conditions and work practices, are recorded on a hazard assessment and correction form.

- Documentation of safety and health training for each worker, including the worker's name or other identifier, training dates, type(s) of training, and training providers are recorded on a worker training and instruction form. We also include the records relating to worker training provided by a construction industry occupational safety and health program approved by Cal/OSHA.
- Inspection records and training documentation will be maintained according to the following checked schedule:
- For the length of the workers employment and one additional year.

Forms

The location of all forms including; Hazard Assessment, Incident Notification and Investigation, Near Miss, Good Catch, and Employee Training are available at: www.iws.support.

LADDERS

Integrated Water Services, Inc.
(the Company)

Purpose

The purpose of the program is to prescribe rules and establish minimum requirements for the construction, care, and use of the common types of ladders.

Scope

This program is applicable to all employees of the Company.

When work is performed by a subcontractor on a company site, the contractor's written safety program shall take precedence for their employees. However, subcontractors may adopt this procedure for their use.

Definitions

Ladder: an appliance usually consisting of two side rails joined at regular intervals by cross- pieces called steps, rungs, or cleats, on which a person may step in ascending or descending.

Stepladder: a self-supporting portable ladder, nonadjustable in length, having flat steps and a hinged back. Its size is designated by the overall length of the ladder measured along the front edge of the side rails.

Single ladder: a non-self-supporting portable ladder, nonadjustable in length, consisting of only one section. The overall length of the side rail designates its size.

Extension ladder: a non-self-supporting portable ladder adjustable in length. It consists of two or more sections traveling in guides or brackets so arranged as to permit length adjustment. Its size is designated by the sum of the lengths of the sections measured along the side rails.

Fixed ladder: a ladder permanently attached to a structure, building, or equipment.

Individual-rung ladder: a fixed ladder each rung of which is individually attached to a structure, building, or equipment.

Cage: a guard that may be referred to as a cage or basket guard, which is an enclosure that is fastened to the side rails of the fixed ladder or to the structure to encircle the climbing space of the ladder for the safety of the person who must climb the ladder.

Key Responsibilities

Managers and Supervisors

- Superintendents are responsible for ensuring that all employees have been trained in the use and inspection of ladders in accordance with the manufacture's guidelines.
- Superintendents are responsible for ensuring that all employees and subcontractors are aware that if an inspection discovers a defect, the ladder shall be taken out of service and repaired or discarded.

Employees and Subcontractors

- Employees and sub subcontractors shall inspect ladders prior to each use to ensure the proper safe working condition of the ladder.
- Employees and subcontractors are responsible for following this program and reporting any damage or repairs that may be needed to their supervisor.

Procedure

Inspection, Care and Safe Work Practices of Ladders

Inspection

- Ladders shall be inspected for visible defects on a periodic basis and after any occurrence that could affect their safe use.
- Ladders used by Integrated Water Services employees and/or subcontractors must meet OSHA/ANSI specifications.
- Ladder rungs, cleats, and steps shall be parallel, level, and uniformly spaced when the ladder is in position for use.
- Portable and fixed ladders with structural defects such as but not limited to broken or missing rungs, cleats, or steps, broken or split rails, corroded components, or other faulty or defective components shall either be immediately marked in a manner that readily identifies them as defective or be tagged with "Do Not Use" or similar language, or they shall be withdrawn from service and discarded or repaired.
- If a ladder is tipped over, it shall be inspected by a competent person for side rail dents or bends, or excessively dented rungs- check all rung to side rail connections, check hardware connections and check rivets for shears.
- All wood parts shall be free from sharp edges and splinters and not painted.

Care

- Ladders shall always be maintained in good condition, the joint between the steps and side rails shall be tight, all hardware and fittings shall be securely attached, and the movable parts shall operate freely without binding or undue play.
- Metal bearings of locks, wheels, pulleys, etc., shall be frequently lubricated.
- Frayed or badly worn rope shall be replaced. Safety feet and other auxiliary equipment shall be kept in good condition to ensure proper performance.
- Rungs shall be kept free of grease and oil.

How to Safely Use Ladders

- Ladders shall be used only for the intended purpose for which they were designed. Never use ladder in a horizontal position or as scaffolding and do not place ladders on top of boxes, barrels, crates, etc.
- The ladder shall be secured at the top or held by another person at the base.
- The footing of the ladder shall be placed on a stable and level surface.
- Extension ladders should be placed against the top support at a 4:1 incline. Ladders shall be used at an angle such that the horizontal distance from the top support to the foot of the ladder is approximately one-quarter of the working length of the ladder. (The distance along the ladder between the foot and the top support.)

- When ladders are not able to be extended, the ladder shall be secured at its top to a rigid support that will not deflect.
- Ladders shall not be used in a horizontal position as platforms, runways, or scaffolds.
- Ladders shall not be used by more than one person at a time.
- Ladders shall not be placed in front of doors opening toward the ladder unless the door is blocked open, locked, or guarded.
- If a ladder is used in a high traffic area, barricades shall be placed to avoid accidental displacement due to collisions.
- Do not stand on the top two rungs of a vertical ladder.
- Always follow manufacturer instructions.

On two-section extension ladders the minimum overlap for the two sections in use shall be as follows:

Size of Ladder (feet)	Overlap (feet)
Up to and including 36’	3
Over 36 up to and including 48’	4
Over 48 up to and including 60’	5

- The upper supports of ladders used to access elevated work areas must extend a minimum of 3 feet above the elevated surface. When ladders are not able to be extended then the ladder shall be secured at its top to a rigid support that will not deflect.
- The ladder side rails shall extend at least 3 feet (.9m) above the upper landing surface. When ladders are not able to be extended then the ladder shall be secured at its top to a rigid support that will not deflect.
- The employee or subcontractors shall always maintain a three (3)-point grip on the ladder and carry tools/equipment on a belt or hoist up. Workers traversing ladders should not carry anything in their hands that could cause injury in case of fall.
- The employee or subcontractors shall face the ladder while ascending or descending.
- The bracing on the back legs of step ladders is designed solely for increasing stability and not for climbing.
- The ladder shall not be moved while occupied.

Portable Ladders

Stepladders shall not be longer than 20 feet. Single ladders shall not be longer than 30 feet. Two-section extension ladders shall not be longer than 60 feet. All ladders of this type shall consist of two sections, one to fit within the side rails of the other and arranged in such a manner that the upper section can be raised and lowered.

Keep all ladders at least ten (10) feet away from power lines.

Ladders shall not be loaded beyond the maximum intended load for which they were built, nor beyond the manufacturer's rated capacity.

Weight includes the combined weight of the climber and his tools and equipment. Ladders are rated as the following:

- I (holds 250 Ibs)
- I-A (holds 300 Ibs)
- II (holds 225 Ibs)
- III (holds 200 Ibs)

Fixed Metal Ladders
Ladders shall be constructed to withstand a minimum of 200 pounds.

All metal rungs shall have a minimum diameter of ¾ inches and wooden rungs shall have a minimum diameter of 1 1/8 inches.

Rungs shall not be more than 12 inches apart and shall be uniform throughout the length of the ladder.

Rungs shall be a minimum length of 16 inches and provide protection that prevents the climber's foot from slipping off the end.

Rungs shall have a minimum of 7 inches between themselves and the structure behind it.

A fall restraint system must be provided for all fixed ladders greater than six feet in height.

- A Cage is required when the fixed ladder is twenty feet or greater.
- Cages on fixed ladders shall not begin at a point less than 7 feet nor greater than 8 feet from the walking surface below the cage.
- Cages shall provide a clear width of 15 inches in each direction of the rung's centerline.
- Cages shall not extend less than 27 inches, but not greater than 28 inches from the centerline of the rung.
- A climbing fall restraint system may be substituted for a ladder cage.

LOCKOUT TAGOUT (LOTO)

ENERGY ISOLATION

Integrated Water Services, Inc.

(the Company)

Purpose

The purpose of this program is to establish procedures for affixing appropriate lockout/tagout, energy isolating devices, or to otherwise disable machines or equipment to prevent unexpected energization, start up, or release of stored energy.

Scope

This procedure applies to all employees of the Company.

When work is performed by a subcontractor on a company site, the contractor's written safety program shall take precedence for their employees. However, subcontractors may adopt this procedure for their use.

Definitions

Affected employee: An employee whose job requires them to operate or use a machine or equipment on which servicing and maintenance is being performed under lockout/tagout, or whose job requires the employee to work in an area in which such servicing or maintenance is being performed.

Authorized employee: A person that performs lockout/tagout procedures on machines or equipment in order to perform servicing or maintenance on that machine or equipment. An affected employee becomes authorized when that employee's duties include performing servicing or maintenance covered under this program.

Capable of being locked out: An energy isolating device is capable of being locked out if it has a hasp or other means of attachment to which, or through which, a lock can be affixed, or it has a locking mechanism built into it. Other energy isolating devices are capable of being locked out if lockout can be achieved without the need to dismantle, rebuild, or replace the energy isolating device or permanently alter its energy control capability.

Energized: Connected to an energy source or containing residual or stored energy.

Energy isolating device: A mechanical device that physically prevents the transmission or release of energy, including but not limited to the following:

- A manually operated electrical circuit breaker, a disconnect switch, a manually operated switch by which the conductors and no pole can be operated independently, a line valve, a block and any similar device used to block or isolate energy.
- Push buttons, selector switches and other control circuit type devices are not isolating devices.

Lockout: The placement of a lockout device on an energy isolating device in accordance with an established procedure, ensuring that the energy isolating device and the equipment being controlled cannot be operated until the lockout device is removed.

Lockout device: A device that utilizes a positive means, such as either a key or combination type lock, to hold an energy isolating device in the safe position and prevent the energizing of a machine or equipment. Included are blank flanges and bolted slip blinds.

Normal operation: The utilization of a machine or equipment to perform its intended operation.

Potential Energy Sources: Any source of gas, electrical, mechanical, hydraulic, pneumatic, chemical, gravity, steam, thermal, tension or other energy sources.

Servicing and/or maintenance: Workplace activities such as constructing, setting up, adjusting, inspecting, modifying and maintaining and/or servicing machines and equipment, where the employee may be exposed to an unexpected energization or startup of the equipment or release of a hazardous energy source.

Setting up: Any work performed to prepare a machine or equipment for performing its normal operation.

Tagout: The placement of a tagout device on an energy isolating device, in accordance with an established procedure, to indicate that the energy isolating device and the equipment being controlled may not be operated until the tagout device is removed.

Tagout device: A prominent warning device, such as a tag and a means of attachment, which can be securely fastened to an energy isolating device in accordance with an established procedure, to indicate that the energy isolating device and the equipment being controlled may not be operated until tagout device is removed.

Key Responsibilities

Managers and Supervisors

- Responsible to control and enforce this plan and to see that all their employees and contractors that are affected by lockout/tagout procedures, have the knowledge and understanding required for safe application, usage, and removal of all energy controls and devices.
- Ensure employees are trained and comply with the requirements of this program.

Employees

- Employees who are affected by this program are required to attend training on an annual basis.
- Are required to follow the provisions of this program.

Procedure

General

Only an authorized employee or employees performing the servicing or maintenance shall perform lockout or tagout.

Devices

Lockout Device - If an energy source can be locked out, a device that utilizes a lock to hold an energy isolating device in a safe position shall be used. Each site shall have the same type of lock as specified by Integrated Water Services.

Tagout Device – If an energy source cannot be locked out with a lockout device, then a tagout device shall be used. Tagout devices are a warning only level of protection and shall be weather and chemical resistant, standardized in color with clear written warning of hazardous energy i.e. Do Not Operate; Do Not Start; Do Not Energize, etc. Each site shall have the same style of tags specified by Integrated Water Services.

Specific Energy Control Procedures
Each manager or supervisor is responsible for developing specific step-by-step shutdown and startup procedures for a particular machine or piece of equipment in their respective area.

- A written, step-by-step isolation procedure for shutdown and startup shall be prepared for each type of machine or piece of equipment.
- This procedure shall include:
    - Equipment number if assigned
    - Equipment location
    - Energy Source(s) (i.e., electrical, hydraulic, gas pressure, etc.)
    - Location of isolating controls (i.e., breaker switches, valves, etc.)
    - Quantity of isolating controls
    - Quantity of locks required to isolate the equipment
    - Other hardware required to isolate the equipment (i.e. chains, valve covers, blocks, etc.)
    - List any residual energy required to be dissipated before work begins

Specific Sequence for Application of Energy Control

1. Notification
Authorized employees must notify all other affected employees of the application and removal of lockout/tagout devices. Notification shall be given before the controls are applied and before they are removed from the machine or equipment.

2. Preparation for Shutdown
Before an authorized or affected employee turns off a machine or equipment, the authorized employee shall have knowledge of the type and magnitude of the energy, the hazards of the energy to be controlled and the methods or means to control the energy.

3. Machine or Equipment Shutdown
The machine or equipment shall be turned off or shutdown using the procedures established for the machine or equipment. An orderly shutdown must be utilized to avoid any additional or increased hazard(s) to employees as a result of the equipment stoppage.

4. Machine or Equipment Isolation
All energy isolating devices that are needed to control the energy to the machine or equipment shall be physically located and operated in such a manner as to isolate the machine or equipment from the energy source.

5. Lockout/Tagout Devices and Application

- Each authorized employee shall have the proper number of locks and devices to be able to perform proper lockout/tagout procedures for machines or equipment that they may be working on.
- Lockout or tagout devices shall be affixed to each energy isolating device by authorized employees.
- Lockout and tagout devices shall include name of individual placing device. Devices shall indicate the identity of the employee applying the device.
- Lockout devices shall be affixed in a manner to hold the energy isolating devices in a safe or off position.

- Tagout devices shall be affixed in a manner that will clearly indicate that the operation or movement of isolating devices from the safe or off position.
- Tagout devices used with energy isolating devices with the capability of being locked out shall be fastened at the same point at which the lock would have been attached. If a tag cannot be directly attached to the energy isolation device, it shall be located as close and as safely as possible to the device in a position that will be immediately obvious to anyone attempting to operate the device.
- Each energy source shall be locked out completely isolating the equipment.
- Isolating machines or equipment shall include, but are not limited to:
    - Pumps, compressors, generators, electric distribution, storage tanks, etc.
    - Each type of equipment to be isolated shall have specific procedures for isolation, i.e. for compressors: suction, discharge, power, starting, fuel, dumps shall be closed, locked and tagged out properly. The blow-down valve shall be opened, locked and tagged out properly. (NOTE): If compressor has a side stream hooked up, the side stream shall be closed, locked and tagged out properly.

6. Stored Energy and the Possibility of Reaccumulation
Following the application of lockout or tagout devices to energy isolating devices, all potentially hazardous stored or residual energy shall be relieved, disconnected, restrained, and otherwise rendered safe.

If there is a possibility of re-accumulation of stored energy, verification of isolation shall be continued until the servicing or maintenance operation is completed, or until the possibility of such accumulation no longer exists.

7. Verification of Isolation
Prior to starting work on machines or equipment that have been locked or tagged out; the authorized employee shall verify that isolation and deenergization of the machine or equipment have been accomplished.

Procedures for Handling Multiple Groups of Workers Involved in a Group Lockout
A crew of authorized employees may use a group lockout or tagout device. This will afford the group of employees a level of protection equal to that provided by a personal lockout or tagout device. Procedures include:

- A tailgate meeting shall be conducted to review the lockout procedures and other information as required for safe work to continue – all crafts and effected departments shall be involved.
- An authorized employee will isolate the equipment and ascertain the exposure status of individual group members.
- All workers will then place their individual locks on the device's group lockout or tagout device after they have verified the procedure.
- An authorized employee has primary responsibility for a set number of employees working under the protection of a group lockout or tagout device. The authorized employee should ascertain the exposure status of individual group members. Each Integrated Water Services employee or contractor shall attach a personal lockout or tagout device to the group's device while he/she is working and then removes it when finished.
- During shift change or personnel changes, there are specific procedures to ensure the continuity of lockout or tagout procedures. These include:
    - In the event shift or personnel changes occur during maintenance and/or repair activities, the designated Integrated Water Services employee in charge shall take the necessary steps to maintain the continuity of the lockout/tagout protection. This includes maintaining that all

provisions in this procedure are adhered to and the transfer of lockout/tagout devices between authorized employees is accomplished.

- No work shall be allowed to proceed following personnel or shift change unless these requirements are met. The job supervisor must observe that all personnel or shift change locks or tags are properly transferred during the process.
- Before the last outgoing person is allowed to leave, they must remove their lock (or warning tag) and the incoming Integrated Water Services person shall affix their lock or (warning tag) to prevent the lock out device or tag warning device from ever not being locked or warning if a lock out device is not practicable.
- This also applies to all group lockout tagout situations.
- This also applies to all contract personnel working on Integrated Water Services or client projects.
- If any outgoing person leaves the site and their lock/tag is still attached, then follow Removal of Locks guidelines below.

Release from Lockout/Tagout

When servicing or maintenance is completed or when Lockout / Tagout devices must be temporarily removed, the equipment requires testing and the machine or equipment is ready for testing or to return to normal operating conditions, the following steps shall be taken, in this order:

- Check the machine or equipment and the immediate area surrounding the machine or equipment to ensure that all nonessential items such as tools have been removed and that the machine or equipment components are operationally intact.
- Check the work area to ensure that all personnel have been safely positioned or removed from the area.
- Remove the Lockout/Tagout device.
- Energize and proceed with testing.
- Deenergize and reapply control methods including Lockout / Tagout devices.
- Document the procedure by use of the completed isolation log and provide to supervisor for filing.

Removal of Locks

The authorized employee who applied the lock shall be the one to remove their lock. However, after all work has been completed, certain conditions may arise which prohibit this person from being present to remove the lock.

The following procedures shall be followed to allow for the removal of a lock that another person has applied:

- Every effort shall be made to contact the authorized employee who applied the lock to obtain the key(s).
- If the key(s) cannot be made available, the employee who requests removal of the lock shall contact their supervisor.
- The supervisor shall verify that every effort was made to contact the original authorized employee who applied the lock and to obtain the key(s).
- The employee removing the lock shall note on the Service Report that the lock(s) were removed with permission by supervisor.
- All reasonable efforts will be made by supervisor to notify that employee their lock has been removed, ensuring that the authorized employee has this knowledge before they return to work.
- If the equipment is client owned, the supervisor or employee requesting to remove the lock(s) shall contact the client to get the lock removed. Clients must remove their lock(s).
- NOTE: Integrated Water Services employees shall not remove any client locks.

Contractors
Contractors performing lockout procedures on Integrated Water Services property shall comply with this procedure. Contractors shall supply their own locks. Integrated Water Services shall initially lockout Integrated Water Services machines and equipment before the contractor will be allowed to apply their own lock in addition to the Integrated Water Services lock.

Periodic Inspections of the Energy Control Procedure
Periodic inspections of the energy control procedure are conducted and documented at least annually to ensure procedures and requirements are being followed. Periodic inspections of the energy control procedure must be conducted at least annually to ensure that the procedure is being followed.

The Integrated Water Services Safety Manager or their designee performs the inspection (it must be someone other than those actually using the lockout/tagout in progress). The inspector will produce a certified review of the inspection including date, equipment, and employees, and the inspection shall be documented. They will verify that:

- Each authorized and/or affected employee has been trained as required.
- Current procedures are adequate for performing complete isolation of equipment and resulting in a zero-energy state.
- A copy of the audit maintained on file at the managers/supervisor's office.

EMPLOYEE TRAINING

The training must include recognition of hazardous energy source, type and magnitude of energy available, methods and means necessary for energy isolation and control.

Each authorized employee shall receive adequate training.

All affected employees are instructed in the purpose and use of the energy control procedure.

Any other employees whose work operations are or may be in an area where energy control procedures may be utilized are instructed in the purpose and use of the energy control procedure.

Additional training includes:

- The purpose and use of energy control procedures.
- When tagout systems are used, employees shall also be trained in the following limitations of tags:
    - Tags are essentially warning devices affixed to energy isolating devices, and do not provide the physical restraint on those devices that is provided by a lock.
    - When a tag is attached to an energy isolating means, it is not to be removed without authorization of the authorized person responsible for it, and it is never to be bypassed, ignored, or otherwise defeated in any way.
    - Tags must be legible and understandable by all authorized employees, affected employees, and all other employees whose work operations are or may be in the area, in order to be effective.
    - Tags and their means of attachment must be made of materials which will withstand the environmental conditions encountered in the workplace.

- Tags must be securely attached to energy isolating devices so that they cannot be inadvertently or accidentally detached during use.
- Tags may evoke a false sense of security, and their meaning needs to be understood as part of the overall energy control program.

Retraining

Retraining shall be conducted whenever a periodic inspection reveals, or whenever Integrated Water Services has reason to believe that there are deviations from or inadequacies in the employee's knowledge or use of the energy control procedures.

Retraining is required when there is a change in job assignments, in machines, a change in the energy control procedures, or a new hazard is introduced.

The retraining shall reestablish employee proficiency and introduce new or revised control methods and procedures, as necessary.

Training Documentation

Integrated Water Services shall certify that employee training has been accomplished and is being kept up to date. All training and/or retraining must be documented, signed and certified.

Lockout/Tagout Isolation Log

Integrated Water Services employees shall complete an isolation log prior to working on energized equipment or equipment with the potential for stored energy. The Lockout/Tagout Isolation log can be found at: www.ims.support.com/forms.

SAMPLE LOCK

SAMPLE TAG

MACHINE GUARDING

Integrated Water Services, Inc.
(the Company)

Purpose

This procedure establishes safety requirements for machine guarding at Integrated Water Services (IWS) to prevent injuries related to equipment operation, such as amputations, entanglement, and crushing hazards. It ensures compliance with OSHA 29 CFR 1910.212 – General Requirements for Machine Guarding while aligning with IWS's operational and safety standards.

Scope

This procedure applies to all IWS employees, contractors, and visitors working around machinery at construction sites, water treatment facilities, and fabrication areas.

Key Responsibilities

Supervisors & Site Leads:

- Ensure machine guards are in place and functioning before operation.
- Conduct inspections and enforce compliance.
- Halt machine use if guards are missing or damaged.

Employees & Operators:

- Use and inspect machine guards before operation.
- Never bypass, modify, or remove guards.
- Report missing or damaged guards immediately.

Maintenance & Field Service Teams:

- Repair or replace defective guards promptly.
- Ensure guards meet OSHA standards before returning equipment to service.

HSEQ (Health, Safety, Environmental & Quality) Team:

- Conduct periodic audits to ensure compliance.
- Provide training on proper guarding practices.

Machine Guarding Requirements

Types of Guards Used at IWS

- **Fixed Guards:** Permanent barriers covering hazardous machine parts.
- **Interlocked Guards:** Prevent machine operation if removed.
- **Adjustable Guards:** Adapt to different tasks while maintaining protection.
- **Self-Adjusting Guards:** Automatically reposition as needed for safe operation.

Specific Guarding Applications

- **Pumps, Motors, and Rotating Shafts:** Must have fixed guards in place to prevent entanglement.
- **Belt Drives:** Must have barrier guards or enclosures.
- **Cutting and Grinding Equipment:** Must have transparent shields to protect against flying debris.
- **Electrical Components & Panels:** Must be locked and labeled per LOTO (Lockout/Tagout) procedures.

Safe Operating Procedures

Pre-Use Inspection:

- Ensure guards are properly attached and functional.
- Do not operate if guards are missing or damaged.
- Confirm emergency stop buttons are functional.

During Operation:

- Never bypass or remove a guard while the machine is running.
- Keep hands, clothing, and tools away from moving parts.
- Use proper PPE (e.g., gloves, safety glasses, face shields) when operating machinery.

After Use:

- Shut down and lock out equipment before performing maintenance.
- Replace all guards before resuming operation.

Training Requirements

Mandatory Training for All Affected IWS Employees

- Purpose and function of machine guards.
- Identifying machine hazards.
- Safe work practices for operating guarded equipment.
- Lockout/Tagout (LOTO) procedures related to machine guarding.

Machine guarding training is provided in the OSHA 10 Hour and 30 Hour training modules and must be repeated every three years.

Inspections & Maintenance

- Supervisors shall conduct weekly inspections of machine guards.
- Any defective guard must be reported immediately and repaired before use.
- HSEQ will perform monthly audits of machine guarding compliance at IWS facilities and project sites.

MOBILE EQUIPMENT

Integrated Water Services, Inc.
(the Company)

Purpose

The purpose of this program is to define the requirements for safely operating mobile equipment.

Scope

This policy applies to mobile equipment used on Integrated Water Services (IWS) property or used by an IWS employee.

When work is performed by a subcontractor on a company site, the contractor's written safety program shall take precedence for their employees. However, subcontractors may adopt this procedure for their use.

Key Responsibilities

Project Superintendent

- Is responsible for ensuring this procedure is followed on their respective operations.
- Is responsible for ensuring mobile equipment is secured and properly maintained while on Company projects or in Company possession.

Employees

- Shall be familiar with this procedure and the local workplace vehicle safety program.
- Follow all requirements, report unsafe conditions, and follow all requirements of this procedure.

Mobile Equipment

The following requirements apply for all Company locations:

The equipment operator of mobile equipment shall be directly responsible for the safe operation of that equipment and shall comply with all manufacturer requirements.

Equipment shall never be operated in an unsafe manner.

Maintenance records for any service, repair or modification which affects the safe performance of the equipment must be maintained and be reasonably available to the operator and maintenance personnel during work hours.

All mobile equipment shall be maintained in safe operating condition and operation, inspection, repair, maintenance, and modification shall be carried out in accordance with manufacturer's instructions or, in the absence of the instructions, in accordance with good engineering practice.

Servicing, maintenance, and repair of mobile equipment shall be done when the equipment is not in operation, except for when equipment operation is required for service as instructed by the manufacturer.

Only authorized employees shall be allowed to operate mobile equipment. Authorization to operate mobile equipment will be issued to employees qualifying under appropriate training and proficiency testing. The person

must also have in possession of an applicable operator's license and an airbrake certificate where required and be familiar with the operating instructions pertaining to the equipment and be authorized to operate the equipment.

A supervisor must not knowingly operate or permit a worker to operate mobile equipment which is or could create an undue hazard to the health or safety of any person or is in violation of these procedures or any local or federal regulations.

Mobile equipment in which the operator cannot directly or by mirror or other effective device see immediately behind the machine must have an automatic audible warning device which activates whenever the equipment controls are positioned to move the equipment in reverse, or there is a spotter directing the backward movement of the equipment. The spotter must be in eye contact with the operator.

Unauthorized personnel shall not be permitted to ride on equipment unless it is equipped to safely accommodate riders.

At the beginning of each shift, the operator shall inspect and check the equipment, reporting immediately to his/her supervisor any malfunction or defect. Faulty equipment must be tagged out until safely returned to service.

The operator shall immediately report defects and conditions affecting or likely to affect the safe operation of the equipment to his or her immediate supervisor. If an inspection identifies a defect or unsafe condition that is hazardous or may create a risk to the safety or health of a worker, the site supervisor must ensure that the powered mobile equipment is not operated until the defect is adjusted, repaired, or the unsafe condition is corrected.

The operator of mobile equipment must not leave the controls unattended unless the equipment has been secured against inadvertent movement such as by setting the parking brake, placing the transmission in the manufacturer's specified park position and by chocking wheels as necessary.

No operator shall leave a suspended load unattended unless it has been immobilized and secured against inadvertent movement.

Powered equipment shall not be left unattended unless forks, buckets, blades and similar parts are in the lowered position or solidly supported.

Before a worker starts any powered mobile equipment, they must make a complete 360-degree visual inspection of the equipment and the surrounding area to ensure it is safe to proceed.

The operator shall use the manufactured operator cabin entry and exit access provided. Do not climb over the equipment to enter the operator cabin and do not jump off the equipment.

No operator shall operate mobile equipment without the protection of an enclosed cab or approved eye protection for the type of hazards that may be encountered.

Where there is a danger to the operator of a unit of powered mobile equipment or any other worker who is required or permitted to be in or on a unit of powered mobile equipment from a falling object or projectile, the

Company requires that the powered mobile equipment is equipped with a suitable and adequate cab, screen, cage, or guard.

Mobile equipment used for lifting or hoisting or similar operations shall have a permanently affixed notation stating the safe working load capacity of the equipment and the notation must be kept legible and clearly visible to the operator.

The operator shall not use or attempt to use any vehicle in any manner or for any purpose other than for which it is designated.

The operator's manual for powered mobile equipment must be readily available to the worker who operates the equipment.

A competent person must provide tire service in accordance with the specifications of both the tire manufacturer and the manufacturer of the powered mobile equipment.

Adequate and approved fire suppression equipment shall be provided on mobile equipment.

The operator of a gasoline or diesel vehicle shall shut off the engine before filling the fuel tank and shall see that the nozzle of the filling hose makes contact with the filling neck of the tank. No one shall be on the vehicle during fuelling operations except as specifically required by design. There shall be no smoking or open flames in the immediate area during fuelling operation.

When a worker is required to work beneath elevated parts of mobile equipment including trucks, the elevated parts shall be securely blocked.

Materials and equipment being transported shall be loaded and secured in a manner to prevent movement which could create a hazard to workers or another person. This includes keeping the cab, floor, and deck of mobile equipment free of material, tools, trash, or other objects which could create a tripping hazard, interfere with the operation, controls, or be a hazard to the operator or other occupants in the event of an accident.

Where the operator of the equipment does not have a full view of the intended path of travel of the equipment, spotters shall be used to guide the operator. Spotters must be in the line of sight of the operator at all times the equipment is in motion.

Where equipment is operated near a live power line, every part of the equipment shall be kept at least the minimum distance from the live power line for the particular voltage as required by local or federal law.

Under no circumstance will a worker be directed, required, or permitted to work under or remain in the strike range of a suspended or swinging load.

MULTI-EMPLOYER WORKSITES

Integrated Water Services, Inc.
(the Company)

Purpose

This communication is provided to all Company employees and subcontractors and their employees as a means to communicate the safe planning, hazard identification, hazard remediation measures, and safety cooperation efforts required of all workers on a Company site.

It is essential that employees and subcontractors alike become familiar with the safety protocols in place at Integrated Water Services, including the location of policies and procedures, emergency action plans, emergency action plans, safe work permits, and other pertinent safety resources that are located at the safety support center www.iws.support. All personnel must adhere to the published Company safety requirements as a means to ensure safe working conditions.

If you have any questions related to your duties or safety protocols during the course of performing your employment duties at a Company worksite, please do not hesitate to reach out for assistance from your site supervisor or Company safety personnel.

Thank you for contributing to our commitment to providing safe working conditions at all times in support of our goal of zero accidents.

Scope

This program applies to all workers, employees, and contractors alike. The goal is to ensure the safety of all workers on a Company worksite.

When work is performed by a subcontractor on a company site, the contractor's written safety program shall take precedence for their employees. However, subcontractors may adopt this procedure for their use.

If you have any questions about our safety program, please do not hesitate to ask questions of your supervisor or our safety department. We are committed to creating a safe working environment for everyone involved with our company and appreciate your cooperation in helping us achieve this goal.

A Multi-Employer Worksite

Integrated Water Services recognizes that in most cases, Company controlled worksites will be multi-employer worksites. On multi-employer worksites, more than one employer is responsible for preventing and controlling hazardous conditions. The process for recognizing and understanding the role each employer plays in controlling hazardous conditions is a straightforward two-step process:

Step One. The first step is to determine whether you as an employer are a creating, exposing, correcting, or controlling employer. The definitions below explain each. Remember that an employer may have multiple roles. Once you determine your role as an employer, go to Step Two to determine your level of responsibility in controlling hazardous conditions.
Step Two. If you as an employer fall into one of these categories, you have obligations with respect to OSHA requirements. Step Two communicates your required actions to meet those obligations. The extent of the actions required of employers varies based on which category applies.

A Creating Employer

Definition: An employer whose actions or employee's actions have a potential to cause or do cause a hazardous condition.

Actions Required: Employers and employees must not create hazardous conditions in their workplace, nor should they allow hazardous conditions to persist once they have been recognized. An employer or an employee that does so is in violation even if the only employees exposed are those of other employers at the site.

An Exposing Employer

Definition: An employer whose own employees are exposed to a hazard.

Actions required: If the exposing employer creates a hazardous condition, it is in violation as a creating employer. If the hazardous condition was created by another employer, that employer is the creating employer as well as the exposing employer if it (1) knew of the hazardous condition or failed to exercise reasonable diligence to discover the condition, and (2) failed to take steps consistent with its authority to protect their employees. If the exposing employer has authority to correct the hazard, it must do so. If the exposing employer lacks the authority to correct the hazard, it is still in violation if it fails to do each of the following: (1) ask the creating employer to correct the hazard; (2) inform its employees of the hazard; and (3) take reasonable alternative protective measures. In certain circumstances (e.g., imminent danger situations), the exposing employer is also in violation for failing to remove its employees from the job exposure to avoid the hazard. In summary, don't allow your workers to be exposed to a hazardous condition and if the creating employer won't resolve the hazardous condition, the employees must be moved away from the hazard.

A Correcting Employer

Definition: An employer who is engaged in a common undertaking, on the same worksite as the exposing employer and is responsible for correcting a hazard. This usually occurs where an employer is given the responsibility of installing and/or maintaining safety and/or health equipment, devices, or PPE.

Actions required: The correcting employer must exercise reasonable care in discovering and preventing the hazards and meet its obligations of correcting known or assumed hazards.

A Controlling Employer

Definition: An employer who has general supervisory authority over the worksite, including the power to correct safety and health violations itself or require others to correct them. Control can be established by contract or, in the absence of explicit contractual provisions, by the exercise of control in practice.

Actions required: A controlling employer must exercise reasonable care to prevent and detect violations on the site they control. The extent of the measures that a controlling employer must implement to satisfy the duty of reasonable care is less than what is required of an employer with

respect to protecting its own employees. This means that the controlling employer is not normally required to inspect for hazards as frequently or to have the same level of knowledge of the applicable standards or of trade expertise as the employer it has hired as a subcontractor.

Factors Relating to Reasonable Care: Factors that affect how frequently and closely an employer must inspect to meet its standard of reasonable care include:

- The scale of the project.
- The nature and pace of the work, including the frequency with which the number or types of hazards change as the work progresses.
- How much the controlling employer knows both about the safety history and safety practices of the employer it controls and about that employer's level of expertise.
- More frequent inspections are normally needed if the controlling employer knows that the other employer has a history of non-compliance. Greater inspection frequency may also be needed, especially at the beginning of the project, if the controlling employer has never before worked with this other employer and does not know its compliance history.
- Less frequent inspections may be appropriate where the controlling employer sees strong indications that the other employer has implemented effective safety and health efforts. The most important indicator of an effective safety and health effort by the other employer is a consistently high level of compliance. Other indicators include the use of an effective, graduated system of enforcement for non-compliance with safety and health requirements coupled with regular jobsite safety meetings and safety training.

Evaluating Reasonable Care: In order for an employer to exercise reasonable care in preventing and discovering violations, the employer should:

- Conduct periodic inspections of appropriate frequency (frequency should be based on the factors listed above).
- Implement an effective system for promptly correcting hazards.
- Communicate other employer's noncompliance with safety and health requirements with an effective, graduated system of communication and follow-up inspections.

Conclusion

Integrated Water Services' Corporate Health and Safety Policy is built on a foundation of core beliefs that guide our actions and decisions. We firmly believe that environmental, health, and safety (EHS) performance must always take priority over other business or client demands. We are committed to embedding concern for employee health and safety into every aspect of our work, from the design phase to the decisions we make.

We empower each employee with personal responsibility for their own safety, as well as the safety of their colleagues and subcontractors. Continuous improvement is at the heart of our EHS culture, and we rely on feedback and experience to refine and enhance our approach to safety, ensuring that we are always moving forward. But when it comes to safety, we are never satisfied, constantly seeking new and innovative ways to reduce safety incidents through focusing on "leading indicators," proactively avoiding incidences BEFORE they happen, rather than measuring performance on "lagging safety indicators" AFTER the fact.

At Integrated Water Services, we believe that EHS incidents are preventable, and we are proactive in our policies, practices, and decision-making to minimize risks. Worksite employers are responsible for ensuring that their employees have the necessary knowledge, skills, and equipment to protect themselves and others. We hold ourselves to a higher standard than mere compliance with regulations and strive for excellence in all areas of our business.

We recognize that every task we undertake has an impact on the welfare of our employees, contractors, visitors, clients, and the communities in which we operate. As such, we are committed to protecting the well-being of our employees around the clock, both on and off the job. At Integrated Water Services, we believe that a strong EHS culture is essential to achieving our business objectives and delivering value to our clients, while ensuring the safety and well-being of our employees.

PERSONAL PROTECTIVE EQUIPMENT (PPE)

Integrated Water Services, Inc.
(the Company)

Purpose

The purpose of the Personal Protective Equipment (PPE) Program is to set forth the procedures for the use, care, and maintenance of personal protective equipment required to be used by employees and contractors of Integrated Water Services for the prevention of injuries.

Key Responsibilities

Safety Director

- Provide an inventory of PPE available for ready access by employees.
- Assists managers in assuring all PPE meets regulatory requirements.
- Ensures a certified PPE hazard assessment is completed. The hazard assessment must indicate a determination if hazards are present or are likely to be present, which necessitate the use of PPE. The certifier's name, signature, date(s) should be present on the assessment documents. Sources of hazards include but are not limited to: hazards from impact/motion, high/low temperatures, chemicals, materials, radiation, falling objects, sharp objects, rolling or pinching objects, electrical hazards, and workplace layout. Certifies in writing the tasks evaluated, hazards found, and PPE required to protect employees and contractors against hazards and ensures exposed employees and contractors are made aware of hazards and required PPE before they are assigned to the hazardous task.

Managers and Supervisors

- Assists in the selection of appropriate PPE. If a task exposes an employee to hazards which cannot be eliminated through engineering or administrative controls, the Managers and Supervisors will work together to identify and select PPE suitable for the specific task performed, conditions present, and frequency and duration of exposure. Employees need to give feedback to management about the fit, comfort, and suitability of the PPE being provided.
- Supervisors and managers shall regularly monitor employees and contractors for correct use and care of PPE and make sure training is completed to ensure each employee and/or contractor has adequate skill, knowledge, and ability to use PPE.
- Supervisors and managers shall enforce PPE safety rules as outlined in this procedure.

Employees

- Complying with the correct use and care of PPE.
- Reporting changes in exposure to hazardous conditions that might require a follow-up assessment of the task for PPE.
- Reporting and replacing defective or damaged PPE, which shall not be used.
- Understand that the use of the required PPE is a condition of employment.

Procedure

General

Protective equipment, including personal protective equipment for eyes, face, head, and extremities, protective clothing, respiratory devices, and protective shields and barriers, must be provided, used and maintained in a sanitary and reliable condition.

Integrated Water Services is responsible for employee-owned equipment and contractors are responsible for contractor owned equipment. Where employees provide their own protective equipment, Integrated Water Services must assure its adequacy, including proper maintenance and sanitation of such equipment.

Integrated Water Services does not provide safety footwear, hardhats or any other PPE to contractors.

All PPE issued to the employees shall be issued at no cost as required by federal regulation.

Personal Protective Equipment

Eye Protection
Employees and contractors must use appropriate eye or face protection when exposed to eye or face hazards from flying particles, molten metal, liquid chemicals, acids or caustic liquids or chemical gases or vapors. Eye and Face PPE must comply with ANSI Standard Z87.1-2003 (Z87+), *Occupational and Educational Personal Eye and Face Protective Devices.*

Safety Glasses
Safety glasses, with side shields, that meet ANSI Z-87.1-2003 standards with "high Impact lenses" are required to be worn by all employees, contractors, contractors, and visitors while on Integrated Water Services owned or controlled property, at all times, as described below:

- At field locations, in shops and warehouses, except in approved, designated, striped safety zones.
- In all yard work zones or by everyone when in the vicinity of loading or unloading equipment, performing mechanic or maintenance work, test stand operations, operating equipment such as forklifts, welding, or any type of work which has the potential to inflict an eye injury.
- In any office, restroom, or any other building while performing any type of work where a potential eye injury may be present.
- Visitors will be provided with visitor glasses. In the absence of approved prescription safety glasses, "Over the glass" type safety glasses or goggles, must be worn over the nonsafety glasses until approved prescription safety glasses are obtained.
- Workers assisting welders must wear absorbent safety glasses that protect the wearer from ultra-violet (UV) and/or infrared rays (IR).
- Dark shaded lens (sunglasses) darker than a # 1 shade is prohibited to be worn indoors unless welding or assisting a welder.
- A doctor must support "exceptions for medical reasons" in writing to exempt safety eyewear requirements.
- Safety glasses are not required:
    - Inside offices.
    - Inside vehicles.
    - Parking lots when traveling from vehicles to and from trailers or buildings that do not pass through active work areas.

Goggles
- Chemical splash proof goggles shall be worn when handling or mixing liquid chemicals, solvents, paints, corrosives etc., and/or as recommended on the Safety Data Sheet of the material being handled.

- Dust proof goggles shall be worn when using air to clean equipment or while performing other jobs where safety glasses are not adequate to prevent airborne particles from entering the openings around the lenses and side shields. This includes windstorms and sandstorms.

Face Shields

- Full face shields shall be worn over safety glasses when operating handheld or stationery grinders with abrasive or wire wheels, while chipping paint or concrete or, performing jobs where there is the potential for flying objects striking the face and safety glasses or goggles would not provide adequate protection.

Head Protection

Employees must wear hardhats when working in areas where there is a potential for injury to the head from impact events. Helmets must comply with ANSI Standard Z89.1-1997 Class E, *American National Standard for Industrial Head Protection* for Type II head protection or be equally effective.

- Employees must wear hardhats when working in areas where there is a potential for injury to the head from falling objects.
- Hardhats will not be altered in any way.
- Do not paint hardhats.
- Do not drill, cut, bend, or apply heat.
- Hardhats will be inspected by the employee or contractor regularly for cracks, chips, scratches, signs of heat exposure (sun cracks), etc.
- Defective hardhats will be replaced immediately.
- Hardhats must be made available to visitors.
- Employees will be trained in the use, care, and maintenance of head protection equipment.

Hearing Protection

Hearing protection is required to be worn by all employees, contractors, and visitors while in posted "High Noise" areas.

Warning signs will be posted in areas known or suspected to have noise levels exceeding 85 dBA over an 8-hour time weighted average, or where impulse noise exceeds 130dBA at any point.

When signs are not posted, employees and contractors shall wear hearing protection when noise caused by machinery, tools, etc., prevents normal conversations from being heard clearly.

Rule of thumb: If you must yell to be heard, hearing protection is required.

Types of protection

- Molded Inserts (ear plugs)
- Canal Caps (head band type)
- Headband or hard hat mounted earmuffs and/or earplugs shall be provided to employees in sizes and configurations that will be comfortable to the employee.

Care and Maintenance

- Inspect hearing protection prior to each use.
- Hearing protection must be kept clean to prevent ear infections.
- If earplugs are of disposable type, they must be discarded when they become dirty, greasy, or cracked.

- Earmuffs that have deteriorated foam inserts, cracked seals or are defective must be replaced.

Fit

- Due to individual differences, not everyone can wear the same type of hearing protection. A variety of styles may have to be tried before one is found to be comfortable and provide adequate protection.
- Employees shall be instructed how to obtain the proper fit.

Hand Protection

Gloves

- Gloves are required to be worn when performing work which may expose the hands to extreme temperatures, cuts and abrasions, or exposure to chemicals.
- Welding gloves made of leather or other heat resistant materials shall be worn when performing arc welding or oxy/gas cutting.
- Impervious (chemical resistant) gloves shall be worn when handling chemicals that specify gloves as personal protection equipment when handling.
- Refer to the specific chemical's Safety Data Sheet for the correct glove type.
- Persons assigned to working with chemicals, i.e., solvent vats, shall be issued their own individual gloves for hygiene purposes.
- Leather gloves should be worn when working with sharp materials or when handling rigging equipment.
- Cloth gloves should be worn when handling objects or materials, which could cause blisters, splinters, cuts, etc.
- Heat resistant gloves shall be worn when handling hot materials or objects that have been heated beyond ambient temperatures.
- Insulated gloves shall be worn to prevent frostbite in extreme cold climates.
- Glove Inspections
    - Gloves shall be inspected before each use for holes, tears, and worn areas.
    - Chemical gloves shall be periodically air tested for pinholes by twisting the cuff tightly, apply low air pressure to expand the glove, and then submersing in water to check for bubbles.
    - Defective gloves shall be discarded immediately. Exception: machinists are exempted from wearing gloves while working with rotating machinery.

Foot Protection

Safety footwear shall be worn by all employees and visitors upon entering the worksite.

- In adherence to OSHA regulations, all personnel engaged in construction activities must wear appropriate safety shoes at all times while on site. Safety shoes must meet ANSI Z41 standards and provide protection against potential hazards such as falling objects, punctures, and electrical hazards. Before commencing work, employees are required to inspect their safety shoes for any signs of damage or wear and promptly report any issues to their supervisor. Furthermore, employees must ensure that their safety shoes are properly fitted and laced to provide maximum protection and support throughout their shift.

Fall Protection

Personal fall protection is required when performing certain elevated jobs in excess of four feet for construction work and six feet in general industry work. Consult the Integrated Water Services Fall Protection Program for more instruction on Fall Protection.

Electrical Protection
Consult the Integrated Water Services Electrical Safety Procedure.

Proper Fitting or Sizing of PPE
Consideration must be given to comfort and fit. PPE that fits poorly will not afford the necessary protection. Continued wearing of the PPE is more likely if it fits the wearer comfortably. PPE is generally available in a variety of sizes. Care should be taken to ensure that the right size is selected.

Defective Equipment
If PPE is defective, it should be repaired or replaced. If the equipment is not repairable, it shall be discarded and disposed of.

Training on the Use of PPE

Training shall be provided to employees and contractors concerning when to wear PPE, what PPE should be worn, how to put on and take off and adjust PPE. The limitations of the PPE and its use, care, and maintenance should also be included in the training.

Retraining on the Use of PPE
Each affected employee and/or contractor must demonstrate an understanding of training received and the ability to use PPE properly. When there is a reason to believe that any employee or contractor who has been trained does not have the required understanding and skill or there are changes in the workplace, the employee or contractor must be retrained.

PPE Training is Documented
Training is documented and records are maintained through the online support center document management system. The training certification shall include:

- Name of instructor that provided the training
- Name of employee(s) or contractor(s) trained
- The dates of training, and
- The training content

INTEGRATED WATER SERVICES

PPE Matrix For: Integrated Water Services, Inc. **Location: All locations**

D Depends on situation	**M** Mandatory	**N** Not Mandatory unless hazards become present

This PPE Assessment is subject to change if equipment, conditions, or risk exposures change!

			Operation					
EQUIPMENT	**HAZARD**	**INSPECTION**	Field Services/Const	Deliveries/ Visitors	Shop Work	Driving	Office	Winter Conditions
Hard Hat (Class G or E Only)	Striking Head or Falling Objects	Each use	-	-	D	-	-	-
Safety Glasses w/shields	Objects Striking Eyes	Each use	D	D	M	-	-	M
Impact Vented Goggles	Small Particles in Eyes	Each use	-	-	D	-	-	D
Chemical Splash Goggles	Chemicals or Oil in Eyes	Each use	D	D	D	-	-	-
Disposable Earplugs	Damage to Hearing (85 dB)	Each use	D	D	D	-	-	-
Ear Muffs (w/Disposables)	Damage to Hearing (105 dB)	Each use	D	D	D	-	-	-
Cold Weather Clothing	Cold Temperature	Each use	D	D	D	D	-	D
Rainwear	Wet body	Each use	-	-	D	-	-	-
Protective Sleeves	Biohazardous materials	Each use	-	M	-	-	-	-
Slip Resistant Footwear	Injury to Body	Each use	M	M	M	-	-	-
Anti-Slip Cleats during Winter	Injury to Body	Each use	M	M	M	-	-	D
Anti-cut Gloves	Cuts	Each use	M	D	M	-	-	-
Vinyl Disposable Gloves	Biohazardous materials	Each use	-	M	-	-	-	-
Heavy Duty Gloves	Injuries to Hands	Each use	-	-	M	-	-	-
Cold weather Gloves	Environmental Exposure	Each use	-	-	-	-	-	M
Rubber Gloves	Hot Water Burns	Each use	M	-	-	-	-	-

PRESSURE TESTING

Integrated Water Services, Inc.
(the Company)

Purpose

The purpose of these procedures is to ensure that pressure tests are conducted safely and effectively. They cover pressure testing of new and existing pressure systems and components.

Scope

This procedure applies to all Company employees and subcontractors.

These procedures represent the minimum requirements as per ASME B31.3. It must be understood that although these requirements represent the minimal testing requirements, the customer/client or contract may have more stringent testing requirements.

Procedures

Pressure tests are performed to ensure the safety, reliability, and leak tightness of pressure systems. A pressure test is required for a new pressure system before use or an existing pressure system after repair or alteration.

There are two methods for pressure tests: hydrostatic and pneumatic. A hydrostatic test is performed by using water as the test medium, whereas a pneumatic test uses air, nitrogen, or any non-flammable and non-toxic gas.

All pressure tests are to be conducted using a gauge that has been calibrated within the previous 12 months. The pressure gauge should be sized so that the test pressure is in the middle third of the gauge's pressure range. Gauge materials and fluids are to be compatible with the test fluid.

When possible, the use of blind/blank flanges or caps should be considered for test boundaries to prevent damage to valves.

Pressure tests must always be performed under controlled conditions, following an approved test plan, and documented in a test record. A single approved test plan may be used for several similar tests, but a separate test record is required for each.

Codes and standards organizations (ASME, NFPA) and federal and state regulations specify test pressures and procedures applicable to various systems. The test pressure for a piping system is based on the maximum design pressure of the system, and for a pressure vessel based on the maximum allowable working pressure (MAWP) of the vessel. Systems undergoing retesting should not be tested at pressures higher than the original testing pressure.

Piping system preparation for hydro tests and pneumatic tests

Before starting leakage tests like hydrostatic testing or pneumatic testing, piping network and connected equipments must be prepared for leakage tests. ASME B31.3 provides guidelines for such preparation.

Piping which is normally open to the atmosphere, such as drains, vents, discharge piping from pressure relieving devices, sewers, and stack downstream of the seal drum, shall not be subjected to the piping test pressure.

Compare PID and Isometric Drawing
A comparison of the P&ID drawings and the piping isometrics must be made to determine if there are any discrepancies. Review all valve types, flow directions, branch tie-ins, and any material changes. Recheck all in-line components to verify they can withstand the required test pressure.

Complete Inspection before testing
All radiographic and ultrasonic inspections should be carried out before the pressure test is started. Conducting 100% radiography of all the weld joints assure that your weld joints are defect free but can never provide you with the assurance of mechanical integrity of a system. This is also to be noted that radiography / ultrasonic inspection shall also not to be waived off if the pipeline is to be hydrostatically tested.

Provision of Temporary Supports
As per ASME B31.3 Section 345.3.2 piping designed for vapor or gas shall be provided with additional temporary supports, if necessary, to support the weight of test liquid as the test liquid is heavier than service gas.

Spring Supports in Piping System
Spring supports shall be restrained or removed during hydrostatic testing. Piping which is spring or counterweight supported shall be blocked up temporarily to a degree sufficient to sustain the weight of the test medium. Holding pins shall not be removed from spring supports until testing is completed and the system is drained. Care shall be taken to avoid overloading any parts of the supporting structures during hydrostatic testing.

Piping with Expansion Joints
As per ASME B31.3 Section, when there is an expansion joint in piping system under leakage test, following criteria applies.

(a) An expansion joint that depends on external main anchors to restrain pressure end load shall be tested in place in the piping system.
(b) A self-restrained expansion joint previously shop tested by the manufacturer [see Appendix X, para. X302.2.3(a)] may be excluded from the system under test, except that such expansion joints shall be installed in the system when a sensitive leak test in accordance with para. 345.8 is required.
(c) A piping system containing expansion joints shall be leak tested without temporary joint or anchor restraint at the lesser of:
    (1) 150 % of design pressure for a bellows-type expansion joint, or
    (2) the system test pressure is determined in accordance with para. 345

In no case shall a bellows-type expansion joint be subjected to a test pressure greater than the manufacturer's test pressure.

(d) When a system leak tests at a pressure greater than the minimum test pressure specified in (c), or greater than 150% of the design pressure within the limitations of para. 345.2.1(a) is required, bellows-type expansion joints shall be removed from the piping system or temporary restraints shall be added to limit main anchor loads if necessary.

Limits of Tested Piping
As per ASME B31.3 Section 345.3.4 equipment which is not to be tested shall be either disconnected from the piping or isolated by blinds or other means during the test. A valve may be used provided the valve (including its closure mechanism) is suitable for the test pressure.

Rotary Machinery

For rotating machinery, such as pumps, turbines, and compressors, have lube and seal oil systems which could be impaired by the presence of water. These systems shall not be subject to the piping test pressure.

Temporary Spades and Blanks
Temporary spades and blanks installed for testing purposes shall be designed to withstand the test pressure without distortion. The presence of spades shall be clearly visible during testing. The recommended practice is to use standard blind flanges as per ASME B16.5 or B16.47 and spades acc. to ASME B16.48.

Check Valves
Check Valves shall have the flap or piston removed for testing, where pressure cannot be located on the upstream side of the valve. The locking device of the flap pivot pin shall be reinstated together with the flap and a new cover gasket shall be installed after completion of the test.

Completion of Hot Work
A hydrostatic test should not be performed until after all hot works have been completed on a certain piping system. Hot work includes everything related to welding or the post weld heat treatment (PWHT).

Installation of Barriers
Prior to any pressurization related to testing, it is essential to install barriers around the piping system under test. Under no circumstances should anyone other than an authorized person be allowed within the safety barriers.

Control Valves
Control Valves and soft-seal block Valves shall be removed from the piping prior to the test and replaced with pipe spools.

Physical Inspection
Complete a physical inspection to check for following:

- Completed and torqued flanges with no missing bolts or gaskets.
- All gravity supports installed.
- Proper pipe routing.
- Correct valve type and orientation.
- Vents and drains installed to allow proper filling and draining
- Proper material type verified using color codes or markings, and heat numbers recorded if required by the codes.
- All required piping stress relief, weld examinations, and welding documentation completed and acceptable.

Testing Documentation
The individual system documentation i.e., test pack shall be available prior to any testing and shall include information such as test limits, test pressure, test medium, duration, test blinds, blind flanges, vents, and drains.

Pressure Test Data Sheet
The use of marked up P&Ids coupled with isolation registers should be utilized to identify the locations of blinds, Valves, vents, and drains.

Testing Equipment
Testing equipment such as pumps, manifold, pressure and temperature recorders, pressure gauges should be within calibration/certification (as per owner and PEM procedures) and connected to the lowest convenient connection within the system to ensure best results.

Hydrostatic Testing of Water Pipelines

Hydrostatic testing is the most used leakage checking method for piping networks. ASME B31.3 Process piping code specifies criteria for hydrotesting in a process industry.

Test Fluid

As per ASME B31.3 Section 345.4.1, the test fluid shall be water unless there is the possibility of damage due to freezing or if water will cause adverse effect on the piping or the process. In that case another suitable nontoxic liquid may be used. If the used test liquid is flammable, its flash point shall be at least 49°C (120°F), and consideration shall be given to the test environment.

Test Pressure

As per ASME B31.3 Section 345.4.2 the hydrostatic test pressure at any point in a metallic piping system shall be as follows:

(a) not less than 11⁄2 times the design pressure.
(b) for design temperature above the test temperature, the minimum test pressure shall be calculated by Eq. (24), except that the value of ST/S shall not exceed 6.5:

$$P_T = \frac{1.5\times{P}\times{S_T}}{S}$$

Where

P = internal design gauge pressure.
PT = minimum test gauge pressure.
S = stress value at design temperature (see Table A-1 of B31.3)
ST = stress value at test temperature.

If the test pressure as defined above would produce a nominal pressure stress or longitudinal stress in excess of the yield strength at test temperature, the test pressure may be reduced to the maximum pressure that will not exceed the yield strength at test temperature.

Hydrostatic test of piping with vessels as a system

As per ASME B31.3 Section 345.4.3 where the test pressure of piping attached to a vessel is the same as or less than the test pressure for the vessel, the piping may be tested with the vessel at the piping test pressure.

Where the test pressure of the piping exceeds the vessel test pressure, and it is not considered practicable to isolate the piping from the vessel, the piping and the vessel may be tested together at the vessel test pressure, provided the owner approves and the vessel test pressure is not less than 77% of the piping test pressure calculated in accordance with para. 345.4.2(b).

Safety Considerations

Prior to testing a Job Hazard Assessment (JHA) must be completed and reviewed with all affected personnel. The JHA must cover the following:

- Job tasks associated with the testing

- Hazards associated with the tasks
- Controls that will be implemented to remediate the hazards
- All workers have an obligation to stop work if something is not right.

After the JHA has been submitted, if there are changes to the job scope, the JHA must be edited and updated in order to accommodate the following:

- Changes to the testing plan
- Changes to the job tasks
- Changing hazards associated with the tasks
- Changing controls and hazard mitigation measures
- Changes in personnel and or tools
- Any other changes or shifting conditions associated with the testing process

The following table includes some of the mitigation and control measures that must be incorporated with any testing Job Hazard Assessment for Hydrostatic or Pneumatic Testing:

Job Tasks/ Equipment	Hazards	Controls & Mitigations
1. Hydrostatic Pipe Testing. **Equipment:** • First-aid kit • Equipment and operations manual for equipment • Compressed air • Pressurized water • Hand tools • Personal protective equipment	1. Caught in or between moving parts.	1. Identify and understand parts of equipment which may cause crushing, pinching, rotating or similar motions • Provide and use proper work gloves when the possibility of pinching, or other injury may be caused by moving/ handling large or heavy objects • Maintain all equipment in a safe condition • Keep all guards in place during use • De-energize and lock-out machinery before maintenance or service
	1a. Slips, trips and falls	1a. Clear walkways work areas of equipment, tools, vegetation, excavated material and debris • Mark, identify, or barricade other obstructions • Maintain 3-point contact when ascending/descending ladders/ mounting/dismounting from heavy equipment • Halt exterior work in high winds, lightning, severe weather • The laser beam must never be directed at employees.
	1b. Handling heavy objects	1b. Observe proper lifting techniques • Obey sensible lifting limits (60 lb. maximum per person manual lifting) • Use mechanical lifting equipment (hand carts, trucks) to move large, awkward loads
	1c. Eye Injuries	1c. Wear face shield, goggles when operating powered clearing / grubbing equipment
	1d. Sharp objects	1d. Wear cut resistant work gloves when the possibility of lacerations or other injury may be caused by sharp edges or objects • Maintain all hand and power tools in a safe condition • Keep guards in place during use

		• Close doors, windows on heavy equipment to prevent injuries from tree branches and other vegetation
	1e. Contact with pressurized water	1e. Provide workers with proper skin and eye protection based on the hazards present • Review hazardous properties of any site contaminants with workers before operations begin
	1f. Pressurized lines	1f. Prepare written test procedure checklist • Place test in progress or similar signs / appropriate barriers to prevent access by unauthorized personnel to the testing area • All changes to test procedures must be approved by qualified engineer • Inspect testing equipment for defects prior to each use • Maintain an appropriate pressure release system to safely release pressures when testing is complete • Wire quick connections, temporary lines closed before operating
	1i. High/Low ambient temperatures	1i. Monitor for Heat/Cold stress • Provide fluids to prevent worker dehydration • Establish work/rest cycles for the crew
	1j. Other precautions	1j. Inspect Equipment and Tools • Inspect equipment and tools daily per manufacturers requirements and document the same using the IWS inspection forms • Inspect all emergency equipment (i.e. first aid kits, fire extinguishers)

Pneumatic Testing of Piping Systems

Pneumatic testing is used where hydrostatic testing cannot be used e.g., when residual water can damage the piping system.

Pneumatic Testing as per ASME B31.3

345.5.1 Precautions.
Pneumatic testing involves the hazard of released energy stored in compressed gas. Particular care must therefore be taken to minimize the chance of brittle failure during a pneumatic leak test. Test temperature is important in this regard and must be considered when the designer chooses the material of construction. See para. 345.2.2(c) and Appendix F, paras. F323.4 and F345.5.1.

345.5.2 Pressure Relief Device.
A pressure relief device shall be provided, having a set pressure not higher than the test pressure plus the lesser of 345 kPa (50 psi) or 10% of the test pressure.

345.5.3 Test Fluid.
The gas used as test fluid, if not air, shall be nonflammable and nontoxic.

345.5.4 Test Pressure.
The test pressure shall be not less than 1.1 times the design pressure and shall not exceed the lesser of:

(a) 1.33 times the design pressure
(b) the pressure that would produce a circumferential pressure or longitudinal stress (based on minimum pipe wall thickness) in excess of 90% of the yield strength of any component at the test temperature

345.5.5 Procedure.
The pressure shall be gradually increased until a gage pressure that is the lesser of one half the test pressure or 170 kPa (25 psi) is attained, at which time a preliminary check shall be made, including examination of joints in accordance with para. 341.4.1(a). Thereafter, the pressure shall be gradually increased in steps until the test pressure is reached, holding the pressure at each step long enough to equalize piping strains. The pressure shall then be reduced to the design pressure before examining for leakage in accordance with para. 345.2.2(a).

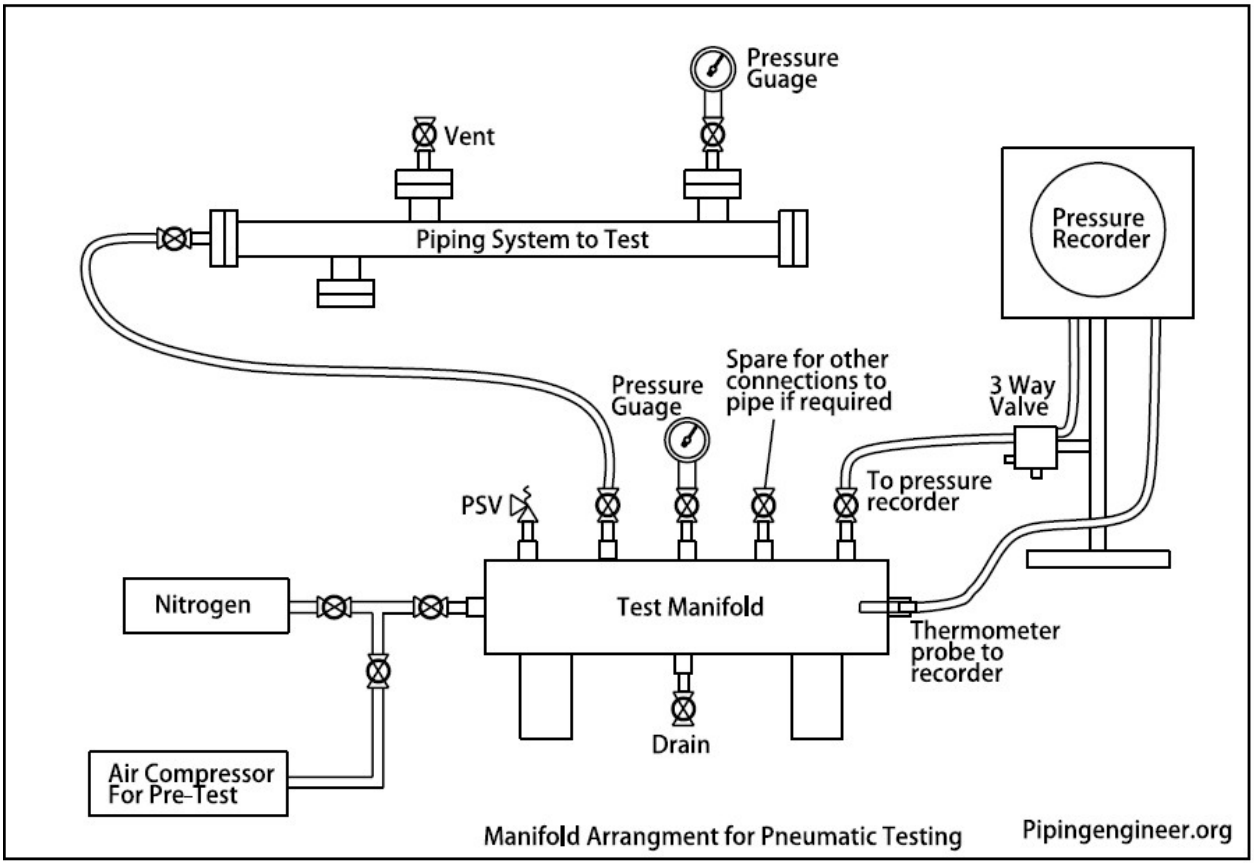

Blank Pneumatic Testing Manifold Arrangement

Salient Features of Pneumatic Testing

- Pneumatic testing pressure is normally 10% higher than the design pressure of a piping system.

- Pneumatic testing is recommended only for low pressure applications.
- Test media (Air) used is compressible by pressure application.
- The energy stored per unit volume of compressed air under test pressure is very high.
- Easy to clean equipment and pipelines after pneumatic testing.
- Pressure relief devices are a must during tests to ensure no over pressurization.
- Chances of equipment/ Pipe / test apparatus failures are very high in pneumatic testing.
- Weight of equipment with test medium as air is comparatively less.
- Before pneumatic testing, it is highly essential to carefully check all welded joints.
- Pneumatic testing needs supervision and guidance of senior experienced staff.
- When doing pneumatic testing of pipelines, they should be tested on small segments of pipeline at a time.
- Damages caused by failures in pneumatic testing are generally extensive.
- Pneumatic testing needs special attention and safety precautions.

Difficulties with Pneumatic testing:

- Pneumatic tests are potentially more dangerous than hydrostatic tests because of the higher level of potential energy stored during compressing the gas.
- Care must be exercised to minimize the chance of brittle failure during testing by initially assuring the system is suitable for pneumatic testing.
- Pneumatic tests could be performed only when at least one of the following conditions exists:
- When the systems are designed in such a way that it cannot be filled with water.
- When the systems are such that it is to be used in services where traces of the testing medium cannot be tolerated.

Note: Using a pneumatic test instead of hydrostatic requires approval from proper authority or body.

RESPIRATORY PROTECTION

Integrated Water Services, Inc.
(the Company)

Purpose

This procedure is designed meet or exceed all federal and State Respiratory Protection Standards. Integrated Water Services, Inc. will first attempt to engineer atmospheric hazards out of a company owned or operated work environment. If engineering control measures are not feasible or during emergency situations with high exposure, respirators shall be provided to employees which are applicable and suitable for the known or assumed atmospheric hazards. Integrated Water Services contractors are responsible for providing their own respiratory protection PPE and equipment.

Scope

This program applies to all Company employees.

When work is performed by a subcontractor on a company site, the contractor's written safety program shall take precedence for their employees. However, subcontractors may adopt this procedure for their use.

Respiratory Program Administrator

The Safety Director has been designated as the program administrator in order to ensure that specific requirements are met and followed.

The Administrator must be knowledgeable of the complexity of the program, able to conduct evaluations, and have the proper training.

This assignment is made, however, with the understanding that individual supervisors must implement and enforce major portions of the program, and independent contractors shall implement and enforce all portions of their own program. It is understood that the Program Administrator will report performance problems to the appropriate manager for resolution.

The responsibilities of the Program Administrator will include, but are not limited to:

- Conducting an annual written evaluation of the program. The program evaluation should be completed no later than December 31st of each year.
- Ensuring an adequate supply of respirators, cartridges, and repair/replacement parts are available to employees, and contractors must do the same. Although the Program Administrator may delegate this duty, he/she will retain overall responsibility of the program.
- Respiratory protective equipment must be selected based on respiratory hazards. Hazards must be identified, and NIOSH certified respirators must be selected and provided based on those hazards and factors affecting performance.
- Ensuring that all respirator users have been trained in the use, selection, and limitations of the type of respirators they will be using prior to the first time the respirator must be used. While the duty of conducting the training may be delegated, the Program Administrator retains final responsibility for seeing that all employees are appropriately trained.
- Ensuring that all respirator users have been medically evaluated and found fit to use the type of respirators that will be required in their job. The medical evaluation must be completed before an employee can use a respirator.

- Ensuring that all respirator users are fit-tested at least annually and more often if equipment or facial shape changes.
- It is required that respirators are cleaned and sanitized after each individual use and respirators are stored in a clean and accessible location. Although this duty may also be delegated, the Program Administrator retains final responsibility for seeing it through.
- It is required that respirators are selected based on the hazard that will be encountered. In special circumstances, the Program Administrator will contact the client for guidance in selecting the correct respirator.
- Employee exposure will be monitored to assure correct respirator type is used. Exposure monitoring may be delegated to others.
- It is required that an employee must leave an area if a vapor/gas breakthrough occurs, changes in breathing resistance occurs, and/or leakage of the facepiece occur.
- Ensuring that the elements of the Respiratory Protection Program for the selection, use, cleaning/maintenance, storage and fit-testing of respirators are followed.
- Ensuring that respirator parts are not exchanged between brands of respirators.
- Ensuring medical evaluations, respirators and required training are provided at no cost to the employee.

Medical Evaluation Requirements

General

General requirement responsibilities apply to Integrated Water Services employees and contractors separately. Because contractors are not employees of the company, they are responsible for and must manage their own respiratory protection program.

A medical evaluation must be completed before a worker can use a respirator. The medical evaluation must be confidential, during normal working hours, convenient, understandable, and the employee should be allowed to discuss the results with the PLHCP.

The employer may discontinue an employee's medical evaluations when the employee is no longer required to use a respirator.

Medical Evaluation Procedures

Under guideline parameters required by federal regulation, the employer shall identify a physician or other licensed health care professional (PLHCP) to perform medical evaluations using a medical questionnaire or an initial medical examination that obtains the same information as the medical questionnaire. The medical evaluation shall obtain the information requested by the Medical Questionnaire (or equivalent).

The medical evaluation prior to fit-testing will be confidential, conducted during normal working hours, be at a convenient time and location, be understandable, and the employee will be given a chance to discuss the results with the PLHCP.

Supplemental Information for the PLHCP

The following information must be provided to the PLHCP before the PLHCP makes a recommendation concerning an employee's ability to use a respirator:

- The type and weight of the respirator to be used by the employee.

- The duration and frequency of respirator use (including use for rescue and escape).
- The expected physical work effort.
- Additional protective clothing and equipment to be worn, and
- Temperature and humidity extremes that may be encountered.

The employer shall provide the PLHCP with a copy of the employers Respiratory Protection Program.

Note: When the employer replaces a PLHCP, the employer must ensure that the new PLHCP obtains this information, either by providing the documents directly to the PLHCP or having the documents transferred from the former PLHCP to the new PLHCP. However, OSHA does not expect employers to have employees medically re-evaluated solely because a new PLHCP has been selected.

Medical Determination
In determining the employee's ability to use a respirator, the company shall obtain a written recommendation regarding the employee's ability to use the respirator from the PLHCP. The recommendation shall provide only the following information:

- Any limitations on respirator use related to the medical condition of the employee, or relating to the workplace conditions in which the respirator will be used, including whether or not the employee is medically able to use the respirator.
- The need, if any, for follow-up medical evaluations, and
- A statement that the PLHCP has provided the employee with a copy of the PLHCP's written recommendation.

All recommendations are to be sent to the employers Safety Manager.

Additional Medical Evaluations
At a minimum, the employer shall provide additional medical evaluations that comply with the requirements of this program if:

- An employee reports medical signs or symptoms that are related to ability to use a respirator.
- A PLHCP, supervisor, or the respirator Program Administrator informs the employer that an employee needs to be re-evaluated.
- Information from the respiratory protection program, including observations made during fit testing and program evaluation, indicates a need for employee re-evaluation, or
- A change occurs in workplace conditions (e.g., physical work effort, protective clothing, and temperature) that may result in a substantial increase in the physiological burden placed on an employee.

Work Site Procedures

Each work site where respirators are required to protect the health of the worker shall have work site procedures that follow the guidelines of this program. Specific procedures may also be required by our client which will be followed. The following areas shall be included:

- Identification of specific hazard requiring respiratory protection

- The selection of the appropriate respiratory protection equipment based on the specific hazard and concentration levels, characteristics, etc. Specific brand and models of respiratory equipment to be used shall be identified in the procedures.
- Verification that each user of respiratory protection is qualified (medical approval, current fit test, annual training and demonstrates competency.

Respirator Selection Criteria

The employer provides respiratory equipment to employees. Respiratory equipment must be provided to employees at no cost to them.

The selection of the respiratory equipment is based on the hazards the employee is exposed to. The employer shall:

- Perform hazard identification,
- Select and provide respirators based on those hazards and factors affecting performance,
- Establish brands and models to be used, and
- Estimate exposures and contaminant information.

Hazard Identification
Due to the many varied work locations the employer's identification of respiratory hazards will be contained in the various work site specific safety plans. However, common respiratory hazards that will be encountered include:

- Dust
- Fumes
- Gases
- Chemical particles
- Oxygen Deficiency

Characteristics of Hazardous Operation or Process

- Hot operations: welding, chemical reactions, soldering, melting, melding and burning.
- Liquid operations: painting, degreasing, dipping, spraying, brushing, coating, etching, cleaning, pickling, plating, mixing, galvanizing and chemical reactions.
- Solid operations: pouring, mixing, separations, extraction, crushing, conveying, loading, bagging and demolition.
- Pressurized spraying: cleaning parts, applying pesticides, degreasing, sand blasting and painting.
- Shaping operations: cutting, grinding, filing, milling, melding, sawing and drilling.

Gaseous Contaminants

- Inert gases (helium, argon, etc.), which do not metabolize in the body but displace air to produce an oxygen deficiency.
- Acid gases (SO_2, H_2S, HCl, etc.) which are acids or produce acids by reaction with water.
- Alkaline gases (NH_3, etc.), which are alkalies or produce alkalies by reaction with water.
- Organic gases (butane, acetone, etc.), which exist as true gases or vapors from organic liquids.
- Organometallic gases (tetraethyl lead, organo-phosphates, etc.), which have metals attached to organic groups.

Particulate contaminants

- Dusts are mechanically generated solid particulates (0.5 to 10µm)
- Fumes are solid condensation particles of small diameter (0.1 to 1.0 µm)
- Mists are liquid particulate matter (5 to 100 µm)
- Smoke is chemically generated particulates (solid and liquid) of organic origins (0.01 to 0.3 µm)

Selection of Respirator

The following factors shall be taken into account when selecting the proper respirator:

Concentration and Type of Contaminant

The concentration and type of contaminant will determine the model and type of respirator and cartridges/filters or filters to be used. The concentration is based on a sampling of the atmosphere.

Location of Hazardous Area

(Confined Space, nearby contaminants, etc.)

Worker Activity

(Extreme heat, cold, welding hood requirement, etc.)

Types of Respirators

Air-purifying respirators can be either full-face or half masks with mechanical or chemical cartridges to filter dusts, mists, fumes, vapors or gases.

Powered air-purifying respirators use a blower to pass the contaminated air through a filter. The purified air is then delivered into a mask or hood. They filter dusts, mists, fumes, vapors and gases, just like ordinary air-purifying respirators.

Air-purifying respirators cannot be used in oxygen-deficient atmospheres, which can result when another gas displaces the oxygen or consumption of oxygen by a chemical reaction occurs. Oxygen levels below 19.5% require either a source of supplied air or supplied-air respirator protection. Levels below 16% are considered to be unsafe and could cause death. To determine the proper cartridge for air-purifying respirators contact the the employer's Safety Manager or a qualified on-site safety representative of the client. You should also consult the Material Safety Data Sheet of the substance that needs to be filtered.

All cartridges are assigned a color designating the type of contaminant they will filter:

White:	Acid gas
Black:	Organic vapors
Green:	Ammonia gas
Yellow:	Acid gas and organic vapors
Purple:	Radioactive materials
Orange:	Dust, fumes and mists
Olive:	Other gases and vapors

Once the wearer of the respirator can detect an odor, irritation, or taste of the contaminant, the cartridge should be replaced. All cartridges and/or filters shall be changed at the beginning of each shift.

Supplied-air respirators provide the highest level of protection against highly toxic and unknown materials. Supplied air refers to self-contained breathing apparatuses (SCBAs) and air-line respirators. SCBAs have a limited air supply that is carried by the user, allowing for good mobility and fewer restrictions than air-line respirators.

> *Air-line respirators* have an air hose that is connected to a fresh air supply from a central source. The source can be from a compressed air cylinder or air compressor that provides at least Grade D breathing air.
>
> *Emergency Escape Breathing Apparatuses* (EEBAs) provide oxygen for 5, 10 or 15 minutes depending on the unit. These are for emergency situations in which an employee must escape from environments immediately dangerous to life or health (IDLH).
>
> *SCBA* (Self Contained Breathing Apparatus)
> **Integrated Water Services, Inc. does NOT allow employees to work in an Immediately Dangerous to Life and Health (IDLH) environments.**

In order to maintain the NIOSH/MSHA approval of any respirator, mixing parts from other respirator manufacturers is prohibited. This includes airline hoses, valves, gaskets, cartridges, etc. For example, do not use North cartridges or valve gaskets with an MSA product.

Brand and Models
Integrated Water Services, Inc. will use a qualified supplier to procure NIOSH-certified respirators. Only NIOSH-certified respirators shall be used in compliance with the conditions of the certification of the company Respiratory Protection Program (fit testing model, no mixing of different manufacturer parts, cartridges, filters, etc.).

The specific model will be based on the hazard, concentration of contaminant, oxygen level, work environment and type of work being performed. To aid in the selection process the following will be used to identify the proper North respiratory equipment for the work being performed and hazard that is present.

- NIOSH Pocket Guide to Chemicals
- North Cartridge Selection Guide
- North Respirator Selection Guide

Estimate of Exposures and Contaminant Information

- No employee shall enter an IDLH environment.
- Normal oxygen levels shall be maintained.
- No employee shall be exposed to an atmosphere containing concentrations that would exceed the STEL or PEL for the identified atmospheric hazard.

Respirator Fit Testing

Users of respiratory protective equipment must be fit tested. Employees are required to pass qualitative fit test (QLFT) or quantitative fit test (QNFT) before initial use, if a different respirator is used, and annually thereafter.

Before an employee may be required to use any respirator with a negative or positive pressure tight-fitting face piece, the employee must be fit tested with the same make, model, style, and size of respirator that will be used.

This section specifies the kinds of fit tests allowed, the procedures for conducting them, and how the results of the fit tests must be used.

All respirator users are fit-tested at least annually and more often if other federal requirements apply.

Supplied Air Respirators are required to be fit tested as well.

The employer shall ensure that employees using a tight-fitting face piece respirator pass an appropriate qualitative fit test (QLFT) or quantitative fit test (QNFT) as stated in this program.

The employer shall ensure that an employee using a tight-fitting face piece respirator is fit tested prior to initial use of the respirator, whenever a different respirator face piece (size, style, model or make) is used, and at least annually thereafter.

The employer shall conduct an additional fit test whenever the employee reports, or The employer's PLHCP, supervisor, or Program Administrator makes visual observations of, changes in the employee's physical condition that could affect respirator fit. Such conditions include, but are not limited to, facial scarring, dental changes, cosmetic surgery, or an obvious change in body weight.

If after passing a QLFT or QNFT, the employee subsequently notifies The employer, Program Administrator, supervisor, or PLHCP that the fit of the respirator is unacceptable, the employee shall be given a reasonable opportunity to select a different respirator face piece and to be retested.

The fit test shall be administered using an OSHA-accepted QLFT or QNFT protocol. The OSHA-accepted QLFT and QNFT protocols and procedures are contained in this section.

QLFT may only be used to fit test negative pressure air-purifying respirators that must achieve a fit factor of 100 or less. Half face air filtering respirators may be fit tested with irritant smoke while full face air filtering respirators require Portacount fit testing.

If the fit factor, as determined through an OSHA-accepted QNFT protocol, is equal to or greater than 100 for tight-fitting half face pieces, or equal to or greater than 500 for tight-fitting full face pieces, the QNFT has been passed with that respirator.

Fit testing of tight-fitting atmosphere-supplying respirators and tight-fitting powered air-purifying respirators shall be accomplished by performing quantitative or qualitative fit testing in the negative pressure mode, regardless of the mode of operation (negative or positive pressure) that is used for respiratory protection.

Qualitative fit testing of these respirators shall be accomplished by temporarily converting the respirator user's actual face piece into a negative pressure respirator with appropriate filters, or by using an identical negative pressure air-purifying respirator face piece with the same sealing surfaces as a surrogate for the atmosphere-supplying or powered air-purifying respirator face piece.

Quantitative fit testing of these respirators shall be accomplished by modifying the face piece to allow sampling inside the face piece in the breathing zone of the user, midway between the nose and mouth. This requirement

shall be accomplished by installing a permanent sampling probe onto a surrogate face piece, or by using a sampling adapter designed to temporarily provide a means of sampling air from inside the face piece.

Any modifications to the respirator face piece for fit testing shall be completely removed, and the face piece restored to NIOSH-approved configuration, before that face piece can be used in the workplace.

Fit Test Procedures
The requirements in this section apply to all OSHA-accepted fit test methods, both QLFT and QNFT.

The test subject shall be allowed to pick the most acceptable respirator from a sufficient number of respirator sizes so that the respirator is acceptable to, and correctly fits, the user.

Prior to the selection process, the test subject shall be shown how to put on a respirator, how it should be positioned on the face, how to set strap tension and how to determine an acceptable fit. A mirror shall be available to assist the subject in evaluating the fit and positioning of the respirator. This instruction may not constitute the subject's formal training on respirator use, because it is only a review.

The test subject shall be informed that he/she is being asked to select the respirator that provides the most acceptable fit. Each respirator represents a different size and shape, and if fitted and used properly, will provide adequate protection.

The test subject shall be instructed to hold each chosen face piece up to the face and eliminate those that obviously do not give an acceptable fit.

The more acceptable face pieces are noted in case the one selected proves unacceptable; the most comfortable mask is donned and worn at least five minutes to assess comfort. Assistance in assessing comfort can be given by discussing the following points:

- If the test subject is not familiar with using a particular respirator, the test subject shall be directed to don the mask several times and to adjust the straps each time to become adept at setting proper tension on the straps.
- Position of the mask on the nose
- Room for eye protection
- Room to talk
- Position of mask on face and cheeks

The following criteria shall be used to help determine the adequacy of the respirator fit:

- Chin properly placed.
- Adequate strap tension- not overly tightened.
- Fit across nose bridge.
- Respirator of proper size to span distance from nose to chin.
- Tendency of respirator to slip.
- Self-observation in mirror to evaluate fit and respirator position.

Use the Fit Test form.

User Seal Check
Before conducting the negative and positive pressure checks, the subject shall be told to seat the mask on the face by moving the head from side-to-side and up and down slowly while taking in a few slow deep breaths. The test subject shall conduct a user seal check, either the negative or positive pressure seal checks described below:

Positive Pressure Check
Close off the exhalation valve and exhale gently into the face piece. The face fit is considered satisfactory if a slight positive pressure can be built up inside the face piece without any evidence of outward leakage of air at the seal. For most respirators this method of leak testing requires the wearer to first remove the exhalation valve cover before closing off the exhalation valve and then carefully replacing it after the test.

Negative Pressure Check
Close off the inlet opening of the canister or cartridge(s) by covering with the palm of the hand(s) or by replacing the filter seal(s), inhale gently so that the face piece collapses slightly, and hold the breath for ten seconds. The design of the inlet opening of some cartridges cannot be effectively covered with the palm of the hand. The test can be performed by covering the inlet opening of the cartridge with a thin latex or nitrile glove. If the face piece remains in its slightly collapsed condition and no inward leakage of air is detected, the tightness of the respirator is considered satisfactory.

The test shall not be conducted if there is any hair growth between the skin and the face piece sealing surface, such as stubble beard growth, beard, moustache or sideburns which cross the respirator sealing surface. Any type of apparel which interferes with a satisfactory fit shall be altered or removed, including glasses.

If a test subject exhibits difficulty in breathing during the tests, she or he shall be referred to a physician or other licensed health care professional, as appropriate, to determine whether the test subject can wear a respirator while performing her or his duties. If the employee finds the fit of the respirator unacceptable, the test subject shall be given the opportunity to select a different respirator and to be retested.

Prior to the commencement of the fit test, the test subject shall be given a description of the fit test and the test subject's responsibilities during the test procedure. The description of the process shall include a description of the test exercises that the subject will be performing. The respirator to be tested shall be worn for at least 5 minutes before the start of the fit test.

The fit test shall be performed while the test subject is wearing any applicable safety equipment that may be worn during actual respirator use which could interfere with respirator fit.

Test Exercises
Each test exercise shall be performed for one minute except for the grimace exercise which shall be performed for 15 seconds. The test subject shall be questioned by the test conductor regarding the comfort of the respirator upon completion of the protocol. If it has become unacceptable, another model of respirator shall be tried. If due to medical or health conditions the employee cannot perform the test exercises the fit test shall not be performed and the employee not allowed to use a respirator until all elements of the fit test can be achieved.

The respirator shall not be adjusted once the fit test exercises begin. Any adjustment voids the test, and the fit test must be repeated.

The following test exercises are to be performed for all fit testing methods prescribed in this procedure:

- Normal breathing. In a normal standing position, without talking, the subject shall breathe normally.
- Deep breathing. In a normal standing position, the subject shall breathe slowly and deeply, taking caution so as not to hyperventilate.
- Turning head side to side. Standing in place, the subject shall slowly turn his/her head from side to side between the extreme positions on each side. The head shall be held at each extreme momentarily so the subject can inhale at each side.
- Moving head up and down. Standing in place, the subject shall slowly move his/her head up and down. The subject shall be instructed to inhale in the up position (i.e., when looking toward the ceiling).
- Talking. The subject shall talk out loud slowly and loud enough so as to be heard clearly by the test conductor. The subject shall read from the Rainbow Passage

Rainbow Passage

> "When the sunlight strikes raindrops in the air, they act like a prism and form a rainbow. The rainbow is a division of white light into many beautiful colors. These take the shape of a long round arch, with its path high above, and its two ends apparently beyond the horizon. There is, according to legend, a boiling pot of gold at one end. People look, but no one ever finds it. When a man looks for something beyond reach, his friends say he is looking for the pot of gold at the end of the rainbow." Continue to read for one minute.

- Grimace. The test subject shall grimace by smiling or frowning. (This applies only to QNFT testing; it is not performed for QLFT)
- Jogging in place. The test subject shall jog in place being careful to be aware of their surroundings.
- Normal breathing. Same as exercise (1).

Qualitative Fit Test (QLFT) Protocols

General

The employer shall ensure that persons administering QLFT are able to prepare test solutions, calibrate equipment and perform tests properly, recognize invalid tests, and ensure that test equipment is in proper working order. The employer shall ensure that QLFT equipment is kept clean and well maintained so as to operate within the parameters for which it was designed.

Irritant Smoke (Stannic Chloride) Protocol

This qualitative fit test uses a person's response to the irritating chemicals released in the ``smoke'' produced by a stannic chloride ventilation smoke tube to detect leakage into the respirator.

General Requirements and Precautions. The respirator to be tested shall be equipped with high efficiency particulate air (HEPA) or P100 series filter(s).

Only stannic chloride smoke tubes shall be used for this protocol. No form of test enclosure or hood for the test subject shall be used.

The smoke can be irritating to the eyes, lungs, and nasal passages. The test conductor shall take precautions to minimize the test subject's exposure to irritant smoke. Sensitivity varies, and certain individuals may respond to a greater degree to irritant smoke. Care shall be taken when performing the sensitivity screening checks that

determine whether the test subject can detect irritant smoke to use only the minimum amount of smoke necessary to elicit a response from the test subject.

The fit test shall be performed in an area with adequate ventilation to prevent exposure of the person conducting the fit test or the build-up of irritant smoke in the general atmosphere.

The person to be tested must demonstrate his or her ability to detect a weak concentration of the irritant smoke.

- The test operator shall break both ends of a ventilation smoke tube containing stannic chloride, and attach one end of the smoke tube to a low flow air pump set to deliver 200 milliliters per minute, or an aspirator squeeze bulb. The test operator shall cover the other end of the smoke tube with a short piece of tubing to prevent potential injury from the jagged end of the smoke tube.
- The test operator shall advise the test subject that the smoke can be irritating to the eyes, lungs, and nasal passages and instruct the subject to keep his/her eyes closed while the test is performed.
- The test subject shall be allowed to smell a weak concentration of the irritant smoke before the respirator is donned to become familiar with its irritating properties and to determine if he/she can detect the irritating properties of the smoke. The test operator shall *carefully direct a small amount* of the irritant smoke in the test subject's direction to determine that he/she can detect it.

Irritant Smoke Fit Test Procedure

- The person being fit tested shall don the respirator without assistance, and perform the required user seal check(s).
- The test subject shall be instructed to keep his/her eyes closed if wearing a half face respirator.
- The test operator shall direct the stream of irritant smoke from the smoke tube toward the face seal area of the test subject, using the low flow pump or the squeeze bulb. The test operator shall begin at least 12 inches from the face piece and move the smoke stream around the whole perimeter of the mask. The operator shall gradually make two more passes around the perimeter of the mask, moving to within six inches of the respirator.
- If the person being tested has not had an involuntary response and/or detected the irritant smoke, proceed with the test exercises.
- The exercises identified in the Test Exercises of this procedure shall be performed by the test subject while the respirator seal is being continually challenged by the smoke, directed around the perimeter of the respirator at a distance of six inches.
- If the person being fit tested reports detecting the irritant smoke at any time, the test is failed. The person being retested must repeat the entire sensitivity check and fit test procedure.
- Each test subject passing the irritant smoke test without evidence of a response (involuntary cough, irritation) shall be given a second sensitivity screening check, with the smoke from the same smoke tube used during the fit test, once the respirator has been removed, to determine whether he/she still reacts to the smoke. Failure to evoke a response shall void the fit test.
- If a response is produced during this second sensitivity check, then the fit test is passed. The glass tube shall be disposed of properly.

Quantitative Fit Test (QNFT) Protocols

Using controlled negative pressure and appropriate instrumentation to measure the volumetric leak rate of a face piece to quantify the respirator have been demonstrated to be acceptable to OSHA.

The employer shall ensure that persons administering QNFT are able to calibrate equipment and perform tests properly, recognize invalid tests, calculate fit factors properly and ensure that test equipment is in proper working order.

The employer shall ensure that QNFT equipment is kept clean and is maintained and calibrated according to the manufacturer's instructions so as to operate at the parameters for which it was designed.

Portacount Fit Test Requirements

- Check the respirator to make sure the respirator is fitted with a high-efficiency filter and that the sampling probe and line are properly attached to the face piece.
- Instruct the person to be tested to don the respirator for five minutes before the fit test starts. This purges the ambient particles trapped inside the respirator and permits the wearer to make certain the respirator is comfortable. This individual shall already have been trained on how to wear the respirator properly.
- Check the following conditions for the adequacy of the respirator fit: Chin properly placed; Adequate strap tension, not overly tightened; Fit across nose bridge; Respirator of proper size to span distance from nose to chin; Tendency of the respirator to slip; Self-observation in a mirror to evaluate fit and respirator position.
- Have the person wearing the respirator do a user seal check. If leakage is detected, determine the cause. If leakage is from a poorly fitting face piece, try another size of the same model respirator, or another model of respirator.
- Follow the manufacturer's instructions for operating the Portacount and proceed with the test.
- The test subject shall be instructed to perform the exercises in Test Exercises section of this procedure.
- After the test exercises, the test subject shall be questioned by the test conductor regarding the comfort of the respirator upon completion of the protocol. If it has become unacceptable, another model of respirator shall be tried.

Portacount Test Instrument
The Portacount will automatically stop and calculate the overall fit factor for the entire set of exercises. The overall fit factor is what counts. The Pass or Fail message will indicate whether or not the test was successful. If the test was a Pass, the fit test is over.

Since the pass or fail criterion of the Portacount is user programmable, the test operator shall ensure that the pass or fail criterion meet the requirements for minimum respirator performance.

A record of the test needs to be sent to the Safety Manager and kept on file, assuming the fit test was successful. The record must contain the test subject's name; overall fit factor; make, model, style, and size of respirator used; and date tested.

Use, Maintenance, and Care of Respirators

This section requires The employer to provide for the use, cleaning and disinfecting, storage, inspection, and repair of respirators used by employees. OSHA Appendix B - Respirator Cleaning Procedures (Mandatory) shall be followed.

Use

- The effective facial seal of respiratory protective equipment is vital. Anything that can affect the seal must be prohibited and include facial hair, glasses, etc. Respirators with tight-fitting facepieces shall not be worn by employees who have facial hair that comes between the sealing surface of the facepiece and the face or that interferes with valve function.
- Each time a respirator is put on a positive and negative pressure check shall be performed.

Cleaning and Storage Requirements

Respirators are properly cleaned and stored. Respirators issued for the exclusive use of an employee shall be cleaned and disinfected as often as necessary to be maintained in a sanitary condition. All respirators shall be stored to protect them from damage, contamination, dust, sunlight, extreme temperatures, excessive moisture, and damaging chemicals, and they shall be packed or stored to prevent deformation of the facepiece and exhalation valve.

The respirators shall be cleaned and disinfected at the following intervals:

- Respirators issued for the exclusive use of an employee shall be cleaned and disinfected by the employee as often as necessary to be maintained in a sanitary condition,
- Respirators used in fit testing and training shall be cleaned and disinfected after each use by the Safety Manager or designated person.
- Each individual who is assigned a cartridge respirator is responsible for seeing that the respirator is cleaned, inspected, and properly stored.

Cleaning Procedures

- Remove filters, cartridges, or canisters. Disassemble face pieces by removing speaking diaphragms, demand and pressure-demand valve assemblies, hoses, or any components recommended by the manufacturer. Discard or repair any defective parts.
- Wash components in warm water with a mild detergent or with a cleaner recommended by the manufacturer. A stiff bristle (not wire) brush may be used to facilitate the removal of dirt.
- Rinse components thoroughly in clean, warm, preferably running water. Drain.
- When the cleaner used does not contain a disinfecting agent, respirator components should be immersed for two minutes in commercially available cleansers of equivalent disinfectant quality. Another alternative is to use wipes containing alcohol that are intended for use with respirators.
- Rinse components thoroughly in clean, warm, preferably running water. Drain. The importance of thorough rinsing cannot be overemphasized. Detergents or disinfectants that dry on face pieces may result in dermatitis. In addition, some disinfectants may cause deterioration of rubber or corrosion of metal parts if not completely removed.
- Components should be hand-dried with a clean lint-free cloth or air dried. Reassemble face piece, replacing filters, cartridges, and canisters where necessary. Test the respirator to ensure that all components work properly.

Storage and Inspection

- Respiratory equipment shall be stored in a manner to protect it from damage, contamination, temperature extreme, etc.
- Respiratory equipment intended for emergency use shall be stored in an area that is readily accessible and be clearly marked.

The employer shall ensure that respirators are inspected as follows:

- Respirators are inspected before use. All respirators used in routine situations shall be inspected before each use and during cleaning.
- All respirators maintained for use in emergency situations shall be inspected at least monthly and in accordance with the manufacturer's recommendations and shall be checked for proper function before and after each use; and emergency escape-only respirators shall be inspected before being carried into the workplace for use.
- A check by the employee of respirator function, tightness of connections, and the condition of the various parts including, but not limited to, the face piece, head straps, valves, connecting tube, and cartridges canisters or filters; and
- A check of elastomeric parts for pliability and signs of deterioration.

Breathing Air Quality and Use

The employer shall ensure that compressed air accords with the following specifications:

- Compressed breathing air shall meet at least the requirements for Type 1-Grade D breathing air described in ANSI/Compressed Gas Association Commodity Specification for Air, G-7.1-1989, to include:
    - Oxygen content (v/v) of 19.5-23.5%.
    - Hydrocarbon (condensed) content of 5 milligrams per cubic meter of air or less.
    - Carbon monoxide (CO) content of 10 ppm or less.
    - Carbon dioxide content of 1,000 ppm or less, and
    - Lack of noticeable odor.

- The employer shall ensure that oxygen is not used in compressed air units.
- The employer shall ensure that oxygen concentrations greater than 23.5% are used only in equipment designed for oxygen service or distribution.
- The employer shall ensure that cylinders used to supply breathing air to respirators meet DOT requirements and that:
    - Cylinders are tested and maintained as prescribed in the Shipping Container Specification Regulations of the Department of Transportation (49 CFR part 173 and part 178).
    - Cylinders of purchased breathing air have a certificate of analysis from the supplier that the breathing air meets the requirements for Type 1--Grade D breathing air, and
    - The moisture content in the cylinder does not exceed a dew point of -50 deg. F (-45.6 deg. C) at 1 atmosphere pressure.

- The employer shall ensure that compressors used to supply breathing air to respirators are constructed and situated so as to:
    - Prevent entry of contaminated air into the air-supply system.
    - Minimize moisture content so that the dew point at 1 atmosphere pressure is 10 degrees F (5.56 deg. C) below the ambient temperature.
    - Have suitable in-line air-purifying sorbent beds and filters to further ensure breathing air quality. Sorbent beds and filters shall be maintained and replaced or refurbished periodically following the manufacturer's instructions.

- Have a tag containing the most recent change date and the signature of the person authorized by the employer to perform the change. The tag shall be maintained at the compressor.
- For compressors that are not oil-lubricated, the employer shall ensure that carbon monoxide levels in the breathing air do not exceed 10 ppm.
- For oil-lubricated compressors, the employer shall use a high-temperature or carbon monoxide alarm, or both, to monitor carbon monoxide levels. If only high-temperature alarms are used, the air supply shall be monitored at intervals sufficient to prevent carbon monoxide in the breathing air from exceeding 10 ppm.
- The employer shall ensure that breathing air couplings are incompatible with outlets for nonrespirable worksite air or other gas systems. No asphyxiating substance shall be introduced into breathing air lines.

Repairs

The employer shall ensure that respirators that fail an inspection or are otherwise found to be defective are immediately removed from service, and are discarded or repaired or adjusted in accordance with the following procedures:

- Repairs or adjustments to respirators are to be made only by persons appropriately trained to perform such operations and shall use only the respirator manufacturer's NIOSH-approved parts designed for the respirator;
- Repairs shall be made according to the manufacturer's recommendations and specifications for the type and extent of repairs to be performed; and

Voluntary Use

If an employee chooses to voluntarily wear a respirator when not required by this Program (contaminants do not meet protection standards, odors, etc.) they will be advised of the following in their training:

Respirators are an effective method of protection against designated hazards when properly selected and worn. Respirator use is encouraged, even when exposures are below the exposure limit, to provide an additional level of comfort and protection for employees.

However, if a respirator is used improperly or not kept clean, the respirator itself can become a hazard to the employee. Sometimes, employees may wear respirators to avoid exposures to hazards, even if the amount of hazardous substance does not exceed the limits set by OSHA standards. If your employer provides respirators for your voluntary use, of if you provide your own respirator, you need to take certain precautions to be sure that the respirator itself does not present a hazard.

You should do the following:

- Read and heed all instructions provided by the manufacturer on use, maintenance, cleaning and care, and warnings regarding the respirator’s limitations.
- Choose respirators certified for use to protect against the contaminant of concern. NIOSH, the National Institute for Occupational Safety and Health of the U.S. Department of Health and Human Services, certifies respirators. A label or statement of certification should appear on the respirator or respirator packaging. It will tell you what the respirator is designed for and how much it will protect you.
- Do not wear your respirator into atmospheres containing contaminants for which your respirator is not designed to protect against. For example, a respirator designed to filter dust particles will not protect you against gases, vapors, or very small solid particles of fumes or smoke.
- Keep track of your respirator so that you do not mistakenly use someone else's respirator.

Workplace Monitoring

A program of monitoring potential employee exposures has been implemented through the corporate health and safety department. Project personnel may also be assigned with the task of conducting air monitoring. Direct-reading instruments will also be used in the characterization of potential exposures. All the data collected is used to determine the appropriateness of the respiratory equipment.

Recordkeeping

The employer will establish and retain written information regarding medical evaluations, fit testing and the respirator program. Records of medical evaluations required by this section must be retained and made available in accordance with 29 CFR 1910.1020. The employer shall provide the employee with an opportunity to discuss the questionnaire and examination results with the PLHCP.

Records will be treated confidentially and maintained on file in the employer's corporate office by the Safety Manager.

Program Evaluation

The employer shall conduct evaluations of the workplace as necessary to ensure that the provisions of the current written program are being effectively implemented and that it continues to be effective.

The employer shall regularly consult employees required to use respirators to assess the employees' views on this program's effectiveness and to identify any problems. Any problems that are identified during this assessment shall be corrected. Factors to be assessed and verified include, but are not limited to:

- Respirator fit (including the ability to use the respirator without interfering with effective workplace performance); Appropriate respirator selection for the hazards to which the employee is exposed;
- Proper respirator use under the workplace conditions the employee encounters; and
- Proper respirator maintenance.

Training

Employees are provided training on Respiratory Protection. Training shall address employee knowledge of respirators, fit, use, limitations, emergency situations, wearing, fit checks, maintenance and storage, medical signs and symptoms of effective use and general requirements of the OSHA standard. The training must be provided before requiring the employee to use the respirator.

Retraining

Retraining shall be administered annually, and when the following situations occur:

- Changes in the workplace or the type of respirator render previous training obsolete.
- Inadequacies in the employee's knowledge or use of the respirator indicate that the employee has not retained the requisite understanding or skill, or
- Any other situation arises in which retraining appears necessary to ensure safe respirator use.

Integrated Water Services, Inc. Qualitative Respiratory Fit Test Record Sheet

Note: Employee Must Have Completed Respiratory Protection Training and Passed Airway Exam Prior To Fit Testing

Test Date: _____

Employee Name: _____ **SS#** _____

Test Agent: Irritant Smoke (Stannic Chloride)

Respirator Identification:

Model: Size (circle one): Small Medium Large
Manufacturer: Approval No: 42 CFR 84
Additional Information:

Fit Test Protocol (Test Subject Initials indicate steps were performed):

___ **TOLD TO KEEP EYES CLOSED DURING SMOKE EXPOSURE**

___Test subject smelled irritant smoke before fit test
___Protocol reviewed before fit test
___Shown how to wear respirator
___Mirror available for use by subject
___Must wear PPE (hard hat, etc.) if needed
___Wore respirator 5 minutes before fit test
___Test subject did not have hair in fitting area
___Performed positive pressure & negative fit check successfully after seating respirator

Fit Test Steps (1 minute each except Grimace = 15 seconds)

___ Breath normally
___ Nod up and down
___ Jog in place
___ Breathe deeply
___ Talking (Read Rainbow Passage)
___ Breath normally
___ Turned head side to side
___ Grimace

"When the sunlight strikes raindrops in the air, they act like a prism and form a rainbow. The rainbow is a division of white light into many beautiful colors. These take the shape of a long round arch, with its path high above, and its two ends apparently beyond the horizon. There is, according to legend, a boiling pot of gold at one end. People look, but no one ever finds it. When a man looks for something beyond his reach, his friends say he is looking for the pot of gold at the end of the rainbow".

Fit Test Results: _____ Pass _____ Fail

Test Subject Signature: _____ Date: _____

Examiner's Name: _____ Examiner's Signature: _____ Date: _____

Distribution: **Employee Local File is stored on the Company online Support Center**

RIGGING & MATERIAL HANDLING

Scope and Applicability Statement
This document provides general safety procedures and regulatory guidance for employers and workers in accordance with U.S. Occupational Safety and Health Administration (OSHA) standards under 29 CFR 1910 and 29 CFR 1926. These procedures apply to all workplaces where they are implemented as part of a comprehensive safety program.
Customization and Compliance Statement
Employers are responsible for ensuring compliance with all applicable local, state, and federal safety regulations. Workers must adhere to established safety protocols to prevent workplace injuries and illnesses.

OpsIntegrity™

Purpose
The purpose of this program is to ensure safe and incident-free lifting operations by employees performing rigging and material handling tasks.

Scope
This document provides comprehensive safety procedures and regulatory guidance for employers and workers in accordance with U.S. Occupational Safety and Health Administration (OSHA) standards under 29 CFR 1910 and 29 CFR 1926. These procedures apply to all workplaces where they are implemented as part of a comprehensive safety program.

Customization and Compliance Statement
Employers are responsible for ensuring compliance with all applicable local, state, and federal safety regulations. Workers must adhere to established safety protocols to prevent workplace injuries and illnesses.

Responsibilities
Supervisors:
- Ensure that all rigging and lifting operations comply with safety requirements.
- Verify that employees involved in rigging operations have received proper training and certification.

Employees:
- Only trained and qualified personnel are allowed to attach or detach lifting equipment to loads.
- Comply with all safety procedures related to rigging and material handling.

Procedures

General Requirements
- Only qualified riggers are allowed to attach loads to lifting hooks.
- Only qualified crane operators may operate cranes during lifting operations.
- Only approved rigging equipment rated for lifting or suspension may be used to lift, suspend, or secure any load, including when suspending loads temporarily for positioning or stability purposes.
- Under no circumstances shall materials not specifically engineered for lifting (such as pallet strapping, tie-downs, or non-load-rated items) be used to bear or support a suspended load.
- Rigging shall be selected based on load type, weight, center of gravity, and lifting configuration.
- Rigging must be clearly labeled with the working load limit (WLL) and must not be used beyond that capacity.
- A second method of securement must be considered if the load will remain suspended for an extended duration or if personnel will be working nearby.
- Pre-use inspections of all rigging components must include checks for cuts, abrasions, fraying, bent or damaged hardware, missing or unreadable labels, and signs of chemical or heat damage.

- Defective rigging must be removed from service immediately and reported to a supervisor.

Pre-Task Planning

- All rigging and lifting tasks must be covered in the pre-job Task Hazard Analysis (THA) or Job Hazard Analysis (JHA).
- Hazard recognition during tailgate or pre-task meetings must specifically address:
    - Load security and stability
    - Suitability of rigging material
    - Clearance zones and swing radius
    - Personnel positioning
- Workers must be encouraged to question any lift where the materials or method appear uncertain or make-shift.
- A “Stop Work Authority” applies to all lifting operations — any worker may pause the job if a risk is identified.

Material Handling

- Only qualified riggers are allowed to attach loads to lifting hooks.
- Only qualified crane operators may operate cranes during lifting operations.
- Only approved rigging equipment rated for lifting or suspension may be used to lift, suspend, or secure any load, including when suspending loads temporarily for positioning or stability purposes.
- Under no circumstances shall materials not specifically engineered for lifting (such as pallet strapping, tie-downs, or non-load-rated items) be used to bear or support a suspended load.
- Rigging shall be selected based on load type, weight, center of gravity, and lifting configuration.
- Rigging must be clearly labeled with the working load limit (WLL) and must not be used beyond that capacity.
- A second method of securement must be considered if the load will remain suspended for an extended duration or if personnel will be working nearby.
- Pre-use inspections of all rigging components must include checks for cuts, abrasions, fraying, bent or damaged hardware, missing or unreadable labels, and signs of chemical or heat damage.
- Defective rigging must be removed from service immediately and reported to a supervisor.

Training Requirements

- Employees must demonstrate competency in:
    - Selection of proper rigging hardware (eye bolts, shackles, hooks, wire rope, synthetic slings, chain slings, etc.).
    - Inspection of rigging hardware before, during, and after lifting operations.
    - Proper methods for securing, attaching, lifting, moving, lowering, and placing loads.
    - Safe storage of rigging equipment.
- Employees must complete refresher training annually.

SAFETY STEWARD PROGRAM

Integrated Water Services, Inc.
(the Company)

Purpose

The purpose of the Safety Steward program is to ensure that the key safety initiatives are completed in all IWS Companies on every project as outlined in this program.

Scope

This program is applicable to the assigned Safety Stewards. The responsibilities as outlined in this Procedure are tasks that must be completed and maintained with a score of 100% in order for the Safety Steward to receive the performance-based pay incentive that accompanies a 100% compliance status.

Key Responsibilities

Safety Director

- Share status reports to the Safety Stewards and their managers each Monday so they can have an opportunity to correct any deficiencies for the upcoming Thursday scorecard distribution.
- Mentor and communicate with the Safety Stewards as required for them to understand what is expected in regard to performance, roles, and responsibilities of their position.

Managers and Supervisors

- Assign project Safety Stewards for their respective project(s).
- Allow the Safety Stewards with the needed time to complete the requirements of their position.

Safety Stewards

Emergency Action Plan (EAP)

- The Safety Steward is required to complete an Emergency Action Plan (EAP) on their respective project at the onset of the project. There is an instructional video that provides step-by-step instructions on how to complete the EAP process on the support center FAQ page: www.iws.support
    - The project EAP must first be developed in order for the Safety Steward to qualify for the pay rate increase that comes with the following four tasks!

Safety Orientation and Annual Safety Training

- The Safety Steward is responsible for ensuring each project worker has completed the required Safety Orientation training prior to that worker arriving on the project. For each month the project closes with a 100% training score on the Training Matrix, the Safety Steward will receive a $50 incentive bonus for that month.

Job Hazard Analysis (JHA)

- A JHA must be completed each day that manual labor activities are performed. All crew members and all affected persons must be included in the JHA planning process. The JHA must be completed using the JHA form located in the Forms tab of the support center. For each month the project closes with a 100% score on the JHA matrix, the Safety Steward will receive a $50 incentive bonus for that month.

Toolbox Talks (TT)

- A TT must be reviewed by each project team once a week. On Sunday afternoon, the Safety Director will distribute the mandatory TT that the crews must review for the upcoming month. The TT review must be documented on the Toolbox Talk Training Registration form located in the safety support center: https://iws.support/toolbox-talks. For each month the project closes with a 100% TT score on the Training Matrix, the Safety Steward will receive a $50 incentive bonus for that month.

Good Catch (GC)

- Each project is required to submit at least one good catch for every four months of active field operations. The GC must be submitted using the Good Catch form at the Forms tab of the safety support center. For each month the project closes with a 100% score on the GC matrix, the Safety Steward will receive a $50 incentive bonus for that month.

Procedures

- The Safety Steward will be required to ensure their respective project maintains a 100% compliance status on the five measures noted above.
- Failure to meet the threshold of all five actions in a one-month period will result in forfeiture of the $200 monthly incentive bonus for that month.
- Safety Stewards will receive their incentive pay on a monthly basis.
- Safety Stewards who fail to maintain a 100% compliance rate will be relieved of their Safety Steward responsibilities.
- This procedure is subject to change.

Resources

Safety Steward Procedure: https://iws.support/corporate-hse-procedures
Safety Steward Training Module: https://form.jotform.com/231785388494170
Emergency Action Plan Tutorial Video: https://iws.support/faq

SCAFFOLDING

Integrated Water Services, Inc.
(the Company)

Purpose

The purpose of this program is to define the requirements for the use of scaffolding.

Scope

This program applies to all scaffolding used on Integrated Water Services (IWS) property or used by an IWS employee.

When work is performed by a subcontractor on a company site, the contractor's written safety program shall take precedence for their employees. However, subcontractors may adopt this procedure for their use.

Definitions

Bearer: A horizontal member of a scaffold upon which the platform rests and which may be supported by ledgers.
Brace: A tie that holds one scaffold member in a fixed position with respect to another member.
Coupler: A device for locking together the components of a tubular metal scaffold which shall be designed and used to safely support the maximum intended loads.
Double pole or independent pole scaffold: A scaffold supported from the base by a double row of uprights, independent of support from the walls and constructed of uprights, ledgers, horizontal platform bearers, and diagonal bracing.
Guardrail: A rail secured to uprights and erected along the exposed sides and ends of platforms.
Heavy Duty Scaffold: A scaffold designed and constructed to carry a working load not to exceed 75 pounds per square foot.
Ledger (stringer): A horizontal scaffold member which extends from post to post and which supports the putlogs or bearer forming a tie between the posts.
Light Duty Scaffold: A scaffold designed and constructed to carry a working load not to exceed 25 pounds per square foot.
Manually Propelled Mobile Scaffold: Manually propelled mobile scaffold.
Maximum intended load: The total of all loads including the working load, the weight of the scaffold, and such other loads as may be reasonably anticipated.
Medium duty scaffold: A scaffold designed and constructed to carry a working load not to exceed 50 pounds per square foot.
Mid-Rail: A rail approximately midway between the guardrail and platform, used when required, and secured to the uprights erected along the exposed sides and ends of platforms.
Putlog: A scaffold member upon which the platform rests.
Runner: The lengthwise horizontal bracing or bearing members or both.
Scaffold: Any temporary elevated platform and its supporting structure used for supporting workmen or materials or both.
Toe board: A barrier secured along the sides and ends of a platform, to guard against the falling of material.
Tube and coupler scaffold: An assembly consisting of tubing, which serves as posts, bearers, braces, ties, and runners, a base supporting the posts, and special couplers which serve to connect the uprights and to join the various members.
Tubular welded frame scaffold: A sectional, panel, or frame metal scaffold substantially built up of prefabricated welded sections that consist of posts and horizontal bearer with intermediate members. Panels or frames shall be braced with diagonal or cross braces.
Working Load: Load imposed by men, materials, and equipment.

Key Responsibilities

Managers and Supervisors

- Responsible for ensuring that scaffolds are erected by a qualified person, that set up inspections are performed, and all daily inspections are performed by a competent person before work starts for the day.
- Responsible for ensuring that all employees, and/or contractors have been trained in the use and inspection methods for scaffolds. Only qualified and competent personnel are allowed to use or modify scaffolding systems.
- Responsible for ensuring that all employees and contractors are aware that if an inspection discovers a defect, the scaffold cannot be used until repairs are made.

Employees

- Responsible for following this program by inspecting the scaffolds daily and reporting any damages or repairs to their supervisor.

Procedure

General Requirements

Scaffolds shall be furnished and erected in accordance with applicable standards for persons engaged in work that cannot be done safely from the ground or from solid construction. Except that ladders used for such work shall conform to ladder safety standards.

Scaffolds shall only be erected by a qualified third party, who is competent to certify the scaffolding safe to use.

The footing or anchorage for scaffolds shall be sound, rigid, and capable of carrying the maximum intended load without settling or displacement. Unstable objects such as barrels, boxes, loose boards shall not be used to support scaffolds or planks.

Scaffolds and their components shall be capable of supporting without failure at least four times the maximum intended loads. Scaffold components must meet OSHA requirements 29 CFR 1910.28 and 29 CFR 1926.451.

Wood scaffold planks must be cross-supported every 8 feet. Scaffold deck boards shall be cleated, wired or nailed into place.

All working levels of scaffolds will be floored completely except where internal ladders require space for ladder openings.

Scaffolds and other devices mentioned or described in this program shall be maintained in safe condition. Scaffolds shall not be altered or moved horizontally while they are occupied.

Any scaffold damaged or weakened from any cause shall be immediately repaired and shall not be used until repairs have been completed.

Scaffolds shall not be loaded in excess of the working loads for which they are intended.

Bolts used in the construction of scaffolds shall be of adequate size and in sufficient numbers at each connection to develop the designed strength of the scaffold.

All platforms shall be overlapped (minimum 12 inches) and secured from any movement.

An access ladder or equivalent safe access shall be provided.

Scaffold planks shall extend over their end supports not less than 6 inches or more than 18 inches.

The poles, legs, or uprights of scaffolds shall be plumb, and securely and rigidly braced to prevent swaying and displacement.

Materials being hoisted onto a scaffold shall have a tag line.

Overhead protection shall be provided for workers on a scaffold exposed to overhead hazards.

Toe boards and guardrails shall be installed if a scaffold or platform is erected to a height of 6 feet or more. Scaffolds shall be provided with a screen between the toe board and the guardrail, extending along the entire opening, consisting of No. 18 gauge wire one-half inch mesh or the equivalent, where workers are required to work or pass under the scaffolds.

Work shall not be performed on a scaffold during storms or high winds.

Work shall not be performed on scaffolds that are covered with snow or ice, unless all snow and ice has been removed and all planking has been sanded to prevent slipping.

Tools, material, and debris shall not be allowed to accumulate in quantities to cause a hazard.

Inspections

Scaffolding shall be inspected, by a competent person as required by the manufacturer and regulatory requirements. The competent person must also ensure scaffolds are safe prior to and during scaffold use.

- At a minimum, the following shall be inspected by the competent person after erection, before the start of the day or beginning of a shift change to ensure scaffolds are safe prior to and during use:
    - Ground or surface footing shall be inspected to ensure that there is no settling.
    - All main supports and cross braces shall be inspected for any signs of damage, missing pins, bolts and any locks and/or safety keepers.
    - All walking surfaces and/or planks shall be inspected for damage and proper placements and any possible movement.
    - All walkways and planks must be secure to prevent any movement.
- Inspection shall be made to ensure that the scaffold is stable and any movement is prevented.
- If during the inspection, a defect or damage to the scaffold is discovered, the scaffold shall be tagged out by the competent person, complied with and use prohibited until needed repairs are made.

Mandatory Signs and Tags for Defects Found
Signs and tags shall be visible at all times when work is being performed and shall be removed or covered promptly when the hazards no longer exist. Employees shall be instructed in complying with signs and tags.

Defective or unsafe equipment or conditions shall be tagged out by the competent person using a weather resistant tag secured to the scaffolding structure on all four sides and must be complied with. An example would be improper footing conditions were observed.

Danger signs shall be used only where an immediate hazard exists. Danger signs must be posted around the immediate area of the scaffold, to alert other workers of possible danger from falling objects from the scaffold.

Caution Signs and/or barricade tape shall be used to mark off a larger area around scaffolding warning other workers to use caution.

Modifications
Modification and repairs shall be performed by a qualified person, who is competent to certify the scaffolding safe to use to ensure non-qualified personnel do not create additional hazards.

Employees shall not perform any modifications or repairs, unless they have been trained and certified, and failure to comply may result in disciplinary action and or termination.

Training Requirements

All employees that work on scaffolds shall be trained and qualified as a Scaffolding Competent Person. The supervisor shall have each employee who performs work while on a scaffold trained by a person qualified in the subject matter to recognize the hazards associated with the type of scaffold being used and to understand the procedures to control or minimize those hazards. The training shall occur before use and include the following areas:

- Basic safety information and duties of a competent person assembling/disassembling scaffolding (see below). Basic safety information must be provided prior to use and when conditions change.
- Hazards including fall protection, electrical safety, falling object protection (see below).
- Tags – types and the requirement to comply with.
- The proper use of the scaffold, and the proper handling of materials on the scaffold.
- The correct procedures for dealing with electrical hazards and for erecting, maintaining, and disassembling the fall protection systems and falling object protection systems being used.
- The maximum intended load capacity of the scaffolds used.

The supervisor shall have each employee who is involved in erecting, disassembling, moving, operating, repairing, maintaining, or inspecting a scaffold trained by a qualified trainer to recognize any hazards associated with the work in question.

- The training shall include the following topics, as applicable:
- The nature of scaffold hazards.
- The correct procedures for erecting, disassembling, moving, operating, repairing, inspecting, and maintaining the type of scaffold in use.
- The design criteria, maximum intended load-carrying capacity and intended use of the scaffold.

When the employer has reason to believe that an employee lacks the skill or understanding needed for safe work involving the erection, use or dismantling of scaffolds, the employer shall retrain each employee so that the requisite proficiency is regained. Retraining is also required in at least the following situations:

- Where changes in scaffolding at the worksite present a hazard about which an employee has not been previously trained.
- Where changes in the types of scaffolds, fall protection, falling object protection, or other equipment present a hazard about which an employee has not been previously trained.
- Where inadequacies in an affected employee's work involving scaffolds indicate that the employee has not retained the requisite proficiency.

Hazards Associated with the Use of Scaffolds

- Nearby electrical lines or source of electrical hazards
- Poor foundation – scaffold shall be erected on a firm and stable base.
- Damaged scaffold components.
- Overload of scaffold components (load capacity).
- Unstable, incomplete, or incorrect use of scaffold.
- Base frames not adequately braced, tied or supported.
- Scaffold exceeds height to base dimensions ratio.
- Inappropriate access or egress points.
- Slips and falls.
- Falling objects.
- Manual handling.
- Movement of plant and machinery – all cranes and mobile machinery shall keep within designated areas and away from scaffolding.

Duties of a Competent Person Assembling/Disassembling Scaffolding

General

- To select and direct employees who erect, dismantle, move, or alter scaffolds.
- To determine if it is safe for employees to work on or from a scaffold during storms or high winds and to ensure that a personal fall arrest system or wind screens protect these employees. (Note: Windscreens should not be used unless the scaffold is secured against the anticipated wind forces imposed.)

For Training

- To train employees involved in erecting, disassembling, moving, operating, repairing, maintaining, or inspecting scaffolds to recognize associated work hazards.

For Inspections

- To inspect scaffolds and scaffold components for visible defects before each work shift and after any occurrence which could affect the corrective actions.
- To inspect ropes on suspended scaffolds prior to each work shift and after every occurrence which could affect the structural integrity and to authorize prompt corrective actions.
- To inspect manila or plastic (or other synthetic) rope being used for top rails or midrails.

For Suspension Scaffolds

- To evaluate direct connections to support the load.
- To evaluate the need to secure two-point and multi-point scaffolds to prevent swaying.

For Erectors and Dismantlers

- To determine the feasibility and safety of providing fall protection and access.
- To train erectors and dismantlers to recognize associated work hazards.

For Scaffold Components

- To determine if a scaffold will be structurally sound when intermixing components from different manufacturers.
- To determine if galvanic action has affected the capacity when using components of dissimilar metals.

Tube And Coupler Scaffolds - Light Duty

Uniformly distributed load	Not to exceed 25 p.s.f.	
Post Spacing (longitudinal)	10 ft. 0 in.	
Post Spacing (transverse)	6 ft. 0 in.	
Working Levels	**Additional Planked Levels**	**Maximum Height**
1	8	125 ft.
2	4	125 ft.
3	0	91 ft. 0 in.

Tube And Coupler Scaffolds - Medium Duty

Uniformly distributed load	Not to exceed 50 p.s.f	
Post spacing (longitudinal)	8 ft. 0 in.	
Post spacing (transverse)	6 ft. 0 in.	
Working Levels	**Additional Planked Levels**	**Maximum Height**
1	6	125 ft.
2	0	78 ft. 0 in.

SILICA EXPOSURE CONTROL

Integrated Water Services, Inc.
(the Company)

Purpose

The purpose of this Exposure Control Plan (ECP) is to set out our approach to protecting workers from harmful exposure to airborne silica dust.

A combination of control measures will be required to achieve this objective. We commit to being diligent in our efforts to select the most effective control technologies available, and to ensure that the best practices as described in this ECP are followed at our worksites.

The work procedures we establish will protect not only our workers but all workers on our worksites.

Scope

This policy applies to all Company employees.

When work is performed by a subcontractor on a company site, the contractor's written safety program shall take precedence for their employees. However, subcontractors may adopt this procedure for their use.

Key Responsibilities

Due to the significant risk posed by respirable silica, it is critical that all personnel involved in operations that could potentially create silica dust take specific action to ensure that, as much as possible, a hazard is not created.

The Company is responsible for:

- Substitution of less hazardous products for those that contain crystalline silica.
- Ensuring that the materials (e.g., tools, equipment, personal protective equipment) and other resources (i.e., worker training materials) required to fully implement and maintain this exposure control plan (ECP) are readily available where and when they are required.
- Providing a job specific ECP for each project, which outlines in detail the work methods and practices that will be followed on each site. Considerations will include
- Availability and delivery of all required tools/equipment
- Scope and nature of grinding work to be conducted
- Control methods to be used and level of respiratory protection required
- Coordination plan
- Conducting a periodic review of the effectiveness of the ECP. This would include a review of the available dust-control technologies to ensure these are selected and used when practical.
- Initiating sampling of worker exposure to concrete dust when there are non-standard work practices for which the control methods to be used have not been proven to be adequately protective.
- Ensuring that all required tools, equipment, and personal protective equipment are readily available and used as required by the ECP.
- Ensuring supervisors and workers are educated and trained to an acceptable level of competency.
- Maintaining records of training, fit-test results, crew talks, and inspections (equipment, PPE, work methods/practices).

- Coordinating the work with the prime contractor and other employers to ensure a safe work environment.

Supervisors are responsible for:

- Obtaining a copy of the ECP from the employer, and making it available at the worksite
- Selecting, implementing, and documenting the appropriate site-specific control measures
- Providing adequate instruction to workers on the hazards of working with silica-containing materials (e.g., concrete) and on the precautions specified in the job-specific plan covering hazards at the location
- Ensuring that workers are using the proper respirators and have been fit-tested, and that the results are recorded
- Directing the work in a manner that ensures the risk to workers is minimized and adequately controlled
- Communicating with the prime contractor and other sub-contractors to ensure a safe work environment

Workers are responsible for:

- Knowing the hazards of silica dust exposure
- Using the assigned protective equipment in an effective and safe manner
- Setting up the operation in accordance with the site-specific plan
- Following established work procedures as directed by the supervisor
- Reporting any unsafe conditions or acts to the supervisor
- Knowing how and when to report exposure incidents

Silica Properties

Silica is the second most common mineral on earth and makes up nearly all of what we call “sand” and “rock.” Silica exists in many forms—one of these, “crystalline” silica (including quartz), is the most abundant and poses the greatest concern for human health. Some common materials that contain silica include:

- Rock and sand
- Topsoil and fill
- Concrete, cement, and mortar
- Masonry, brick, and tile
- Granite, sandstone, and slate
- Asphalt (containing rock and stone)
- Fibrous-cement board containing silica

Silica is a primary component of many common construction materials, and silica-containing dust can be generated during many construction activities, including:

- Abrasive blasting (e.g., of concrete structures)
- Jackhammering, chipping, or drilling rock or concrete
- Cutting brick or tiles
- Sawing or grinding concrete
- Tuck point grinding
- Road construction
- Loading, hauling, and dumping gravel

- Demolition of structures containing concrete
- Sweeping concrete dust

Unprotected workers performing these activities, or working in the vicinity, can be exposed to harmful levels of airborne silica. Workers in other industries can also be exposed to silica, for example in the manufacture of toothpaste or pottery, or when loading coal (which can contain quartz) into the hold of a ship.

Health Hazards
Exposure to silica has been shown to cause silicosis, lung cancer, pulmonary tuberculosis and other airway diseases. Crystalline silica dust can cause a disabling, sometimes fatal disease called silicosis. The fine particles are deposited in the lungs, causing thickening and scarring of the lung tissue. The scar tissue restricts the lungs' ability to extract oxygen from the air. This damage is permanent, but symptoms of the disease may not appear for many years.

A worker may develop any of three types of silicosis, depending on the concentrations of silica dust and the duration of exposure:

- Chronic silicosis—develops after 10 or more years of exposure to crystalline silica at relatively low concentrations
- Accelerated silicosis—develops 5 to 10 years after initial exposure to crystalline silica at high concentrations
- Acute silicosis—develops within a few weeks, or 4 to 5 years, after exposure to very high concentrations of crystalline silica

Initially, workers with silicosis may have no symptoms; however, as the disease progresses, a worker may experience:

- Shortness of breath
- Severe cough
- Weakness

These symptoms can worsen over time and lead to death. Exposure to silica has also been linked to other diseases, including bronchitis, tuberculosis, and lung cancer.

Procedures

The Company has procedures governing the storage, handling, use and disposal of silica if there is potential for exposure. The code of practice includes measures to be used to prevent the uncontrolled release of silica and the procedures to be followed if there is an uncontrolled release. Engineering controls such as ventilation or wet methods must be used to control silica-containing dusts.

Risk Identification, Assessment and Control
The potential for worker exposure to silica should be identified during the hazard assessment. A worker's exposure to silica is kept as low as reasonably achievable. Employees must not be exposed to airborne concentrations of silica in excess of 0.025 mg/cubic meter over an 8 hour time period. Atmospheric testing results should be assessed before a worker is exposed.

A key step in developing a silica exposure control plan is to identify the work activities that would put workers at risk of exposure.

- Work activities — that may generate airborne silica dust—for silica, the route of exposure is through the inhalation of airborne dust. The employer should have a qualified person review the planned work activities to identify those that may generate airborne silica.
- Identify workers at risk of exposure—For example, workers who finish concrete would be at greater risk of exposure than plumbers or electrical workers.
- Amount of exposure—some work activities generate more dust than others, and the amount of exposure should be estimated. Published resources are available that provide air sampling data and compare silica dust levels from various construction activities.
- Duration of exposure—Workers who grind concrete for a full shift would be at greater risk than workers jackhammering for an hour.

Control Options

Effective control options must be used to eliminate or reduce the risk to workers from the hazards of silica dust exposure. The following hierarchy of control measures must be followed:

- Elimination/substitution (e.g., using products with less silica or using work methods that would eliminate the need for surface grinding)
- Engineering controls (e.g., water, local exhaust ventilation, enclosure)
- Administrative controls (e.g., coordination of tasks with subcontractors, signage)
- The use of proper PPE such as gloves, coveralls and eye protection when exposed to silica. Personal protective equipment such as gloves, coveralls and eye protection will be used to control silica exposure.

Our firm commits to developing knowledge and expertise about these controls, and to establishing policies/procedures to protect workers from harmful exposure and to minimize reliance on respirators. Effective engineering controls such as HEPA vacuum attachments and wetting methods, which control silica dust at its source, are readily available. These controls have been proven to reduce airborne dust levels significantly when selected and operated in accordance with best practices. We know that engineering controls alone do not reduce airborne silica to safe levels; so in most cases other control measures, including respiratory protection, will be necessary.

If we take on a job that could release an unusually high amount of dust, and we are unsure of the adequacy of our control measures, we will conduct air sampling in order to ensure that control methods are protective.

We will reduce or eliminate worker exposure to silica dust by selecting a combination of the following controls listed in order of preference:

- Elimination and substitution
- Engineering
- Administrative
- Personal protective equipment

Elimination and Substitution

We recognize the importance of planning the work in order to minimize the amount of silica dust generated. During the project planning phase, we will advocate for the use of methods that reduce the need for cutting,

grinding, or drilling of concrete surfaces (e.g., formwork planning). Whenever possible, we will schedule work when concrete is still wet, because we know that much less dust is released at that time.

Engineering Control of Dust

Selecting an appropriate control measure depends on the specifics of the operation. In some cases, local exhaust ventilation (LEV) is more effective at controlling exposure (e.g., during grinding operations) than wetting methods. In a different application, wetting may be more effective (e.g., during cutting operations) than LEV. However, using LEV may reduce the amount of final cleaning required, as the silica dust is captured.

Our dust control systems may employ three well-established techniques:

- Local exhaust ventilation (LEV)
- Wet dust suppression (WDS)
- Restricting or isolating the work activity with barriers or full enclosures (this may be the only option where LEV or WDS is not practical or effective)

Local Exhaust Ventilation (LEV)

When LEV is used in our work, we will employ the following systems and safe work practices:

- Vacuum attachment systems to capture and control the dust at its source whenever possible.
- Dust control systems (used regularly and well maintained).
- Grinding wheels operated at the manufacturers' recommended rpm (operating in excess of this can generate significantly higher airborne dust levels).
- Retrofit shrouds or exhaust cowlings for corner grinding; use manufacturer-specified rpm speeds and a well-maintained HEPA vacuum.
- Diamond stone grinders, which allow for the use of a more efficient suction casing on the grinder, whenever practicable.
- HEPA or good quality, multi-stage vacuum units approved for use with silica dust. [The vacuum units should be capable of creating a target airflow of at least 70 cfm. This should achieve a face velocity at the shroud of about 1.3 m/s (260 fpm)—the higher the face velocity, the more dust captured at source.]
- Work planning, so that concrete grinding can be completed when wet (dust release can be significantly reduced).
- Good housekeeping work practices (for example, use vacuums with high-efficiency particulate air (HEPA) filters, or use wet sweeping).
- Train workers and supervisors on how to properly use and maintain the equipment.

Wet methods for Dust Control

When water spray systems are used in our work, we will follow these safe work practices:

- Pneumatic grinders will be used instead of electric-powered grinders if water is the method of control.
- Pressure and flow rate of water will be controlled in accordance with tool manufacturers' specifications (for cutting saws, a minimum of 0.5 liters of water per minute should be used).
- When sawing concrete or masonry, we will use only saws that provide water to the blade.
- Wet slurry will be cleaned from work surfaces when the work is completed, using a wet vacuum or wet sweeping.

Barriers and Enclosures

When barriers or enclosures are used in our work, we will follow these safe work practices:

- The site foreman will determine the type and design of barrier or enclosure (based on the work activity and the work area) and ensure it is constructed in accordance with the work plan. Barriers may be simple hazard-flagging ribbon or more restrictive hoarding.
- We will use commercially available negative air units when constructing a full enclosure.

Administrative Controls

We will follow these safe work practices:

- Exposure control plans and the site risk assessment/work plan will be submitted to the general contractor prior to the start of work.
- We will establish procedures for housekeeping, restricting work areas, personal hygiene, worker training, and supervision.
- As part of our project planning, we will assess when silica dust may be generated and plan ahead to eliminate or control the dust at the source. We recognize that awareness and planning are key factors in the prevention of silicosis.
- Warning signs will be posted to warn workers about the hazards of silica and to specify any protective equipment required (for example, respirators).
- Work schedules will be posted at the boundaries of work areas contaminated with silica dust.
- Work that generates silica dust will be conducted after hours, when access to other unprotected workers cannot be restricted.
- We will develop a site-specific exposure control plan to cover project-specific issues (e.g., scope of work, project location and site-specific hazards) and to be kept available at the worksite.

Personal Protective Equipment

Respiratory protection

- All workers who wear respirators will do so in adherence with our respirator program.
- Respirators must be selected based upon measured exposure levels and the assigned protection factor of respirators.
- Only approved respirators will be used.
- Workers who wear respirators will be clean-shaven. Filtering face piece respirators give little or no protection to workers with beards, and even a minor growth of stubble can severely reduce the effectiveness of respiratory protection.
- All workers who wear respirators will be fit-tested.
- Workers will be properly trained in the use of respirators, and a high standard of supervision, inspection, and maintenance will be followed.

Protective clothing

The Company will provide workers in a restricted area with protective clothing that protects other clothing worn by the worker from silica contamination, ensure that workers' street clothing is not contaminated by silica, and ensure that a worker does not leave a restricted area until the worker has been decontaminated.

Health monitoring

Exposures to airborne concentrations of Silica must be kept below the permissible exposure limits shown in 29 CFR 1910.1000 Table Z-3.

Full shift personal samples shall be representative of the employee's regular, daily exposure to silica.

Documentation
Records must be kept of the following:

- All workers who are exposed to respirable silica dust while on the job
- Worker education and training sessions
- Respirator fit-testing
- Equipment maintenance and repair
- Worksite inspections

The exposure control plan must be reviewed at least annually and updated as necessary by the employer, in consultation with the workplace health and safety committee or the worker health and safety representative.

Education and Training

A worker who may be exposed to silica is to be informed of the health hazards associated with exposure, is informed of measurements taken of airborne concentrations of harmful substances at the work site, and is trained in procedures developed by the Company to minimize worker exposure.

Training is required prior to using silica-containing materials or working in an environment known to contain airborne concentrations of Silica. Periodic refresher training is also required. We will train all employees who might encounter silica dust in their job role in the following:

- Hazards associated with exposure to silica dust
- The risks of exposure to silica
- Signs and symptoms of silica disease
- Safe work procedures to be followed (e.g., setup of enclosures, disposal of silica waste, personal decontamination)
- Use of respirators and other personal protective equipment (e.g., donning and doffing of personal protective equipment, and cleaning and maintenance of respirators)
- Use of control systems (e.g., LEV and wet methods)
- How to seek first aid (for example, the location and use of eyewash stations)
- How to report an exposure to silica dust

SITE-SPECIFIC SAFETY ORIENTATION

Integrated Water Services, Inc.
(the Company)

Purpose

The purpose of this site-specific safety orientation is to establish a minimum safety expectation for new and incoming employees. It is well known that the minimum expectation of management will be the maximum participation of the workforce.

Scope

This orientation must be provided to every new employee when they arrive on the job and before they start work.

When work is performed by a subcontractor on a company site, the contractor's written safety program shall take precedence for their employees. However, subcontractors may adopt this procedure for their use.

Key Responsibilities

Supervisors

- Provide the new employee with this orientation or assign your safety steward to perform the task.

Employees

- Listen to the information presented and ask questions if you don't understand something.

Procedure

Job Site Safety Orientation

Take the new employee on a walk around the jobsite and provide them with the following information as a way to help them become familiar with their new job.

Project Familiarization

Give the new employee basic information concerning the purpose and structure of the project. It should address items, such as the scope and purpose of the project; the size, composition and type of construction (e.g., poured concrete, steel frame, tilt-up, or masonry block); the duration; key project milestones and associated target completion dates; the owner and owner's representatives; are we the general contractor or are we a subcontractor; and who their boss is. This overall understanding gives the worker a sense of what is the 'bigger whole' to which they are contributing their specialized expertise.

Orientation of Workers

Each worker should complete the online safety orientation prior to beginning work, and they should reiterate the location safety support center so they can access our written safety program and procedures applicable to the project. The site-specific safety orientation should include the following:

- Safety rules – Explanation of the company and any owner/client safety responsibilities and policies.
- First-aid facilities — indicate where first aid facilities are located and how they are to be utilized.
- Accident reporting — explain the required procedures for reporting accidents and injuries.

- Toolbox meetings — state when and where they will be held, who is to attend, and that attendance is mandatory.
- Personal protective clothing and equipment — specify when such protective equipment is required for a work assignment, and when their use is mandatory.
- Reporting unsafe acts or hazardous conditions — encourage workers to report unsafe acts or hazardous conditions immediately to their supervisor so they can be corrected.
- Job Hazard Assessments — Explain how the JHA is used and when a JHA is required.
- Stop Work — It takes courage for a new employee to interrupt a job, but this orientation is the perfect opportunity to put it out there as an obligation. Explain that everybody is counting on one another to stop unsafe behaviors and/or conditions in order to go home safe every day.

Project Layout

The purpose of this element is to provide specific geographical information about the project and various aspects of the work. This allows the individual worker to understand where they are in relation to other phases of the project. Several important aspects of the site plan, as well as the project footprint, should be included in discussions. It is important to review the locations of, and safe access routes to and from, various areas throughout the project site. Key areas that need to be identified include:

Geographic Limits of the Project Site

Location of boundary lines/principle project work area.

Restricted entry areas, such as demolition zones.

Security locations or checkpoints, and storage and staging yards.

Adjacent property, structures, or other ongoing projects.

Environmental Concerns.

Hazardous elements.

Chemical spills and hazardous waste and trash disposal areas.

Location of the Right to Know center or Safety Data Sheets.

HazMat on site.

Protected areas and wildlife concerns.

Good housekeeping and material recycling practices.

Temporary Services.

Proximity to needed medical and emergency services and facilities.

Drinking water, showers, sanitation, toilets, and showers.

Electricity, gas, and telephone and cable lines.

Security, lighting, fences and gates, guards/dogs, and guard houses.

Trailer Layout.

Contractor's office and workers, suppliers, and visitors areas.

Tools, equipment, and storage areas.

Material Storage and Staging Areas.

Site warehouses, locked sheds, and outside storage areas.

Special provisions (fire protection, prevention, and environmental) for fuel service and storage.

Vehicular Traffic.

Worker arrival/departure times and parking areas, and visitor parking areas.

Material deliveries areas.

Suppliers (e.g., Postal, office supplies, lunch wagon, etc.).

Construction equipment (within the site) and emergency vehicle areas.

Internal traffic network, flow patterns, signs, signals and barricades, and temporary roads.

On-site worker transportation and equipment movement areas.

Pedestrian Traffic.

Visitors and temporary service areas.

Lunch/break areas.

Access to office/trailer facilities.

Project Nuisance Items.

Fugitive dust, fumes, and gases.

Vibration and blasting.

Storm water runoff and streams or rivers.

Traffic (local and highway) and noise.

Since some of these areas will change over the course of the project, particularly as the project moves closer to completion, it is important that the information be kept accurate and current. The planning and site layout process also facilitates the construction management process by taking the project team through the entire planning sequence in advance of the actual start of construction on the site.

Safety Responsibilities

The various safety roles of the key individuals and safety stewards within the project should be thoroughly outlined in relation to the overall safety program of the project. The specific duties of each individual worker should also be addressed.

The object of this element is to instruct the workers in the project of the safety expectations and goals, and the desired approach on how to achieve them. A worker should understand their role in the construction and safety process.

The Three Key Disciplines of Safety

At Integrated Water Services, our goal is to perform our work with no injuries. In order to reach this goal, we must do three things really well:

1. Have a good plan – Every job should have a plan that includes the right people, tools, and materials to get the job done safely and efficiently.
2. Identify and fix hazards – It's important for all of us to be aware of potential hazards that could contribute to an injury. If you spot a hazard, don't hesitate to report it or take action to fix it if you can.
3. Stop the job if something doesn't feel right – If you ever find yourself in a situation where something doesn't feel right, stop the job and talk with your co-workers.

Online Safety Orientation

Now that the new employee has been introduced to the job, they can return to the online safety orientation and get it completed before starting work.

SPILL PREVENTION & RESPONSE

Integrated Water Services, Inc.
(the Company)

Purpose

The purpose of this procedure is to communicate the Company Spill Response requirements. Each Company work site will develop a spill prevention and response plan based on the hazardous materials present on location and the threat those products present to people, wildlife, ground surface, and water bodies.

Scope

This procedure applies to all Company locations and Company controlled worksites.

When work is performed by a subcontractor on a company site, the contractor's written safety program shall take precedence for their employees. However, subcontractors may adopt this procedure for their use.

Requirements

Each work site spill prevention and response plan shall contain the following requirements.

- Chemical substances should be stored in proper containers to minimize the potential for a spill. Whenever possible, chemicals should be kept in closed containers and stored so they are not exposed to storm water.
- The program must identify chemicals used that may be potentially spilled or released. This will include both liquid chemicals used at our facilities or brought on to owner client sites.
- Spill kits must be adequate for any anticipated spills. A proper spill kit must contain the appropriate supplies for materials that may be spilled. Supplies must be easily accessible when required, and considerations must be made for both the type and quantity of materials. The contents of spill response kits shall be periodically assessed to ensure the availability of adequate spill response supplies and adjust inventory as necessary.
- The company shall ensure the availability of adequate spill response supplies by periodic inspection to assess their availability and adjust the inventory as necessary.
- Employees must be instructed on spill prevention and the proper response procedures for spilled materials. The training should include materials available for use, proper waste disposal and communication procedures.
- Areas where chemicals may be used or stored must be maintained using good housekeeping best management practices. This includes, but is not limited to clean and organized storage, labeling and secondary containment where necessary.
- Proper communication measures for employees to initiate in the event of a spill will be created on a site-by-site basis. Communication procedures will be based on type and quantity of materials spilled.
- Environmental spills shall be reported to environmental authorities when required. Reporting procedures will be based on type and quantity of materials spilled.
- Regulatory reporting shall only be completed by the Safety Director.

STORM WATER POLLUTION PREVENTION PLAN

Integrated Water Services, Inc.
(the Company)

Purpose

The Word version of this document is located in the Safety Department Procedures file. Please reach out to the Safety Director to obtain a Word copy of this plan.

The purpose of this Storm Water Pollution Prevention Plan (SWPPP) is to help guide projects through the SWPPP development process and help ensure that your SWPPP addresses all the necessary elements stated in your construction general permit. This template covers the SWPPP elements that most state construction general permits require, however, project managers are strongly encouraged to customize this template. There are two major reasons to customize this template:

- **To reflect the terms and conditions of your construction general permit; and**
- **To reflect the conditions at your site**

Some states might have their own SWPPP template. If so, use the state-suggested format. In such cases, this document and its template might provide useful background information.

Using this SWPPP Template

Each section of this template includes "instructions" and space for project information. You should read the instructions for each section before you complete that section. This template was developed in Word so that you can easily add tables and additional text. Some sections may require only a brief description while others may require several pages of explanation.

Tips for completing the SWPPP template

- If there is more than one construction operator for your project, consider coordinating the development of your SWPPP with the other operators.
- Multiple operators may share the same SWPPP, but make sure that responsibilities are clearly described.
- Modify this SWPPP template so that it addresses the requirements in your construction general permit and meets the needs of your project. Consider adding permit citations in the SWPPP when you address a specific permit requirement.

Storm Water Pollution Prevention Plan

for:

Insert Project Name
Insert Project Site Location/Address
Insert City, State, Zip Code
Insert Project Site Telephone Number (if applicable)

Operator(s):

Insert Company or Organization Name
Insert Name
Insert Address
Insert City, State, Zip Code
Insert Telephone Number
Insert Fax/Email

SWPPP Contact(s):

Insert Company or Organization Name
Insert Name
Insert Address
Insert City, State, Zip Code
Insert Telephone Number
Insert Fax/Email

SWPPP Preparation Date:

__ __/__ __/__ __ __ __

Estimated Project Dates:

Project Start Date: __ __ / __ __ / __ __ __ __
Project Completion Date: __ __ / __ __ / __ __ __ __

Contents

SECTION 1: SITE EVALUATION, ASSESSMENT, AND PLANNING 1
1.1 Project/Site Information 1
1.2 Contact Information/Responsible Parties 2
1.3 Nature and Sequence of Construction Activity 3
1.4 Soils, Slopes, Vegetation, and Current Drainage Patterns 4
1.5 Construction Site Estimates 5
1.6 Receiving Waters 5
1.7 Site Features and Sensitive Areas to be Protected 6
1.8 Potential Sources of Pollution 6
1.9 Endangered Species Certification 7
1.10 Historic Preservation 8
1.11 Applicable Federal, Tribal, State or Local Programs 8
1.12 Maps 9
SECTION 2: EROSION AND SEDIMENT CONTROL BMPS 10
2.1 Minimize Disturbed Area and Protect Natural Features and Soil 11
2.2 Phase Construction Activity 11
2.3 Control Stormwater Flowing onto and through the Project 12
2.4 Stabilize Soils 12
2.5 Protect Slopes 13
2.6 Protect Storm Drain Inlets 14
2.7 Establish Perimeter Controls and Sediment Barriers 15
2.8 Retain Sediment On-Site 15
2.9 Establish Stabilized Construction Exits 16
2.10 Additional BMPs 17
SECTION 3: GOOD HOUSEKEEPING BMPS 18
3.1 Material Handling and Waste Management 19
3.2 Establish Proper Building Material Staging Areas 20
3.3 Designate Washout Areas 20
3.4 Establish Proper Equipment/Vehicle Fueling and Maintenance Practices 21
3.5 Control Equipment/Vehicle Washing 22
3.6 Spill Prevention and Control Plan 22
3.7 Any Additional BMPs 23
3.8 Allowable Non-Stormwater Discharge Management 24
SECTION 4: SELECTING POST-CONSTRUCTION BMPs 26
SECTION 5: INSPECTIONS 28
5.1 Inspections 28
5.2 Delegation of Authority 29
5.3 Corrective Action Log 29
SECTION 6: RECORDKEEPING AND TRAINING 30
6.1 Recordkeeping 30

6.2 Log of Changes to the SWPPP 30
6.3 Training 31
SECTION 7: FINAL STABILIZATION 32
SECTION 8: CERTIFICATION AND NOTIFICATION 33
SWPPP APPENDICES 34
Appendix A – General Location Map
Appendix B – Site Maps
Appendix C – Construction General Permit
Appendix D – NOI and Acknowledgement Letter from EPA/State
Appendix E – Inspection Reports
Appendix F – Corrective Action Log (or in Part 5.3)
Appendix G – SWPPP Amendment Log (or in Part 6.2)
Appendix H – Subcontractor Certifications/Agreements
Appendix I – Grading and Stabilization Activities Log (or in Part 6.1)
Appendix J – Training Log
Appendix K – Delegation of Authority
Appendix L – Additional Information (i.e., Endangered Species and Historic Preservation Documentation)

SECTION 1: SITE EVALUATION, ASSESSMENT, AND PLANNING

1.1 Project/Site Information

Instructions:

- In this section, you can gather some basic site information that will be helpful to you later when you file for permit coverage.
- For more information, see *Developing Your Stormwater Pollution Prevention Plan: A SWPPP Guide for Construction Sites* (also known as the *SWPPP Guide*), Chapter 2
- Detailed information on determining your site's latitude and longitude can be found at www.epa.gov/npdes/stormwater/latlong

Project/Site Name: _____

Project Street/Location: _____

City: _____ State: _____ ZIP Code: _____

County or Similar Subdivision: _____

Latitude/Longitude (Use **one** of three possible formats, and specify method)

Latitude:	Longitude:
1. _ _ º _ _ ' _ _" N (degrees, minutes, seconds)	1. _ _ º _ _ ' _ _" W (degrees, minutes, seconds)
2. _ _ º _ _ . _ _' N (degrees, minutes, decimal)	2. _ _ º _ _ . _ _' W (degrees, minutes, decimal)
3. _ _ . _ _ _ _ º N (decimal)	3. _ _ . _ _ _ _ º W (decimal)

Method for determining latitude/longitude:

☐ USGS topographic map (specify scale: _____) ☐ EPA Web site ☐ GPS

☐ Other (please specify): _____

Is the project located in Indian country? ☐ Yes ☐ No

If yes, name of Reservation, or if not part of a Reservation, indicate "not applicable."_____

_____

Is this project considered a federal facility? ☐ Yes ☐ No

NPDES project or permit tracking number*:_____

**(This is the unique identifying number assigned to your project by your permitting authority after you have applied for coverage under the appropriate National Pollutant Discharge Elimination System (NPDES) construction general permit.)*

1.2 Contact Information/Responsible Parties

Instructions:

- List the operator(s), project managers, stormwater contact(s), and person or organization that prepared the SWPPP. Indicate respective responsibilities, where appropriate.
- Also, list subcontractors expected to work on-site. Notify subcontractors of stormwater requirements applicable to their work.
- See *SWPPP Guide*, Chapter 2.B.

Operator(s):

Insert Company or Organization Name:
Insert Name:
Insert Address:
Insert City, State, Zip Code:
Insert Telephone Number:
Insert Fax/Email:
Insert area of control (if more than one operator at site):
Repeat as necessary

Project Manager(s) or Site Supervisor(s):

Insert Company or Organization Name:
Insert Name:
Insert Address:
Insert City, State, Zip Code:
Insert Telephone Number:
Insert Fax/Email:
Insert area of control (if more than one operator at site) :
Repeat as necessary

SWPPP Contact(s):

Insert Company or Organization Name:
Insert Name:
Insert Address:
Insert City, State, Zip Code:
Insert Telephone Number:
Insert Fax/Email:

Insert area of control (if more than one operator at site) :
Repeat as necessary

This SWPPP was Prepared by:

Insert Company or Organization Name:
Insert Name:
Insert Address:
Insert City, State, Zip Code:
Insert Telephone Number:
Insert Fax/Email:

Subcontractor(s):

Insert Company or Organization Name:
Insert Name:
Insert Address:
Insert City, State, Zip Code:
Insert Telephone Number:
Insert Fax/Email:
Repeat as necessary

Emergency 24-Hour Contact:

Insert Company or Organization Name:
Insert Name:
Insert Telephone Number:

1.3 Nature and Sequence of Construction Activity

Instructions:

- Briefly describe the nature of the construction activity and approximate time frames (one or more paragraphs, depending on the nature and complexity of the project).
- For more information, see *SWPPP Guide*, Chapter 3.A.

Describe the general scope of the work for the project, major phases of construction, etc:

INSERT TEXT HERE

What is the function of the construction activity?

☐ Residential ☐ Commercial ☐ Industrial ☐ Road Construction ☐ Linear Utility

☐ Other (please specify):

Estimated Project Start Date: __ __ / __ __ / __ __ __ __

Estimated Project Completion Date: __ __ / __ __ / __ __ __ __

1.4 Soils, Slopes, Vegetation, and Current Drainage Patterns

Instructions:

- Describe the existing soil conditions at the construction site including soil types, slopes and slope lengths, drainage patterns, and other topographic features that might affect erosion and sediment control.
- Also, note any historic site contamination evident from existing site features and known past usage of the site.
- This information should also be included on your site maps (See *SWPPP Guide*, Chapter 3.C.).
- For more information, see *SWPPP Guide*, Chapter 3.A.

Soil type(s):

Slopes (describe current slopes and note any changes due to grading or fill activities):

Drainage Patterns (describe current drainage patterns and note any changes dues to grading or fill activities):

Vegetation:

Other:

1.5 Construction Site Estimates

Instructions:

- Estimate the area to be disturbed by excavation, grading, or other construction activities, including dedicated off-site borrow and fill areas.
- Calculate the percentage of impervious surface area before and after construction
- Calculate the runoff coefficients before and after construction.
- For more information, see *SWPPP Guide*, Chapter 3.A and Appendix C.

The following are estimates of the construction site.

Total project area:	acres
Construction site area to be disturbed:	acres
Percentage impervious area before construction:	%
Runoff coefficient before construction:	
Percentage impervious area after construction:	%
Runoff coefficient after construction	

1.6 Receiving Waters

Instructions:

- List the waterbody(s) that would receive stormwater from your site, including streams, rivers, lakes, coastal waters, and wetlands. Describe each as clearly as possible, such as *Mill Creek, a tributary to the Potomac River*, and so on.
- Indicate the location of all waters, including wetlands, on the site map.
- Note any stream crossings, if applicable.
- List the storm sewer system or drainage system that stormwater from your site could discharge to and the waterbody(s) that it ultimately discharges to.
- If any of the waterbodies above are impaired and/or subject to Total Maximum Daily Loads (TMDLs), please list the pollutants causing the impairment and any specific requirements in the TMDL(s) that are applicable to construction sites. Your SWPPP should specifically include measures to prevent the discharge of these pollutants.
- For more information, see *SWPPP Guide*, Chapter 3.A and 3.B.
- Also, for more information and a list of TMDL contacts and links by state, visit www.epa.gov/npdes/stormwater/tmdl.

Description of receiving waters:

Description of unique features that are to be preserved:

Describe measures to protect these features:

Description of storm sewer systems:

Description of impaired waters or waters subject to TMDLs:

Other:

1.7 Site Features and Sensitive Areas to be Protected

Instructions:

- Describe unique site features including streams, stream buffers, wetlands, specimen trees, natural vegetation, steep slopes, or highly erodible soils that are to be preserved.
- Describe measures to protect these features.
- Include these features and areas on your site maps.
- For more information, see *SWPPP Guide*, Chapter 3.A and 3.B.

1.8 Potential Sources of Pollution

Instructions:

- Identify and list all potential sources of sediment, which may reasonably be expected to affect the quality of stormwater discharges from the construction site.
- Identify and list all potential sources of pollution, other than sediment, which may reasonably be expected to affect the quality of stormwater discharges from the construction site.
- For more information, see *SWPPP Guide*, Chapter 3.A.

Potential sources of sediment to stormwater runoff:

INSERT TEXT OR TABLE HERE

Potential pollutants and sources, other than sediment, to stormwater runoff:

INSERT TEXT OR USE TABLE BELOW

Trade Name Material	Stormwater Pollutants	Location

1.9 Endangered Species Certification

Instructions:

- Before beginning construction, determine whether endangered or threatened species or their critical habitats are on or near your site.
- Adapt this section as needed for state or tribal endangered species requirements and, if applicable, document any measures deemed necessary to protect endangered or threatened species or their critical habitats.
- For more information on this topic, see *SWPPP Guide*, Chapter 3.B.
- Additional information on Endangered Species Act (ESA) provisions is at www.epa.gov/npdes/stormwater/esa

Are endangered or threatened species and critical habitats on or near the project area?

☐ Yes ☐ No

Describe how this determination was made:

INSERT TEXT HERE

If yes, describe the species and/or critical habitat:

INSERT TEXT HERE

If yes, describe or refer to documentation that determines the likelihood of an impact on

identified species and/or habitat and the steps taken to address that impact. (Note, if species are on or near your project site, EPA strongly recommends that the site operator work closely with the appropriate field office of the U.S. Fish and Wildlife Service or National Marine Fisheries Service. For concerns related to state or tribal listing of species, please contact a state or tribal official.)

INSERT TEXT HERE

1.10 Historic Preservation

Instructions:

- Before you begin construction, you should review federal and any applicable state, local, or tribal historic preservation laws and determine if there are historic sites on or near your project. If so, you might need to make adjustments to your construction plans or to your stormwater controls to ensure that these historic sites are not damaged.
- For more information, see *SWPPP Guide*, Chapter 3.B or contact your state or tribal historic preservation officer.

Are there any historic sites on or near the construction site?

☐ Yes ☐ No

Describe how this determination was made:

INSERT TEXT HERE

If yes, describe or refer to documentation that determines the likelihood of an impact on this historic site and the steps taken to address that impact.

INSERT TEXT HERE

1.11 Applicable Federal, Tribal, State or Local Programs

Instructions:

- Note other applicable federal, tribal, state or local soil and erosion control and stormwater management requirements that apply to your construction site.

INSERT TEXT HERE

1.12 Maps

Instructions:

- Attach site maps. For most projects, a series of site maps is recommended. The first should show the undeveloped site and its current features. An additional map or maps should be created to show the developed site or for more complicated sites show the major phases of development.

These maps should include the following:

- Direction(s) of stormwater flow and approximate slopes before and after major grading activities;
- Areas and timing of soil disturbance;
- Areas that will not be disturbed;
- Natural features to be preserved;
- Locations of major structural and non-structural BMPs identified in the SWPPP;
- Locations and timing of stabilization measures;
- Locations of off-site material, waste, borrow, or equipment storage areas;
- Locations of all waters of the United States, including wetlands;
- Locations where stormwater discharges to a surface water;
- Locations of storm drain inlets; and
- Areas where final stabilization has been accomplished.
- For more information, see *SWPPP Guide*, Chapter 3.C.

Include the site maps with the SWPPP.

SECTION 2: EROSION AND SEDIMENT CONTROL BMPS

Instructions:

- Describe the BMPs that will be implemented to control pollutants in stormwater discharges. For each major activity identified, do the following
  - ✓ Clearly describe appropriate control measures.
  - ✓ Describe the general sequence during the construction process in which the measures will be implemented.
  - ✓ Describe the maintenance and inspection procedures that will be used for that specific BMP.
  - ✓ Include protocols, thresholds, and schedules for cleaning, repairing, or replacing damaged or failing BMPs.
  - ✓ Identify staff responsible for maintaining BMPs.
  - ✓ (If your SWPPP is shared by multiple operators, indicate the operator responsible for each BMP.)
- Categorize each BMP under one of the following 10 areas of BMP activity as described below:
  - ***2.1 Minimize disturbed area and protect natural features and soil***
  - ***2.2 Phase Construction Activity***
  - ***2.3 Control Stormwater flowing onto and through the project***
  - ***2.4 Stabilize Soils***
  - ***2.5 Protect Slopes***
  - ***2.6 Protect Storm Drain Inlets***
  - ***2.7 Establish Perimeter Controls and Sediment Barriers***
  - ***2.8 Retain Sediment On-Site and Control Dewatering Practices***
  - ***2.9 Establish Stabilized Construction Exits***
  - ***2.10 Any Additional BMPs***
- Note the location of each BMP on your site map(s).
- For any structural BMPs, you should provide design specifications and details and refer to them. Attach them as appendices to the SWPPP or within the text of the SWPPP.
- For more information, see *SWPPP Guide*, Chapter 4.
- Consult your state's design manual or one of those listed in Appendix D of the *SWPPP Guide*.
- For more information or ideas on BMPs, see EPA's National Menu of BMPs http://www.epa.gov/npdes/stormwater/menuofbmps

2.1 Minimize Disturbed Area and Protect Natural Features and Soil

Instructions:

- Describe the areas that will be disturbed with each phase of construction and the methods (e.g., signs, fences) that you will use to protect those areas that should not be disturbed. Describe natural features identified earlier and how each will be protected during construction activity. Also describe how topsoil will be preserved. Include these areas and associated BMPs on your site map(s) also. (For more information, see *SWPPP Guide*, Chapter 4, ESC Principle 1.)
- Also, see EPA's *Preserving Natural Vegetation BMP Fact Sheet* at www.epa.gov/npdes/stormwater/menuofbmps/construction/perserve_veg

INSERT TEXT or TABLE HERE, include inspection and maintenance schedules as appropriate and staff responsible for maintenance

2.2 Phase Construction Activity

Instructions:

- Describe the intended construction sequencing and timing of major activities, including any opportunities for phasing grading and stabilization activities to minimize the overall amount of disturbed soil that will be subject to potential erosion at one time. Also, describe opportunities for timing grading and stabilization so that all or a majority of the soil disturbance occurs during a time of year with less erosion potential (i.e., during the dry or less windy season). (For more information, see *SWPPP Guide*, Chapter 4, ESC Principle 2.) It might be useful to develop a separate, detailed site map for each phase of construction.
- Also, see EPA's *Construction Sequencing BMP Fact Sheet* at http://www.epa.gov/npdes/stormwater/menuofbmps/construction/cons_seq)

- Phase I
  - Describe phase
  - Duration of phase (start date, end date)
  - List BMPs associated with this phase
  - Describe stabilization methods for this phase (describe any temporary stabilization methods that will be used before final stabilization)

- Phase II
  - Describe phase
  - Duration of phase (start date, end date)

- List BMPs associated with this phase
- Describe stabilization methods for this phase (describe any temporary stabilization methods that will be used before final stabilization)

Repeat as needed

2.3 Control Stormwater Flowing onto and through the Project

Instructions:

– Describe structural practices (e.g., diversions, berms, ditches, storage basins) including design specifications and details used to divert flows from exposed soils, retain or detain flows, or otherwise limit runoff and the discharge of pollutants from exposed areas of the site. (For more information, see *SWPPP Guide*, Chapter 4, ESC Principle 3.)

BMP Description:	
Installation Schedule:	
Maintenance and Inspection:	
Responsible Staff:	

***BMP Description*:**	
***Installation Schedule*:**	
***Maintenance and Inspection*:**	
***Responsible Staff*:**	

Repeat as needed

2.4 Stabilize Soils

Instructions:

– Describe controls (e.g., interim seeding with native vegetation, hydroseeding) to stabilize exposed soils where construction activities have temporarily or permanently ceased. Also describe measures to control dust generation. Avoid using impervious surfaces for stabilization whenever possible. (For more information, see *SWPPP Guide*, Chapter 4, ESC Principle 4.)

– Also, see EPA's *Seeding BMP Fact Sheet* at www.epa.gov/npdes/stormwater/menuofbmps/construction/seeding

BMP Description:	
☐ ***Permanent***	☐ ***Temporary***
Installation Schedule:	
Maintenance and Inspection:	
Responsible Staff:	

BMP Description:	
☐ ***Permanent***	☐ ***Temporary***
Installation Schedule:	
Maintenance and Inspection:	
Responsible Staff:	

Repeat as needed

2.5 Protect Slopes

Instructions:

- Describe controls (e.g., erosion control blankets, tackifiers) including design specifications and details that will be implemented to protect all slopes. (For more information, see *SWPPP Guide*, Chapter 4, ESC Principle 5.)
- Also, see EPA's *Geotextiles BMP Fact Sheet* at www.epa.gov/npdes/stormwater/menuofbmps/construction/geotextiles

BMP Description:	
Installation Schedule:	
Maintenance and Inspection:	
Responsible Staff:	

BMP Description:	
Installation Schedule:	
Maintenance and	

Inspection:	
Responsible Staff:	

Repeat as needed

2.6 Protect Storm Drain Inlets

Instructions:

- Describe controls (e.g., inserts, rock-filled bags, or block and gravel) including design specifications and details that will be implemented to protect all inlets receiving stormwater from the project during the entire project. (For more information, see *SWPPP Guide*, Chapter 4, ESC Principle 6.)
- Also, see EPA's *Storm Drain Inlet Protection BMP Fact Sheet* at www.epa.gov/npdes/stormwater/menuofbmps/construction/storm_drain

BMP Description:	
Installation Schedule:	
Maintenance and Inspection:	
Responsible Staff:	

BMP Description:	
Installation Schedule:	
Maintenance and Inspection:	
Responsible Staff:	

Repeat as needed

2.7 Establish Perimeter Controls and Sediment Barriers

Instructions:

- Describe structural practices (e.g., silt fences or fiber rolls) including design specifications and details to filter and trap sediment before it leaves the construction site. (For more information, see *SWPPP Guide*, Chapter 4, ESC Principle 7.)
- Also see, EPA's *Silt Fence BMP Fact Sheet* at www.epa.gov/npdes/stormwater/menuofbmps/construction/silt_fences, or *Fiber Rolls BMP Fact Sheet* at www.epa.gov/npdes/stormwater/menuofbmps/construction/fiber_rolls

BMP Description:	
Installation Schedule:	
Maintenance and Inspection:	
Responsible Staff:	

BMP Description:	
Installation Schedule:	
Maintenance and Inspection:	
Responsible Staff:	

Repeat as needed

2.8 Retain Sediment On-Site

Instructions:

- Describe sediment control practices (e.g., sediment trap or sediment basin), including design specifications and details (volume, dimensions, outlet structure) that will be implemented at the construction site to retain sediments on-site. (For more information, see *SWPPP Guide*, Chapter 4, ESC Principle 8.)
- Also, see EPA's *Sediment Basin BMP Fact Sheet* at www.epa.gov/npdes/stormwater/menuofbmps/construction/sediment_basins

BMP Description:	
Installation Schedule:	
Maintenance and	

Inspection:	
Responsible Staff:	

BMP Description:	
Installation Schedule:	
Maintenance and Inspection:	
Responsible Staff:	

Repeat as needed

2.9 Establish Stabilized Construction Exits

Instructions:

- Describe location(s) of vehicle entrance(s) and exit(s), procedures to remove accumulated sediment off-site (e.g., vehicle tracking), and stabilization practices (e.g., stone pads or wash racks or both) to minimize off-site vehicle tracking of sediments and discharges to stormwater. (For more information, see *SWPPP Guide*, Chapter 4, ESC Principle 9.)
- Also, see EPA's *Construction Entrances BMP Fact Sheet* at www.epa.gov/npdes/stormwater/menuofbmps/construction/cons_entrance

BMP Description:	
Installation Schedule:	
Maintenance and Inspection:	
Responsible Staff:	

BMP Description:	
Installation Schedule:	
Maintenance and Inspection:	
Responsible Staff:	

Repeat as needed

2.10 Additional BMPs

Instructions:

– Describe additional BMPs that do not fit into the above categories.

BMP Description:	
Installation Schedule:	
Maintenance and Inspection:	
Responsible Staff:	

BMP Description:	
Installation Schedule:	
Maintenance and Inspection:	
Responsible Staff:	

Repeat as needed

SECTION 3: GOOD HOUSEKEEPING BMPS

Instructions:

- Describe the key good housekeeping and pollution prevention (P2) BMPs that will be implemented to control pollutants in stormwater.
- Categorize each good housekeeping and pollution prevention (P2) BMP under one of the following seven categories:
  - ***3.1 Material Handling and Waste Management***
  - ***3.2 Establish Proper Building Material Staging Areas***
  - ***3.3 Designate Washout Areas***
  - ***3.4 Establish Proper Equipment/Vehicle Fueling and Maintenance Practices***
  - ***3.5 Allowable Non-Stormwater Discharges and Control Equipment/Vehicle Washing***
  - ***3.6 Spill Prevention and Control Plan***
  - ***3.7 Any Additional BMPs***
- For more information, see *SWPPP Guide*, Chapter 5.
- Consult your state's design manual or resources in Appendix D of the *SWPPP Guide*.
- For more information or ideas on BMPs, see EPA's National Menu of BMPs http://www.epa.gov/npdes/stormwater/menuofbmps

3.1 Material Handling and Waste Management

Instructions:

- Describe measures (e.g., trash disposal, sanitary wastes, recycling, and proper material handling) to prevent the discharge of solid materials to receiving waters, except as authorized by a permit issued under section 404 of the CWA (For more information, see *SWPPP Guide*, Chapter 5, P2 Principle 1.)
- Also, see EPA's *General Construction Site Waste Management BMP Fact Sheet* at www.epa.gov/npdes/stormwater/menuofbmps/construction/cons_wasteman

BMP Description:	
Installation Schedule:	
Maintenance and Inspection:	
Responsible Staff:	

BMP Description:	
Installation Schedule:	
Maintenance and Inspection:	
Responsible Staff:	

Repeat as needed

3.2 Establish Proper Building Material Staging Areas

Instructions:

- Describe construction materials expected to be stored on-site and procedures for storage of materials to minimize exposure of the materials to stormwater. (For more information, see *SWPPP Guide*, Chapter 5, P2 Principle 2.)

BMP Description:	
Installation Schedule:	
Maintenance and Inspection:	
Responsible Staff:	

BMP Description:	
Installation Schedule:	
Maintenance and Inspection:	
Responsible Staff:	

Repeat as needed

3.3 Designate Washout Areas

Instructions:

- Describe location(s) and controls to eliminate the potential for discharges from washout areas for concrete mixers, paint, stucco, and so on. (For more information, see *SWPPP Guide*, Chapter 5, P2 Principle 3.)
- Also, see EPA's *Concrete Washout BMP Fact Sheet* at www.epa.gov/npdes/stormwater/menuofbmps/construction/concrete_wash

BMP Description:	
Installation Schedule:	
Maintenance and Inspection:	
Responsible Staff:	

BMP Description:	
Installation Schedule:	
Maintenance and Inspection:	
Responsible Staff:	

Repeat as needed

3.4 Establish Proper Equipment/Vehicle Fueling and Maintenance Practices

Instructions:

- Describe equipment/vehicle fueling and maintenance practices that will be implemented to control pollutants to stormwater (e.g., secondary containment, drip pans, and spill kits) (For more information, see *SWPPP Guide*, Chapter 5, P2 Principle 4.)
- Also, see EPA's *Vehicle Maintenance and Washing Areas BMP Fact Sheet* at www.epa.gov/npdes/stormwater/menuofbmps/construction/vehicile_maintain

BMP Description:	
Installation Schedule:	
Maintenance and Inspection:	
Responsible Staff:	

BMP Description:	
Installation Schedule:	
Maintenance and Inspection:	
Responsible Staff:	

Repeat as needed

3.5 Control Equipment/Vehicle Washing

Instructions:

- Describe equipment/vehicle washing practices that will be implemented to control pollutants to stormwater. (For more information, see *SWPPP Guide*, Chapter 5, P2 Principle 5.)
- Also, see EPA's *Vehicle Maintenance and Washing Areas BMP Fact Sheet* at www.epa.gov/npdes/stormwater/menuofbmps/construction/vehicile_maintain

BMP Description:	
Installation Schedule:	
Maintenance and Inspection:	
Responsible Staff:	

BMP Description:	
Installation Schedule:	
Maintenance and Inspection:	
Responsible Staff:	

Repeat as needed

3.6 Spill Prevention and Control Plan

Instructions:

- Describe the spill prevention and control plan to include ways to reduce the chance of spills, stop the source of spills, contain and clean up spills, dispose of materials contaminated by spills, and train personnel responsible for spill prevention and control. (For more information, see *SWPPP Guide*, Chapter 5, P2 Principle 6.)
- Also, see EPA's *Spill Prevention and Control Plan BMP Fact sheet* at www.epa.gov/npdes/stormwater/menuofbmps/construction/spill_control

INSERT TEXT HERE or REFERENCE ATTACHMENT

3.7 Any Additional BMPs

Instructions:

- Describe any additional BMPs that do not fit into the above categories. Indicate the problem they are intended to address.

BMP Description:	
Installation Schedule:	
Maintenance and Inspection:	
Responsible Staff:	

BMP Description:	
Installation Schedule:	
Maintenance and Inspection:	
Responsible Staff:	

Repeat as needed

3.8 Allowable Non-Stormwater Discharge Management

Instructions:

- Identify all allowable sources of non-stormwater discharges that are not identified. The allowable non-stormwater discharges identified might include the following (see your permit for an exact list):
  - ✓ Waters used to wash vehicles where detergents are not used
  - ✓ Water used to control dust
  - ✓ Potable water including uncontaminated water line flushings
  - ✓ Routine external building wash down that does not use detergents
  - ✓ Pavement wash waters where spills or leaks of toxic or hazardous materials have not occurred (unless all spilled material has been removed) and where detergents are not used
  - ✓ Uncontaminated air conditioning or compressor condensate
  - ✓ Uncontaminated ground water or spring water
  - ✓ Foundation or footing drains where flows are not contaminated with process materials such as solvents
  - ✓ Uncontaminated excavation dewatering
  - ✓ Landscape irrigation
- Identify measures used to eliminate or reduce these discharges and the BMPs used to prevent them from becoming contaminated.
- For more information, see *SWPPP Guide*, Chapter 3.A.

List allowable non-stormwater discharges and the measures used to eliminate or reduce them and to prevent them from becoming contaminated:

BMP Description:	
Installation Schedule:	
Maintenance and Inspection:	
Responsible Staff:	

BMP Description:	
Installation Schedule:	
Maintenance and Inspection:	
Responsible Staff:	

Repeat as needed

INTEGRATED WATER SERVICES

SECTION 4: SELECTING POST-CONSTRUCTION BMPs

Instructions:

- Describe all post-construction stormwater management measures that will be installed during the construction process to control pollutants in stormwater discharges after construction operations have been completed. Examples of post-construction BMPs include the following:
  - ✓ Biofilters
  - ✓ Detention/retention devices
  - ✓ Earth dikes, drainage swales, and lined ditches
  - ✓ Infiltration basins
  - ✓ Porous pavement
  - ✓ Other proprietary permanent structural BMPs
  - ✓ Outlet protection/velocity dissipation devices
  - ✓ Slope protection
  - ✓ Vegetated strips and/or swales
- Identify any applicable federal, state, local, or tribal requirements for design or installation.
- Describe how low-impact designs or smart growth considerations have been incorporated into the design.
- For any structural BMPs, you should have design specifications and details and refer to them. Attach them as appendices to the SWPPP or within the text of the SWPPP.
- For more information on this topic, see your state's stormwater manual.
- You might also want to consult one of the references listed in Appendix D of the *SWPPP Guide*.
- Visit the post-construction section of EPA's Menu of BMPs at: www.epa.gov/npes/menuofbmps

BMP Description:	
Installation Schedule:	
Maintenance and Inspection:	
Responsible Staff:	

BMP Description:	
Installation Schedule:	
Maintenance and Inspection:	
Responsible Staff:	

Repeat as needed

SECTION 5: INSPECTIONS

5.1 Inspections

Instructions:

- Identify the individual(s) responsible for conducting inspections and describe their qualifications. Reference or attach the inspection form that will be used.
- Describe the frequency that inspections will occur at your site including any correlations to storm frequency and intensity.
- Note that inspection details for particular BMPs should be included in Sections 2 and 3.
- You should also document the repairs and maintenance that you undertake as a result of your inspections. These actions can be documented in the corrective action log described in Part 5.3 below.
- For more on this topic, see *SWPPP Guide*, Chapters 6 and 8.
- Also, see suggested inspection form in Appendix B of the *SWPPP Guide*.

1. ***Inspection Personnel:*** Identify the person(s) who will be responsible for conducting inspections and describe their qualifications:

2. ***Inspection Schedule and Procedures:***

   Describe the inspection schedules and procedures you have developed for your site (include frequency of inspections for each BMP or group of BMPs, indicate when you will inspect, e.g., before/during/and after rain events, spot inspections):

   Describe the general procedures for correcting problems when they are identified. Include responsible staff and time frames for making corrections:

   Attach a copy of the inspection report you will use for your site.
   REFERENCE ATTACHMENT

5.2 Delegation of Authority

Instructions:

- Identify the individual(s) or specifically describe the position where the construction site operator has delegated authority for the purposes of signing inspection reports, certifications, or other information.
- Attach the delegation of authority form that will be used.
- For more on this topic, see *SWPPP Guide*, Chapter 7.

Duly Authorized Representative(s) or Position(s):

Insert Company or Organization Name:
Insert Name:
Insert Position:
Insert Address:
Insert City, State, Zip Code:
Insert Telephone Number:
Insert Fax/Email:

Attach a copy of the signed delegation of authority form in Appendix K.

5.3 Corrective Action Log

Instructions:

- Create here, or as an attachment, a corrective action log. This log should describe repair, replacement, and maintenance of BMPs undertaken as a result of the inspections and maintenance procedures described above. Actions related to the findings of inspections should reference the specific inspection report.
- This log should describe actions taken, date completed, and note the person that completed the work.

Corrective Action Log:
INSERT LOG HERE or REFERENCE ATTACHMENT

SECTION 6: RECORDKEEPING AND TRAINING

6.1 Recordkeeping

Instructions:

- The following is a list of records you should keep at your project site available for inspectors to review:
- Dates of grading, construction activity, and stabilization (which is covered in Sections 2 and 3)
- A copy of the construction general permit (attach)
- The signed and certified NOI form or permit application form (attach)
- A copy of the letter from EPA or/the state notifying you of their receipt of your complete NOI/application (attach)
- Inspection reports (attach)
- Records relating to endangered species and historic preservation (attach)
- Check your permit for additional details
- For more on this subject, see *SWPPP Guide*, Chapter 6.C.

Records will be retained for a minimum period of at least 3 years after the permit is terminated.

Date(s) when major grading activities occur:
INSERT LOG HERE or REFERENCE ATTACHMENT
Date(s) when construction activities temporarily or permanently cease on a portion of the site:
INSERT LOG HERE or REFERENCE ATTACHMENT
Date(s) when an area is either temporarily or permanently stabilized:
INSERT LOG HERE or REFERENCE ATTACHMENT

6.2 Log of Changes to the SWPPP

Instructions:

- Create a log here, or as an attachment, of changes and updates to the SWPPP. You should include additions of new BMPs, replacement of failed BMPs, significant changes in the activities or their timing on the project, changes in personnel, changes in inspection and maintenance procedures, updates to site maps, and so on.

Log of changes and updates to the SWPPP
INSERT LOG HERE or REFERENCE ATTACHMENT

6.3 Training

Instructions:

- Training your staff and subcontractors is an effective BMP. As with the other steps you take to prevent stormwater problems at your site, you should document the training that you conduct for your staff, for those with specific stormwater responsibilities (e.g. installing, inspecting, and maintaining BMPs), and for subcontractors.
- Include dates, number of attendees, subjects covered, and length of training.
- For more on this subject, see *SWPPP Guide*, Chapter 8.

Individual(s) Responsible for Training:
INSERT TEXT or TABLE HERE
Describe Training Conducted:

- General stormwater and BMP awareness training for staff and subcontractors:
- Detailed training for staff and subcontractors with specific stormwater responsibilities:

SECTION 7: FINAL STABILIZATION

Instructions:

- Describe procedures for final stabilization. If you complete major construction activities on part of your site, you can document your final stabilization efforts for that portion of the site. Many permits will allow you to then discontinue inspection activities in these areas (be sure to check your permit for exact requirements). You can amend or add to this section as areas of your project are finally stabilized.
- Update your site plans to indicate areas that have achieved final stabilization.
- Note that dates for areas that have achieved final stabilization should be included in Section 6, Part 6.1 of this SWPPP.
- For more on this topic, see *SWPPP Guide*, Chapter 9.

BMP Description:	
Installation Schedule:	
Maintenance and Inspection:	
Responsible Staff:	

BMP Description:	
Installation Schedule:	
Maintenance and Inspection:	
Responsible Staff:	

Repeat as needed

SECTION 8: CERTIFICATION AND NOTIFICATION

Instructions:

- The SWPPP should be signed and certified by the construction operator(s). Attach a copy of the NOI and permit authorization letter received from EPA or the state in Appendix D.

I certify under penalty of law that this document and all attachments were prepared under my direction or supervision in accordance with a system designed to assure that qualified personnel properly gathered and evaluated the information submitted. Based on my inquiry of the person or persons who manage the system, or those persons directly responsible for gathering the information, the information submitted is, to the best of my knowledge and belief, true, accurate, and complete. I am aware that there are significant penalties for submitting false information, including the possibility of fine and imprisonment for knowing violations.

Name: _____ Title: _____

Signature: _____ Date: _____

Repeat as needed for multiple construction operators at the site

SWPPP APPENDICES

Attach the following documentation to the SWPPP:

Appendix A – General Location Map

Appendix B – Site Maps

Appendix C – Construction General Permit

Appendix D – NOI and Acknowledgement Letter from EPA/State

Appendix E – Inspection Reports

Appendix F – Corrective Action Log (or in Part 5.3)

Appendix G – SWPPP Amendment Log (or in Part 6.2)

Appendix H – Subcontractor Certifications/Agreements

Appendix I – Grading and Stabilization Activities Log (or in Part 6.1)

Appendix J – Training Log

Appendix K – Delegation of Authority

Appendix L – Additional Information (i.e., Endangered Species and Historic Preservation Documentation)

Appendix F – *Sample* Corrective Action Log

Project Name:
SWPPP Contact:

Inspection Date	Inspector Name(s)	Description of BMP Deficiency	Corrective Action Needed (including planned date/responsible person)	Date Action Taken/Responsible person

Inspection Date	Inspector Name(s)	Description of BMP Deficiency	Corrective Action Needed (including planned date/responsible person)	Date Action Taken/Responsible person

Appendix G – *Sample* SWPPP Amendment Log

Project Name:
SWPPP Contact:

Amendment No.	Description of the Amendment	Date of Amendment	Amendment Prepared by [Name(s) and Title]

Amendment No.	Description of the Amendment	Date of Amendment	Amendment Prepared by [Name(s) and Title]

Appendix H – *Sample* Subcontractor Certifications/Agreements

SUBCONTRACTOR CERTIFICATION
STORMWATER POLLUTION PREVENTION PLAN

Project Number: _____

Project Title: _____

Operator(s): _____

As a subcontractor, you are required to comply with the Stormwater Pollution Prevention Plan (SWPPP) for any work that you perform on-site. Any person or group who violates any condition of the SWPPP may be subject to substantial penalties or loss of contract. You are encouraged to advise each of your employees working on this project of the requirements of the SWPPP. A copy of the SWPPP is available for your review at the office trailer.

Each subcontractor engaged in activities at the construction site that could impact stormwater must be identified and sign the following certification statement:

I certify under the penalty of law that I have read and understand the terms and conditions of the SWPPP for the above designated project and agree to follow the BMPs and practices described in the SWPPP.

This certification is hereby signed in reference to the above named project:

Company: _____

Address: _____

Telephone Number: _____

Type of construction service to be provided: _____

_____

_____

Signature: _____

INTEGRATED WATER SERVICES

Title: _____

Date: _____

Appendix I – *Sample* Grading and Stabilization Activities Log

Project Name:
SWPPP Contact:

Date Grading Activity Initiated	Description of Grading Activity	Date Grading Activity Ceased (Indicate Temporary or Permanent)	Date When Stabilization Measures are Initiated	Description of Stabilization Measure and Location

Date Grading Activity Initiated	Description of Grading Activity	Date Grading Activity Ceased (Indicate Temporary or Permanent)	Date When Stabilization Measures are Initiated	Description of Stabilization Measure and Location

Appendix J – *Sample* SWPPP Training Log

Stormwater Pollution Prevention Training Log

Project Name:

Project Location:

Instructor's Name(s):

Instructor's Title(s):

Course Location: _____ Date: _____

Course Length (hours): _____

Stormwater Training Topic: *(check as appropriate)*

- ❑ **Erosion Control BMPs**
- ❑ **Emergency Procedures**
- ❑ **Sediment Control BMPs**
- ❑ **Good Housekeeping BMPs**
- ❑ **Non-Stormwater BMPs**

Specific Training Objective:_____

_____

Attendee Roster: *(attach additional pages as necessary)*

No.	Name of Attendee	Company
1		
2		
3		
4		
5		
6		
7		
8		
9		

10		

Appendix K – *Sample* Delegation of Authority Form

Delegation of Authority

I, _____ (name), hereby designate the person or specifically described position below to be a duly authorized representative for the purpose of overseeing compliance with environmental requirements, including the Construction General Permit, at the _____ construction site. The designee is authorized to sign any reports, stormwater pollution prevention plans and all other documents required by the permit.

_____ (name of person or position)
_____ (company)
_____ (address)
_____ (city, state, zip)
_____ (phone)

By signing this authorization, I confirm that I meet the requirements to make such a designation as set forth in _____ (Reference State Permit), and that the designee above meets the definition of a "duly authorized representative" as set forth in _____ (Reference State Permit).

I certify under penalty of law that this document and all attachments were prepared under my direction or supervision in accordance with a system designed to assure that qualified personnel properly gathered and evaluated the information submitted. Based on my inquiry of the person or persons who manage the system, or those persons directly responsible for gathering the information, the information submitted is, to the best of my knowledge and belief, true, accurate, and complete. I am aware that there are significant penalties for submitting false information, including the possibility of fine and imprisonment for knowing violations.

Name: _____

Company: _____

Title: _____

Signature: _____

Date: _____

INTEGRATED WATER SERVICES

SUBCONTRACTOR SAFETY MANAGEMENT PLAN

Integrated Water Services, Inc.
(the Company)

Purpose

The purpose of this program is to ensure that Integrated Water Services continues to improve subcontractor health, safety, and environmental performance and to establish a standard for pre-qualification, evaluation/selection and development of our subcontractors.

Scope

This program applies to all Company locations that use subcontractors.

General Requirements

All Integrated Water Services subcontractors are to be managed in accordance with this program.

The use of subcontractors must be pre-approved by the Company. Approval requirements include:

- A formal safety review of the subcontractor performed by the Company safety department.
- The scope of the review will be commensurate with the hazards and risk exposure.
- Subcontractors have been/will be oriented to the safety policies, expectations, and requirements of the Company.
- The subcontractor agrees to abide by our Drug and Alcohol policy and onsite safety rules throughout the duration of the work.

Any subcontractor that has a "Non-Approved" safety status will not be used on any Company site.

Procedure

Pre-Qualification of Subcontractors
Subcontractors will be pre-qualified by reviewing their safety programs, safety training documents, and safety statistics. The Company will use a combination of safety metrics to prequalify subcontractors as shown below.

Safety Metrics for Selecting Subcontractors
Acceptable safety metrics will be used as criteria for prequalifying and selecting subcontractors in the following manner. Key performance indicators such as the TRIR, EMR, LTIR and Fatality rates shall be reviewed (see form). The safety metrics and scoring will consider:

- Company Subcontractor Safety Pre-Qualification Form responses and subcontractor safety program documents review 60% (Rated from 0-60 total points)
- Subcontractor safety training documents review 20% (Rated from 0-20 total points)
- Subcontractor safety statistics review 20% (Rated from 0-20 total points)

Evaluation Rating and Acceptance
The subcontractor rating system will have three designations:

- Equal to or Greater than 90 points = Green Light.
- Between 75 and 89 points = Orange Light- Mitigation plan must be documented and approved by the Company Safety department.
- Less than 75 points = Red Light – must subscribe to BSafe.

- No formal safety management system= Red Light – must subscribe to BSafe

Once each subcontractor has been evaluated and scored, the Company safety team will provide management with the scores/ranking.

Integrated Water Services reserves the right to change a subcontractor's status to "Non-Approved" if the subcontractor shows insufficient progress towards accepted mitigation plan or other agreed-upon criteria.

Subcontractor Involvement
Contractors are required to follow or implement the work practices and systems described below while performing work at Company worksites:

- Attend the online Subcontractor Safety Orientation
- Subcontractors are required to conduct a Pre-Job Safety Meeting with the onsite IWS crews in attendance, including any pre-job meeting or kick-off meeting provided by IWS prior to any work beginning
- Monitor employees for substance abuse and report nonconformities to the Company
- Ensure personnel have the required training and competency for their work and provide IWS with a training matrix or certificates that confirm the same
- Included in the Company tailgate safety meetings, job safety analysis or hazard assessments and on-the-job safety inspections
- Perform a pre-job safety inspection that includes equipment and work area
- Participate in the Good Catch recognition program
- Report all injuries, spills, property damage incidents and near misses
- Comply with onsite and Owner/Client safety rules
- Implement Company safety practices and processes as applicable
- Clean up and restore the worksite each day
- Always ensure compliance with regulations
- Post job-safety performance reviews - shall be conducted for subcontractors based on their adherence to the above requirements, safety key performance indicators and other agreed-upon requirements.

Subcontractor Pre-Qualification Questionnaire
The subcontractor will be required to fill out an electronic safety pre-qualification form located in the SSM tab at www.iws.support or by going to this link: https://iws.jotform.com/240445981219056.

TRAFFIC CONTROL

Integrated Water Services, Inc.
(the Company)

Purpose

The purpose of the program is to prescribe rules and establish minimum requirements for traffic control.

Scope

This procedure represents the minimum traffic control requirements for all workers whether employees or contractors who are providing services on a Company controlled site.

When work is performed by a subcontractor on a company site, the contractor's written safety program shall take precedence for their employees. However, subcontractors may adopt this procedure for their use.

Key Responsibilities

Managers and Supervisors

- Managers and supervisors are responsible for ensuring that all employees, and/or contractors have been trained in the procedures, equipment and PPE associated with traffic control.

Employees

- Employees are responsible for following this program.

Procedure

- Pedestrians have the right-of-way. In all instances on the work site, pedestrian traffic has the right-of-way.
- The use of signs, barricades, and other control measures shall be used to the extent necessary to protect workers from traffic hazards. Employees struck by vehicles or mobile equipment account for many work zone injuries or fatalities. Work zones should be marked by traffic control devices such as:
    - Signals
    - Message boards
    - Cones
    - Barricades
    - Delineator Posts
    - Flashing Lights
    - Flares
    - Conspicuously identified pilot vehicles
    - Speed Restrictions
- Traffic control personnel must wear high visibility work vests. Workers exposed to traffic must be attired in bright, highly visible apparel. See OSHA Safety Vest Classification Table.
    - **ANSI Class 2 Safety Vests:** These safety vests are required for workers near traffic between 25-50 mph, heavy machinery, inclement weather, and low visibility conditions. ANSI class 2 vests are the most commonly required safety vests. You can also find ANSI class 2 jackets and t-shirts.
    - **ANSI Class 3 Safety Vests:** Class 3 vests are required for workers near traffic exceeding 50 mph and very dark or "no visibility" conditions. These traffic safety vests have longer sleeves than class 2 vests, in order to meet the requirements for hi-viz and reflective material. In

addition to vests, ANSI class 3 apparel can include safety jackets and long-sleeve shirts. Wearing an ANSI class 2 safety vest with ANSI class E safety pants together qualifies as an ANSI class 3 outfit.

Provisions of Flaggers to Direct Traffic – When work activity occurs on or adjacent to a surface being used by the public, it is required that a flagger is used to direct traffic.

- Flaggers are provided with proper hand-signaling devices. Hand-signaling devices such as Stop/Slow paddles or red flags should be provided to flaggers. Oftentimes, the Stop/Slow paddle is the preferred hand-signaling device because the paddle gives road users more positive guidance than red flags, which are primarily used in emergency situations.
- Traffic control persons operating during hours of darkness or when there is poor visibility are provided with a reflective paddle and a flashlight fitted with a red signaling device.
- A means of communication is provided when there is more than one traffic control person. When there are multiple traffic control persons that are not working within sight of each other, an effective means of communication shall be provided and used (preferably radios).

Training

- All workers involved in traffic control, including flaggers, are provided training per their respective duties.

TRAFFIC SAFETY BULLETIN

Integrated Water Services, Inc.
(the Company)

Purpose

The purpose of this program is to define the requirements for employees to stay safe from traffic while working in active roadways.

Scope

This policy covers all Company employees and contractors.

When work is performed by a subcontractor on a company site, the contractor's written safety program shall take precedence for their employees. However, subcontractors may adopt this procedure for their use.

Procedure

Construction personnel should exercise care whenever working in the roadway environment, including conducting preconstruction surveys, working within or outside of contractor established traffic control, or conducting post-construction surveys.

- Use appropriate traffic signals and proceed with the normal traffic flow when entering or
- leaving a work area adjacent to public traffic.
- Face traffic. Plan an escape route in case an errant vehicle or object enters the work area.
- Have another employee act as a safety lookout while you work, if someone is available.
- Plan work in advance to keep employee exposure to public traffic to a minimum.
- Park vehicles in the shoulder or closed lanes of travel between oncoming traffic and the work location to provide barrier protection where workers are engaged in construction activities. Do not park vehicles where they may inhibit the safety or flow of the construction activity.
- Provide enough time to walk across the lanes safely when required to cross traffic lanes on
- foot.
- Stay in your vehicle with seatbelt restraint buckled while in a lane closure unless duties
- require otherwise.
- Do not work in or within 6 feet of the traveled way without proper signage or a lane closure.

When a project is planned to take place in an active roadway, a written Traffic Management Plan must be developed for the conditions and hazards specific to that project. Contact the project engineer for a copy of the Traffic Management Plan.

Exceptions:

Within 6 feet from the traveled way, brief operations may be conducted without using a lane closure or signage, if the following conditions are met:

1. Parking or working is limited to no more than 20 minutes.
2. Traffic volume is light.
3. Sight distance is at least 500 feet in each direction. If not, the resident engineer should work with the contractor to provide safe access for employees to work inside a lane closure.
4. Employees feel it is safe to do so. If they do not feel safe or the above provisions cannot be met, they should speak with their resident engineer or supervisor and ask to work behind a contractor-established lane closure.

TRENCHING EXCAVATION AND SHORING

Integrated Water Services, Inc.
(the Company)

Purpose

This Excavation and Trenching Plan (the Plan) applies to all open excavations or man-made cut, cavity, trench, or depression in an earth surface formed by earth removal. It is designed to prevent a cave-in (i.e., the separation of a mass of soil or rock material from the side of an excavation) or the loss of soil from under a trench shield or support system that could entrap, bury, or otherwise injure and immobilize a person.

Trenches are a subset of excavations. All trenches are a type of excavation, but all excavations are not trenches. See the Definitions Section of the Plan to determine whether your worksite is classified as a trench or an excavation.

The Plan addresses the safety requirements of the federal excavation rules for construction at 29 CFR 1926.650 to 1926.652 and appendices, and the employee training rules at 29 CFR 1926.20(b)(1) and 29 CFR 1926.21(b)(2).

Scope

This procedure applies to all Company employees.

When work is performed by a subcontractor on a company site, the contractor's written safety program shall take precedence for their employees. However, subcontractors may adopt this procedure for their use.

Definitions

Competent Person: someone who is capable of identifying existing and predictable hazards in the surroundings, or working conditions that are unsanitary, hazardous, or dangerous to employees, and who has authorization to take prompt, corrective measures to eliminate them.
Confined Space: a space that is large enough and so configured that an employee can bodily enter and perform work and has limited or restricted means of entry or exit and is not designed for continuous employee occupancy.
Excavation: any man-made cut, cavity, trench, or depression in the earth's surface formed by earth removal.
Hazardous Atmosphere: means an atmosphere that is explosive, flammable, poisonous, corrosive, oxidizing, irritating, oxygen-deficient, toxic, or otherwise harmful that may cause death, illness, or injury to persons exposed to it.
Protective System: means a method of protecting employees from cave-ins, from material that could fall or roll from an excavation face or into an excavation, or from the collapse of adjacent structures. Protective systems include support systems, sloping and benching systems, shield systems, and other systems that provide the necessary protection.
Registered Professional Engineer: a person who is registered as a professional engineer in the state where the work is to be performed. However, a professional engineer who is registered in any state is deemed to

be a “registered professional engineer” within the meaning of federal rules when approving designs for “manufactured protective systems” or “tabulated data” to be used in interstate commerce.

Shield (trench box): means a structure that is able to withstand the forces imposed on it by a cave-in and thereby protects employees within the structures. Shields can be permanent structures or can be designed to be portable and moved along as work progresses. Additionally, shields can be either premanufactured or job-built in accordance with the OSHA regulations at 29 CFR 1926.652(c)(3) or 29 CFR 1926.652(c)(4). Shields used in trenches are usually referred to as trench boxes or trench shields. Trench boxes or shields protect employees from cave-ins that might occur by providing sheltered space where employees may work. They are not designed to prevent cave-ins. A typical shield consists of two steel plates separated by structural members to form a box open at the top, bottom, and both ends. The box is lowered into the trench so that the steel plates face the trench's sidewalls. Employees then climb into the protected area defined by the steel plates. As the work progresses, the box is dragged along the bottom of the trench by a chain or cable suspended from a backhoe above the ground.

Shoring System: a structure such as a metal hydraulic mechanical or timber shoring system that supports the sides of an excavation and is designed to prevent cave-ins.

Sloping: a method of protecting employees from cave-ins by excavating to form sides of an excavation that are inclined away from the excavations so as to prevent cave-ins. The angle of incline required to prevent a cave-in varies with differences in such factors as the soil type, environment conditions of exposure, and application of exposure and application of surcharge loads.

Support System: structures such as underpinning, bracing, and shoring that provide support to an adjacent structure or underground installation or to the sides of an excavation or trench.

Surface Encumbrance: anything that creates a hazardous surcharge load on the sides of a trench or excavation, such as equipment, building materials, vehicles, soil, and sources of vibration, foundations, streams, water tables, or geological anomalies, that could cause it to cave in and injure or kill those inside.

Trench: a narrow underground excavation that is deeper than it is wide, and no wider than 15 feet (ft) (4.5 meters (m)). In general, the depth is greater than the width, but the width of a trench (measured at the bottom) is not greater than 15 ft (4.6 m). If forms or other structures are installed or constructed in an excavation so as to reduce the dimension measured from the forms or structure to the side of the excavation to 15 ft (4.6 m) or less (measured at the bottom of the excavation), the excavation is also considered to be a trench.

the employee(s) to whom the training was given.

Responsibilities

Plan Administrator

- The plan administrator will be a competent person and will:
- Review and approve the digging, trenching, and excavation drawing and permit.
- Ensure that known underground utilities and structures have been identified and physically located and marked.
- Ensure that precautions will be taken to protect existing underground utilities and structures.
- Ensure that all responsible organizations have given their input for the proposed excavation site.
- Ensure that adequate safety control measures have been identified and implemented.

- Approve (by signature) or disapprove trenching-related permits.
- Monitor the overall effectiveness of the program through audits and annual reviews.
- Conduct atmospheric testing, other technical assistance, or equipment selections needed.
- Provide or assist with arranging site worker training, competent person training, and retraining of those who may be involved in excavations.
- Conduct an annual audit of the trenching program.
- Maintain records relating to training and audits.
- Investigate and document all reported accidents and/or near-miss accidents that are directly or indirectly related to trenching.

The plan administrator may designate a competent person with the authority to administer or implement one or more components of this Plan.

Competent Person

The competent person must be able to demonstrate the training, experience, and knowledge of soil analysis, use of protective systems, and the requirements of this Plan and all relevant local, state, and federal regulatory requirements, including the federal rules for excavations at 29 CFR Part 1926, Subpart P.
The competent person will be able to:

- Evaluate soil conditions and select appropriate protective measures.
- Construct protective systems in accordance with the excavation regulatory requirements.
- Preplan, such as contact utilities (gas, electric) to locate underground lines; plan for traffic control, if necessary; and determine proximity to structures that could affect choice of protective systems.
- Test for low oxygen, hazardous fumes, and toxic gasses, especially when gasoline engine–driven equipment is running, or the dirt has been contaminated by leaking lines or storage tanks.
- Ensure adequate ventilation or respiratory equipment, if necessary.
- Provide safe access into and out of the excavation.
- Provide appropriate protection if water accumulation is a problem.
- Complete an excavation permit prior to breaking the ground surface.
- Inspect the site daily at the start of each shift, following a rainstorm, or after any other hazard-increasing event.
- Keep excavations open the minimum amount of time needed to complete operations.

The competent person must be able to detect:

- Conditions that could result in cave-ins
- Failures in protective systems
- Hazardous atmospheres
- Other hazards, including those associated with confined spaces.

The competent person will have the authority to take prompt corrective measures to eliminate existing and predictable hazards and stop work when required.

Supervisor

A supervisor must be classified as a competent person and will be in charge of each excavation. The supervisor will:

- Successfully complete training for classification as a competent person for trenching operations.
- Implement the Excavation and Trenching Plan for work areas under their control.
- Act as the competent person for excavation sites under his or her control.
- Ensure that the equipment necessary to complete an excavation safely is available and in good condition.
- Conduct soil tests to determine soil type.
- Ensure that all underground utility installations are located and marked before excavation begins.
- Receive written approval from the relevant utilities and landowners for digging, trenching, or excavating operations.
- Ensure that underground installations are protected, supported, or removed while the excavation is open. Notify the appropriate agencies when utility systems are exposed during the excavation process to allow the location and condition of the utility to be evaluated.
- Ensure worker protection and compliance with other applicable safety plans or programs.
- Ensure protection of the public with appropriate barricades.
- Determine what protective systems will be used to prevent cave-ins.
- Complete an excavation permit prior to breaking the ground surface.
- Conduct daily inspections of excavations, the adjacent areas, and protective systems for evidence of a situation that could result in possible cave-ins, indications of failure of protective systems, hazardous atmospheres, or other hazardous conditions.
- Immediately notify your supervisor if a utility system is damaged during the trenching or excavation process.

Employee:

Each employee engaged in trenching or other excavation-related activities must:

- Complete training, and request assistance when uncertain about any activity he or she must perform.
- Complete an excavation permit prior to breaking the ground surface.
- Use appropriate personal protective equipment (PPE).
- Adhere to the requirements of the Plan.
- Report all workplace injuries and unsafe conditions to the supervisor.

Excavation and Trenching Safety Program

Hazard Assessment

Excavation and trenching work presents serious hazards to all workers involved. Cave-ins pose the greatest risk and are much more likely than other excavation-related accidents to result in worker fatalities. Other potential hazards include falls, falling loads, hazardous atmospheres, and incidents involving mobile equipment.

Before work begins on an excavation or trench, the competent person(s) will evaluate the specific hazardous conditions at the worksite through jobsite studies, observations, test borings for soil type or

conditions, and consultations with local officials and utility companies. The following factors will be considered to determine the hazards associated with specific site conditions:

- Traffic
- Proximity and physical conditions of nearby structures
- Soil
- Surface water and groundwater
- Location of the water table
- Overhead and underground utilities
- Weather

Soil Classification

Before any work is begun on an excavation or trench, the soil classification will be determined by the competent person and in accordance with Soil Classification guidelines (29 CFR 1926 Subpart P, Appendix A).

Soils shall be classified into **Type A, B, or C** based on **visual and manual analysis** as described below. When soils exhibit multiple characteristics, classify the soil in the **lowest** category (most unstable).

Type A – Most Stable

- Cohesive soils with an unconfined compressive strength of **1.5 tons per square foot (tsf) or greater**
- Examples: clay, silty clay, sandy clay, clay loam
- **Not Type A** if:
    - Fissured
    - Subject to vibration
    - Previously disturbed
    - Seepage or water present
    - Layered with other soil types

Type B – Medium Stability

- Cohesive soil with strength **between 0.5 tsf and 1.5 tsf**
- Includes:
    - Fissured Type A soils
    - Previously disturbed soils
    - Stable rock not meeting Type A
    - Dry, unstable granular soils (e.g., angular gravel)
    - Soil subject to vibration
    - Layered soils with a dip of less than 4:1

Type C – Least Stable

- Cohesive soils with strength **less than 0.5 tsf**
- Granular soils like gravel, sand, loamy sand

- Submerged soils or those seeping water
- Submerged rock that is not stable

Classification Procedure

A. Visual Test
Performed before any manual testing.
- Observe the soil during excavation.
- Note particle size, shape, and layering.
- Check for:
    - Water presence or seepage
    - Fissures or cracks
    - Signs of previously disturbed soils
    - Organic material or foreign debris
    - Signs of vibration

B. Manual Test
Performed after visual test to confirm classification.

1. **Plasticity Test**
    - Roll a moist soil sample into a thread.
    - If it can be rolled into a 1/8" thread without breaking, it is cohesive.
2. **Dry Strength Test**
    - Let the soil dry.
    - If it crumbles easily, it may be Type C.
    - If it can withstand some pressure without breaking, it may be Type B or A.
3. **Thumb Penetration Test**
    - Press the thumb into a fresh soil clump.
        - If thumb enters easily past knuckle → **Type C**
        - Thumb indents soil but doesn't penetrate easily → **Type B**
        - Thumb makes only a dent → **Type A**
4. **Pocket Penetrometer or Shear Vane Tester**
    - If available, measure unconfined compressive strength:
        - ≥ 1.5 tsf → Type A
        - 0.5 to 1.5 tsf → Type B
        - < 0.5 tsf → Type C

Surface Encumbrances
All surface encumbrances that are located so as to create a hazard to employees will be removed or supported, as necessary, to safeguard employees.

Underground Installations
The estimated location of utility installations, such as sewer, telephone, fuel, electric, water lines, or any other underground installations that reasonably may be expected to be encountered during excavation work, will be determined before opening an excavation.

Utility companies or owners will be contacted within established or customary local response times, advised of the proposed work, and asked to establish the location of the utility underground installations before the start of actual excavation. When utility companies or owners cannot respond to a request to locate underground utility installations within 24 hours (unless a longer period is required by state or local law) or cannot establish the exact location of these installations, the excavation work may proceed provided that such work is done with caution, and detection equipment or other acceptable means to locate utility installations are used.

When operations approach the location of underground utilities, excavation will progress with caution until the exact location of the utility is determined. While the excavation is open, underground installations will be protected, supported, or removed as necessary to safeguard employees.

Safety Procedures

General Requirements
If evidence of a situation that could result in possible cave-ins, slides, failure of protective systems, hazardous atmospheres, or other hazardous condition is identified, exposed workers will be removed from the hazard and all work in the excavation or trench stopped until all necessary safety precautions have been implemented.

Competent Person
A competent person will oversee work performed at any excavation to ensure compliance with this Plan.

Worker Training
Employees who work in or around excavations will be provided training according to their work activities. See the Training subsection of this Plan for specific training requirements.

Safe Access and Exit
Workers will be provided with safe access into and exiting from trenches or excavations that are more than 4 ft deep.

Access: The means of access and the design specifications for such access will be determined by the competent person and in accordance with the following guidelines:

- Ladders used as access to a trench or excavation will extend from the bottom of the excavation to not less than 3 ft (0.9 m) above the surface.
- Ramps used solely for personnel access will be a minimum width of 4 ft (1.2 m) and provided with standard guardrails.
- Ramps used for equipment access will be a minimum width of 12 ft (3.6 m). Curbs not less than 8-in x 8-in (20.3-cm x 20.3-cm) timbers, or equivalent protection, will be provided. Equipment ramps will be designed and constructed in accordance with accepted engineering practice.

Exit Route: The means of exit and the design specifications for such exit will be determined by the competent person and in accordance with the following guidelines:

- A stairway, ladder, ramp, personnel hoist, or other safe means of exit will be located in trench excavations that are 4 ft (1.2 m) or more in depth.
- Exit route(s) will be placed within 25 lateral ft of workers.
- When two or more components form a ramp or runway, they must be connected to prevent displacement and be of uniform thickness.
- Cleats or other means of connecting runway components must be attached in a way that would not cause tripping (e.g., to the bottom of the structure).
- Structural ramps used in place of steps must have a nonslip surface.
- Earthen ramps may be used as a means of exit only if a worker can walk them in an upright position and only if they have been evaluated by a competent person.

Perimeter Protection

Protection will be provided to prevent personnel, vehicles, and equipment from falling into excavations.

Fall Protection

- All wells, calyx holes, pits, and shafts will be barricaded or covered.
- Excavations will be backfilled as soon as possible. Upon completion of exploration and similar operations, test pits, temporary wells, and calyx holes will be backfilled immediately.
- Walkways or bridges will be provided with standard guardrails where people or equipment are required or permitted to cross over excavations.

Falling Loads

Workers and other personnel must be prevented from passing or standing underneath loads handled by lifting or digging equipment. They must stand away from any vehicle being loaded or unloaded to avoid being struck by any spillage or falling materials. Operators may remain in the cabs of vehicles being loaded or unloaded when the vehicles are equipped to provide adequate protection for the operator during loading and unloading operations.

Falling Material

Employees will not be permitted to work on the faces of sloped or benched excavations at levels above other employees except when employees at lower levels are adequately protected from the hazard of falling material or equipment.

Employees will be protected by scaling, ice removal, benching, barricading, rock bolting, wire mesh, or other means from loose rock or soil that could create a hazard by falling from the excavation wall. Special attention will be given to slopes that may be adversely affected by weather, moisture content, or vibration.

Placement of Excavated Material

Excavated material will be placed at least 2 ft (0.6 m) from the edge of an excavation or will be retained by devices that are sufficient to prevent the materials from falling into the excavation. In any case, material will be placed at a distance to prevent excessive loading on the face of the excavation. Materials such as boulders or stumps that may slide or roll into the excavation will be removed or made safe.

Hazardous Atmospheres

Workers will not be permitted to work in or near hazardous atmospheres unless required testing and monitoring, worker precautions, and rescue services are in place. Work conducted in enclosed areas where hazardous atmospheres or gases could accumulate (e.g., landfills, manure pits, gas distribution lines, or hazardous materials storage locations) must be done in accordance with the Confined Spaces Plan.

Types of Atmospheres

Such atmospheres include those with the following:

- Atmospheric oxygen concentration below 19.5 percent or above 23.5 percent
- A combustible gas concentration greater than 10 percent of the lower flammable limit
- Concentrations of hazardous substances that exceed those specified in the threshold limit values (TLVs) for airborne contaminants established by the American Conference of Governmental Industrial Hygienists (ACGIH)

Atmospheric Tests

Air quality tests will be taken before employees enter excavations more than 4 ft in deep when a hazardous atmosphere exists or could be expected to exist. If there is any possibility that the trench or excavation could contain a hazardous atmosphere, the supervisor or other competent person will ensure that:

- Atmospheric testing is conducted before worker entry and continuously during work.
- Where oxygen deficiency (atmospheres containing less than 19.5 percent oxygen) or a hazardous atmosphere exists or could reasonably be expected to exist, the atmospheres in the excavation will be tested before employees enter excavations greater than 4 ft (1.2 m) deep.
- Tests will be conducted as often as necessary to ensure the quality and quantity of the atmosphere, including checks for flammable gases and oxygen deficiency.
- A log of all test results will be maintained at the worksite.

Worker Precautions

Suitable precautions will be taken as necessary to protect workers in areas where hazardous atmospheres exist or potentially exist. These precautions will include the following:

- Engineering controls such as ventilation
- Respiratory protection in accordance with the Respiratory Protection Plan

- Full body harnesses and lifelines

Rescue Equipment
Where hazardous atmospheres exist or may reasonably be expected to exist, emergency rescue equipment will be on the worksite and readily accessible to rescue personnel. See the Emergency Rescue Operations subsection of this Plan for more information about emergency procedures.

Daily Inspections
Daily inspections for hazardous atmospheres must be conducted by a competent person.

Walkways and Guardrails over Excavations
Walkways will be provided where workers or equipment are allowed to cross over excavations. Guardrails will be provided on walkways used by the general public regardless of the height above the excavation. Guardrails will be provided on walkways used only by on-site personnel if the walkway is 4 ft or more above lower levels. If workers pass below a walkway, guardrails and toeboards will be provided.

Confined Spaces
Employees entering excavations classified as confined spaces or that otherwise present the potential for emergency rescue, such as bell-bottom pier holes or similar deep and confined footing, will wear rescue equipment and maintain communication with the confined space attendant. See the Confined Space Plan for more information about safety procedures related to confined spaces.

Water Accumulation
Control measures: Employees will not work in excavations in which there is accumulated water or in which water is accumulating unless the water hazards posed by accumulation is controlled. Freezing, pumping, draining, and similar control measures will be planned and directed by a registered engineer. Consideration will be given to the existing moisture balances in surrounding soils and the effects on foundations and structures if the soil is disturbed.

Drainage: Diversion ditches, dikes, or other means will be used to prevent surface water entering an excavation and to provide good drainage of the area adjacent to the excavation.

Water Control Equipment: When continuous operation of groundwater control equipment is necessary, an emergency power source will be provided. Water control equipment and operations will be monitored by a competent person to ensure proper operation.

Mobile Equipment and Motor Vehicle Traffic Precautions: Traffic around the excavation or trench site must be controlled and barricades, signs, and/or flag persons used as needed to control both vehicular and pedestrian traffic.

High visibility PPE: Workers exposed to public vehicular traffic will be provided with and will wear warning vests or other suitable garments marked with or made of reflective or high-visibility material.

Barricades: When vehicles or mobile equipment are used or allowed adjacent to an excavation, substantial stop logs or barricades will be installed. The use of a ground guide is recommended.

Loading/unloading vehicles: Workers will stand away from vehicles being loaded or unloaded to avoid being struck by spillage or falling materials.
Hoisting operations: Excavating or hoisting equipment will not be allowed to raise, lower, or swing loads over or adjacent to personnel in the excavation without substantial overhead protection. Personnel will maintain a safe distance from a hoisting operation until the load has been placed.
Warning system: When mobile equipment is operated adjacent to an excavation, or when such equipment is required to approach the edge of an excavation, and the operator does not have a clear and direct view of the edge of the excavation, a warning system will be utilized, such as barricades, hand or mechanical signals, or stop logs. If possible, the grade should be away from the excavation.

Stability of Adjacent Structures
Protective systems: If the stability of adjoining buildings or walls is endangered by excavations, shoring, bracing, or underpinning will be provided to ensure the stability of the structure and to protect employees.

Support Systems: Sidewalks, pavements, and related structures will not be undermined unless a support system is provided to protect employees and the sidewalk, pavement, or related structure.

Excavation below the level of adjacent structures: Excavations below the level of the base of footing of any foundation or retaining wall will not be permitted unless:

- A support system, such as underpinning, is provided to ensure the stability of the structure and to protect employees involved in the excavation work or in the vicinity thereof; or
- The excavation is in stable rock; or
- A registered professional engineer has approved the determination that the structure is sufficiently removed from the excavation so as to be unaffected by the excavation or determines that the excavation will not pose a hazard to employees.

Site Inspections

When personnel will be in or around an excavation, a competent person will inspect the excavation, the adjacent areas, and protective systems daily:

- Before each work shift
- Throughout the work shifts as dictated by the work being done
- After every rainstorm
- After other events that could increase hazards (e.g., snowstorm, windstorm, thaw, earthquake)
- When fissures, tension cracks, sloughing, undercutting, water seepage, bulging at the bottom, or other similar conditions occur
- When there is a change in size, location, or placement of the spoil pile

- Where there is any indication of change in adjacent structures

The competent person will use the attached Excavation/Trench Inspection Checklist or equivalent form when conducting inspections. All completed inspection forms will be maintained in the support center and available to the submitter via email.

Protective Systems

General Requirements

Excavations less than 5 ft deep: For excavations less than 5 ft (1.5 m) deep, the competent person will examine the excavation for potential cave-in hazards and determine if a protective system is needed.

Excavations 5 ft deep or deeper: All workers in an excavation or trench 5 ft deep or deeper will be protected from cave-ins by an adequate protective system. Protective systems will have the capacity to resist without failure all loads that are intended or could reasonably be expected to be applied or transmitted to the system.

Excavations more than 20 ft deep: Protective systems for all excavations more than 20 ft (6.0 m) deep will be designed and approved by a registered professional engineer.

Protective System Selection: The competent person will select the method of protection that is most suitable for the particular excavation site, taking into consideration soil type and surrounding structures. See the Soil Classification subsection of this Plan for more information.

Types of protective systems: Excavations in which employees could potentially be exposed to cave-ins will be protected by:

1. Sloping or benching the sides of the excavation; or
2. Supporting or shoring the sides of the excavation; or
3. Placing a shield between the side of the excavation and the work area.

Exempt Excavations

The following excavations do not require protective systems:

- Excavations made entirely in stable rock; or
- Excavations are less than 4 ft (1.52 m) deep and examination of the ground by a competent person provides no indication of a potential cave-in.

A fixed means to safely exit exempt excavations will be provided for workers.

Sloping and Benching Systems

The competent person or supervisor will select and construct slopes and configurations of sloping and benching systems from one of four options.

Slope the walls of the excavation at an angle so that soil does not roll into the excavation: The degree of the sloping angle needed depends on the stability of the soil at the site. The minimum allowable slopes for excavations less than 20 ft deep based on soil type and angle to the horizontal are as follows:

Soil Type	*Height/Depth Ratio*	*Slope Angle*
B	*1:1 or less*	*45*
C	*11/2:1*	*34*

Examples:

In **Type B soil**, a 10-ft deep trench must be sloped to a 45-degree angle. The total distance across such a trench would be 20 ft plus the width of the trench.

In **Type C soil**, the 10-ft deep trench would be sloped at a 34-degree angle. The total width of the trench would be 15 ft in both directions, for a total of 30 ft across plus the width of the trench.

Sloping will be greater if the areas near the excavation are subject to heavy loads (e.g., soil piles and vehicles).

Excavation in an Unclassified Soil

If the soil is not classified, the excavation must be sloped according to the requirements for Type C soil.

Benching may be used in conjunction with simple sloping. Benches must be below the maximum allowable slope for that soil type. For example, a 10-ft-deep trench in Type B soil must be benched back 10 ft in each direction with the maximum 45-degree angle.

Tables for Sloping and Benching

This space intentionally left blank

INTEGRATED WATER SERVICES

Excavations in Layered Soils

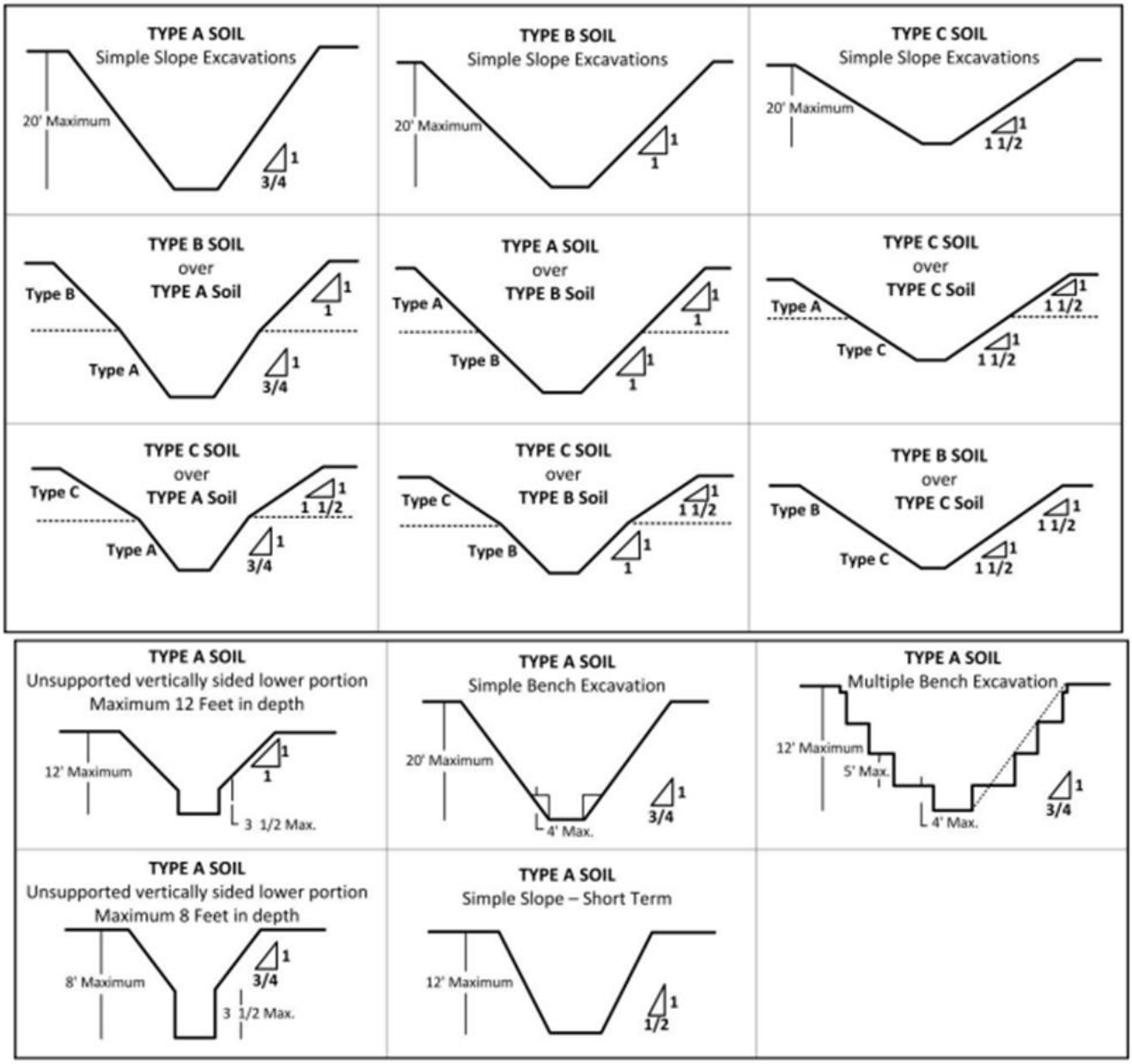

Worker Safeguards
Workers must not work on the faces of sloped or benched excavations at levels above other employees except when employees at the lower levels are adequately protected from the hazard of falling, rolling, or sliding material or equipment.

Shoring and Shielding Systems
Option 1
Design the shoring system using the soil classification, timber shoring, and aluminum shoring of the OSHA excavation rule or applicable state regulations. Designs for timber shoring in trenches will be determined according to the conditions and requirements of Appendices A and C of the excavation rule. Designs for aluminum hydraulic shoring must be according to the manufacturer's tabulated data, but if such data cannot be used, designs must follow the requirements of Appendix D of the rule. The system must be approved by a registered professional engineer.
Option 2
Design using the system manufacturer's tabulated data. Design of support systems, shield systems, or other protective systems that are drawn from manufacturer's tabulated data will be in accordance with all specifications, recommendations, and limitations issued or made by the manufacturer, and the data will be in written form and kept at the jobsite during construction of the protective system. The system must be approved by a registered professional engineer.
Option 3
Design using other tabulated data. Designs of protective systems will be selected from and be in accordance with tabulated data, such as tables and charts approved by a registered professional engineer. These data must be in writing and must include sufficient explanatory information to enable the user to make a selection, including the criteria for determining the selection and limits of the data. A copy of the information must be kept at the worksite during construction of the protective system. Upon completion of the system, the data may be stored away from the jobsite but must be made available to regulatory staff on request.
Option 4
Use a registered professional engineer to design the shoring and shield protective systems. Designs must be in the form of a written plan kept at the jobsite during construction of the protective system.

Shoring
Shoring is used when the location or depth of the trench makes sloping back to the maximum allowable slope impractical. Shoring will be used for unstable soil or depths greater than 5 ft (1.5 m) unless benching, sloping, or other acceptable plan is accepted by the competent person.

Installation and Removal of Shoring or Support Systems
Installation of a shoring or support system will be closely coordinated with the excavation of trenches. All shoring will be installed from the top down and removed from the bottom up.

Installation procedures
Members of shoring or support systems will be securely connected together to prevent sliding, falling, kick-outs, or other predictable failure.

Support systems will be installed and removed in a manner that protects employees from cave-ins, structural collapses, or from being struck by members of the support system.

Individual members of support systems will not be subjected to loads exceeding those that those members were designed to withstand.

Removal procedures. Before temporary removal of individual members begins, additional precautions will be taken to ensure the safety of employees, such as installing other structural members to carry the loads imposed on the support system.

Removal will begin at, and progress from, the bottom of the excavation. Members will be released slowly so as to note any indication of possible failure of the remaining members of the structure or possible cave-in of the sides of the excavation.

Backfilling procedures. Backfilling will progress together with the removal of support systems from excavations.
Excavation of material to a level no greater than 2 ft (0.6 m) below the bottom of the members of a support system will be permitted, but only if the system is designed to resist the forces calculated for the full depth of the trench and there are no indications while the trench is open of a possible loss of soil from behind or below the bottom of the support system.

Shields

A trench shield may be used as long as the protection it provides is equal to or greater than the protection that would be provided by the appropriate shoring system. The competent person or supervisor must follow manufacturer's instructions for premade boxes and shields once a design has been chosen.
Shields may be used in conjunction with sloping or benching.

Load requirements
Shield systems will not be subjected to loads exceeding those that the system was designed to withstand.
Installation requirements. Shields will be installed in a manner to restrict lateral or other hazardous movement of the shield in the event of the application of sudden lateral loads.

Worker protections
Workers will be protected from the hazard of cave-ins when entering or exiting the areas protected by shields. Workers will not be allowed in shields when shields are being installed, removed, or moved vertically.

Excavations below the depth of the shield. Excavations of earth material to a level not greater than 2 ft (.6 m) below the bottom of a shield will be permitted, but only if the shield is designed to resist the forces calculated for the full depth of the trench and there are no indications while the trench is open of a possible loss of soil from behind or below the bottom of the shield.

Protective System Materials and Equipment

Maintenance of Materials and Equipment

Materials and equipment used for protective systems will be free from damage or defects that might impair their proper function. Manufactured materials and equipment used for protective systems will be used and maintained in a manner that is consistent with the recommendations of the manufacturer and in a manner that will prevent employee exposure to hazards.

Damaged Materials and Equipment

When material or equipment that is used for protective systems is damaged, a competent person will examine the material or equipment and evaluate its suitability for continued use. If the competent person cannot ensure that the material or equipment is able to support the intended loads or is otherwise suitable for safe use, such material or equipment will be removed from service and will be evaluated and approved by a registered professional engineer before being returned to service.

Emergency Rescue Operations

[Modify the following rescue procedures as applicable to your operations.]
In the event of any emergency situation requiring rescue from an excavation, workers will not attempt to enter an unprotected excavation or trench to perform rescue. Local emergency services will be notified using the standard reporting system.

Rescue operations that can be performed safely from outside the excavation, such as hoisting a harnessed victim, will be carried out. Other personnel in the excavation will exit immediately and may provide assistance only when their own safety is ensured.

Contractors

All contractors and contractor employees must have their own excavation and trenching safety policies that are in compliance with federal and any applicable state and local regulations. They must also comply with the requirements of this Plan and any additional requirements stipulated by the plan administrator, competent person, or the Contractor Safety and Health Agreement.

Enforcement of Safety Procedures

All employees, including all levels of management, will be held accountable for obeying the worksite safety and health rules. The following four-step disciplinary policy will be applied to everyone by the appropriate level of supervisor:

- Oral warning
- Written reprimand

- Suspension
- Dismissal

Visitors, including contractors who violate safety and health rules and procedures, will be escorted from the site. Should the disciplined person request a review of the disciplinary action, the supervisor will review the situation and make a recommendation to management, which reserves the right for final decision.
Training

All employees, including contractors, involved in trenching or excavation work must be trained in the requirements of this Plan before any trenching- or excavation-related activities begin.
Supervisor Training

All supervisors of trenching and excavation activities must satisfy OSHA requirements for a competent person. Such supervisors must attend competent person training conducted by a trainer approved by the plan administrator or designee.

Employee Training
Personnel who perform work in trenches or excavations must comply with the requirements of this Plan and receive appropriate training that will include:

- Safe work practices during work in excavations
- The use of personal protective equipment (PPE) that will typically be required during work in excavations
- Procedures to be followed if a hazardous atmosphere exists or could reasonably be expected to develop during work in an excavation
- Emergency and nonentry rescue methods and procedures for calling rescue services

Refresher Training
Refresher training will be performed whenever worksite inspections conducted by the supervisor or the plan administrator or designee indicate that an employee or contractor does not have the necessary knowledge or skills to safely work in or around excavations.

Training Records
Training records will be maintained by the safety director and stored in the safety support center.

Recordkeeping
The safety director will ensure that the following electronic records and documents are kept for each excavation or trench project in the electronic DMS of the safety support center and made available for inspection by authorized personnel and regulatory agency staff:

- The credentials of the competent person(s)
- Soil classification methodology and results of tests
- Methodology and background information used to determine which protective systems are required and the type of systems used

- Records of the employee training program, including dates of training and attendee lists
- Safety program enforcement activities
- Worksite inspection reports or logs
- The aspects of the protective systems that have been designed or approved by a registered professional engineer, including the name of such individual or, if a firm, the firm's name, the name of the engineer of record that approved the work for the firm, and the registration number
- Where applicable, evidence that the registered professional engineer of record is in fact working within a discipline applicable to the excavation work
- Accident investigation and near-miss incident reports
- Copies of related safety and health plans
- Injury and illness records

WALKING WORKING SURFACES

Integrated Water Services, Inc.
(the Company)

Purpose

This procedure establishes safety requirements for walking-working surfaces at Integrated Water Services (IWS) to prevent injuries caused by slips, trips, and falls. It ensures compliance with OSHA 29 CFR 1910 Subpart D and supports IWS's safety goals by addressing open holes, elevated surfaces, ladders, platforms, stairways, and floor conditions across all operations.

Scope

This procedure applies to all IWS employees, subcontractors, and visitors at construction sites, fabrication shops, water treatment facilities, and any other IWS-controlled work environments.

Key Responsibilities

Supervisors:

- Ensure walking-working surfaces are safe, maintained, and inspected.
- Coordinate the prompt repair of damaged or hazardous surfaces.
- Ensure guardrails and covers are installed where required.
- Conduct hazard assessments and enforce fall prevention requirements.

Employees & Operators:

- Maintain situational awareness while walking or working on surfaces.
- Report damaged floors, stairs, ladders, or other hazards immediately.
- Do not enter unguarded open holes or elevated areas without fall protection or authorization.

HSEQ Team:

- Provide training and awareness on surface safety and fall prevention.
- Audit project sites and facilities for compliance with surface safety standards.
- Ensure corrective actions are implemented for deficiencies found during inspections.

Walking-Working Surface Requirements

General Requirements

- All surfaces must be kept clean, dry (where possible), and free from recognized hazards such as spills, protruding objects, sharp edges, or obstructions.
- Damaged or worn flooring (including tile, grating, or wood) must be promptly repaired or replaced.
- Walking areas must be illuminated sufficiently for visibility.

Open Holes and Floor Openings

Open holes and floor openings present serious fall and trip hazards and must be protected according to OSHA requirements and IWS expectations. These hazards include, but are not limited to, exposed openings in floors, roofs, decks, grating, and excavation areas.

Protection Requirements:

- **Covers:** All floor holes 2 inches or greater in diameter must be covered with a secured, load-rated cover capable of supporting at least twice the maximum intended load.
- **Guardrails:** When covers are not feasible or temporarily removed, the opening must be protected on all sides by a standard guardrail system.
- **Toe Boards:** Toe boards must be installed when there is potential for tools, materials, or debris to fall to a lower level.
- **Barricades:** Where neither a cover nor guardrail is in place (such as during active work), physical barricades and clear signage must be used to warn and restrict access.

Installation & Verification:

- Covers must be marked with “HOLE” or “COVER” and be secured to prevent movement or displacement.
- Materials used as covers (plywood, steel plate, etc.) must be in good condition and without defects.
- Supervisors must verify that all open holes and floor openings are either protected or properly barricaded before beginning work each day.

Temporary Removal Protocol:

- Covers may be temporarily removed only under direct supervision and when work requires access through the opening.
- Fall protection must be used by any worker exposed to the opening.
- The hole must be immediately re-covered or re-guarded once access is no longer required.

Excavation & Trenching (Adjacent to Walkways or Work Zones):

- Open excavations near walking-working surfaces must be protected using barricades, fencing, or guardrails.
- Walkboards or trench plates must be installed with slip-resistant surfaces and load ratings appropriate to traffic.
- Access points over excavations must include edge protection and signage.

Reporting & Correction:

- Employees must immediately report any open hole or unprotected floor opening to supervision.
- Work must not proceed in or around open holes until protection is verified.
- Unprotected holes discovered during inspection must be corrected or secured immediately.

Stairways and Ladders

- Handrails must be installed on stairways with four or more risers or rising more than 30 inches.
- Fixed ladders must be maintained in good condition and meet clearance and design standards.
- Portable ladders must be inspected before use and secured during work activities.

Work Platforms and Elevated Surfaces

- Elevated work surfaces 4 feet or more above a lower level must have guardrails or fall protection systems.
- Scaffolding and mobile platforms must be inspected daily and meet OSHA stability requirements.
- Workers must maintain three points of contact when climbing or descending.

Safe Operating Procedures

After Installation and Before Use:

- Conduct a visual inspection of walking and working surfaces, ladders, and platforms.
- Identify and correct or report hazards such as loose strapping, loose anchors, holes, debris, or obstructions.

During Use:

- Do not run, jump, or carry loads that obstruct view or create imbalance.
- Use designated paths and stairways and avoid unsafe shortcuts or walking across surfaces not designed for foot traffic.
- Always use fall protection systems when required and ensure they are anchored correctly.

After Use:

- Clean up spills and secure any materials or tools to prevent tripping hazards.
- Report any newly identified surface issues or damage to supervision immediately.

Training Requirements

Mandatory Training for All Affected IWS Employees:

- Hazards associated with walking-working surfaces and how to identify them.
- Use and inspection of ladders, platforms, and stairways.
- Procedures for reporting damaged or hazardous surfaces.
- Requirements for open hole covers and fall protection.

Training must be completed upon hire and repeated at a minimum of every three years.

WASTE MANAGEMENT

Integrated Water Services, Inc.
(the Company)

INTEGRATED WATER SERVICES

Purpose

The purpose of the integrated Water Services (the Company) waste management strategy is to provide guidance and requirements necessary for efficient, effective, and compliant waste management during construction and operations at the Company.

Scope

This procedure applies to all Company employees. When work is performed on a non-owned or operated site, the operator's program shall take precedence, however, this document covers Company employees and subcontractors and shall be used on owned premises, or when a contractors program doesn't exist or is less stringent.

Procedure

The Company Safety Director or other designated person in his or her absence is accountable for managing waste and disposition of waste generated at the work site.

Waste Estimation

Project wastes, trash, and/or scrap materials will be taken into consideration before work begins. The Company must estimate the waste that will be generated prior to work being performed so that the need for containers and waste removal, if necessary, can be determined.

Each site will utilize the following for planning of dumpster scheduling and total non-hazardous dry waste material. These figures do not include neither recycling nor waste minimization efforts and reflect no use of an incinerator. Dumpster figures are based on a 40 yard container and can be modified if another size is used by changing the table below.

SAMPLE ONLY - SOLID WASTE					
Number of Employees	**10**	**25**	**35**	**50**	**100**
Total Estimated Square Feet of Waste (@ 0.675 cu ft per person daily)					
Daily	7	17	24	34	68
Weekly	47	118	165	236	473
Monthly (4.33 wks)	205	511	716	1,023	2,046
Annual	2,455	6,138	8,593	12,276	24,551
Total Estimated Weight of Waste (@ 4lb per person daily)	40	100	140	200	400
Weekly	280	700	980	1,400	2,800
Monthly (4.33 wks)	1,212	3,031	4,243	6,062	12,124
Annual	14,549	36,372	50,921	72,744	145,488
Number of Total Dumpster Fills 40 yard dumpster 7x8x22 = 1,232 square feet					
Daily	0.0	0.0	0.0	0.0	0.1
Weekly	0.0	0.1	0.1	0.2	0.4
Monthly (4.33 wks)	0.2	0.4	0.6	0.8	1.7
Annual	2.0	5.0	7.0	10.0	19.9

The Company must coordinate with the project site or owner to ensure proper disposal of waste or scrap materials.

The Company must ensure the owner client is aware of whether waste and scrap materials will be taken off site by Company or will be disposed of on the owner client's site.

Waste Segregation

- Do not mix waste streams
- Only place waste in the designated container, satellite accumulation area (SAA), recyclable accumulation area (RAA), universal waste accumulation area (UWAA) or designated dumpster.

INTEGRATED WATER SERVICES

Recycling

Wastes should be recycled whenever practicable. The Company will encourage proper segregation of waste materials to ensure opportunities for reuse or recycling occurs at each work site. The collection of recycled material will reduce the total load on the environment. Bins of sufficient size must be lined with a plastic bag and clearly labeled for use.

Waste Handling Matrix

The Company Waste Handling Matrix will:

- Address safe practices related to the immediate storage and handling of waste, scrap, or leftover material.
- The handling, organization and storage of waste and scrap materials to minimize potential impact to the environment. Waste materials shall be properly stored and handled to minimize the potential for a spill or impact to the environment. During outdoor activities receptacles must be covered to prevent dispersion of waste materials and to control the potential for runoff.

Waste Stream	Location	Activity Generating Waste	Hazardous/Non Hazardous	Safe Storage Practice	Disposal Method	PPE or Other Precautions
Aerosol Can Contents	Various jobs and shop	Puncturing of aerosol cans	Hazardous	As per manufacturer	As per manufacturer and State regs	Read SDS
Aerosol Cans	Various Locations	Painting, lubricants, cleaning	Non-Hazardous if aerosol can is empty	As per manufacturer	Place empty can into garbage or recycle product bin	Read SDS
Batteries (Alkaline)	Various Locations	Battery Failures	Universal Waste	As per manufacturer	Transport to approved site for recycling or disposal	Read SDS
Batteries (Lead Acid)	Various Locations	Battery Failures	Universal Waste	As per manufacturer SDS	Lead acid batteries are returned to the Vendor upon removal	Read SDS
Batteries (NiCad)	Various Locations	Battery Failures	Universal Waste	As per manufacturer SDS	Ship to approved site for recycling or disposal	Read SDS
Butane Torch Bottle	Various Locations	Bottle failure	Hazardous	As per manufacturer SDS	As per manufacturer and State regs	Read SDS
Cardboard/Office Paper	Various Locations	Shipping Boxes & Office Activities	Non-Hazardous	Place in RAA or UWAA	Recycle where facilities are available. Dispose in Universal Waste when recycle facilities are not available	

INTEGRATED WATER SERVICES

Waste Stream	Location	Activity Generating Waste	Hazardous/Non Hazardous	Safe Storage Practice	Disposal Method	PPE or Other Precautions
Computers Discarded	Offices	Replacement	Non-Hazardous	Place in RAA or UWAA	Ship to assigned site for recycling or disposal	
Diesel Filters-Used	Equipment Repair	Filter Changes	Non-Hazardous	RAA for drained and crushed used filters	Drain for 12 hrs., crush and incinerate in Smart Ash unit	Place metal in recycle metal dumpster
Diesel Rags	Various Locations	Mechanic activities	Non-Hazardous	As per subcontractor procedures	As per local regulations	
Drained Diesel	Equipment Repair	Draining diesel fuel and filters	Non-Hazardous when burned as off-Spec fuel	Place in "used oil" tank in the equipment repair shop and fab shop	Burned for energy recovery in clean burn multi-oil heating system	Have SDS available to workers
Empty Paint Cans	Various Locations	Painting activities	Non-Hazardous	Transport to nearest shop and collect for third party disposal	Ship to assigned site for recycling or disposal	Have SDS available to workers Paint cans must be RCRA empty
Fluorescent Light Ballast	Various Locations	Failure	Non-Hazardous unless they contain PCB's or DEHP	None	UWAA	Ballast will say on the label if it contains PCB's. See SDS
Fluorescent Light Bulbs	Shops, Office Areas	Bulb replacement	Universal Waste	Place bulbs in their original container in the UWAA in the shop area	Ship to designated site for recycling or disposal	Take measures not to break the bulbs during transfer to waste. Hand, Eye, and face protection
Glass	Various Locations	Replacement	Non-Hazardous	None	Place in UWAA dumpster	Protect hands, body, eyes, and face
Glycol Rags	Equipment Repair	Fluid Changes	Non-Hazardous	As per subcontractor procedures	As per subcontractor procedures	As per subcontractor procedures
Glycol-Used	Equipment Repair	Fluid Changes	Non-Hazardous	As per subcontractor procedures	Recycled as per subcontractor procedures	Have SDS available to workers Subcontractor to dispose of product
Hoses & Belts	Equipment Repair	Replacement	Non-Hazardous	Place UWAA dumpster	Place UWAA dumpster	Have SDS available to workers Drain all fluids from hoses

INTEGRATED WATER SERVICES

Waste Stream	Location	Activity Generating Waste	Hazardous/Non Hazardous	Safe Storage Practice	Disposal Method	PPE or Other Precautions
Metal Shavings/Cuttings	Equipment Repair	Fabricating activities	Excluded Hazardous if recycled	Placed in recycle metal dumpster or metal only RAA's	Ship to assigned site for recycling or disposal	Ensure there are no free-flowing cutting fluids present before disposal
Oil Filters-Used	Equipment Repair	Oil filter changes	Excluded Hazardous	As per subcontractor procedures	As per subcontractor procedures	As per subcontractor procedures
Oil-Used	Equipment Repair	Draining oil and filters	As per subcontractor procedures	As per subcontractor procedures	As per subcontractor procedures	Have SDS available to workers
Oily Waste (rags, absorbents)	Various Locations	Mechanic activities, equipment drips and leaks	Non-Hazardous	Oily waste rag WAA's lined w/clear bags w/yellow stripes.	Incinerated in Smart Ash unit	Have SDS available to workers
Paint Waste (rags, rollers, brushes, etc.)	Various Locations	Painting activities	As per subcontractor procedures	As per subcontractor procedures	As per subcontractor procedures	Have SDS available to workers
Parts Cleaner Rags	Equipment Repair	Cleaning parts	Non-Hazardous	As per subcontractor procedures	As per subcontractor procedures	Have SDS available to workers
Scrap Metal	Various Locations	Fabrication activities & house cleaning	Excluded Hazardous if recycled	Placed in recycle metal dumpster or metal only RAA's	Ship to assigned site for recycling or disposal	Eye Protection Gloves
Tires	Various Locations	Replacement	Non-Hazardous	UWAA	Ship to assigned site for recycling or disposal	As per subcontractor procedures
Toner Cartridges	Offices	Copiers, printers, fax machines	Non-Hazardous	Placed in original container in UWAA	Ship to assigned site for recycling or disposal	Verify toner is expended before disposal.
Wood Waste	Various Locations	Various activities and shipping pallets	Non-Hazardous	Store on the far back corner of the pad or in the dump truck box if available.	Ship to assigned site for recycling or disposal	Pallets are refurbished and recycled when possible

Storage Requirements
Company must ensure project related wastes are stored and maintained in an organized fashion to encourage proper disposal and minimize risks to employees. Proper waste receptacles must be provided for trash and materials that may be reused or recycled during a project.

PPE
Refer to the Personal Protective Equipment procedure and the Safety Data Sheets for PPE requirements.

Education and Training

Employees shall be instructed on managing waste generated at the work site and on the proper disposal method of wastes. Examples include:

- Instruction on the proper handling, storage and disposal of wastes and depending on the waste generated at the site to also include general instruction on disposal of non-hazardous wastes, trash or scrap materials. If wastes generated are classified as hazardous then employees shall be trained to ensure proper disposal and compliance with regulations. Where subcontractors are the generators of waste, the subcontractor must have a Waste Management Plan that meets regulatory requirements. Subcontractors must train their workers to the requirements of their Waste Management Plan.
- Minimization methods to reduce waste.
- Recycling methods and proper PPE to be utilized.