BIRMINGHAM ALABAMA OCTOBER 20-21, 2022

Alternative Fuels

Luc REIBEL, ATS Group / Walter Materials handling

WALTER Materials handling member of ATS Group

www.ats-group.com

AGENDA

1- Brief Introduction of ATS / Walter Materials handling

2- Case study N°1 : NCC Rgaland, USA

- Blended fuel in Calciner

3- Case study N°2 : Lafarge Martres, France

- Whole tires feeding

3- Conclusion

IEEE east coast

350 employees

More than a 150 years of worldwide experience…

61 M€

85% from out of France

ATS-Hero Fördertechnik
Holzgerlingen, Germany

ATS France
Mulhouse, France

ATS Corp.
NY, USA

ATS Turkey
Istanbul, Turkey

ATS Conveyors India
Pune, India

ATS Group

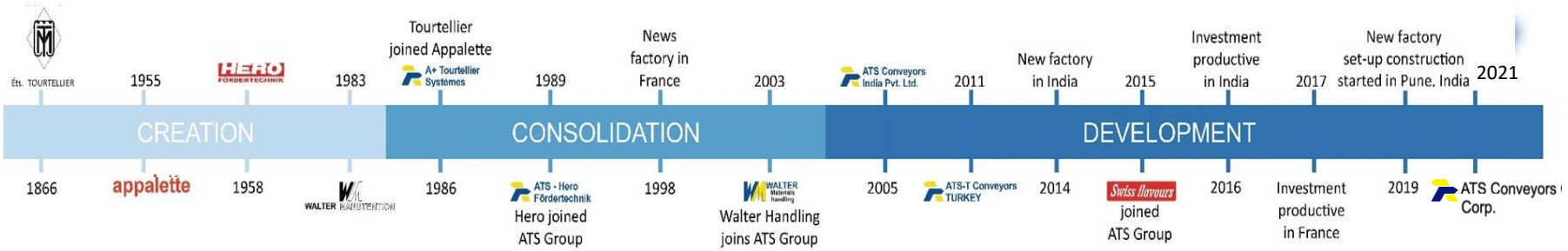

www.ats-group.com

ALTERNATIVE FUELS
REFERENCES

IEEE east coast

EUROPE

- LAFARGE Martres Tolosane, 2015, 2019, 2021
- VICAT Xeuilly & Grave de peille (2006)
- SOLVAY IWPP (2007)

Germany
- HEIDELBERG Schelklingen (2016)
- HEIDELBERG Burglengenfeld (2016)
- HOLCIM Dotternhausen (2012)

Spain
- CEMEX Gador, (2008)
- HOLCIM, Carboneras (2008)
- LAFARGE, Villaluenga & Sagunto (2008 & 2007)

Italy
- Tavernola (2006)
- ITALCEMENTI Matera (1997)

Belgium
- Gaurain Ramecroix (2009)

Turkey
- Cimentas Izmir (2017)
- CIMSA, Eskisehir (2010)
- VICAT Bastas, Ankara (2009)
- OYAK Kazan, Bolu, Aslan (2019)
- Votorantim SIVAS (2020)
- Votorantim Hasanoglan (2021)

Romania
- HOLCIM Campulung (2008)
- LAFARGE Medgidia (2005)

Slovenia
- SALONIT Anhovo (2009)
- HOLCIM Rohoznil (2007)

Bulgaria
- CBMI, Devnya (2014)

RUSSIA & CENTRAL ASIA

Russia
- HOLCIM Kolomna (2014)
- HOLCIM MORDOV Cement (2012)
- ACC Penza (2020)

NORTH AMERICA

USA
- NCC/Vicat Ragland, Alabama (2021)

Canada
- LafargeHolcim Exshaw, Alberta (2021)

Mexico
- Cementos Fortaleza Tula (2016)
- LA CRUZ AZUL, Mexico (2010)
- HOLCIM Apasco, Hermosillo (2009)
- LAFARGE Tula, Mexico (2006)

ASIA

India
- KALBURGI Cement (2018)
- ULTRATECH Reddipalayam (2018)
- ACC Wadi (2017)
- ZUARI Cement, Yerraguntla & Sitapuram (2016 & 2014)
- VICAT Bharathi (2015 & 2013)
- ACC Cement, Madukkarai & Wadi (2015 & 2013)
- ULTRATECH Kovaya & Aditya (2015)
- AMBUJA Cement, Rauri

South Korea
- SAMPYO (2018 + 2020)

Thailand
- SCG Cement, Kaeng Khoi (2016)
- SCG On Nut (2016 + 2019)
- SCCC Saraburi (2007)
- ACC Pukrang (2020)

Philippines
- CRH Batangas (2016)
- HOLCIM Davao (2014)
- HOLCIM Lugait (2011)
- HOLCIM Bulacan (2010)

Vietnam
- SCCC Hong Chong (2007)

Sri Lanka
- HOLCIM (2010)

Indonesia
- Narogong (2017)

LATIN AMERICA

Colombia
- HOLCIM Bogota (2013)

Brazil
- HOLCIM Pedro Leopoldo (2008)

Ecuador
- Holcim Guayaquil (2017)

Argentina
- HOLCIM Capdeville (2018)
- HOLCIM Malagueno (2018)

MIDDLE EAST

Saudi Arabia
- Al Safwa (2016)
- City Cement (2015)
- AL JOUF Cement (2015)

UEA
- Sharjah Cement (2017)
- Sharjah IWPP (2018)

AFRICA

Morocco
- CIMAT Beni Mellal (2015)
- ITALCEMENTI CIMAR Cement, Marrakech (2014)
- ITALCEMENTI Safi, Ait Baha, Marrakech (2012)
- HOLCIM Fes, Settat & Oujda (2012 & 2011)
- LAFARGE Bouskoura (2004)

Egypt
- TITAN Beni Suef (2016)
- LAFARGE Sokhna (2013)
- CEMEX Assiut (2013)

Senegal
- VICAT Rufisque (2010)
- Ciment du Sahel (2021)

Algeria
- LAFARGE M'Sila (2015)

South Africa
- Intercement Simuma (2017)
- LAFARGE Lichtenburg (2007)

ALTERNATIVE FUELS
TURNKEY SOLUTIONS

Complete solutions for feeding alternative fuels in preheater tower and main burner!

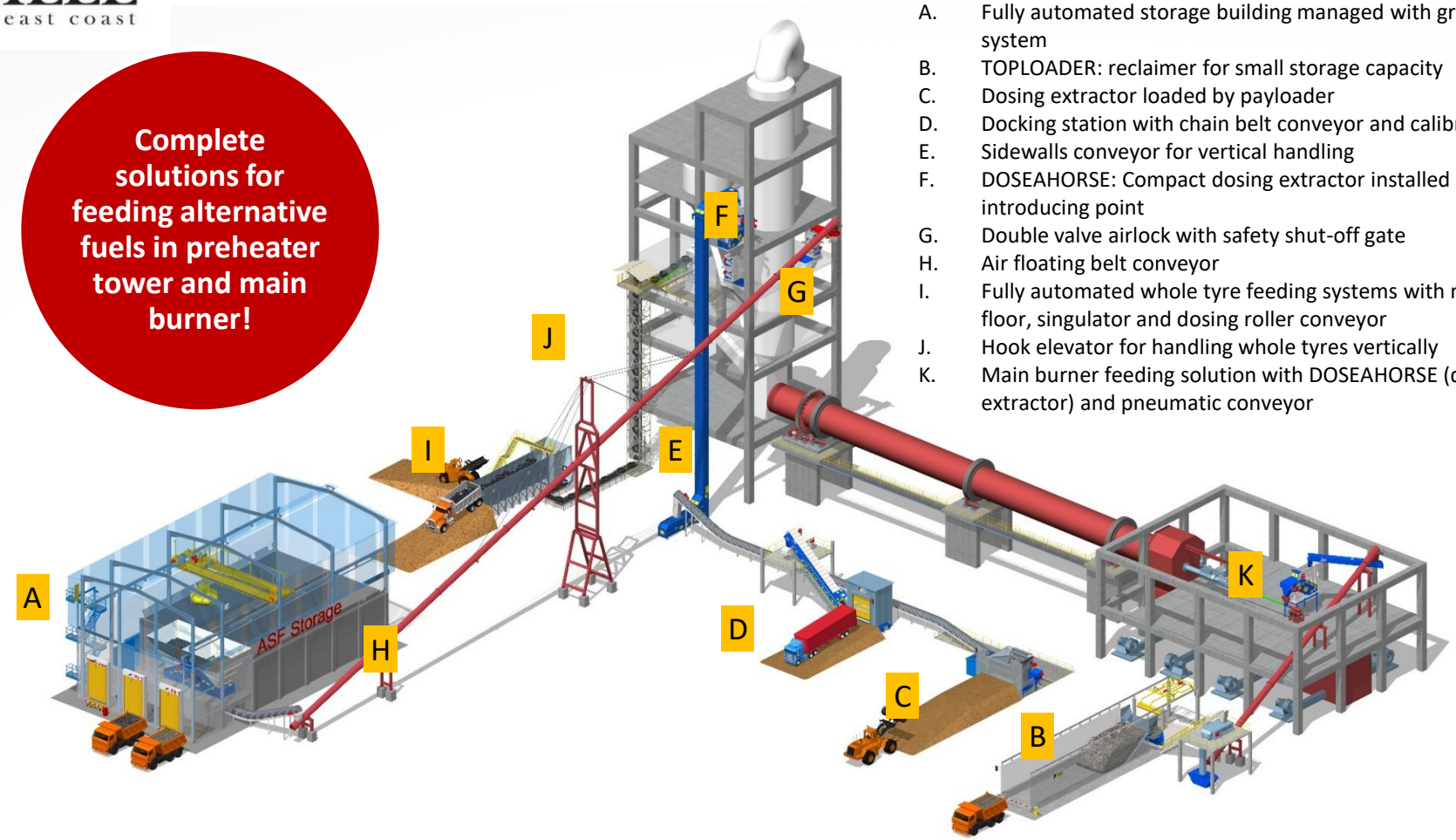

A. Fully automated storage building managed with grab crane system
B. TOPLOADER: reclaimer for small storage capacity
C. Dosing extractor loaded by payloader
D. Docking station with chain belt conveyor and calibrator
E. Sidewalls conveyor for vertical handling
F. DOSEAHORSE: Compact dosing extractor installed close to introducing point
G. Double valve airlock with safety shut-off gate
H. Air floating belt conveyor
I. Fully automated whole tyre feeding systems with moving floor, singulator and dosing roller conveyor
J. Hook elevator for handling whole tyres vertically
K. Main burner feeding solution with DOSEAHORSE (dosing extractor) and pneumatic conveyor

Flexible system:

- Grain size 1 to 500mm
- Density 0.1 to 1.5t/m³

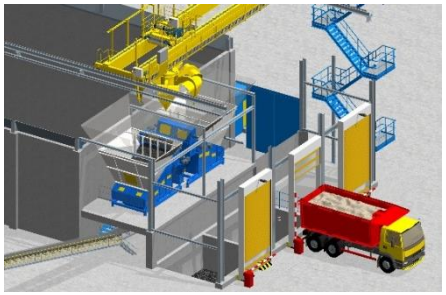

Storage

Extraction & dosing

Transfer

Feeding

Flexible Solutions

Your installation should enable you to choose your alternative fuel at any time and get the best price for it.

RDF

Shredded tyres

Fluff

Coconuts husks

Wood pieces

Rice husk

Cashew nuts shells

Car lamps

AGENDA

1- Brief Introduction of ATS / Walter Materials handling

2- Case study N°1 : NCC Rgaland, USA

- Blended fuel in Calciner

3- Case study N°2 : Lafarge Martres, France

- Whole tires feeding

3- Conclusion

NCC Ragland – ALTERNATIVE FUELS

New pyro-processing line

NATIONAL CEMENT
National Cement Company of Alabama, Inc.

NCC is building **a new pyro-processing production line** to produce **5000tpd**

The calciner is designed with a minimum **retention time of 5 sec.** for the burning up to 100% of solid and liquid waste fuels (RDF/TDF /Wood/Waste oil).

Solid waste fuels

RDF

Wood chips

Shredded Tire

Saw dust

Calciner

+ Main burner (Future)

NCC Ragland – ALTERNATIVE FUELS

Flow Sheet

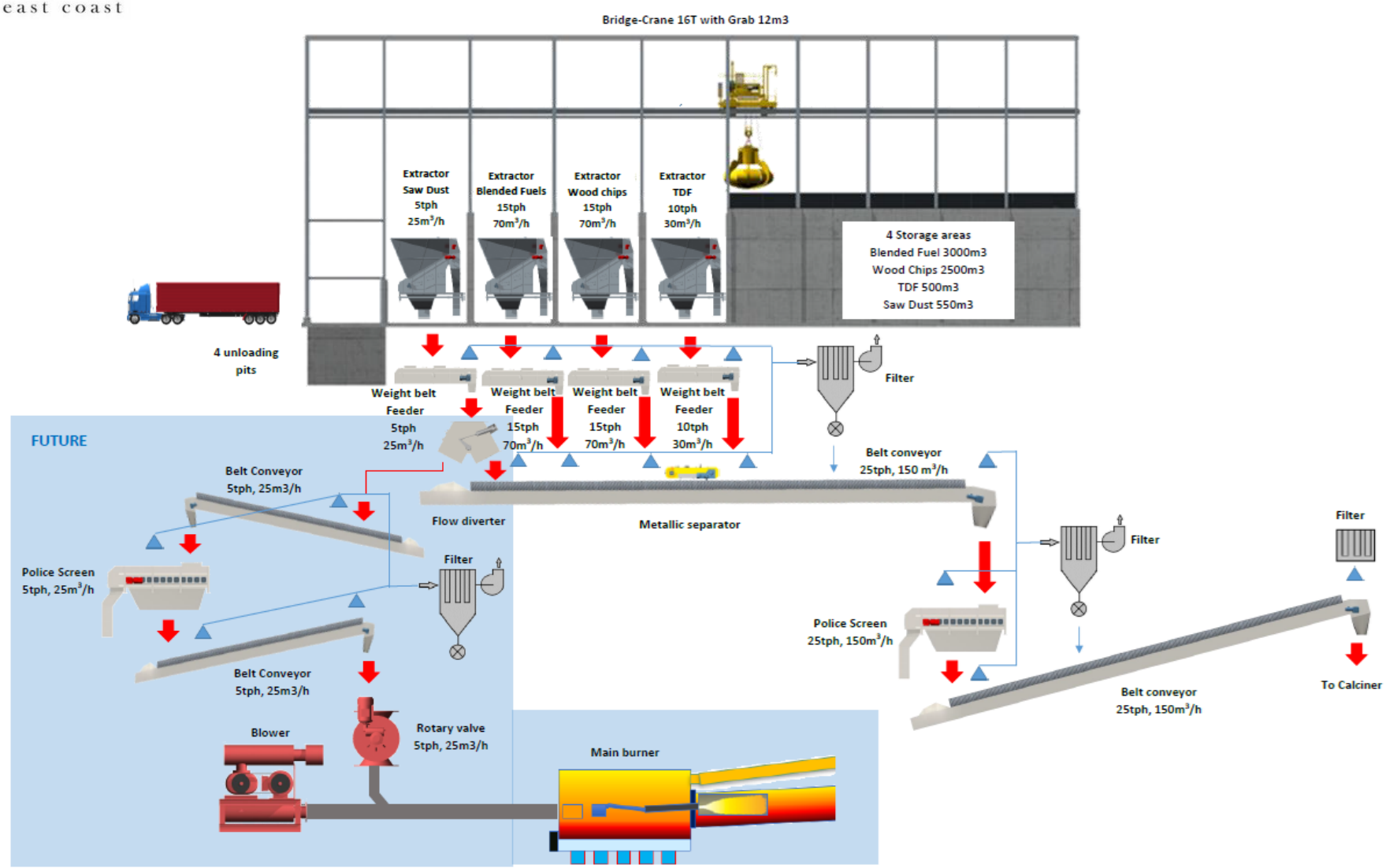

www.ats-group.com

NCC Ragland – ALTERNATIVE FUELS

Layout

NCC Ragland – ALTERNATIVE FUELS

Fuel Blending

Storage building with

- Crane capacity : 16T
- Grab volume : 12m³
- Anti-sway system
- 4 Extractors and weigh belt feeders

NCC Ragland – ALTERNATIVE FUELS

Metallic Apron Extractor

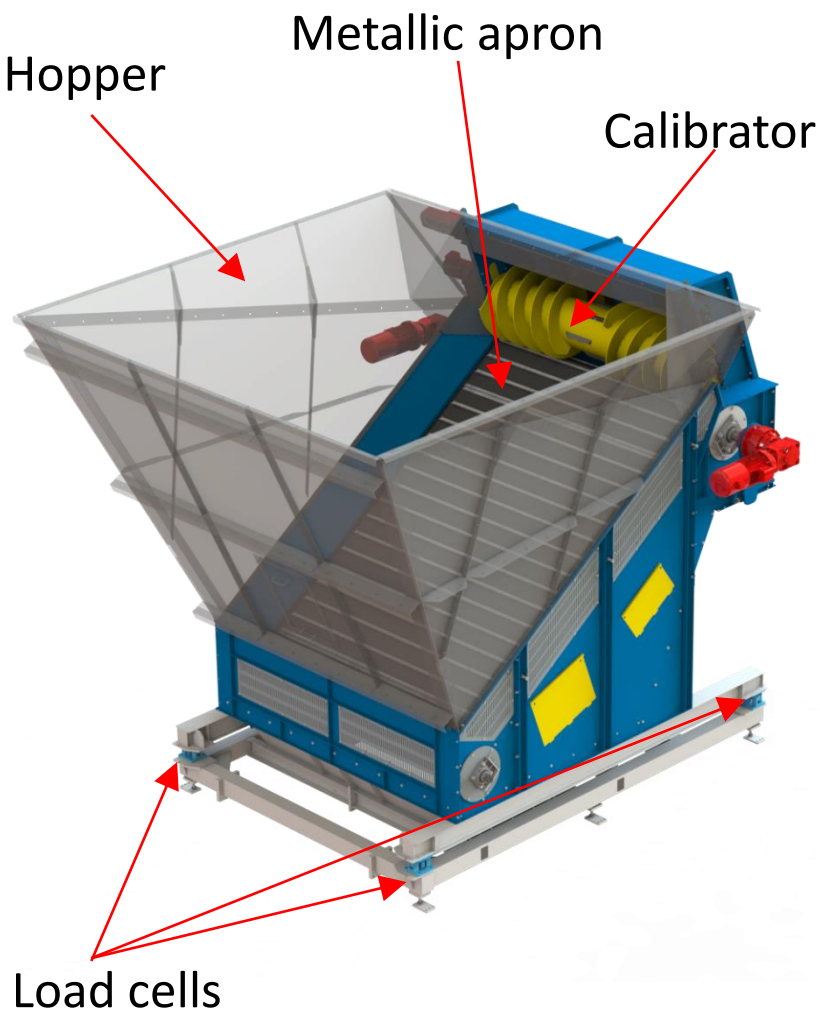

- ✓ High flexibility with extractor
- ✓ Fine and coarse material acceptable
- ✓ Perfect sealing with rubber belt
- ✓ Accurate dosing

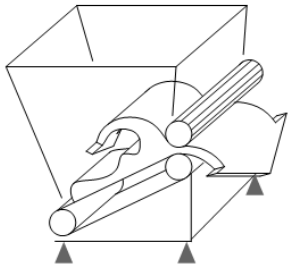

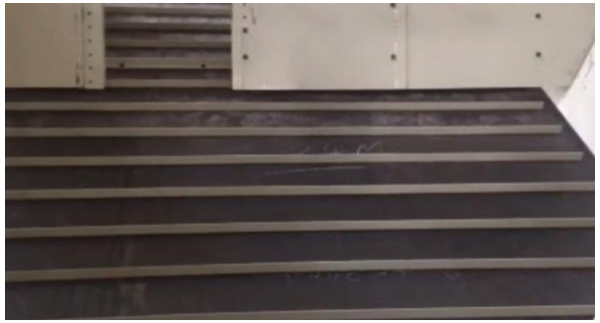

NCC Ragland – ALTERNATIVE FUELS

Dosing

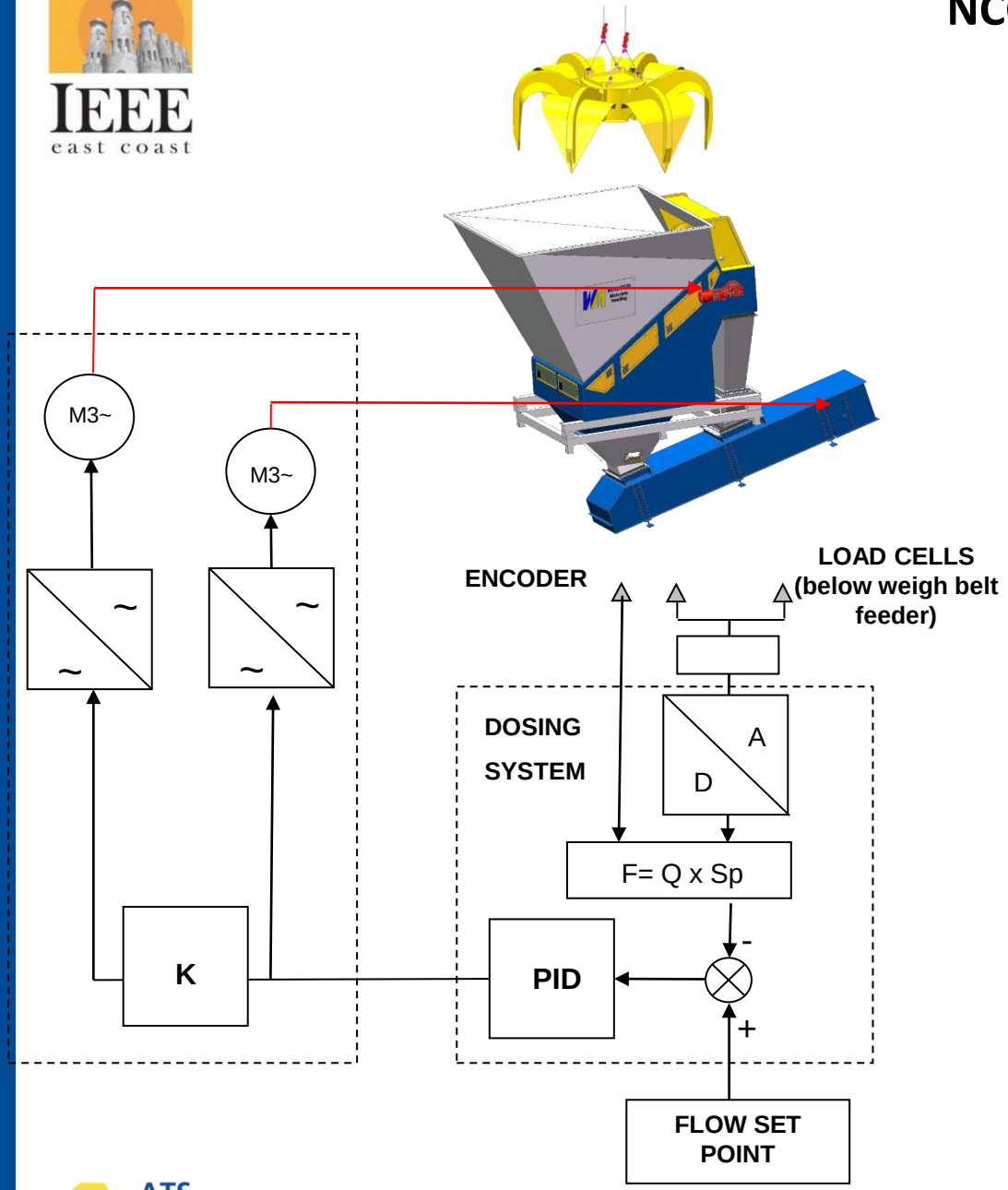

A controlled constant flow!

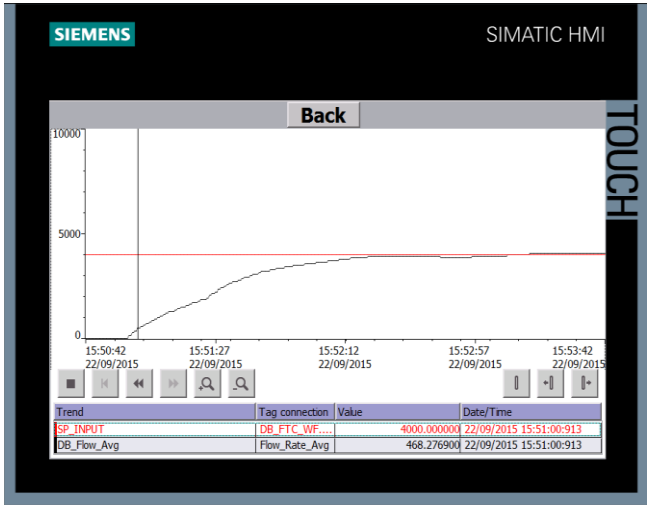

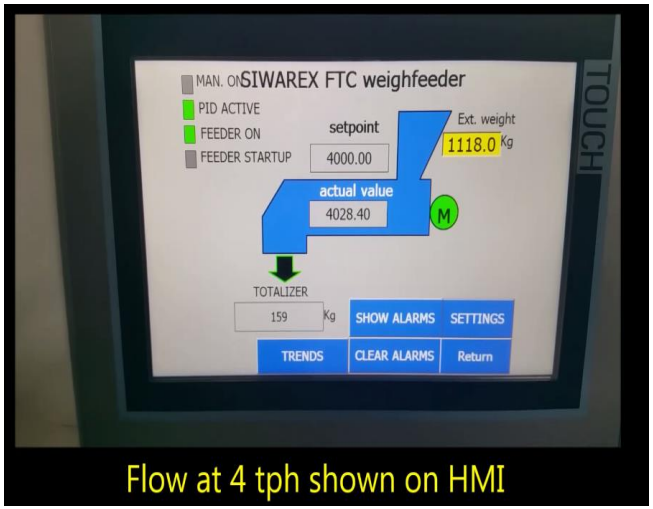

Flow at 4 tph shown on HMI

NCC Ragland – ALTERNATIVE FUELS

Anti-Sway System

Anti-sway control !

Principle

Any acceleration or deceleration process of a crane generates swaying of the load.

Anti-Sway Control System adjusts automatically the crane travelling movements (translation and direction) by using a mathematical calculation to estimate load swing.

Benefits

- Higher productivity by reducing cycle time
- Improvement of positioning accuracy
- Reduction of risk of damage
- Extension of service life of crane

AGENDA

1- Brief Introduction of ATS / Walter Materials handling

2- Case study N°1 : NCC Rgaland, USA

- Blended fuel in Calciner

3- Case study N°2 : Lafarge Martres, France

- Whole tires feeding

3- Conclusion

Lafarge Martres – WHOLE TIRES FEEDING

Flow sheet

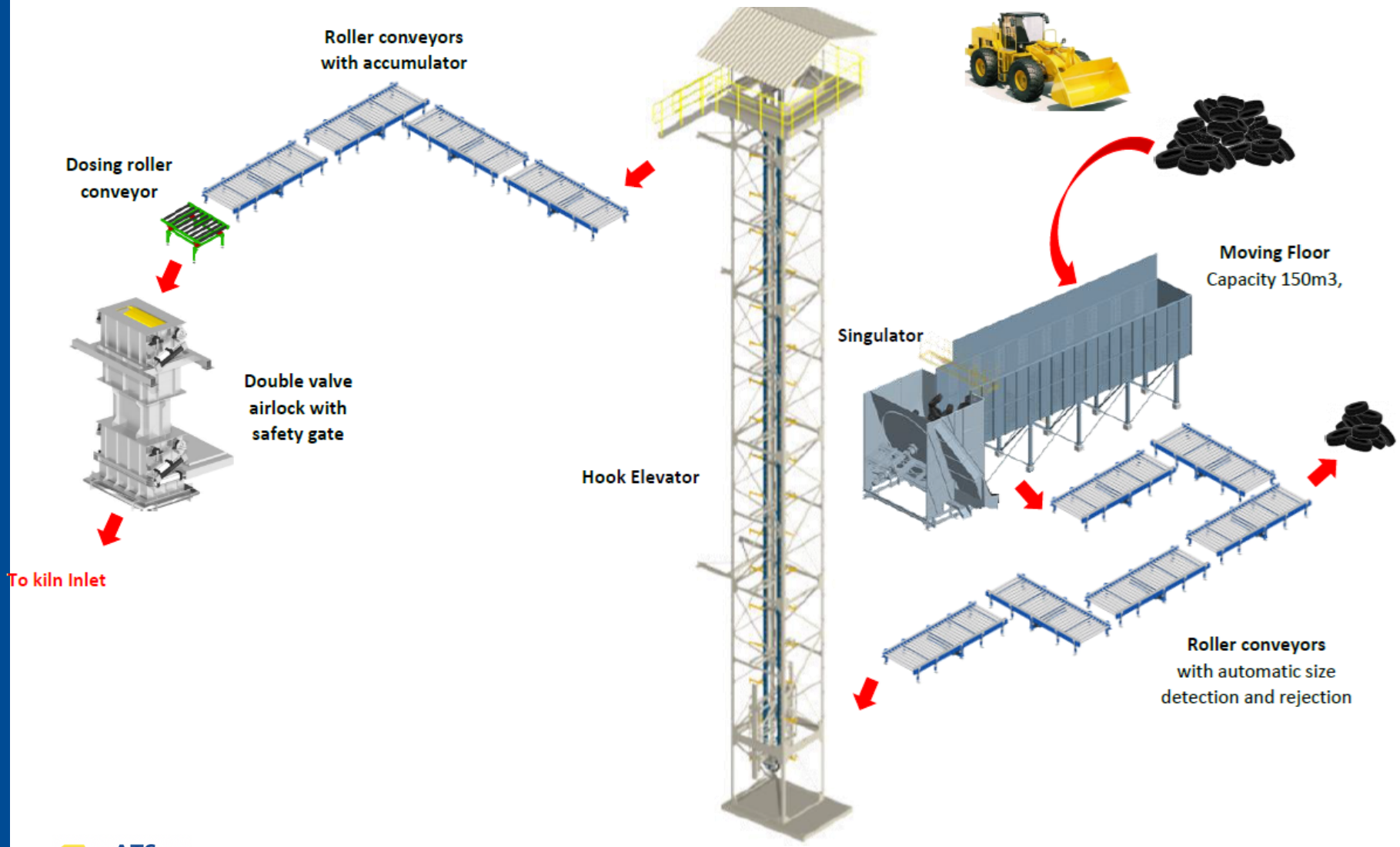

www.ats-group.com

Lafarge Martres – WHOLE TIRES FEEDING

Automatic solution

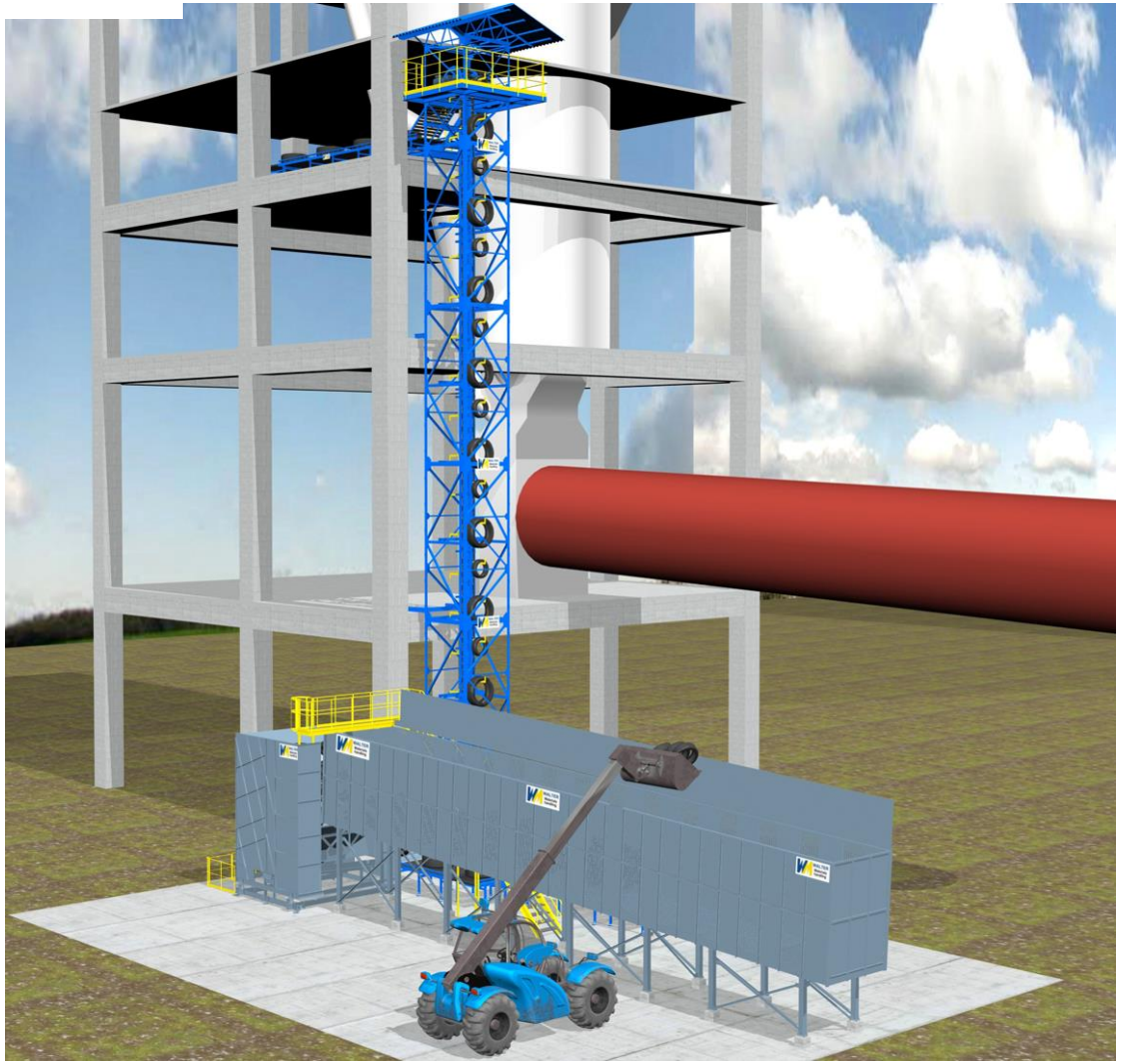

Equipment

- Mooving floor
- Singulator
- Hook elelvator
- Roller conveyor
- Double valve airlock

Lafarge Martres – WHOLE TIRES FEEDING

Automatic solution

Hoock elevator

Singulator

Moving floor

www.ats-group.com

AGENDA

1- Brief Introduction of ATS / Walter Materials handling

2- Case study N°1 : NCC Rgaland, USA

- Blended fuel in Calciner

3- Case study N°2 : Lafarge Martres, France

- Whole tires feeding

3- Conclusion

CONCLUSION

Flexibility

Equipment design & selection should start first with the specific situation of the plant, i.e. calciner and kiln, but with safety factors offering **great degree of flexibility** in the type, size, quantity of AF.

Projects in North America have their own challenges.

- **Project schedule :** We are used to work on e pre-engineering study ahead of time in order to allow the plant to get the necessary permits, as it is more cumbersome than most countries, we have worked in.
- **Erection and services costs :** For Lafarge Exshaw for instance, we are delivering the conveyor in pre-assembled pieces that fitting with truck or container dimensions.
  Shop pre-assembly costs much less than site works.

Thank you for your attention

Luc REIBEL
COO & Head of Sales
+33 672 08 92 09
l.reibel@ats-group.com

www.ats-group.com

Copyright © 2018 ATS Group, all rights reserved.