GKF 705

Capsule Filling Machine
Replacement Spare Parts & Service

Custom Parts/Specialty Parts Available
On Request

INTERNATIONAL INVENTORY MANAGEMENT

456 MANNING AVENUE
ELON, NC 27244 USA
TEL 001 336 584 4777
sales@iimnc.com

www.iimnc.com

revised 7/8/2022

OEM names and part numbers are used to identify replacement parts. Our products are not affiliated with, sponsored or approved by the original equipment manufacturer.

Table of Contents

GKF 705 - 5 COUNT

Section	Description
1	Faulty Capsule Ejection Drive
1	Lower Closing Drive
1	Main Shaft
2	Main Drive (Motor & Drive Train)
3	Tamping Cam
3	Ejection Drive
4	Separation Drive
5	Sorting Drive
6	Cam Plan
7	Segment Carrier / Turret / Gearbox
8	Sorting Station
8	Capsule Hopper
9	Faulty Capsule Ejection
10	Powder Dosing
10	Tamping Drive
11	Powder Dosing / Guide Ring / Wiper Block
12	Tamping Transfer Block
12.1	Tamping Adjustable Block
12.2	Powder Level Sensor
13	Powder Infeed / Auger / Hopper
13.1	Powder Auger - New Version
13.2	Auger Upgrades
14	Closing Station
14.1	Closing Pins
15	Cleaning Station
16	Ejection Station
17	Capsule Separation
18	Capsule Ejection Housing
19	Separation Vacuum System - New Version
20	Separation Vacuum System - Old Version
21	Vacuum Clean System
22	Compressed Air System
23	Size Change Parts 5CT
24	Size Change Parts 5CT
	Index

New Version > 2014
Old Version ≤ 2014
unless otherwise noted

Section 1: Faulty Capsule Ejection Drive
Lower Closing Drive
Main Shaft

GKF705 - revised 7/2/2021

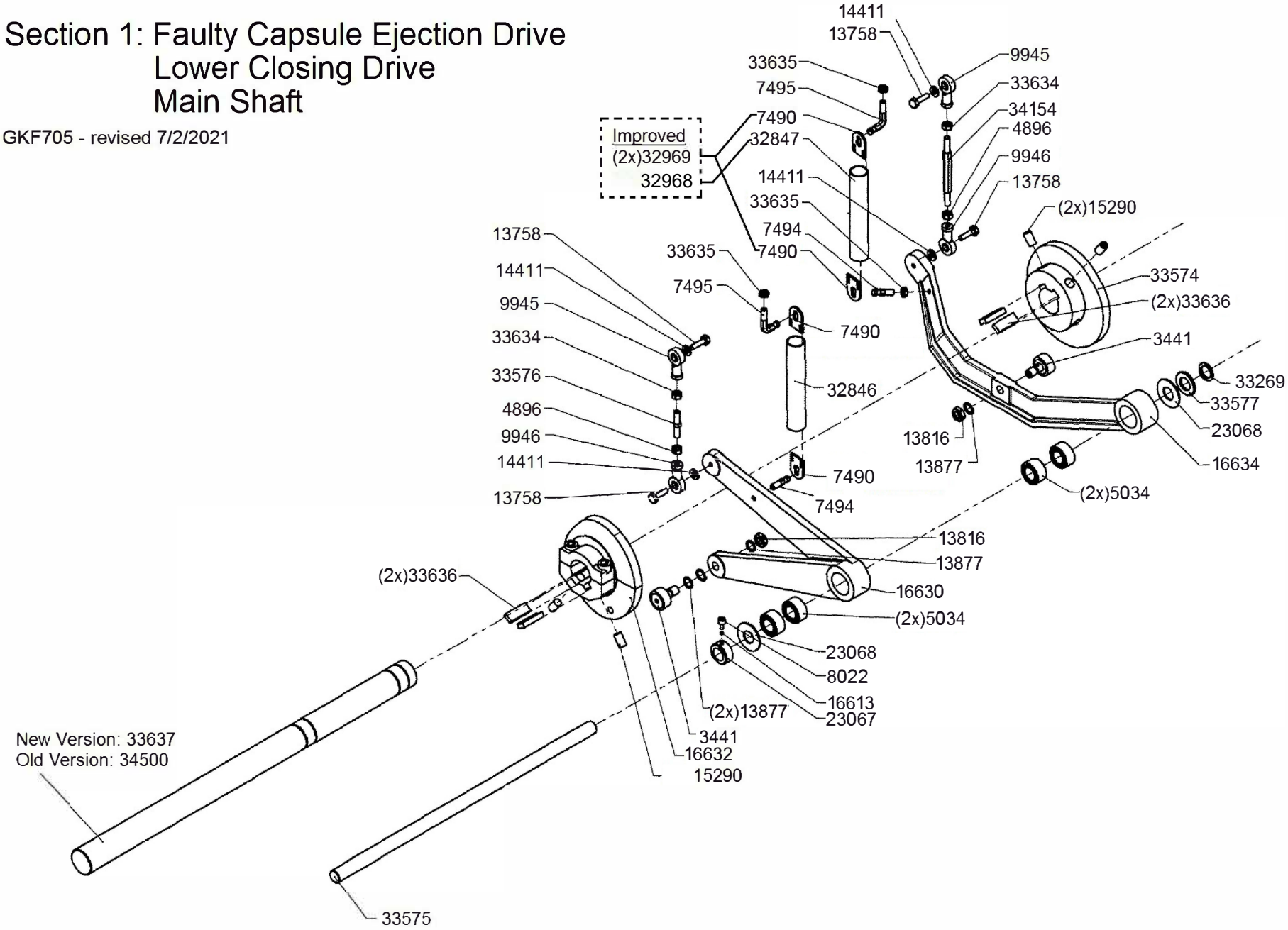

IIM
tel (336) 584-4777
fax (336) 584-9540
sales@iimnc.com
www.iimnc.com

New Version > 2014
Old Version ≤ 2014

Section 2: Main Drive (Motor & Drive Train)

GKF705 - revised 2/11/2022

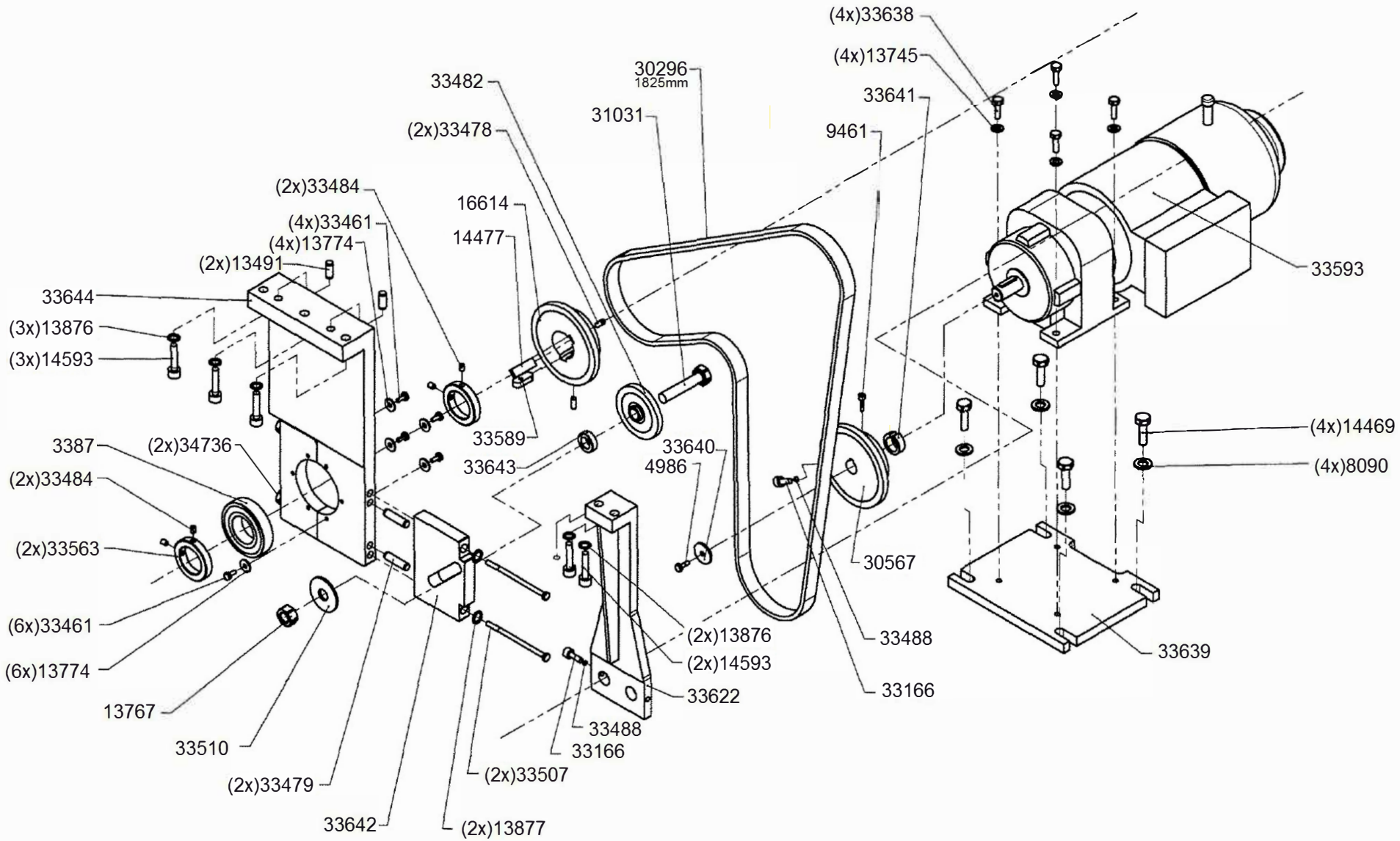

IIM
tel (336) 584-4777
fax (336) 584-9540
sales@iimnc.com
www.iimnc.com

Section 3: Tamping Cam / Ejection Drive

GKF705 - revised 7/2/2021

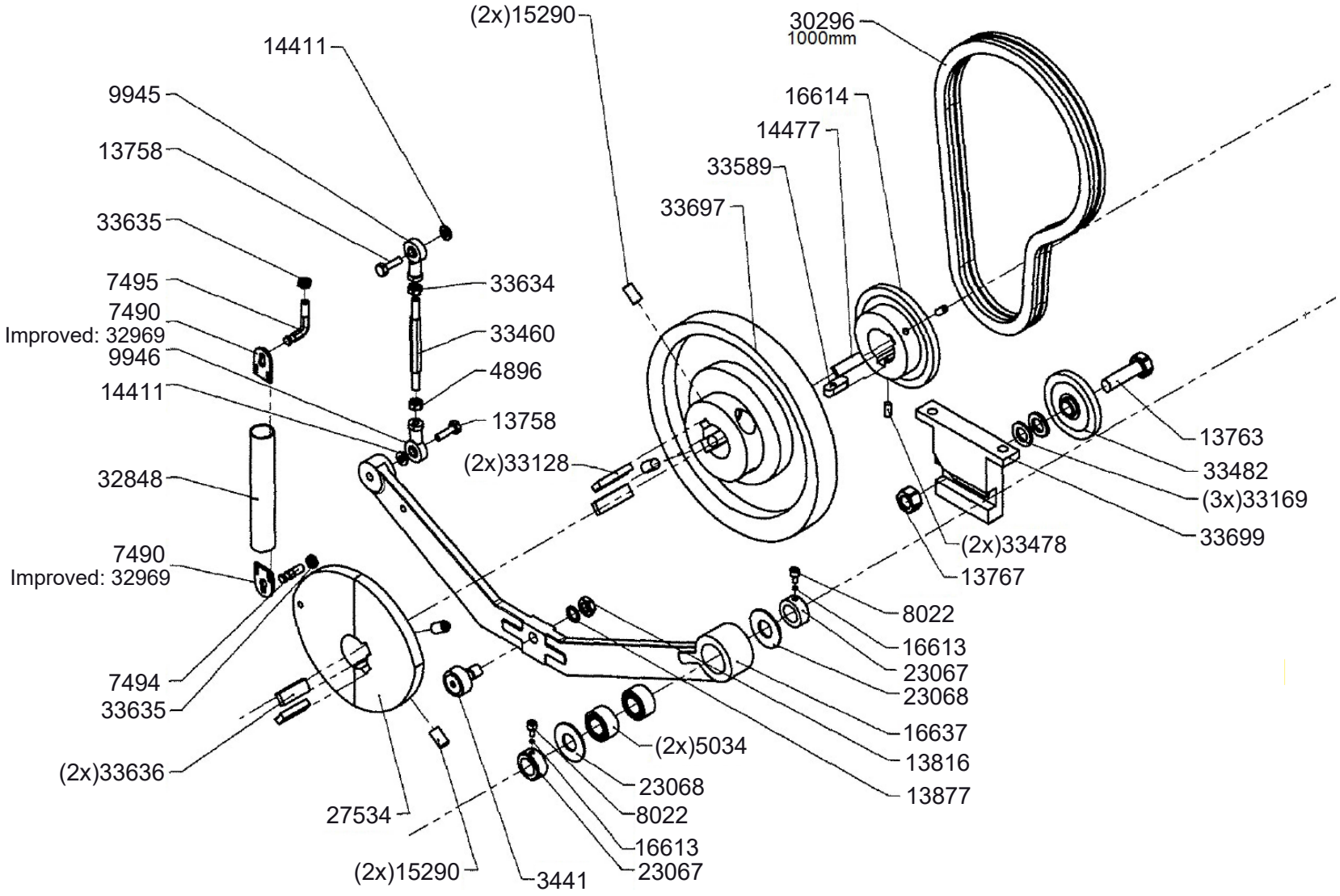

IIM
tel (336) 584-4777
fax (336) 584-9540
sales@iimnc.com
www.iimnc.com

Section 4: Separation Drive

GKF705 - revised 2/11/2022

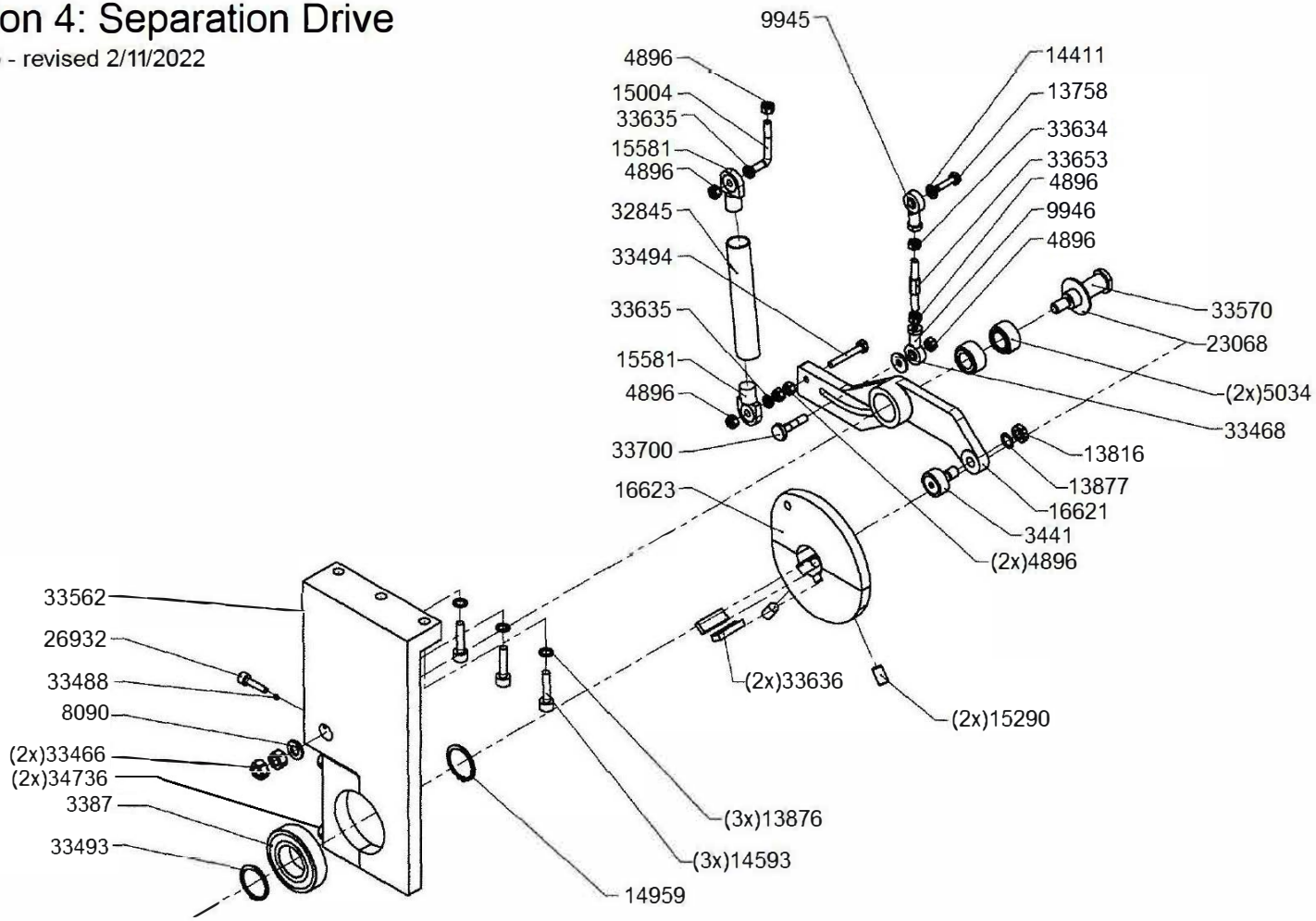

IIM

tel (336) 584-4777

fax (336) 584-9540

sales@iimnc.com

www.iimnc.com

Section 5: Sorting Drive

GKF705 - revised 2/11/2022

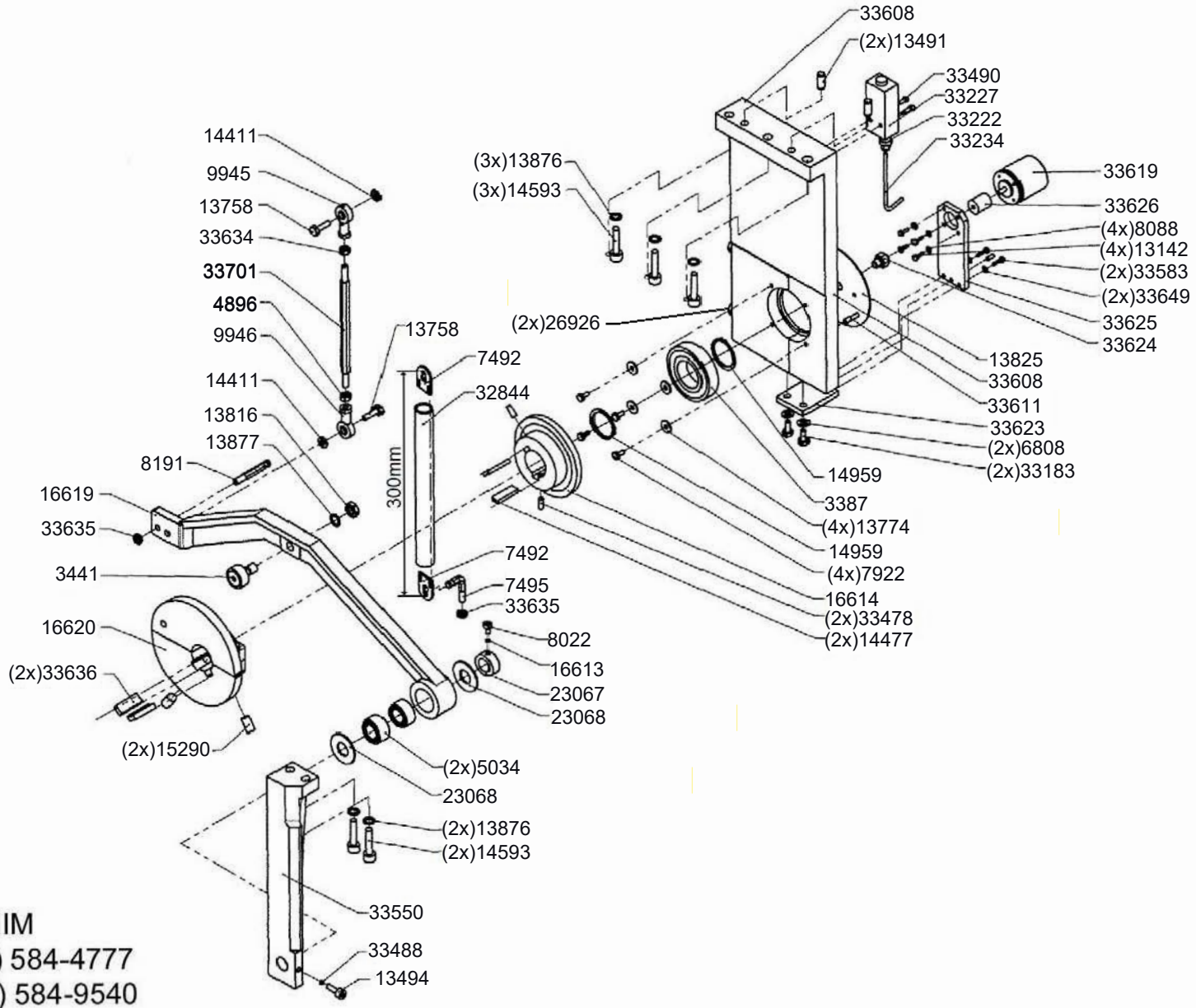

IIM
tel (336) 584-4777
fax (336) 584-9540
sales@iimnc.com
www.iimnc.com

Section 6: Cam Plan

GKF705 - revised 7/20/2022

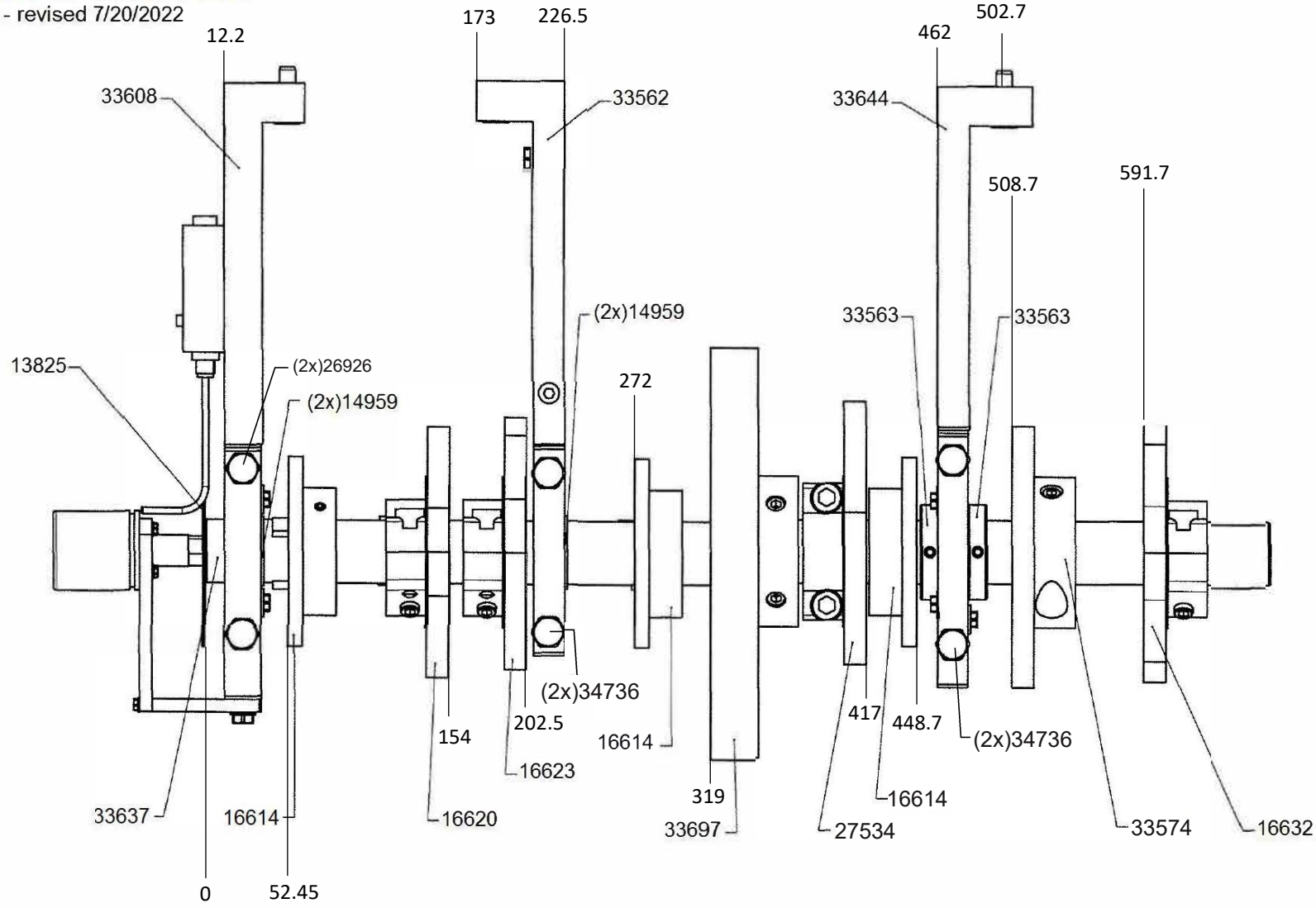

IIM
tel (336) 584-4777
fax (336) 584-9540
sales@iimnc.com
www.iimnc.com

Section 7: Segment Carrier/Turret/Gearbox

GKF705 - revised 7/2/2021

	Description	Capsule Size					
		00	0	1	2	3	4
Pos. 1	Upper Segment Block	25551	25555	25557	25559	25561	25563
Pos. 2	Lower Segment Block	25553	25554	25556	25558	25560	25562

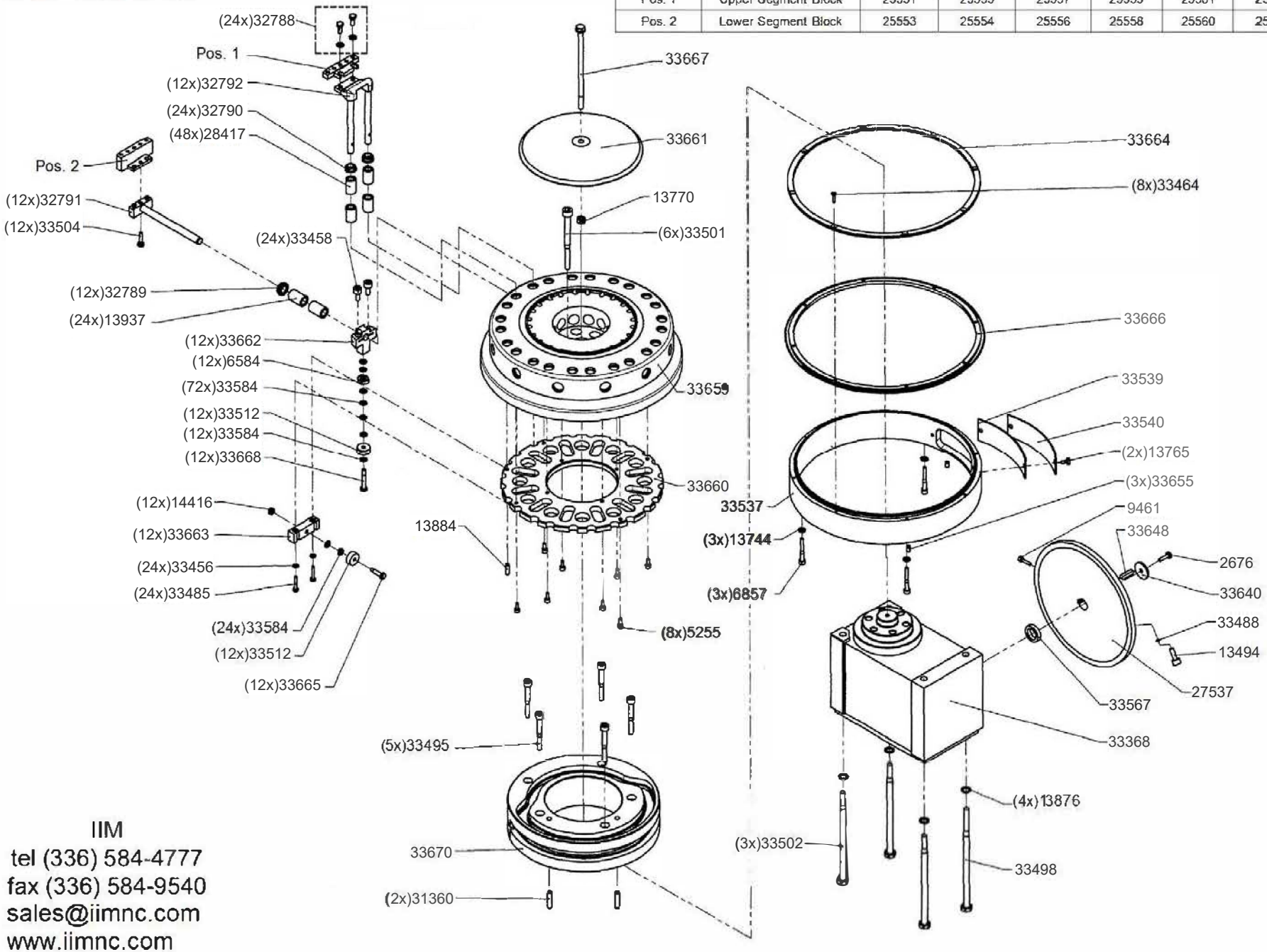

IIM
tel (336) 584-4777
fax (336) 584-9540
sales@iimnc.com
www.iimnc.com

Section 8: Sorting Station / Capsule Hopper

GKF705 - revised 7/2/2021

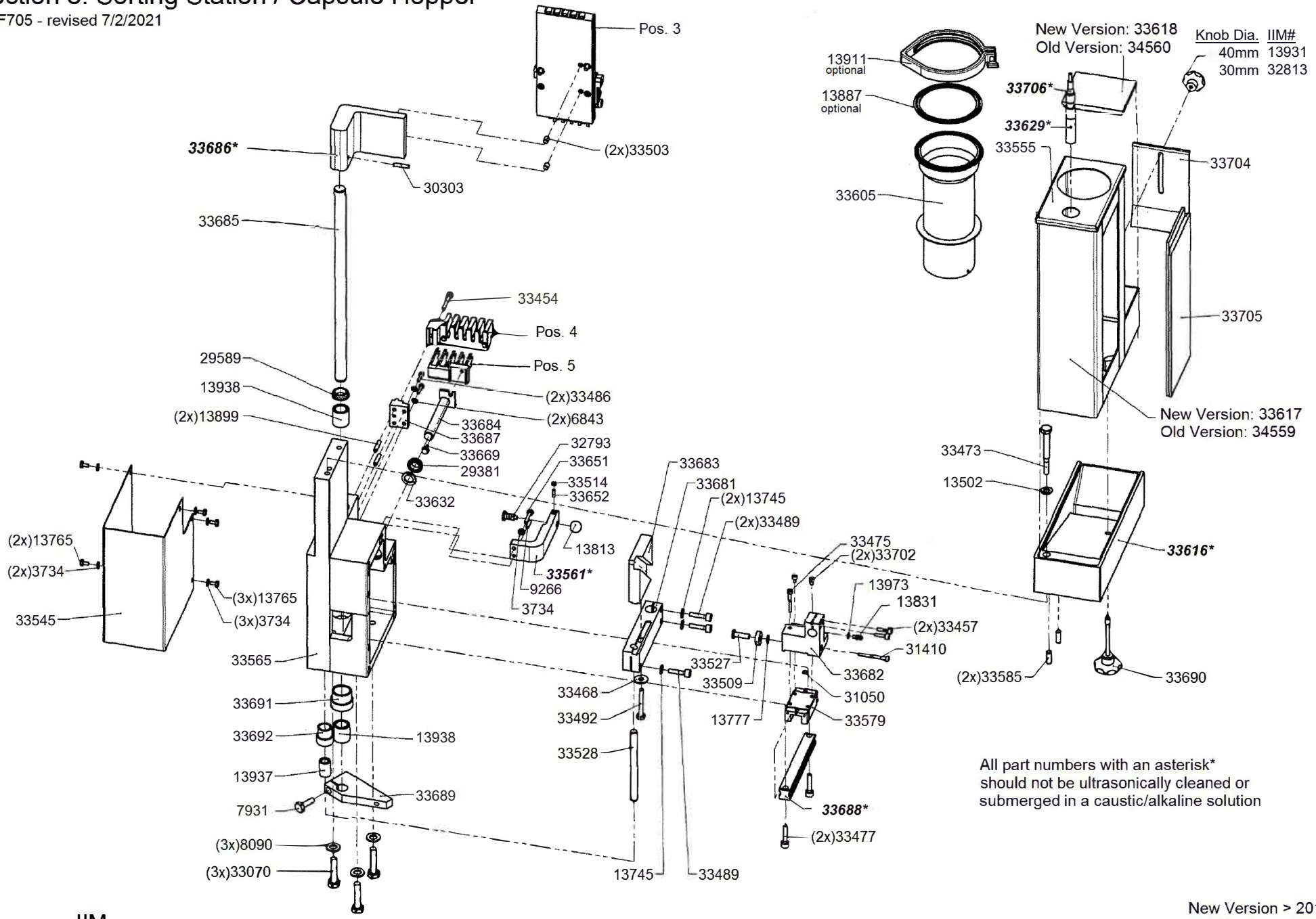

All part numbers with an asterisk* should not be ultrasonically cleaned or submerged in a caustic/alkaline solution

IIM
tel (336) 584-4777
fax (336) 584-9540
sales@iimnc.com
www.iimnc.com

New Version > 2014
Old Version ≤ 2014

		Capsule Size						
	Description	000	00/00E	0/0E	1/1E	2/2E	3	4
Pos. 3	Magazine COMPLETE	33909	33910	33911	33912	33913	33914	33915
Pos. 4	Sorting Block	33923	33924	33925	33926	33927	33928	33929
Pos. 5	Orientation Fingers	33896	33897	33898	33899	33900	33901	33902

Section 9: Faulty Capsule Ejection

GKF705 - revised 7/2/2021

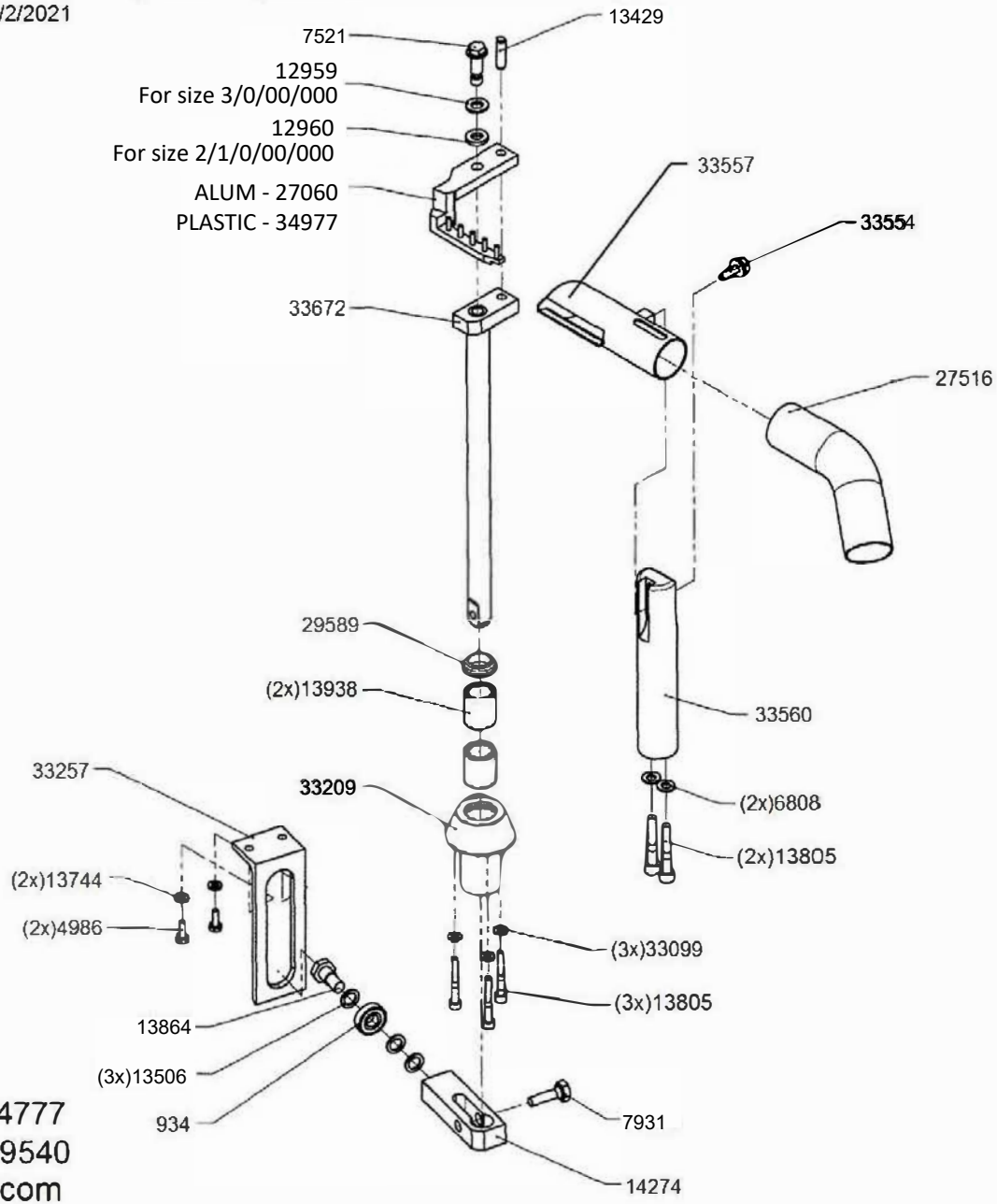

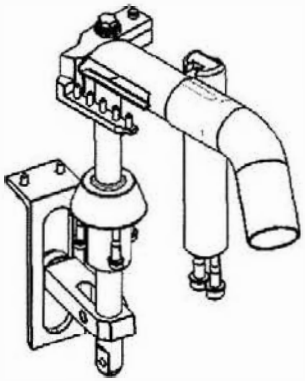

IIM
tel (336) 584-4777
fax (336) 584-9540
sales@iimnc.com
www.iimnc.com

Section 10: Powder Dosing / Tamping Drive

GKF705 - revised 7/2/2021

Note: Fast Track Dosing Disc Manufacturing available. Please contact us for speedy delivery service.

Fixed Dosing Disc

IIM#	Capsule Size
33720	00
33721	0
33722	1
33723	2
33724	3
33725	4

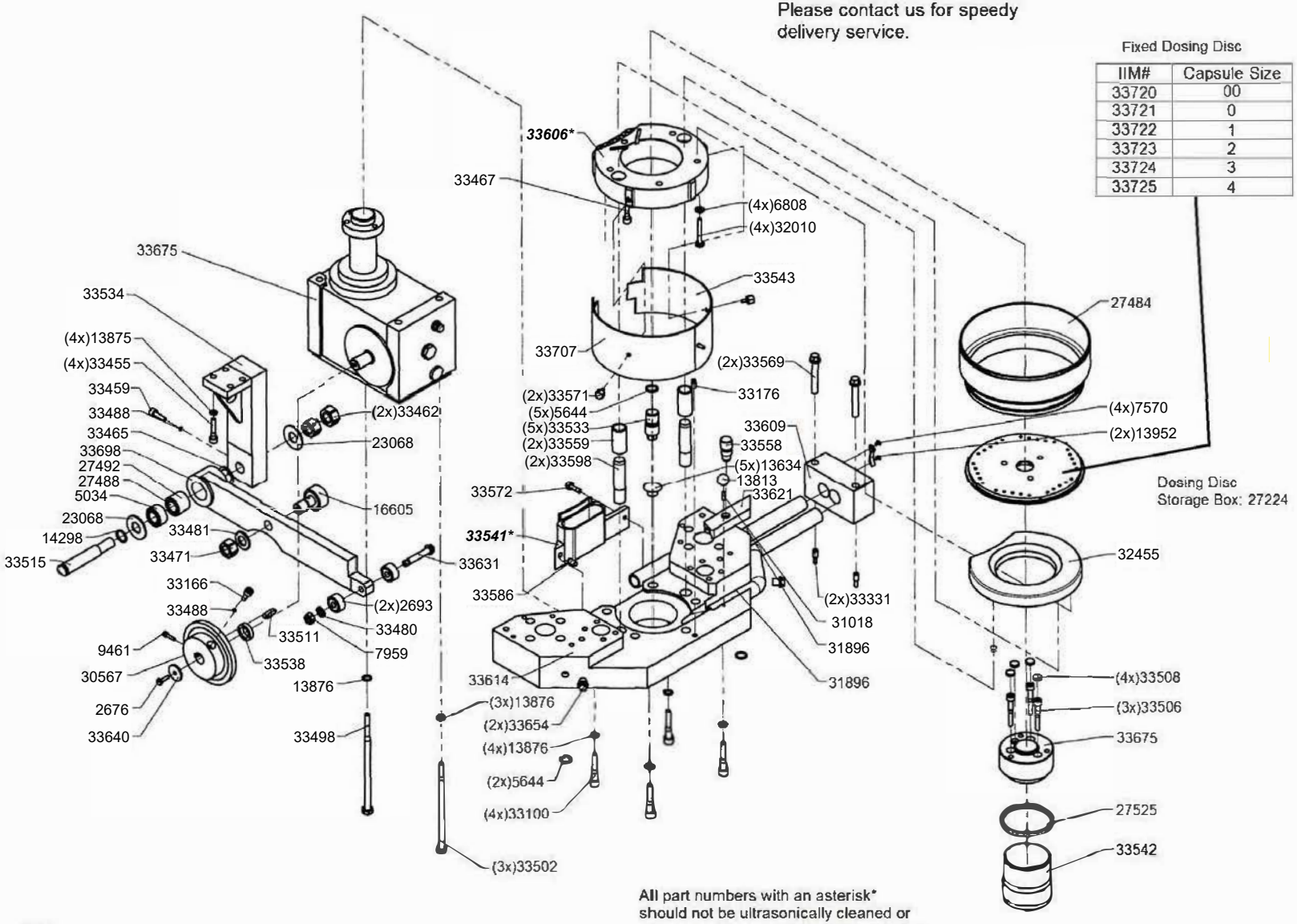

All part numbers with an asterisk* should not be ultrasonically cleaned or submerged in a caustic/alkaline solution

IIM
tel (336) 584-4777
fax (336) 584-9540
sales@iimnc.com
www.iimnc.com

Section 11: Powder Dosing / Guide Ring / Wiper Block

GKF705 - revised 1/5/2022

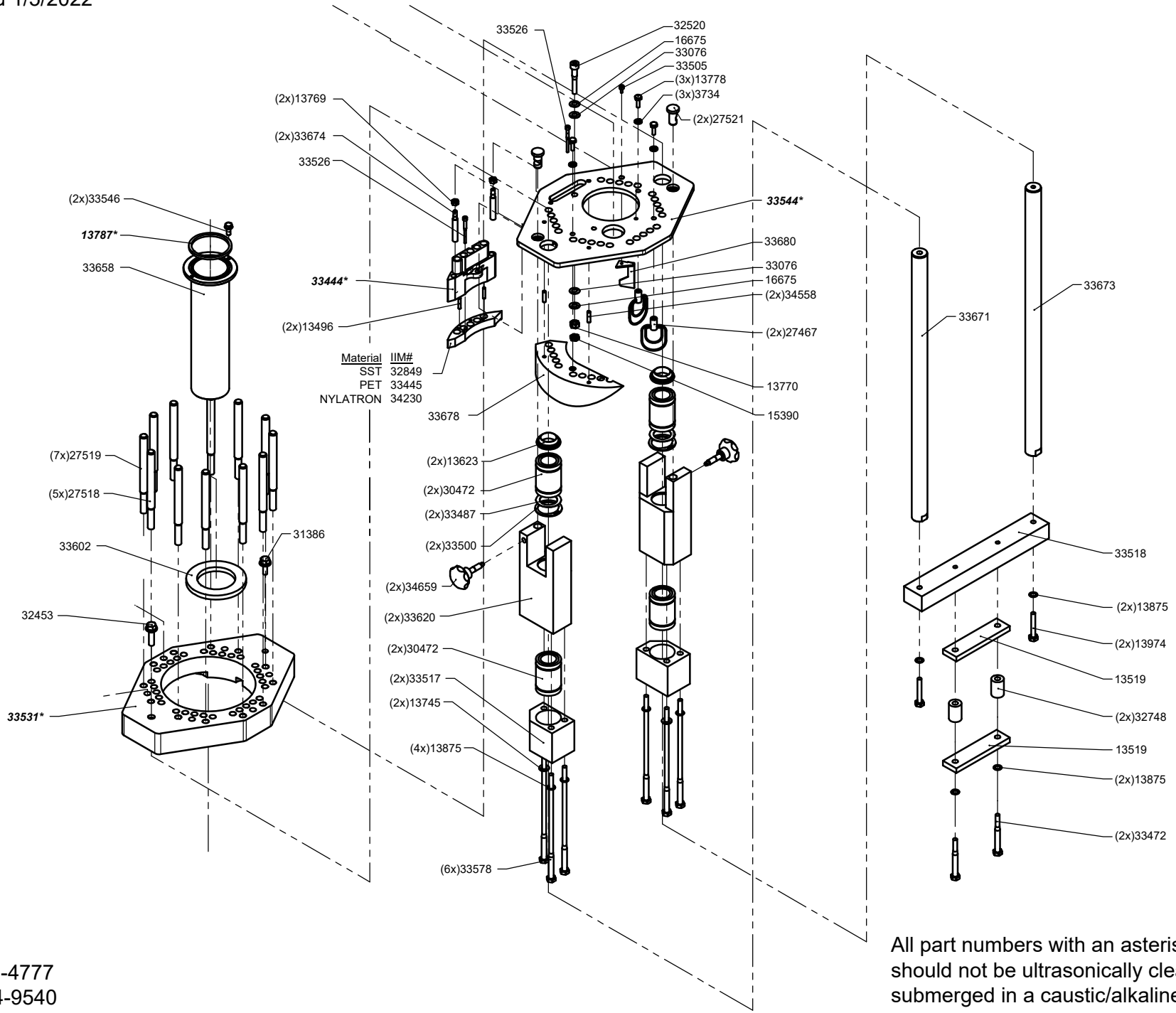

Material	IIM#
SST	32849
PET	33445
NYLATRON	34230

IIM
tel (336)584-4777
fax (336)584-9540
sales@iimnc.com
www.iimnc.com

All part numbers with an asterisk* should not be ultrasonically cleaned or submerged in a caustic/alkaline solution

Section 12: Tamping Transfer Block

GKF705 - revised 7/2/2021

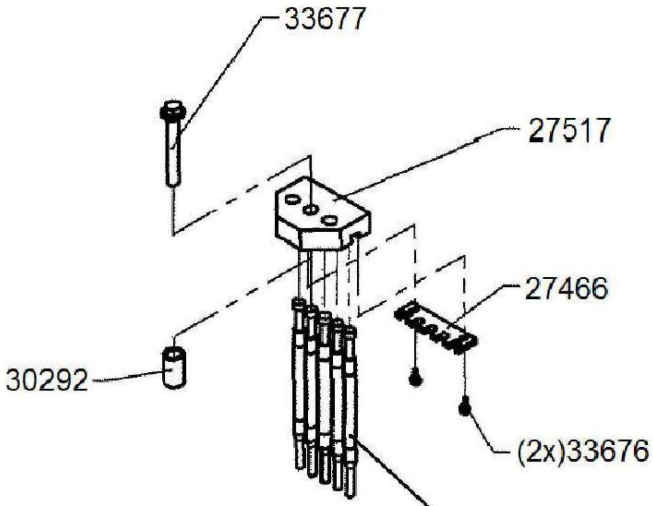

	IIM# for Tamping Pins	
Capsule Size	Standard	Mirrored
00	3879	29849
0	3839	29723
1	3840	29845
2	3878	29694
3	5150	29846
4	5126	29847

IIM
tel (336) 584-4777
fax (336) 584-9540
sales@iimnc.com
www.iimnc.com

Section 12.1: Adj. Tamping Block

GKF705 - revised 7/19/2022

(5x)

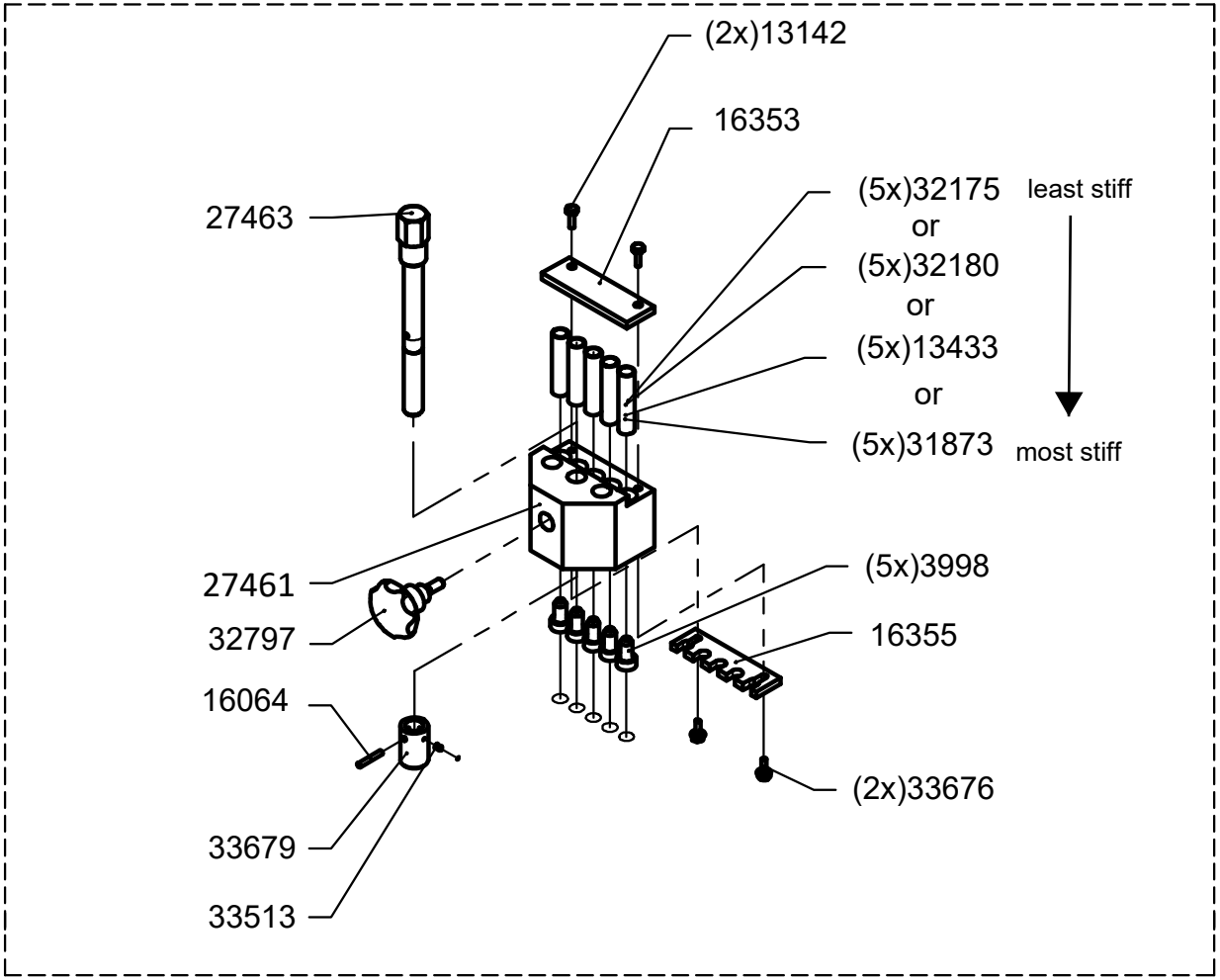

IIM
tel (336)584-4777
fax (336)584-9540
sales@iimnc.com
www.iimnc.com

Section 12.2: Powder Level Sensor

GKF705 - revised 7/2/2021

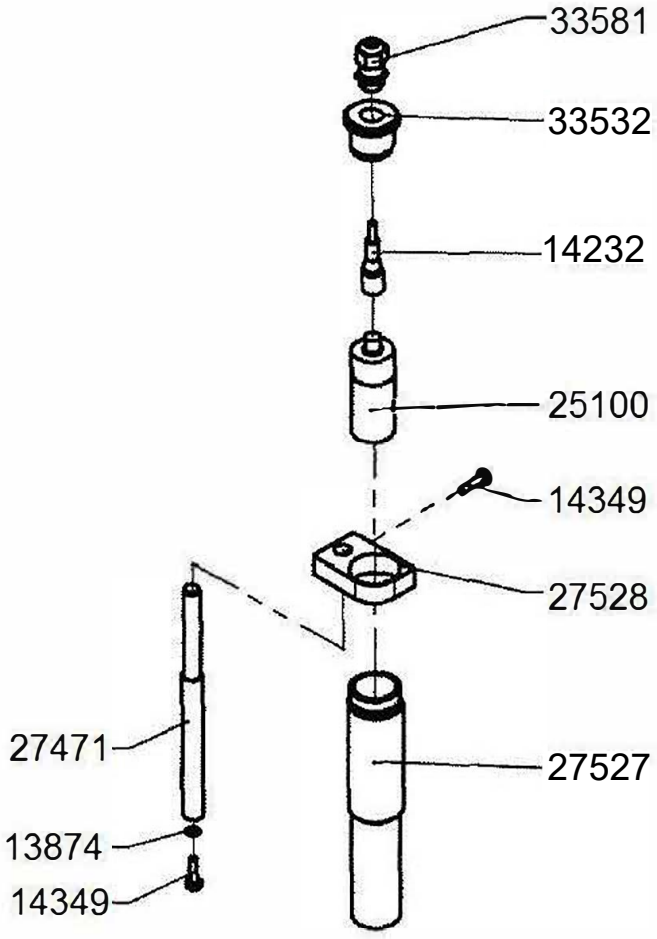

IIM
tel (336) 584-4777
fax (336) 584-9540
sales@iimnc.com
www.iimnc.com

Section 13: Powder Infeed / Auger / Hopper

GKF705 - revised 1/21/22

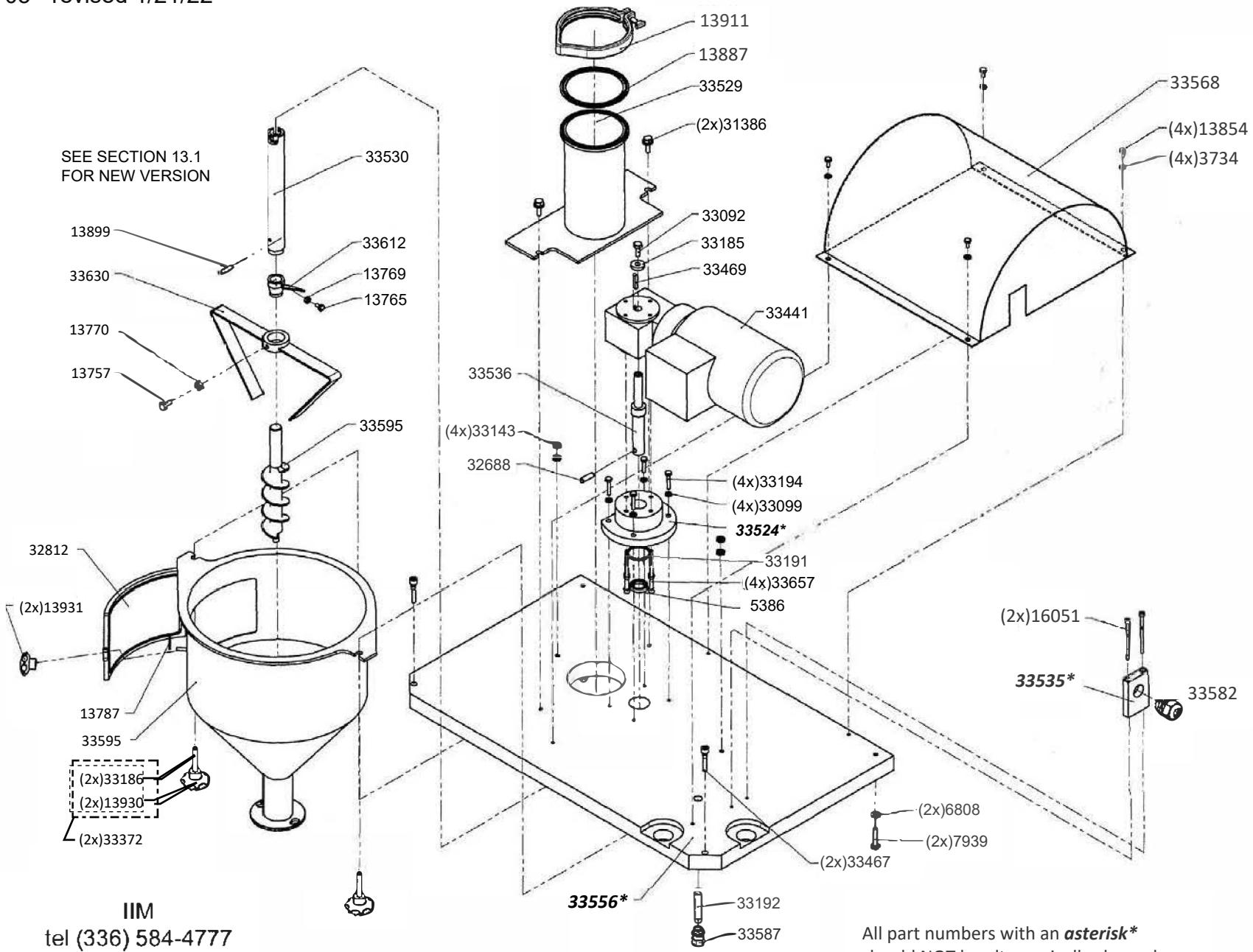

IIM
tel (336) 584-4777
fax (336) 584-9540
sales@iimnc.com
www.iimnc.com

All part numbers with an ***asterisk**** should NOT be ultrasonically cleaned or submerged in a caustic solution.

Section 13.1: Powder Auger - New Version

GKF705 - revised 1/21/22

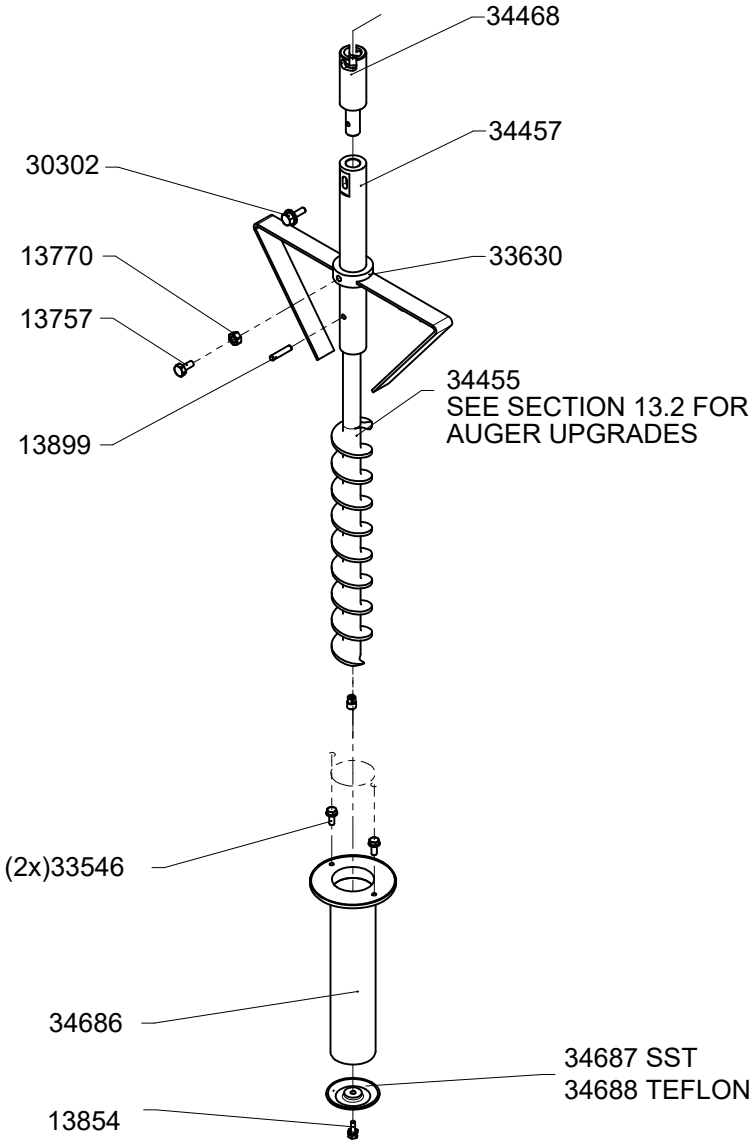

IIM
tel (336)584-4777
fax (336)584-9540
sales@iimnc.com
www.iimnc.com

Section 13.2: Auger Upgrades

GKF705 – revised 7/29/2022

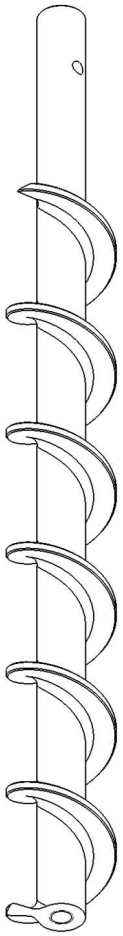

34665
6 TWIST
61 PITCH

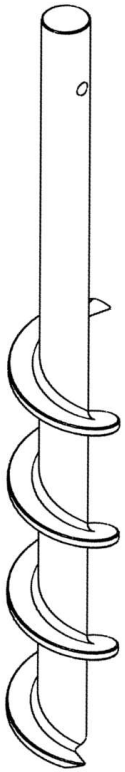

34897
4 TWIST
56 PITCH

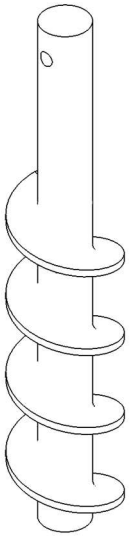

33595
4 TWIST
35 PITCH

34455
11 TWIST
35 PITCH

IIM
tel (336)584-4777
fax (336)584-9540
sales@iimnc.com
www.iimnc.com

Section 14: Closing Station

GKF705 - revised 7/2/2021

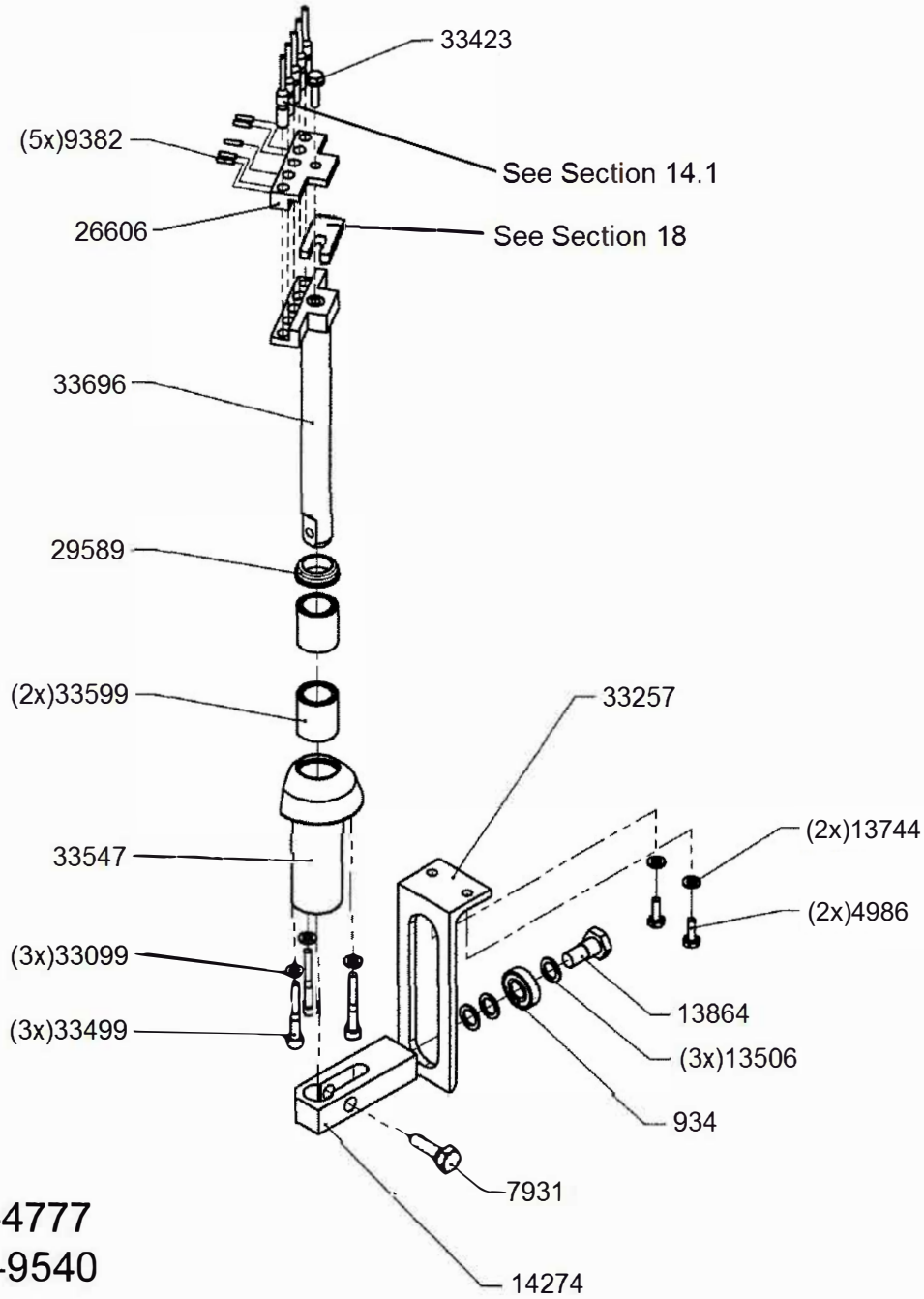

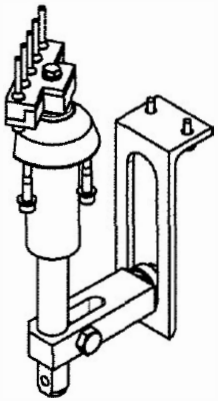

IIM
tel (336) 584-4777
fax (336) 584-9540
sales@iimnc.com
www.iimnc.com

Section 14.1: Closing Pins

GKF705 - revised 7/2/2021

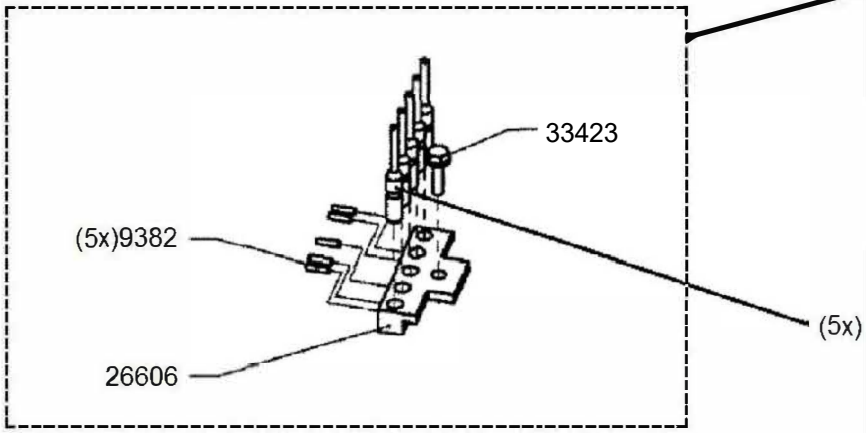

Complete Assembly

Capsule Size	IIM# Material: Stainless Steel	IIM# Material: Aluminum	IIM# Material: Stainless Steel
000	ON REQUEST	ON REQUEST	33715
00	33709	33712	
0			33716
1	33710	33713	
2			33717
3	33711	33714	
4			
5	ON REQUEST	ON REQUEST	

Lower Closing Pins

Capsule Size	IIM# Material: Stainless Steel	IIM# Material: Aluminum	IIM# Material: Stainless Steel
000	ON REQUEST	ON REQUEST	29580
00	16228	28121	
0			29581
1	16230	32634	
2			30130
3	16232	32635	
4			
5	ON REQUEST	ON REQUEST	

IIM
tel (336) 584-4777
fax (336) 584-9540
sales@iimnc.com
www.iimnc.com

Section 15: Cleaning Station

GKF705 - revised 7/2/2021

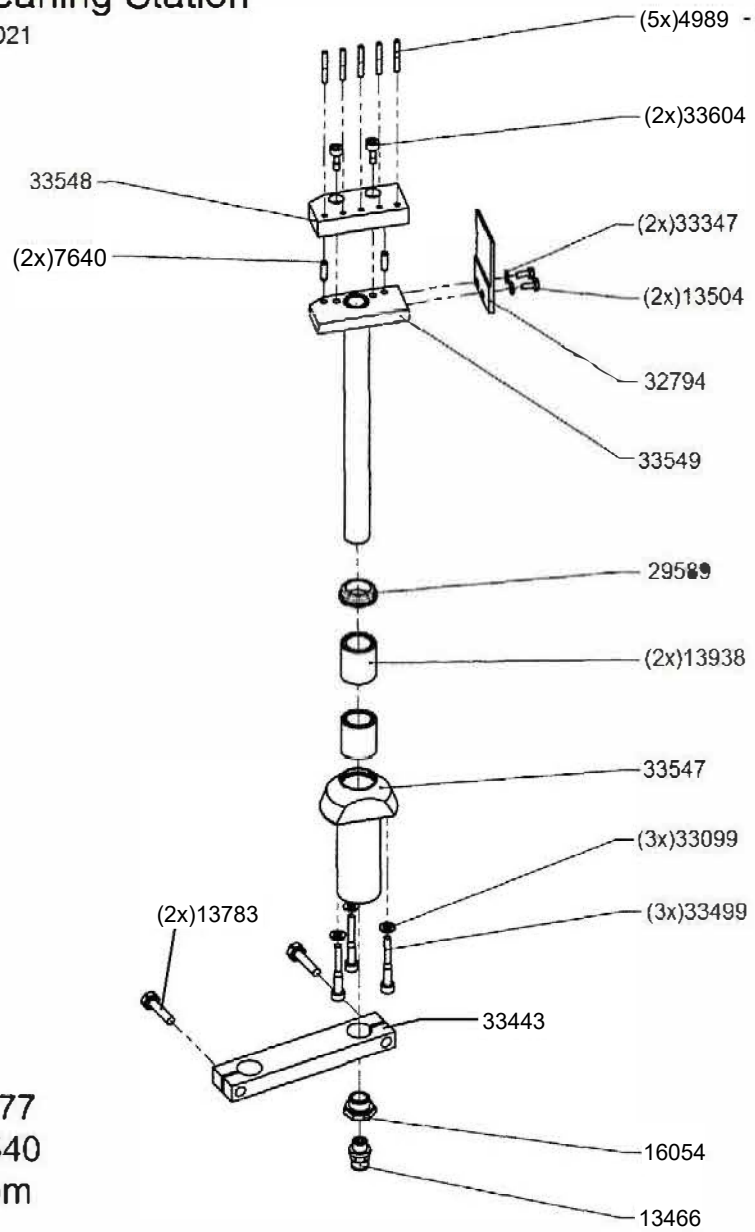

BOSCH 705 (5CT)						
Capsule Size:	000	00	0/1	1/2	2/3	4/5
Nozzle, Standard	33826	33826	33826	33826	33826	33826
Nozzle, with Improved Air Blow **-Recommended-**	**4989**	**4989**	**4989**	**4989**	**4989**	**4989**
Standard Nozzle with Air Blow to accecpt Brush	33827	33827	33827	33827	33827	33827
Nozzle, Improved Air Blow to accept Brush **-Recommended-**	**33828**	**33828**	**33828**	**33828**	**33828**	**33828**
Brush, Standard **-Recommended-**	**33779**	**33770**	**33771**	**33772**	**32248**	**33773**
Brush, Stiffer	33759	33778	33777	33776	33775	33774

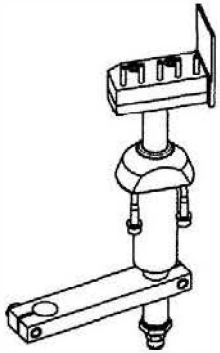

IIM
tel (336) 584-4777
fax (336) 584-9540
sales@iimnc.com
www.iimnc.com

Section 16: Ejection Station

GKF705 - revised 7/2/2021

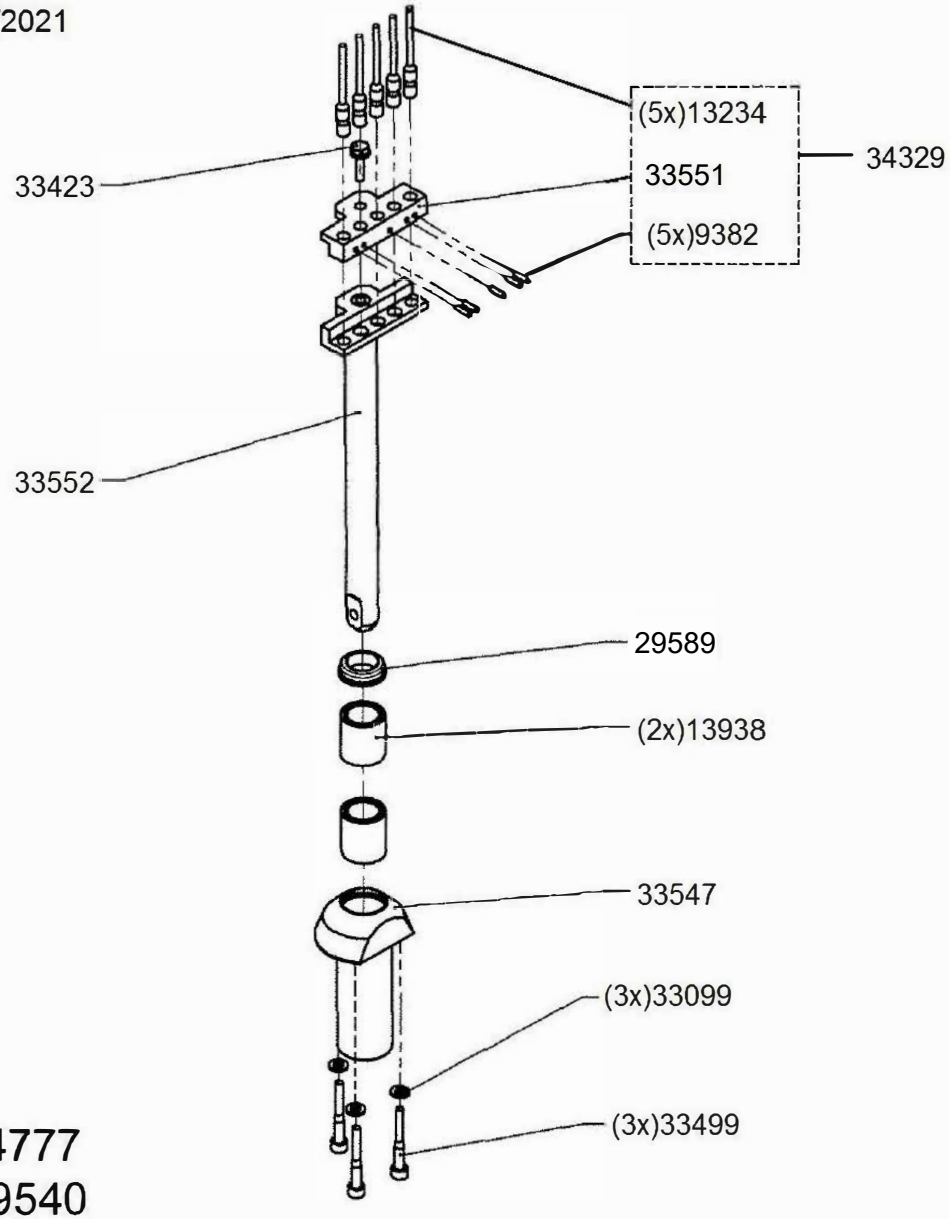

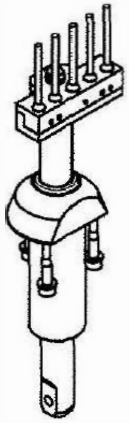

IIM
tel (336) 584-4777
fax (336) 584-9540
sales@iimnc.com
www.iimnc.com

Section 17: Capsule Separation

GKF705 - revised 7/2/2021

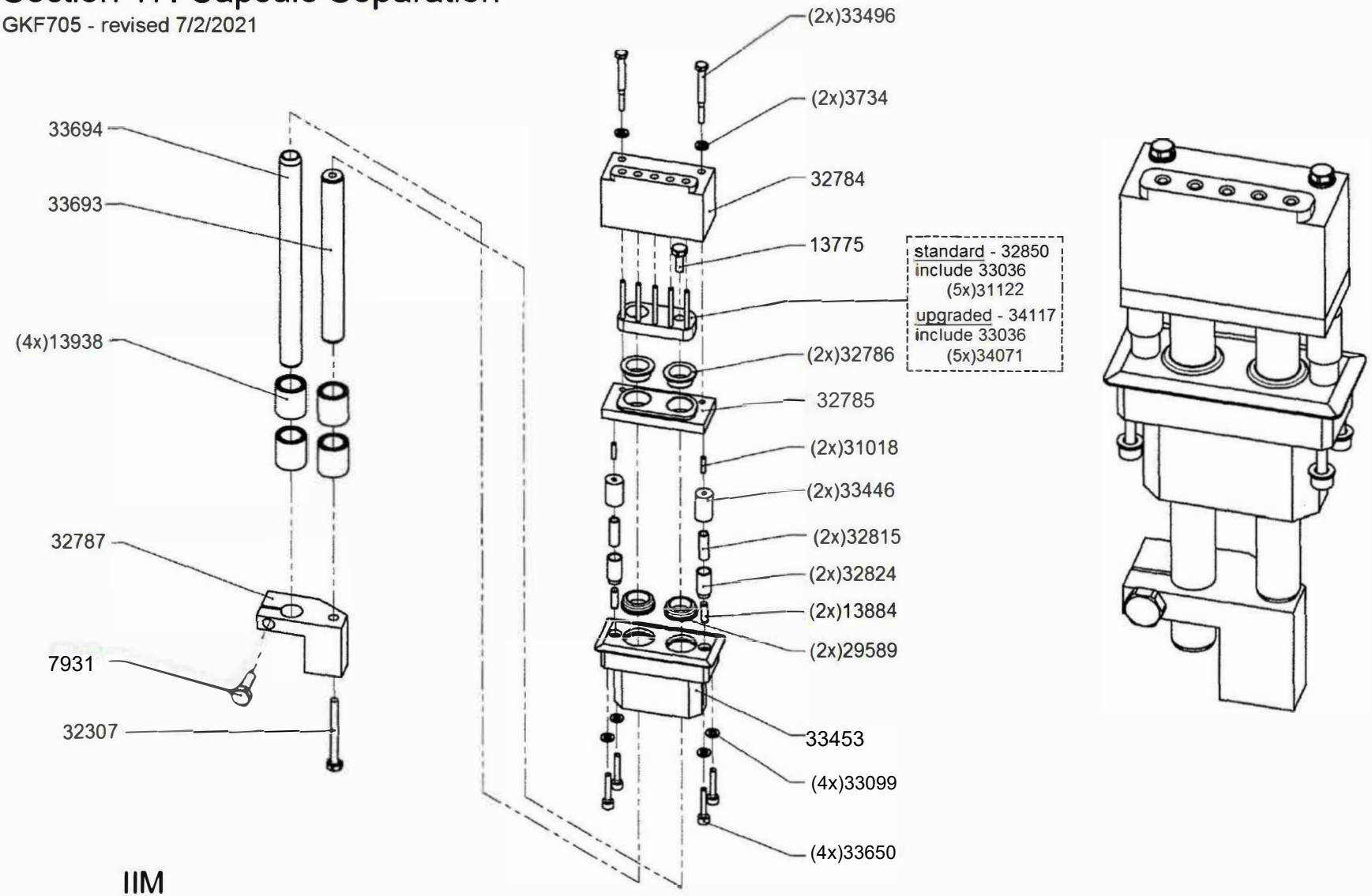

IIM
tel (336) 584-4777
fax (336) 584-9540
sales@iimnc.com
www.iimnc.com

Section 18: Capsule Ejection Housing

GKF705 - revised 1/21/22

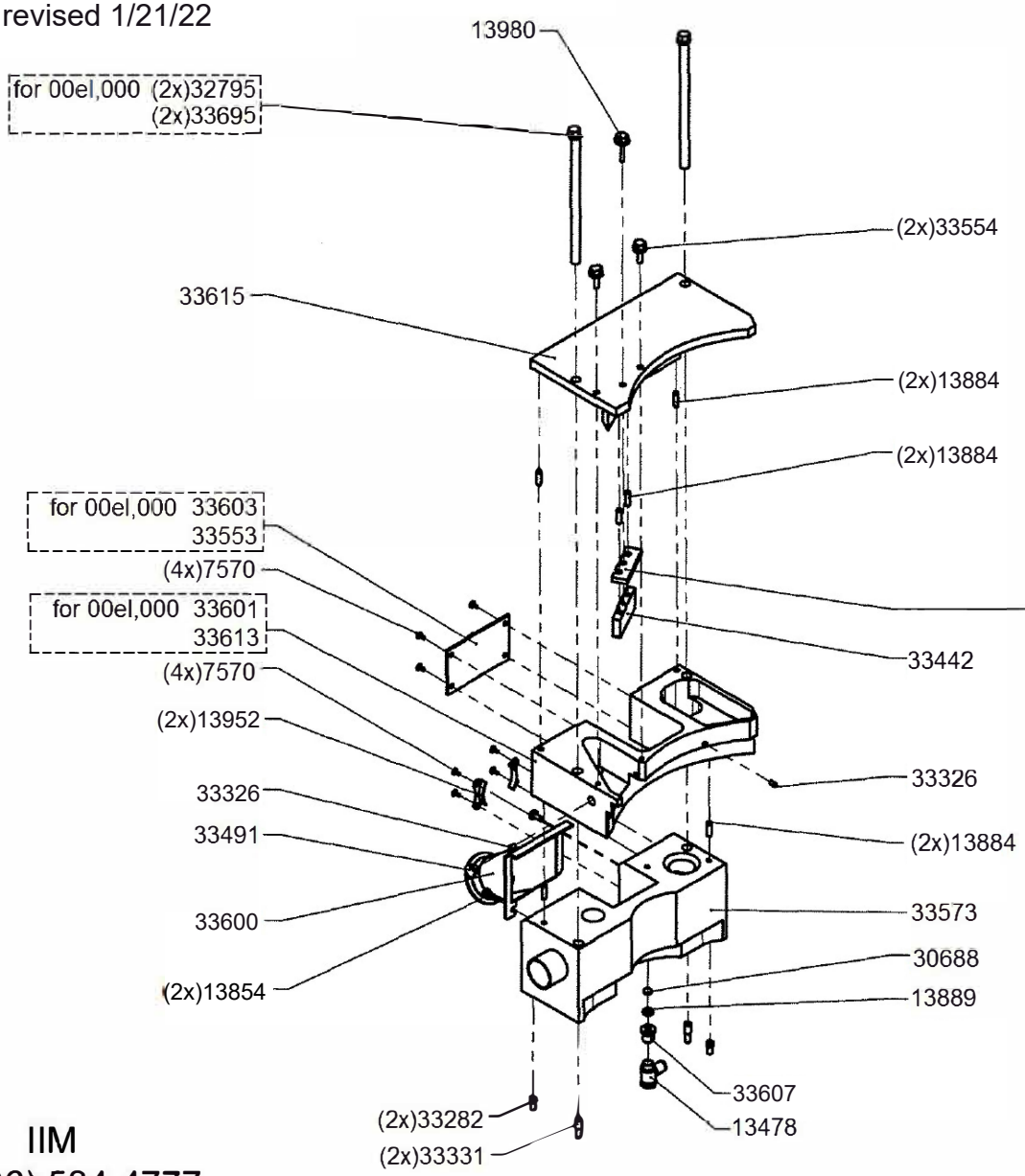

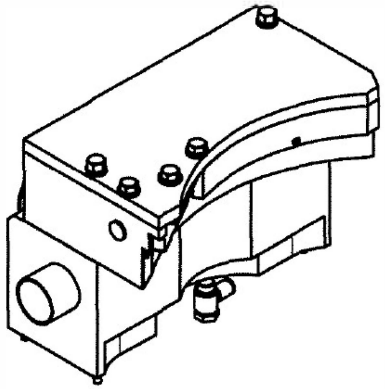

Upper Closing Spacer	
IIM #	Capsule Size
34585	000
32721	00E
N/A	00
N/A	0E
27149	0
34586	1E
27411	1
34587	2E
27131	2
30626	3
27051	4

Lower Closing Spacer	
IIM #	Capsule Size
N/A	000
32720	00E
32720	00
34588	0E
32723	0
32724	1E
32724	1
32725	2E
32725	2
32726	3
32727	4

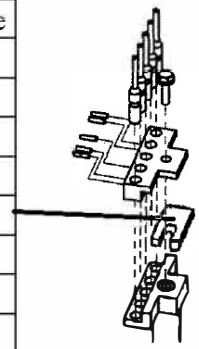

IIM
tel (336) 584-4777
fax (336) 584-9540
sales@iimnc.com
www.iimnc.com

Section 19: Separation Vacuum System - New Version

GKF705 - revised 7/2/2021

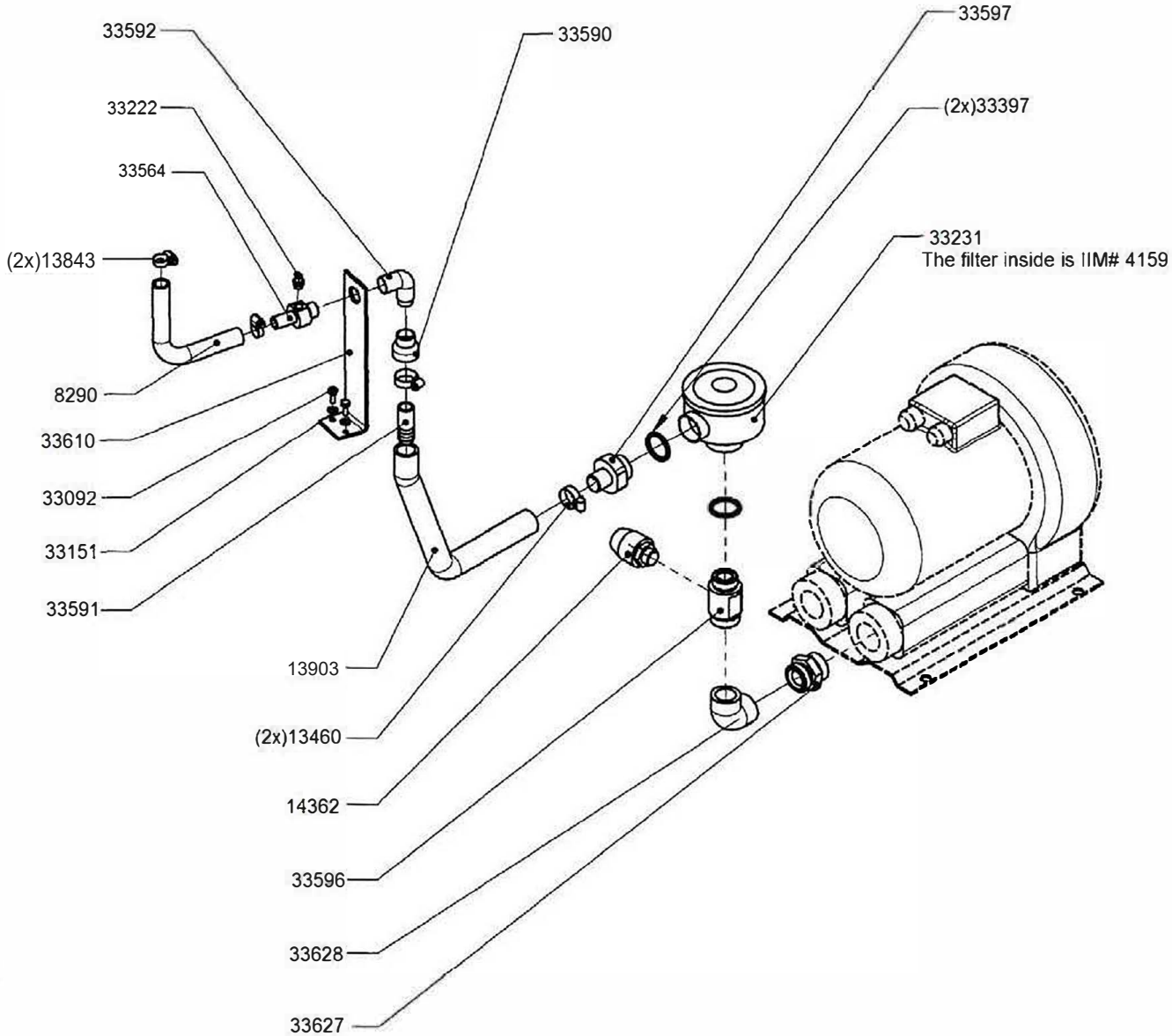

IIM
tel (336) 584-4777
fax (336) 584-9540
sales@iimnc.com
www.iimnc.com

Section 20: Separation Vacuum System - Old Version

GKF705 - Revised 12/13/2021

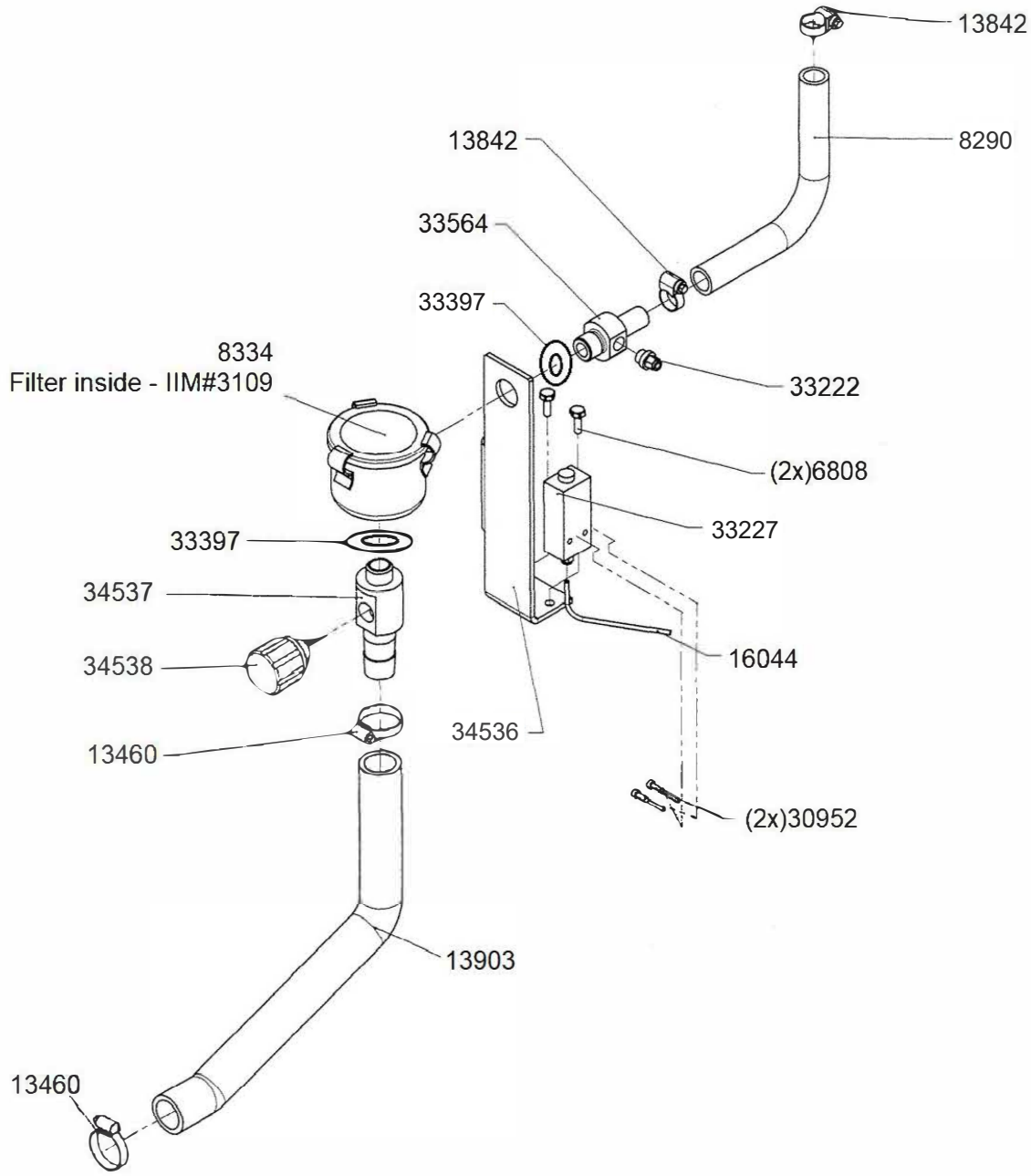

IIM
tel (336) 584-4777
fax (336) 584-9540
sales@iimnc.com
www.iimnc.com

Section 21: Vacuum Clean System

GKF705 - revised 7/2/2021

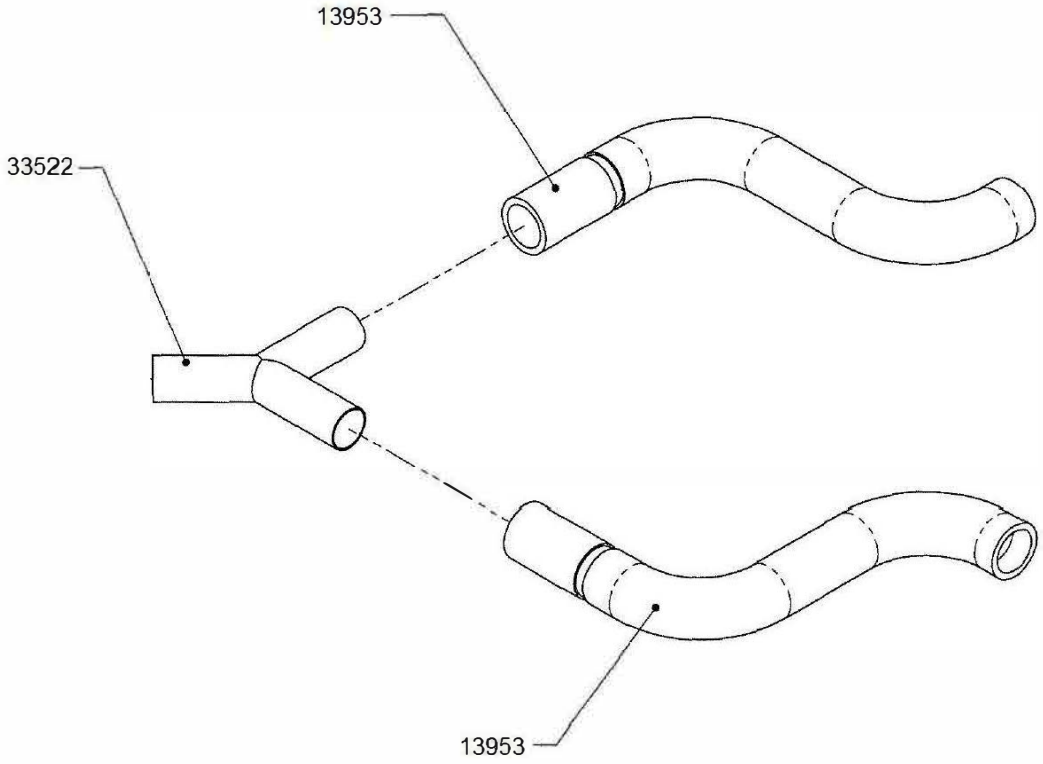

IIM
tel (336) 584-4777
fax (336) 584-9540
sales@iimnc.com
www.iimnc.com

Section 22: Compressed Air System

GKF705 - revised 7/2/2021

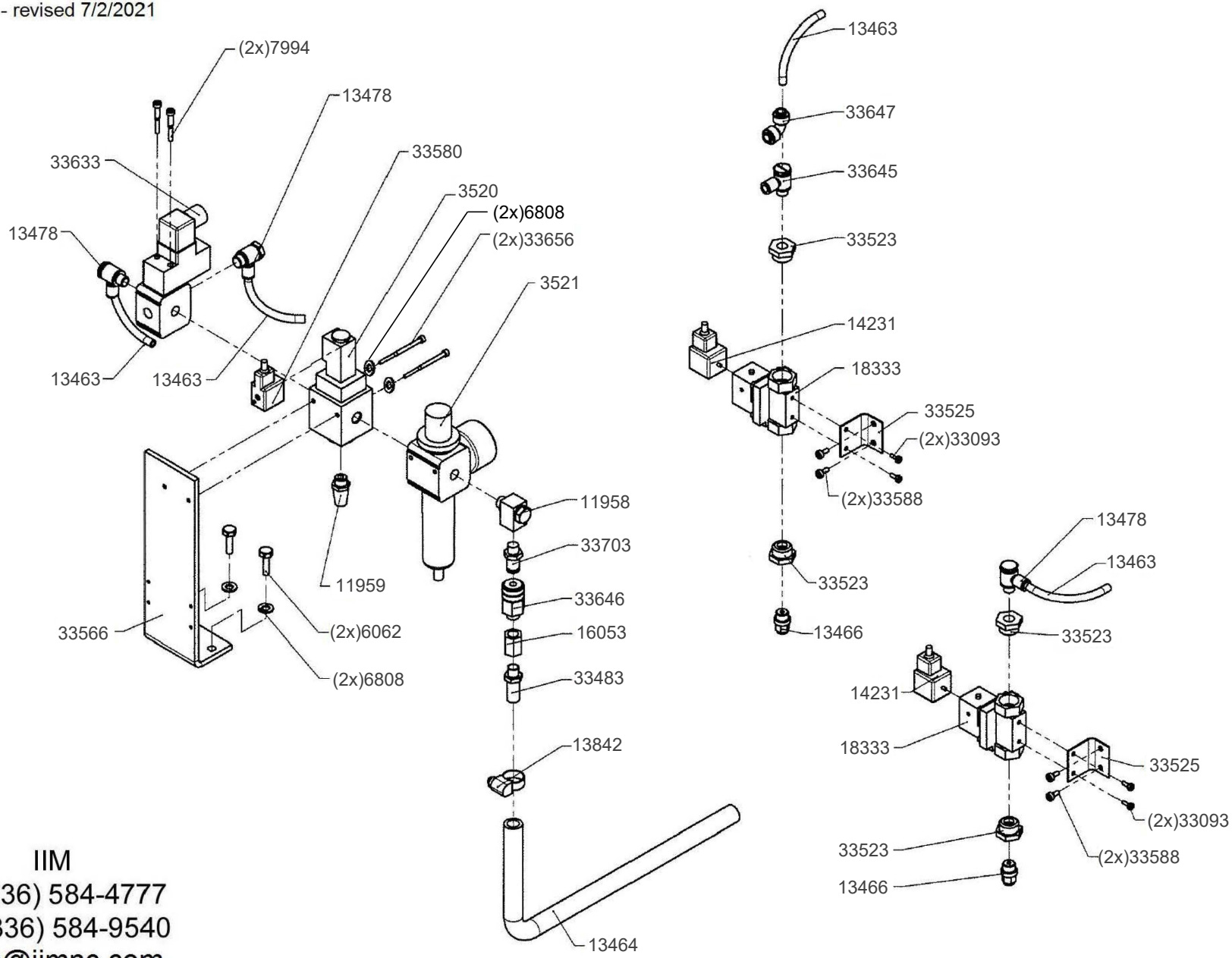

IIM
tel (336) 584-4777
fax (336) 584-9540
sales@iimnc.com
www.iimnc.com

Section 23: Size Change Parts 5CT

GKF705 - revised 7/2/2021

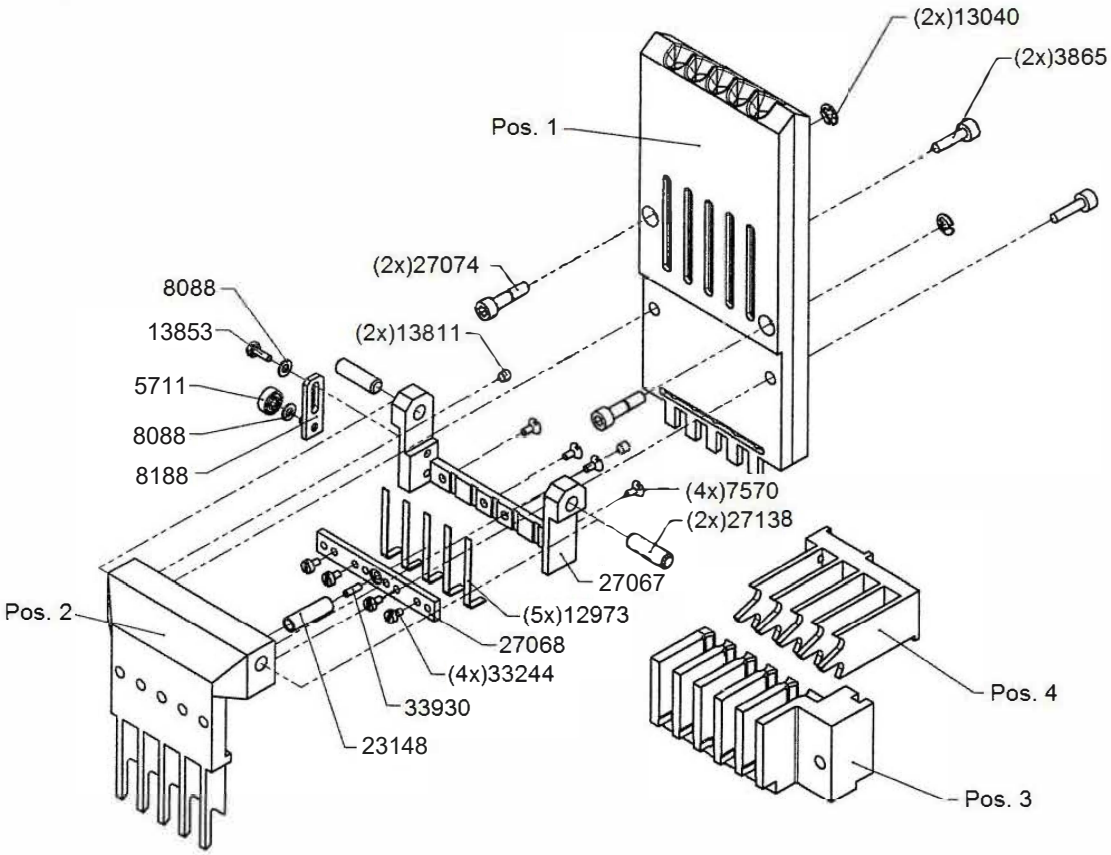

IIM
tel (336) 584-4777
fax (336) 584-9540
sales@iimnc.com
www.iimnc.com

		Capsule Size						
	Description	000	00 + 00E	0 + 0E	1 + 1E	2 + 2E	3	4 + 4E
Pos. 1	Magazine COMPLETE	33909	33910	33911	33912	33913	33914	33915
Pos. 2	Vertical Fingers	33916	33917	33918	33919	33920	33921	33922
Pos. 3	Sorting Block	33923	33924	33925	33926	33927	33928	33929
Pos. 4	Orientation Fingers	33896	33897	33898	33899	33900	33901	33902

Section 24: Size Change Parts 5CT

GKF705 - revised 7/2/2021

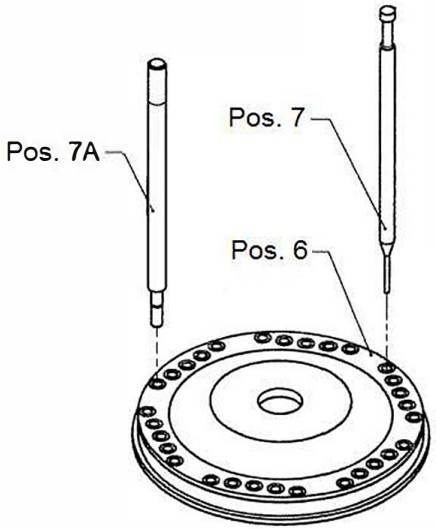

Note: Fast Track Dosing Disc Manufacturing Available.
Please contact us for speedy delivery service.

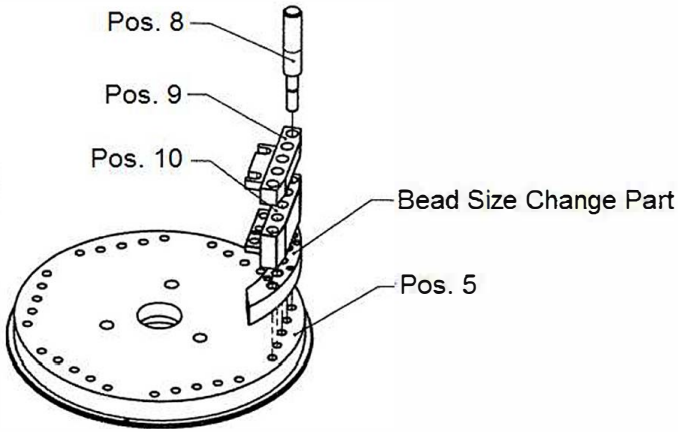

Dosing Disc Bolts
13981 - M8x26
13819 - M8x36

Dosing Disc Storage Box
Fixed: IIM# 32165
Adjustable: IIM# 31281

		Capsule Size						
	Description	000	00 + 00E	0 + 0E	1 + 1E	2	3	4
Pos. 5	Fixed Dosing Disc **	28641	28620	26681	27688	25400	34280	33725
Pos. 6	Adjustable Dosing Disc	CONTACT US FOR MORE DETAILS						
Pos. 7	Tamping Pin - Fixed DD	13165	3879	3839	3840	3878	5150	5126
	Tamping Pin - Adj DD	CONTACT US	3839	3840	5150	5126	11312	5126
Pos. 7A	Dosing Disc Alignment Pin	7289	3539	7291	4925	5188	5189	7293
Pos. 8	Segment Alignment Pin	13360	4923	8185	4924	5190	5191	13361
Pos. 9	Upper Sgment Block	28558	25551	25555	25557	25559	25561	25563
Pos. 10	Lower Segment Block	28559	25553	25554	25556	25558	25560	25562

** MUST SPECIFY DOSING DISC THICKNESS

IIM
tel (336) 584-4777
fax (336) 584-9540
sales@iimnc.com
www.iimnc.com

IIM #	Description	Section
934	BEARING	9
934	BEARING	14
2676	SCREW,HEX M6	7
2676	SCREW,HEX M6	10
2693	CAM FOLLOWER	10
3109	FILTER	20
3387	BEARING	2
3387	BEARING	2
3387	BEARING	4
3387	BEARING	5
3441	CAM FOLLOWER	1
3441	CAM FOLLOWER	3
3441	CAM FOLLOWER	4
3441	CAM FOLLOWER	5
3520	VALVE	22
3521	ACCUATOR	22
3734	WASHER M6	8
3734	WASHER M6	11
3734	WASHER M6	13
3734	WASHER M6	17
3865	SCREW,SHC	23
3998	SPRING CAP	12.1
4159	FILTER	19
4896	NUT M8	1
4896	NUT M8	3
4896	NUT M8	4
4896	NUT M8	5
4986	SCREW,HEX M6	2
4986	SCREW,HEX M6	9
4986	SCREW,HEX M6	14
4989	BLOWOUT NOZZLE SZ3/4	15
5034	BEARING	1
5034	BEARING	3
5034	BEARING	4
5034	BEARING	5
5034	BEARING	10
5386	SEAL	13
5644	O-RING	10
5711	BEARING	23
6062	SCREW,HEX M8	22
6584	BEARING	7
6808	WASHER M8	9
6808	WASHER M8	10
6808	WASHER M8	13

IIM #	Description	Section
6808	WASHER	20
6808	WASHER M8	22
6843	WASHER M5	8
7490	SPRING CLIP	1
7490	SPRING CLIP	3
7492	SPRING CLIP	5
7494	ROD FASTENER	1
7494	ROD FASTENER	3
7495	ROD FASTENER	1
7495	ROD FASTENER	3
7495	ROD FASTENER	5
7521	SCREW,HEX	9
7570	SCREW M4	10
7570	SCREW M4	18
7570	SCREW M4	23
7640	DOWEL PIN	15
7927	SCREW,HEX	20
7931	SCREW,HEX M10	8
7931	SCREW,HEX M10	9
7931	SCREW,HEX M10	14
7931	SCREW,HEX M10	17
7939	SCREW,HEX M8	13
7959	NUT M10	10
7994	SCREW,SHC	22
8022	SCREW SHC M6	1
8022	SCREW SHC M6	3
8022	SCREW SHC M6	5
8028	SCREW M8	8
8088	WASHER M4	5
8088	WASHER,M4	22
8088	WASHER M4	23
8090	WASHER M12	2
8090	WASHER M12	4
8090	WASHER M12	8
8188	MAG ADJ ARM	23
8191	ROD FASTENER	5
8290	VACUUM HOSE	19
8290	PIPE	20
8334	FILTER HOUSING	20
9266	DOWEL PIN	8
9382	DOWEL PIN	14
9382	DOWEL PIN	16
9461	SCREW, SHC M5	2
9461	SCREW, SHC M5	7

IIM #	Description	Section
9461	SCREW, SHC M5	10
9945	ROD END FEMALE	1
9945	ROD END FEMALE	3
9945	ROD END FEMALE	4
9945	ROD END FEMALE	5
9946	ROD END MALE	1
9946	ROD END MALE	3
9946	ROD END MALE	4
9946	ROD END MALE	5
11958	BRANCH	22
11959	SILENCER	22
12959	FAULTY CAP SPACER 3MM	9
12960	FAULTY CAP SPACER 2MM	9
12973	SPRING FINGER	23
13040	CIRCLIP	23
13142	SCREW,HEX M4	5
13142	SCREW,HEX M4	12.1
13234	PIN	16
13367	SCRAPER COVER	3
13429	DOWEL PIN	9
13433	SPRING	12.1
13460	HOSE CLAMP	19
13460	HOSE CLAMP	20
13463	TUBING	22
13464	TUBING	22
13466	PNEUMATIC FITTING	15
13466	PNEUMATIC FITTING	22
13478	SWIVEL FITTING	18
13478	SWIVEL FITTING	22
13491	DOWEL PIN	2
13491	DOWEL PIN	5
13496	DOWEL PIN	11
13502	DOWEL PIN	8
13504	SCREW,HEX M5	15
13506	SHIM	9
13506	SHIM	14
13623	SEAL	11
13634	LEVELING CAP	10
13744	WASHER	7
13744	WASHER	9
13744	WASHER	14
13745	WASHER M8	2
13745	WASHER M8	8
13745	WASHER M8	11

IIM #	Description	Section
13757	SCREW,HEX M8	13
13757	SCREW	13.1
13758	SCREW	1
13758	SCREW	3
13758	SCREW	4
13758	SCREW	5
13763	SCREW,HEX	3
13765	SCREW,HEX M6	7
13765	SCREW,HEX M6	8
13765	SCREW,HEX M6	13
13767	NUT	2
13767	NUT	3
13769	NUT HEX M6	11
13769	NUT HEX M6	13
13770	NUT HEX M10	7
13770	NUT HEX M10	11
13770	NUT HEX M10	13
13770	NUT,HEX	13.1
13774	WASHER	2
13774	WASHER	5
13775	SCREW	17
13777	SHIM	8
13778	SCREW,HEX M6	11
13783	SCREW	15
13787	SEAL	11
13787	SEAL	13
13805	SCREW,SHC M8	9
13811	SET SCREW	23
13813	KNOB	8
13813	KNOB	10
13816	NUT M12	1
13816	NUT M12	3
13816	NUT M12	4
13816	NUT M12	5
13825	TIMING DIAL	5
13825	TIMING DIAL	6
13831	FITTING	8
13842	HOSE CLAMP	20
13842	HOSE CLAMP	22
13843	VACUUM VALVE	19
13853	SCREW,HEX M4	23
13854	SCREW,HEX M6	13
13854	SCREW	13.1
13854	SCREW,HEX M6	18

IIM #	Description	Section
13864	SCREW HEX	9
13864	SCREW HEX	14
13874	WASHER M6	12.2
13875	WASHER M8	10
13875	WASHER M8	11
13876	WASHER M10	2
13876	WASHER M10	4
13876	WASHER M10	5
13876	WASHER M10	7
13876	WASHER M10	10
13877	WASHER M12	1
13877	WASHER M12	2
13877	WASHER M12	3
13877	WASHER M12	4
13877	WASHER M12	5
13884	DOWEL PIN	7
13884	DOWEL PIN	17
13884	DOWEL PIN	18
13887	GASKET	8
13887	GASKET	13
13889	O-RING	18
13899	DOWEL PIN	8
13899	DOWEL PIN	13
13899	PIN	13.1
13903	TUBING	19
13903	PIPE	20
13911	CLAMP	8
13911	CLAMP	13
13930	SCREW	13
13931	HAND KNOB	8
13931	HAND KNOB	13
13937	BEARING	7
13937	BEARING	8
13938	BEARING	8
13938	BEARING	9
13938	BEARING	15
13938	BEARING	16
13938	BEARING	17
13952	SPLIT RING	10
13952	SPLIT RING	18
13953	VACUUM TUBING	21
13973	RETAINING FINGER	8
13974	SCREW M8	11
13980	SCREW M6	18

IIM #	Description	Section
14231	CABLE 5M	22
14232	CABLE 5M	12.2
14274	CLAMPING BRACKET	9
14274	CLAMPING BRACKET	14
14298	RETAINING RING	10
14349	SCREW HEX M6	12.2
14362	VACUUM VALVE	19
14411	WASHER	1
14411	WASHER	3
14411	WASHER	4
14411	WASHER	5
14416	NUT	7
14469	SCREW M6	2
14477	KEY	2
14477	KEY	3
14477	KEY	5
14593	SCREW M10	2
14593	SCREW M10	4
14593	SCREW M10	5
14593	SCREW M10	5
15004	POST	4
15290	SET SCREW M14	1
15290	SET SCREW M14	3
15290	SET SCREW M14	4
15290	SET SCREW M14	5
15390	NUT M8	11
15581	POST	4
16044	TUBING	20
16051	SCREW	13
16053	FITTING	22
16054	REDUCING NIPPLE	15
16064	PIN	12.1
16605	CAM FOLLOWER	10
16613	LEVER BRACKET	1
16613	LEVER BRACKET	3
16613	LEVER BRACKET	5
16614	SPROCKET	2
16614	SPROCKET	3
16614	SPROCKET	5
16614	SPROCKET	6
16619	LEVER ARM	5
16620	SORTING CAM	5
16620	SORTING CAM	6
16621	LEVER ARM	4

IIM #	Description	Section
16623	SEPARATION CAM	4
16623	SEPARATION CAM	6
16630	LEVER	1
16632	FAULTY CAPSULE CAM	6
16634	CLOSING ARM	1
16675	SPRING	11
18333	SOLENOID	22
23067	SHAFT COLLAR	1
23067	SHAFT COLLAR	3
23067	SHAFT COLLAR	5
23068	WASHER	1
23068	WASHER	3
23068	WASHER	4
23068	WASHER	5
23068	WASHER	10
23148	SPRING	23
24663	SPRING FASTENER	5
25100	POWDER SENSOR	12.2
26606	LOWER CLOS/EJCT BLOCK	14
26926	SCREW,HEX M12	5
26926	SCREW,HEX M12	6
26932	SCREW SHC M8	4
27060	FAULTY CAP EJECT ARM ASSY	9
27068	BRACKET	23
27074	SCREW	23
27138	MAGAZINE ARM PIN	23
27461	TAMP PIN ADJ BLOCK	12.1
27463	SCREW	12.1
27466	TAMP PIN HOLD PLATE	12.1
27467	POWDER STIRRER	11
27471	HEIGHT LEVEL GUAGE	12.2
27484	WASHER	10
27488	DOSING BOWL	10
27492	NEEDLE BEARING	10
27516	HOSE	9
27517	TAMP PIN TRANS HOLDER	12
27519	GUIDE RING COLUMN	11
27521	LEVEL SENSOR POST INSERT	11
27525	SEAL	10
27527	SENSOR SLEEVE	12.2
27528	HOLDING BRACKET	12.2
27534	EJECTION CAM	3
27534	EJECTION CAM	6
27537	SPROCKET	7

IIM #	Description	Section
27646	TAMPING BLOCK PLATE	12.1
27815	FLOW TRANSMITTER	11
28417	LINEAR BEARING	7
29381	SEAL	8
29589	SEAL	8
29589	SEAL	9
29589	SEAL	14
29589	SEAL	15
29589	SEAL	16
29589	SEAL	17
30292	TRANS BLOCK SPACER	12
30296	MAIN DRIVE CHAIN	2
30296	MAIN DRIVE CHAIN	3
30302	SCREW	13.1
30303	DOWEL PIN	8
30472	LINEAR BEARING	11
30567	SPROCKET	2
30567	SPROCKET	10
30688	FILTER DISC	18
30952	SCREW,SHC	20
31018	SET SCREW	10
31018	SET SCREW	17
31031	SCREW M16	2
31050	O-RING	8
31122	SEPARATION PIN	17
31360	DOWEL PIN	7
31386	SCREW M8	11
31386	SCREW M8	13
31410	SCREW M5	8
31539	SOLENOID VALVE	22
31873	SPRING	12.1
31986	CAPSULE TRANSPORT	10
32010	SCREW M8	10
32175	SPRING	12.1
32180	SPRING	12.1
32307	SCREW,HEX M8	17
32453	SCREW M10	11
32455	TAMPING RING	10
32520	ADJ SCREW ASSEMBLY	11
32688	DOWEL PIN	13
32721	SPACER	18
32722	UPPER CLOSING BLOCK	18
32784	SUCTION SHOE	17
32785	SEPARATION SHOE BASE	17

IIM #	Description	Section
32786	BUSHING	17
32787	CONNECTOR BLOCK	17
32788	SCREW	7
32789	SEAL	7
32790	SEAL	7
32791	LOWER SEGMENT CARRIER	7
32792	UPPER SEG CARRIER ASSY	7
32793	PLUNGER	8
32794	DEFLECTOR	15
32795	SCREW	18
32797	STAR KNOB	12.1
32812	SIGHT GLASS	13
32815	SPRING	17
32824	SPACER	17
32844	SPRING	5
32845	SPRING	4
32846	SPRING	1
32847	SPRING	1
32848	SPRING	3
32849	WIPER BLOCK SHOE	11
32850	SEPARATION PLATE ASSY	17
32864	SPACER	11
32968	SPRING	1
32969	SPRING CLIP	1
32969	SPRING CLIP	3
33036	SEPARATION PLATE	17
33070	SCREW	8
33076	WASHER	11
33092	SCREW	13
33092	SCREW	19
33093	SCREW HEX M4	22
33099	WASHER M6	9
33099	WASHER M6	13
33099	WASHER M6	14
33099	WASHER M6	15
33099	WASHER M6	16
33099	WASHER M6	17
33100	SCREW SHC	10
33128	KEY	3
33143	NUT	13
33151	WASHER M8	5
33151	WASHER M8	19
33166	SCREW,SHC M8	2
33166	SCREW,SHC M8	5

IIM #	Description	Section
33166	SCREW,SHC M8	7
33166	SCREW,SHC M8	10
33169	WASHER M16	3
33176	PIN	10
33183	SCREW	5
33185	WASHER	13
33186	STUD M8	13
33191	O-RING	13
33192	HOSE	13
33194	SCREW	13
33209	LINEAR BEARING HOUSING	9
33222	CONNECTOR	5
33222	CONNECTOR	19
33227	PRESSURE SENSOR	5
33227	ACCUATOR	20
33231	FILTER HOUSING	19
33234	AIR TUBE	5
33244	SCREW M4	23
33257	ANGLE BRACKET	9
33257	ANGLE BRACKET	14
33269	WASHER M6	1
33282	SCREW	18
33326	PIN	18
33331	SCREW	10
33331	SCREW	18
33347	WASHER M5	15
33368	GEARBOX	7
33397	O-RING	19
33397	GASKET	20
33423	SCREW M6	14
33423	SCREW M6	16
33441	GEAR MOTOR	13
33442	UPPER CLOSING BLOCK	18
33443	CROSS MEMBER	15
33444	UPPER WIPER BLOCK	11
33445	WIPER BLOCK SHOE	11
33446	SRING CAPTURE	17
33453	BLOCK	17
33454	SCREW M6	8
33455	SCREW M8	10
33456	WASHER	7
33457	SCREW M6	8
33458	SCREW M8	7
33459	SCREW M8	10

IIM #	Description	Section
33460	TURNBUCKLE	3
33461	SCREW,HEX M6	2
33461	SCREW,HEX M6	5
33462	NUT M20	10
33464	SCREW M4	7
33465	O-RING	10
33466	NUT M12	4
33467	SCREW,SHC M8	10
33467	SCREW,SHC M8	13
33468	WASHER M8	4
33468	WASHER M8	8
33469	AUGER MOTOR HUB KEY	13
33471	NUT M18	10
33472	SCREW,HEX M8	11
33473	SCREW,HEX M10	8
33474	SCREW M6	7
33475	SCREW,SHC M5	8
33476	SCREW,SHC M6	7
33478	SET SCREW	2
33478	SET SCREW	3
33478	SET SCREW	5
33479	DOWEL PIN	2
33480	WASHER M10	10
33481	WASHER M18	10
33482	IDLER SPROCKET	2
33482	IDLER SPROCKET	3
33483	CONNECTOR	22
33484	SET SCREW	2
33485	SCREW,HEX M6	7
33486	SCREW M6	8
33487	SHIM	11
33488	WASHER	2
33488	WASHER	4
33488	WASHER	5
33488	WASHER	7
33488	WASHER	10
33489	SCREW,SHC M8	8
33489	SCREW M8	8
33490	SCREW,SHC M5	5
33491	SCREW	18
33492	SCREW	8
33493	RETAINING RING	4
33493	RETAINING RING	5
33493	RETAINING RING	6

IIM #	Description	Section
33494	SCREW	4
33495	SCREW,SHC	7
33496	SCREW,HEX M6	17
33498	SCREW M10	7
33498	SCREW M10	10
33499	SCREW, SHC	9
33499	SCREW, SHC	14
33499	SCREW, SHC	15
33499	SCREW, SHC	16
33500	RETAINING RING	11
33501	SCREW,SHC M10	7
33502	SCREW	7
33502	SCREW	10
33503	PIN	8
33504	SCREW M6	7
33505	SCREW,SHC M4	11
33506	SCREW,SHC	10
33507	SCREW	2
33508	CAP	10
33509	BEARING	8
33510	WASHER M16	2
33511	KEY	10
33512	BEARING	7
33513	SET SCREW M4	12.1
33514	NUT	8
33515	SCREW	10
33517	TAMP HOUSING BLOCK	11
33518	BRACKET	11
33519	TAMP SHAFT PLATE	11
33522	VACUUM Y TUBE	21
33523	HEX ADPATER	22
33524	MOTOR HUB	13
33525	ANGLE BRACKET	22
33526	SCREW	11
33527	SCREW M8	8
33528	SHAFT	8
33529	POWDER CUP	13
33530	AUGER SHAFT	13
33531	GUIDE RING	11
33532	SENSOR CAP	12.2
33533	STUD	10
33534	BRACKET	10
33535	BRACKET	13
33536	DRIVE SHAFT	13

IIM #	Description	Section
33537	TURRET SEAL	7
33538	BEARING	10
33539	GASKET	7
33540	TURRET COVER	7
33541	BLOCK	10
33542	POWDER TUBE	10
33543	SPLIT COLLAR	10
33544	LEVEL SENSOR PLATE	11
33545	CAPSULE DISPENCER COVER	8
33546	SCREW,HEX M6	11
33546	SCREW	13.1
33547	BEARING HOUSING	14
33547	BEARING HOUSING	15
33547	BEARING HOUSING	16
33548	BLOWOUT BLOCK BASE	15
33549	SHAFT	15
33550	BRACKET	5
33551	LOWER CLOSING BLOCK	16
33552	EJECTION SHAFT	16
33553	COVER PLATE	18
33554	SCREW,HEX M6	9
33554	SCREW,HEX M6	18
33555	HOPPER COVER	8
33556	AUGER DRIVE PLATE	13
33557	REJECT TUBE	9
33558	PLUG INSERT	10
33559	CAPSULE HOPPER NEW	8
33559	LINEAR BEARING	10
33560	SUPPORT STANCHION	9
33561	ANGLE BRACKET	8
33562	MOUNTING BRACKETS	4
33562	MOUNTING BRACKETS	6
33563	SHAFT HUB	2
33563	SHAFT HUB	6
33564	ADAPTER	19
33564	REGULATOR	20
33565	MAGAZINE HOUSING	8
33566	VALVE SUPPORT BRACKET	22
33567	SEG TURRET SPACER	7
33568	HOUSING COVER	13
33569	SCREW	10
33570	SEPARATION SHAFT PIVOT	4
33571	SCREW,HEX M6	10
33572	SCREW	10

IIM #	Description	Section
33573	EJECTION HOUSING	18
33574	CLOSING CAM	1
33574	CLOSING CAM	6
33575	SHAFT PIVOT	1
33576	TURNBUCKLE	1
33577	WASHER	1
33578	SCREW	11
33579	LINEAR BEARING	8
33580	ADAPTER	22
33581	STRAIN RELIEF INSERT	12.2
33581	STRAIN RELIEF INSERT	13
33582	INSERT	13
33583	SCREW	5
33584	SHIM	7
33585	PIN	8
33586	PIN	10
33588	SCREW	22
33589	KEY	2
33589	KEY	3
33590	REDUCER	19
33591	THREADED INSERT	19
33592	TUBE	19
33593	MAIN DRIVE MOTOR	2
33594	POWDER HOPPER	13
33596	T-CONNECTOR	19
33597	ADAPTER	19
33598	STANDOFF	10
33599	LINEAR BEARING	14
33600	DISCHARGE TUBE	18
33601	UPPER EJECTION HOUSING	18
33602	RING	11
33603	COVER PLATE	18
33604	SCREW	15
33605	CAPSULE INFEED TUBE	8
33606	TAMPING RING	10
33607	ADAPTER	18
33608	MOUNTING BRACKET	5
33608	MOUNTING BRACKET	6
33609	SUPPORT BLOCK	10
33610	ANGLE BRACKET	19
33611	DOWEL PIN	5
33612	POWDER AUGER CHOPPER	13
33613	EJECTION HOUSING UPPER	18
33614	DOSING BLOCK	10

IIM #	Description	Section
33615	EJECTION HOUSING COVER	18
33616	CAPSULE FUNNEL HOUSING	8
33617	CAPSULE HOPPER OLD	8
33618	CAPSULE FUNNEL COVER	8
33619	ENCODER	5
33620	BEARING HOUSE,TAMO SHAFT	11
33621	BRACKET	10
33622	SUPPORT BRACKET	2
33623	BRACKET	5
33624	THUMB KNOB	5
33625	BRACKET	5
33626	FLEX COUPLING	5
33627	ADAPTER	19
33628	ELBOW CONNECTOR	19
33629	ULTRASONIC SENSOR STUD	8
33630	POWDER STIRRER	13
33630	POWDER,STIRRER	13.1
33631	SCREW M10	10
33632	RING INSERT	8
33634	NUT M8	1
33634	NUT M8	3
33634	NUT M8	4
33634	NUT M8	5
33635	NUT M8	1
33635	NUT M8	3
33635	NUT M8	4
33635	NUT M8	5
33636	KEY	1
33636	KEY	3
33636	KEY	4
33636	KEY	5
33637	MAIN DRIVE SHAFT,NEW	1
33637	MAIN DRIVE SHAFT	6
33638	SCREW,HEX M8	2
33639	MOTOR PLATE	2
33640	WASHER	2
33640	WASHER	7
33640	WASHER	10
33641	BEARING	2
33642	BRACKET	2
33643	BEARING	2
33644	BRACKET	2
33644	BRACKET	6
33645	FITTING	22

IIM #	Description	Section
33646	SCREW	22
33647	ADAPTER	22
33648	KEY	7
33649	WASHER	5
33650	SCREW,SHC	17
33651	SCREW,M6	8
33652	SPRING PLUNGER	8
33653	TURNBUCKLE	4
33654	SCREW	10
33655	DOWEL PIN	7
33656	DOWEL PIN	22
33657	SCREW	13
33658	POWDER TUBE	11
33659	SEGMENT TURRET	7
33660	GENEVA PLATE	7
33661	SEGMENT TURRET COVER	7
33662	CLAMP	7
33663	BLOCK	7
33664	SEAL	7
33665	SCREW,HEX	7
33666	SEAL	7
33667	SCREW,HEX	7
33668	SCREW,HEX	7
33669	SCREW M6	8
33670	TRAVERSING SEGMENT CAM	7
33671	SHAFT	11
33672	FAULTY CAP EJECT SHAFT	9
33673	TAMPING SHAFT	11
33674	GUIDE SCREW	11
33675	GEARBOX	10
33676	SCREW	12
33676	SCREW	12.1
33677	SCREW,HEX M12	12
33678	BLOCK	11
33679	COLLAR	12.1
33680	BRACKET ANGLED	11
33681	BLOCK	8
33682	BLOCK	8
33683	BLOCK	8
33684	SHAFT	8
33685	SHAFT	8
33686	MAGAZINE MOUNT BRACKET	8
33687	UPPER SORTING BRACKET	8
33688	GUIDE RAIL	8

IIM #	Description	Section
33689	BRACKET	8
33690	HAND KNOB	8
33691	SEAL INSERT	8
33692	SEAL INSERT	8
33693	VERTICAL SHAFT	17
33694	VERTICAL SHAFT	17
33695	SCREW	18
33696	LOWER CLOSING SHAFT	14
33697	TAMPING CAM	3
33697	TAMPING CAM	6
33698	LEVER ARM	10
33699	BLOCK	3
33700	SCREW	4
33701	TURNBUCKLE	5
33702	SCREW	8
33703	ADAPTER	22
33704	HOPPER SLIDE PANEL	8
33705	HOPPER PANEL	8
33706	CABLE INSERT	8
33707	SPLIT COLLAR	10
33725	DOSING DISC	10
33930	SET SCREW	23
34071	SEPARATION PIN	17
34117	SEPARATION PLATE ASSY	17
34154	TIE ROD	1
34230	WIPER BLOCK SHOE	11
34329	EJECTION BLOCK ASSY	16
34438	POWDER AUGER	13
34455	AUGER,POWDER NEW	13.1
34457	COUPLING,AUGER	13.1
34468	COUPLING,AUGER DRIVE	13.1
34500	MAIN DRIVE SHAFT,OLD	1
34536	ANGLE BRACKET	20
34537	REGULATOR	20
34538	KNOB	20
34558	DOWEL PIN	11
34659	HAND KNOB	11
34665	AUGER,POWDER NEW	13.1
34686	HOPPER EXTENSION	13.1
34687	DISC,RESTRICTOR,SST	13.1
34688	DISC,RESTRICTOR,TEFLON	13.1
34736	SCREW,HEX M12	4
34736	SCREW,HEX M12	6

IIM #	Description	Section