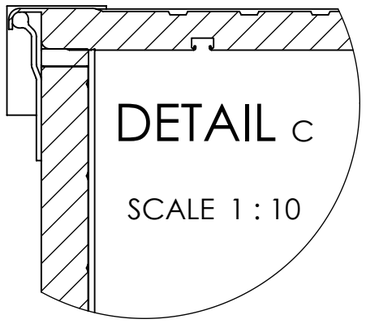

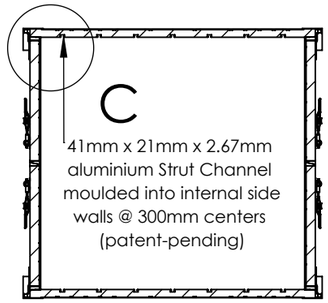

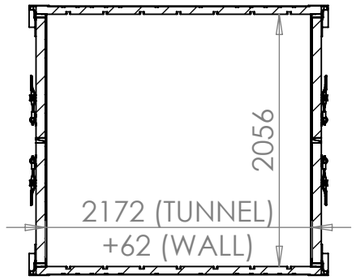

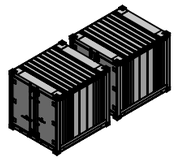

8ft (2,438 x 2,200 x 2,260)
mini container can
be transported inside
10ft (2,991 x 2,438 x 2,591)

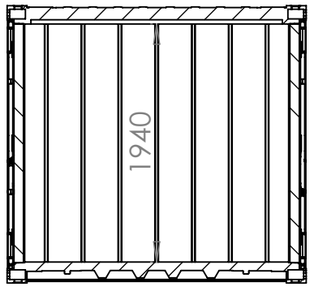

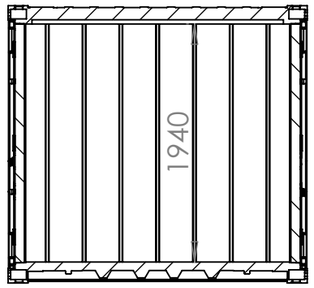

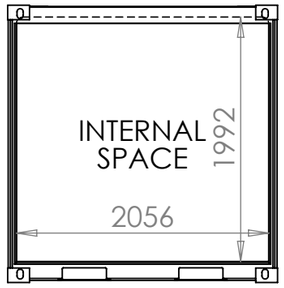

2/3/4 locking bar options

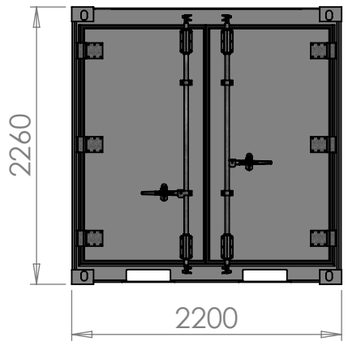

REAR FRONT

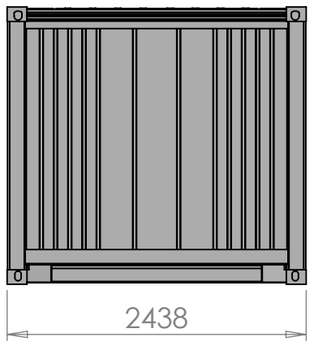

FRONT REAR

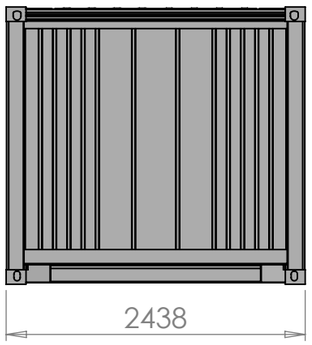

door/wall/reefer options

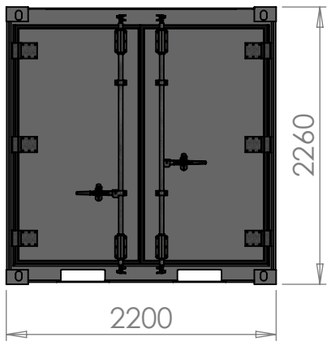

CONVERSION CONTAINERS®

INSULATION DESIGN: Polyurethane (PUR) foam with Cyclopentane (non-CFC) blowing agent: λ = 0.022 W/m.K

LOCATION	Thickness	U-Value	R-Value (SI)	R-Value (I-P)	R-Value (I-P)
	mm	W/m².K	K.m²/W	°F.ft².h/BTU	per inch
ROOF	80	0.275	3.636	20.655	6.558
WALL	58	0.379	2.636	14.975	6.558
FLOOR	113	0.196	5.114	29.045	6.558
DOOR	74	0.297	3.364	19.105	6.558

NOTE: Imperial expressed R-Values (e.g. USA) are a factor of 5.68 x Metric R-Values (e.g. Europe)

CLASSIFICATION		DIMENSION	
EXTERNAL	LENGTH	2,438 mm (+0/-6)	8 ft
	WIDTH	2,200 mm (+0/-5)	7ft 2in
	HEIGHT	2,260 mm (+0/-5)	7ft 4in
INTERNAL	LENGTH	2,172 mm (+0/-12)	
	WIDTH	2,056 mm (+0/-10)	
	HEIGHT	1,992 mm (+0/-10)	
DOOR OPENING	WIDTH	2,056 mm (+0/-10)	
	HEIGHT	1,944 mm (+0/-10)	
CARGO ACCESS HEIGHT		1,940 mm (+0/-10)	
INTERNAL CUBIC CAPACITY		8.9 m³	314 ft³
MAX. GROSS WEIGHT		7,000 kg	15,430 lbs
TARE WEIGHT (±2%)		1,300 kg	2,870 lbs
MAX. PAYLOAD		5,700 kg	12,560 lbs
STACKING TEST LOAD		97,200 kgf/post	214,290 lbf/post
FLOOR STRENGTH		7,260 kg	16,000 lbs
HEAT LEAKAGE (U20)		15.0 W/K	13.0 kcal/hr°C
AIR LEAKAGE (1" WGP)		2.0 m³/h	71 ft³/hr

PART NAME			MATERIAL	REMARK
FRAME	SIDE TOP RAIL		SPA-H	4.0 mm
	SIDE BOTTOM RAIL		SPA-H	4.0 mm
	END FRAME		SPA-H	3.0/4.0/6.0 mm
	FORK POCKET		SPA-H	4.0 mm
PANEL	ROOF		MGSS	0.8 & 1.0mm
	SIDE		MGSS	1.0 mm
	DOOR		MGSS	1.6 mm
	SUB-FLOOR	MAIN	SPA-H	1.6 mm
	INSIDE LINING	ROOF	AA5052-H16/H46	0.8 mm
		SIDE	AA6061-T6	2.67 mm
		DOOR	BN4 or eq. SS	0.7 mm
FLOOR (FLAT)			AA6061-T6	H30
CORNER FITTING			SCW480	H118 x W162 x L178
INSULATION			POLYURETHANE	0.022 W/m.k
DOOR HARDWARE			HOT DIP GALVANIZED STEEL	

DRAWN: Niall McDermott

DATE: 2024-09-29

UNLESS OTHERWISE SPECIFIED:
DIMENSIONS IN MILLIMETERS

TITLE

2 x 8ft mini Insulated Shipping Container with integrated Strut Channel framing

General Arrangement Drawing

DWG NO. SCP08886HT

REVISION: B

A3

SHEET SCALE:1:50

SHEET 1 OF 1