QUALITY AHEAD OF
EXCELLENCE

HAVE AN ATTITUDE AND
AN INGENUITY

MATRIX HEAVY EQUIPMENT SPARE PARTS
ADD: MUSAFFAH INDUSTRIAL AREA SECTOR M11,ABU DHABI,
UNITED ARAB EMIRATES
TEL : 00971-2-5535522
MOB: 00971-55-9305097
WWW.BULLERFORKLIFT.COM

WWW.BULLERFORKLIFT.COM

BULLER.

Customize Mast

Attachments

Cab

Optional Engine

Solid Tire

Toyota Seat

H Series CPC 2.5 Tons Performance Parameters

BULLER.

HIGH PERFORMANCE HYDRAULIC CYLINDER | POWERFUL ENGINE | LOW FUEL CONSUMPTION AND HIGH PERFORMANCE | WEAR-RESISTANT TYRE | ULTRA-HIGH SECURITY

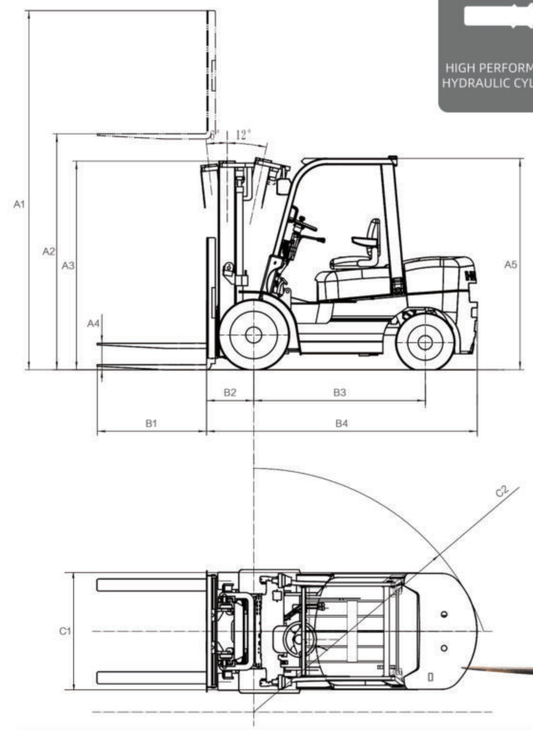

H Series CPC 2.5 Tons Performance Parameters

General	1	Model			CPC25/CPCD25	
	2	Rated Load Capacity		kg	2500	
	3	Load Center		mm	500	
Dimensions	4	Lifting Height (A2)		mm	3000	
	5	Free lifting Height (A4)		mm	120	
	6	Fork Size (B1)	LxWxT	mm	1070X122X40	
	7	Mast Tilting Angle	F/R		6/12	
	8	Length(without fork) (B4)		mm	2540	
	9	Overall Width (C1)		mm	1164	
	10	Mast Hight After Mast Fall (A3)		mm	2000	
	11	Lift Height (A1)		mm	4000	
	12	Overhead Guard Height (A5)		mm	2140	
	13	Turning Radius (C2)		mm	2240	
	14	Front Overhang (B2)		mm	455	
	15	Min.Right Angle Channel Width		mm	2280	
	16	Wheelbase (B3)		mm	1600	
	17	Track	Front	mm	970	
	18		Rear	mm	970	
	19	Ground Clearance	Mast	mm	115	
	20		Car Center	mm	170	
Performance	21	Speed	Travel Full Load	km/h	17	
	22		Travel No Load	km/h	19.5	
	23		Lifting Full Load	mm/s	530	
	24		Lifting No Load	mm/s	550	
	25		Lowering Full Load	mm/s	450	
	26		Lowering No Load	mm/s	550	
	27	Max.Drawbar Pull	Full/No Load	kg	1350/1000	
	28	Max.Gradeability	Full/No Load	%	17/18	18/19
Tire	29	Front Tire			7.00-12-12PR	
	30	Rear Tire			6.00-9-10PR	
Weight	31	Total Weight		kg	3680	
Pover&Transmission	32	Battery	Voltage/Capacity	V/AH	12/80	
	33	Engine	Model		Xinchai 4D27G31	Quanchai4C2-50V32 /4C2-50C43(京四)
	34		Rated Pover/Speed	Kw/rpm	36.8/2500	36.8/2500
	35		Max.Torque/Speed	N.m/rpm	157/1800	157/1800
	36	Work Pressure		Mpa	17.5	

- Adopt a new design style
- Bold rear legs of the overhead guard to ensure the safety of the driver
- The design accords with ergonomics, the driving is comfortable, the field of vision is wide, the operation is sensitive
- Hydraulic system of priority valve is configured to effectively improve the lifting speed
- Using integrally cast steering axle and drive axle to improve the reliability of the whole vehicle
- Using solid counterweight, the turning radius is greatly reduced

2.5t 2 Stage Mast

Mast Height	Carrying Capacity (Load center is 500mm)(kg)	Mast Height After Mast Fall	Free Lifting Height (mm)	Full Mast Height (mm)	Mast Tilting Angle (F/R)	Total Weight (kg)
2000	2500	1500	120	3100	6-12°	3595
2500	2500	1350	120	3600	6-12°	3640
3000	2500	2000	120	4100	6-12°	3680
3300	2500	2150	120	4400	6-12°	3705
3500	2500	2250	120	4600	6-12°	3725
3700	2500	2350	120	4800	6-12°	3745
4000	2500	2550	120	5100	6-6°	3810
4250	2100*2500	2675	120	5350	6-6°	3830
4500	1800*2400	2800	120	5600	6-6°	3850
5000	1300*2200	3050	120	6100	3-6°	3895
5500	*1700	3350	120	6600	3-6°	4085
6000	*1400	3600	120	7100	3-6°	4130

Note:(1)*indicates the rated load capacity of double tires on the front wheel
(2) The self-Weight in the table is the weight of double tires:+110kg

BULLER.

Customize Mast

Attachments

Cab

Optional Engine

Solid Tire

Toyota Seat

H Series CPC 3.0 Tons Performance Parameters

BULLER.

HIGH PERFORMANCE HYDRAULIC CYLINDER

POWERFUL ENGINE

LOW FUEL CONSUMPTION AND HIGH PERFORMANCE

WEAR-RESISTANT TYRE

ULTRA-HIGH SECURITY

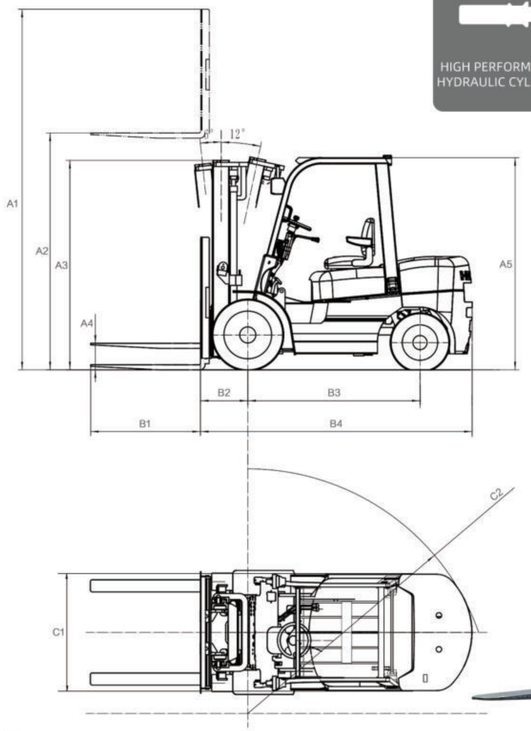

H Series CPC 3.0 Tons Performance Parameters

General	1	Model			CPC30/CPCD30	
	2	Rated Load Capacity		kg	3000	
	3	Load Center		mm	500	
Dimensions	4	Lifting Height (A2)		mm	3000	
	5	Free lifting Height (A4)		mm	135	
	6	Fork Size (B1)	LxWxT	mm	1220X122X45	
	7	Mast Tilting Angle	F/R		6/12	
	8	Length(without fork) (B4)		mm	2750	
	9	Overall Width (C1)		mm	1225	
	10	Mast Hight After Mast Fall (A3)		mm	2070	
	11	Lift Height (A1)		mm	4100	
	12	Overhead Guard Height (A5)		mm	2150	
	13	Turning Radius (C2)		mm	2515	
	14	Front Overhang (B2)		mm	480	
	15	Min.Right Angle Channel Width		mm	2545	
	16	Wheelbase (B3)		mm	1760	
	17	Track	Front	mm	1000	
	18		Rear	mm	970	
	19	Ground Clearance	Mast	mm	130	
	20		Car Center	mm	200	
Performance	21	Speed	Travel Full Load	km/h	18	
	22		Travel No Load	km/h	19.5	
	23		Lifting Full Load	mm/s	450	
	24		Lifting No Load	mm/s	500	
	25		Lowering Full Load	mm/s	450	
	26		Lowering No Load	mm/s	500	
	27	Max.Drawbar Pull	Full/No Load	kg	1696/1190	
	28	Max.Gradeability	Full/No Load	%	15/18	
Tire	29	Front Tire			28×9-15	
	30	Rear Tire			650-10	
Weight	31	Total Weight		kg	4230	
Pover&Transmission	32	Battery	Voltage/Capacity	V/AH	12/80	
	33	Engine	Model		Xinchai 4D27G31	Quanchai4C2-50V32 /4C2-50C43(京四)
	34		Rated Pover/Speed	Kw/rpm	36.8/2500	36.8/2500
	35		Max.Torque/Speed	N.m/rpm	157/1800	157/1800
	36	Work Pressure		Mpa	17.5	

- Adopt a new design style
- Bold rear legs of the overhead guard to ensure the safety of the driver
- The design accords with ergonomics, the driving is comfortable, the field of vision is wide, the operation is sensitive
- Hydraulic system of priority valve is configured to effectively improve the lifting speed
- Using integrally cast steering axle and drive axle to improve the reliability of the whole vehicle
- Using solid counterweight, the turning radius is greatly reduced

3.0t 2 Stage Mast

Mast Height	Carrying Capacity (Load center is 500mm)(kg)	Mast Height After Mast Fall	Free Lifting Height (mm)	Full Mast Height (mm)	Mast Tilting Angle (F/R)	Total Weight (kg)
2000	3000	1570	135	3100	6-12°	4145
2500	3000	1820	135	3600	6-12°	4180
3000	3000	2070	135	4100	6-12°	4230
3300	3000	2220	135	4400	6-12°	4255
3500	3000	2320	135	4600	6-12°	4280
3700	3000	2420	135	4800	6-12°	4300
4000	3000	2620	135	5100	6-6°	4365
4250	2850*3000	2745	135	5350	6-6°	4390
4500	2600*3000	2870	135	5600	6-6°	4415
5000	2100*2850	3120	135	6100	3-6°	4460
5500	*2400	3420	135	6600	3-6°	4510
6000	*2000	3670	135	7100	3-6°	4555

Note:(1)*indicates the rated load capacity of double tires on the front wheel
(2) The self-Weight in the table is the weight of double tires:+110kg

BULLER.

Customize Mast

Attachments

Cab

Optional Engine

Solid Tire

Toyota Seat

H Series CPC 3.5 Tons Performance Parameters

BULLER.

HIGH PERFORMANCE HYDRAULIC CYLINDER

POWERFUL ENGINE

LOW FUEL CONSUMPTION AND HIGH PERFORMANCE

WEAR-RESISTANT TYRE

ULTRA-HIGH SECURITY

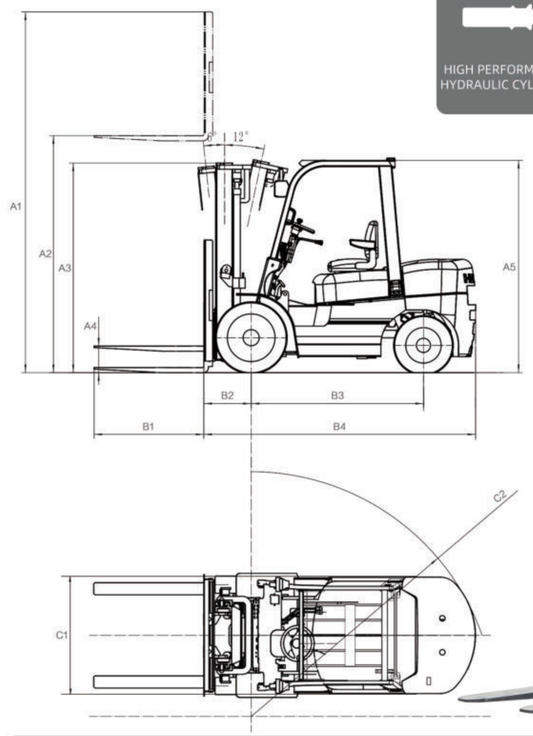

H Series CPC 3.5 Tons Performance Parameters

- Adopt a new design style
- Bold rear legs of the overhead guard to ensure the safety of the driver
- The design accords with ergonomics, the driving is comfortable, the field of vision is wide, the operation is sensitive
- Hydraulic system of priority valve is configured to effectively improve the lifting speed
- Using integrally cast steering axle and drive axle to improve the reliability of the whole vehicle
- Using solid counterweight, the turning radius is greatly reduced

H Series CPC 3.5 Tons Performance Parameters

General	1	Model			CPC35/CPCD35	
	2	Rated Load Capacity		kg	3500	
	3	Load Center		mm	500	
Dimensions	4	Lifting Height (A2)		mm	3000	
	5	Free lifting Height (A4)		mm	135	
	6	Fork Size (B1)	LxWxT	mm	1220X125X50	
	7	Mast Tilting Angle	F/R		6/12	
	8	Length(without fork) (B4)		mm	2755	
	9	Overall Width (C1)		mm	1225	
	10	Mast Hight After Mast Fall (A3)		mm	2180	
	11	Lift Height (A1)		mm	4100	
	12	Overhead Guard Height (A5)		mm	2150	
	13	Turning Radius (C2)		mm	2515	
	14	Front Overhang (B2)		mm	485	
	15	Min.Right Angle Channel Width		mm	2545	
	16	Wheelbase (B3)		mm	1760	
	17	Track	Front	mm	1000	
	18		Rear	mm	970	
	19	Ground Clearance	Mast	mm	130	
	20		Car Center	mm	200	
Performance	21	Speed	Travel Full Load	km/h	18	
	22		Travel No Load	km/h	19.5	
	23		Lifting Full Load	mm/s	330	
	24		Lifting No Load	mm/s	370	
	25		Lowering Full Load	mm/s	400	
	26		Lowering No Load	mm/s	350	
	27	Max.Drawbar Pull	Full/No Load	kg	1850/1250	
	28	Max.Gradeability	Full/No Load	%	15/18	
Tire	29	Front Tire			28X9-15	
	30	Rear Tire			650-10	
Weight	31	Total Weight		kg	4650	
Pover&Transmission	32	Battery	Voltage/Capacity	V/AH	12/80	
	33	Engine	Model		Xinchai 4D27G31	Quanchai4C2-50V32 /4C2-50C43(京四)
	34		Rated Pover/Speed	Kw/rpm	36.8/2500	36.8/2500
	35		Max.Torque/Speed	N.m/rpm	157/1800	157/1800
	36	Work Pressure		Mpa	17.5	

3.5t 2 Stage Mast

Mast Height	Carrying Capacity (Load center is 500mm)(kg)	Mast Height After Mast Fall	Free Lifting Height (mm)	Full Mast Height (mm)	Mast Tilting Angle (F/R)	Total Weight (kg)
2000	3500	1680	135	3100	6-12°	4565
2500	3500	1930	135	3600	6-12°	4600
3000	3500	2180	135	4100	6-12°	4650
3300	3500	2330	135	4400	6-12°	4675
3500	3500	2430	135	4600	6-12°	4700
3700	3500	2530	135	4800	6-12°	4720
4000	3200*3500	2730	135	5100	6-6°	4785
4250	2850*3000	2855	135	5350	6-6°	4810
4500	2600*3000	2980	135	5600	6-6°	4835
5000	2100*2850	3230	135	6100	3-6°	4880
5500	*2400	3530	135	6600	3-6°	4930
6000	*2000	3780	135	7100	3-6°	4975

Note:(1)*indicates the rated load capacity of double tires on the front wheel
(2) The self-Weight in the table is the weight of double tires:+110kg

BULLER.

Customize Mast

Attachments

Cab

Optional Engine

Solid Tire

Toyota Seat

H Series CPC 3.8 Tons Performance Parameters

BULLER.

HIGH PERFORMANCE HYDRAULIC CYLINDER

POWERFUL ENGINE

LOW FUEL CONSUMPTION AND HIGH PERFORMANCE

WEAR-RESISTANT TYRE

ULTRA-HIGH SECURITY

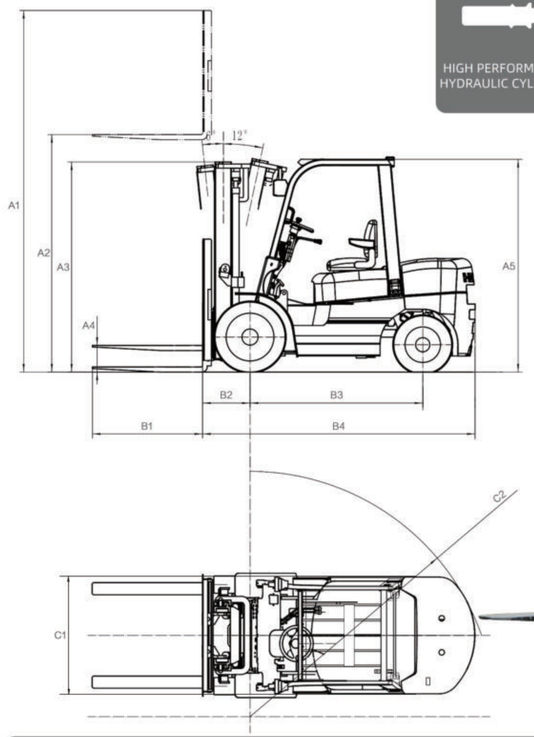

H Series CPC 3.8 Tons Performance Parameters

General	1	Model			CPC38/CPCD38
	2	Rated Load Capacity		kg	3800
	3	Load Center		mm	500
Dimensions	4	Lifting Height (A2)		mm	3000
	5	Free lifting Height (A4)		mm	135
	6	Fork Size (B1)	LxWxT	mm	1220X125X50
	7	Mast Tilting Angle	F/R		6/12
	8	Length(without fork) (B4)		mm	2815
	9	Overall Width (C1)		mm	1225
	10	Mast Hight After Mast Fall (A3)		mm	2180
	11	Lift Height (A1)		mm	4100
	12	Overhead Guard Height (A5)		mm	2070
	13	Turning Radius (C2)		mm	2540
	14	Front Overhang (B2)		mm	485/570
	15	Min.Right Angle Channel Width		mm	2500
	16	Wheelbase (B3)		mm	1760
	17	Track	Front	mm	1000
	18		Rear	mm	970
	19	Ground Clearance	Mast	mm	130
	20		Car Center	mm	200
Performance	21	Speed	Travel Full Load	km/h	20
	22		Travel No Load	km/h	20
	23		Lifting Full Load	mm/s	380
	24		Lifting No Load	mm/s	420
	25		Lowering Full Load	mm/s	420
	26		Lowering No Load	mm/s	460
	27	Max.Drawbar Pull	Full/No Load	kg	1950/1300
	28	Max.Gradeability	Full/No Load	%	16/20
Tire	29	Front Tire			250-15
	30	Rear Tire			650-10
Weight	31	Total Weight		kg	4780
Pover&Transmission	32	Battery	Voltage/Capacity	V/AH	12/80
	33	Engine	Model		Xinchai 4D29G31
	34		Rated Pover/Speed	Kw/rpm	36.8/2500
	35		Max.Torque/Speed	N.m/rpm	150/1600
	36	Work Pressure		Mpa	17.5

- Adopt a new design style
- Bold rear legs of the overhead guard to ensure the safety of the driver
- The design accords with ergonomics, the driving is comfortable, the field of vision is wide, the operation is sensitive
- Hydraulic system of priority valve is configured to effectively improve the lifting speed
- Using integrally cast steering axle and drive axle to improve the reliability of the whole vehicle
- Using solid counterweight, the turning radius is greatly reduced

3.8t 2 Stage Mast

Mast Height	Carrying Capacity (Load center is 500mm)(kg)	Mast Height After Mast Fall	Free Lifting Height (mm)	Full Mast Height (mm)	Mast Tilting Angle (F/R)	Total Weight (kg)
2000	3800	1680	135	3100	6-12°	4765
2500	3800	1930	135	3600	6-12°	4800
3000	3800	2180	135	4100	6-12°	4850
3300	3800	2330	135	4400	6-12°	4875
3500	3800	2430	135	4600	6-12°	4900
3700	3800	2530	135	4800	6-12°	4920
4000	3800	2730	135	5100	6-6°	4985
4250	3550	2855	135	5350	6-6°	5010
4500	3400	2980	135	5600	6-6°	5035
5000	3000*3300	3230	135	6100	3-6°	5080
5500	2500*2800	3530	135	6600	3-6°	5130
6000	2200*2500	3780	135	7100	3-6°	5175

Note:(1)*indicates the rated load capacity of double tires on the front wheel
(2) The self-Weight in the table is the weight of double tires:+110kg

BULLER.

Customize Mast

Attachments

Cab

Optional Engine

Solid Tire

Toyota Seat

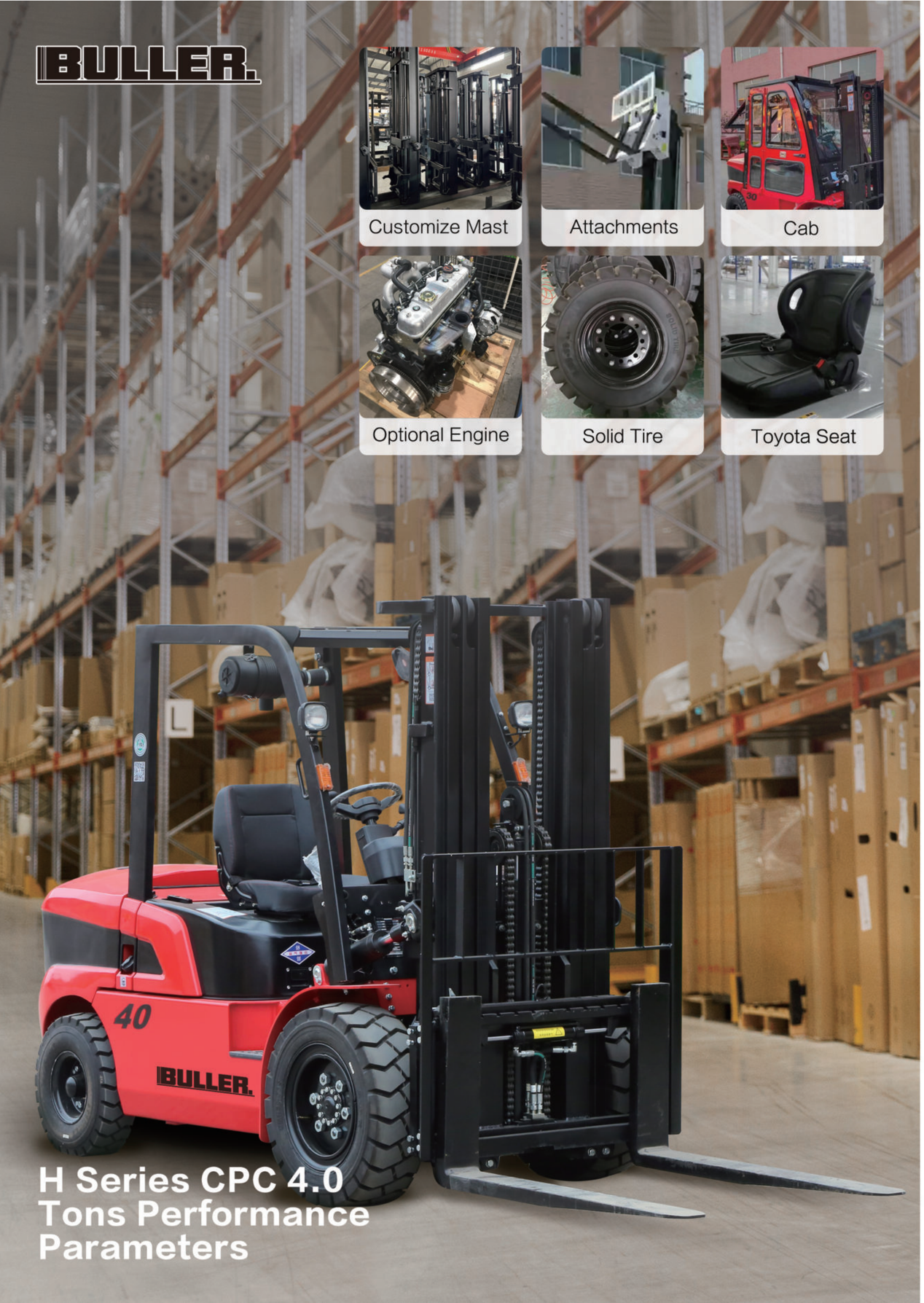

H Series CPC 4.0 Tons Performance Parameters

BULLER.

HIGH PERFORMANCE HYDRAULIC CYLINDER

POWERFUL ENGINE

LOW FUEL CONSUMPTION AND HIGH PERFORMANCE

WEAR-RESISTANT TYRE

ULTRA-HIGH SECURITY

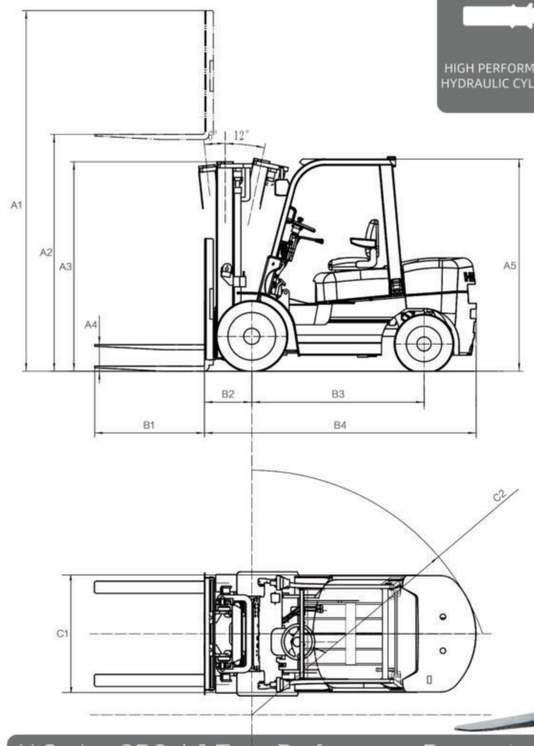

H Series CPC 4.0 Tons Performance Parameters

General	1	Model			CPC40/CPCD40
	2	Rated Load Capacity		kg	4000
	3	Load Center		mm	500
Dimensions	4	Lifting Height (A2)		mm	3000
	5	Free lifting Height (A4)		mm	135
	6	Fork Size (B1)	LxWxT	mm	1220X125X50
	7	Mast Tilting Angle	F/R		6/12
	8	Length(without fork) (B4)		mm	2915
	9	Overall Width (C1)		mm	1225
	10	Mast Hight After Mast Fall (A3)		mm	2180
	11	Lift Height (A1)		mm	4100
	12	Overhead Guard Height (A5)		mm	2070
	13	Turning Radius (C2)		mm	2615
	14	Front Overhang (B2)		mm	485/570
	15	Min.Right Angle Channel Width		mm	2600
	16	Wheelbase (B3)		mm	1860
	17	Track	Front	mm	1000
	18		Rear	mm	970
	19	Ground Clearance	Mast	mm	130
	20		Car Center	mm	200
Performance	21	Speed	Travel Full Load	km/h	20
	22		Travel No Load	km/h	20
	23		Lifting Full Load	mm/s	380
	24		Lifting No Load	mm/s	420
	25		Lowering Full Load	mm/s	420
	26		Lowering No Load	mm/s	460
	27	Max.Drawbar Pull	Full/No Load	kg	2000/1330
	28	Max.Gradeability	Full/No Load	%	16/20
Tire	29	Front Tire			250-15
	30	Rear Tire			650-10
Weight	31	Total Weight		kg	4950
Pover&Transmission	32	Battery	Voltage/Capacity	V/AH	12/80
	33	Engine	Model		Quanchai4C4-50V31
	34		Rated Pover/Speed	Kw/rpm	36.8/2500
	35		Max.Torque/Speed	N.m/rpm	131/1800
	36	Work Pressure		Mpa	17.5

- Adopt a new design style
- Bold rear legs of the overhead guard to ensure the safety of the driver
- The design accords with ergonomics, the driving is comfortable, the field of vision is wide, the operation is sensitive
- Hydraulic system of priority valve is configured to effectively improve the lifting speed
- Using integrally cast steering axle and drive axle to improve the reliability of the whole vehicle
- Using solid counterweight, the turning radius is greatly reduced

4.0t 2 Stage Mast

Mast Height	Carrying Capacity (Load center is 500mm)(kg)	Mast Height After Mast Fall	Free Lifting Height (mm)	Full Mast Height (mm)	Mast Tilting Angle (F/R)	Total Weight (kg)
2000	4000	1680	135	3100	6-12°	4865
2500	4000	1930	135	3600	6-12°	4900
3000	4000	2180	135	4100	6-12°	4950
3300	4000	2330	135	4400	6-12°	4975
3500	4000	2430	135	4600	6-12°	5000
3700	4000	2530	135	4800	6-12°	5020
4000	4000	2730	135	5100	6-6°	5085
4250	3750	2855	135	5350	6-6°	5110
4500	3600	2980	135	5600	6-6°	5135
5000	3200*3500	3230	135	6100	3-6°	5185
5500	2700*3000	3530	135	6600	3-6°	5230
6000	2400*2700	3780	135	7100	3-6°	5275

Note:(1)*indicates the rated load capacity of double tires on the front wheel
(2) The self-Weight in the table is the weight of double tires:+110kg

BULLER.

Customize Mast

Attachments

Cab

Optional Engine

Solid Tire

Toyota Seat

H Series CPC 5.0 Tons Performance Parameters

BULLER.

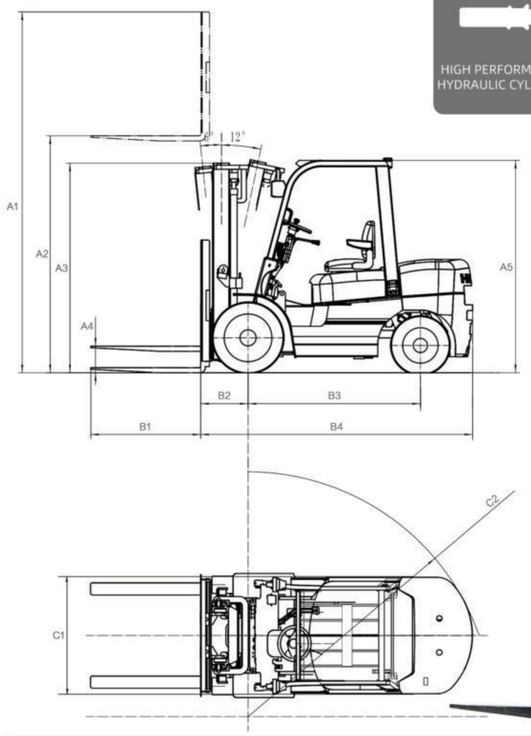

HIGH PERFORMANCE HYDRAULIC CYLINDER

POWERFUL ENGINE

LOW FUEL CONSUMPTION AND HIGH PERFORMANCE

WEAR-RESISTANT TYRE

ULTRA-HIGH SECURITY

H Series CPC 5.0 Tons Performance Parameters

General	1	Model			CPC50/CPCD50	
	2	Rated Load Capacity		kg	5000	
	3	Load Center		mm	500	
Dimensions	4	Lifting Height (A2)		mm	3000	
	5	Free lifting Height (A4)		mm	160	
	6	Fork Size (B1)	LxWxT	mm	1220X155X55	
	7	Mast Tilting Angle	F/R		6/12	
	8	Length(without fork) (B4)		mm	3248	
	9	Overall Width (C1)		mm	1480	
	10	Mast Hight After Mast Fall (A3)		mm	2275	
	11	Lift Height (A1)		mm	4217	
	12	Overhead Guard Height (A5)		mm	2265	
	13	Turning Radius (C2)		mm	2930	
	14	Front Overhang (B2)		mm	560/588	
	15	Min.Right Angle Channel Width		mm	2900	
	16	Wheelbase (B3)		mm	2100	
	17	Track	Front	mm	1180	
	18		Rear	mm	1190	
	19	Ground Clearance	Mast	mm	175	
	20		Car Center	mm	243	
Performance	21	Speed	Travel Full Load	km/h	21	
	22		Travel No Load	km/h	21.6	
	23		Lifting Full Load	mm/s	490	
	24		Lifting No Load	mm/s	510	
	25		Lowering Full Load	mm/s	420	
	26		Lowering No Load	mm/s	400	
	27	Max.Drawbar Pull	Full/No Load	kg	3000/1300	
	28	Max.Gradeability	Full/No Load	%	19/20	
Tire	29	Front Tire			300-15	
	30	Rear Tire			700-12	
Weight	31	Total Weight		kg	6780	
Pover&Transmission	32	Battery	Voltage/Capacity	V/AH	24/80	24/80
	33	Engine	Model		Xinchai 4D35ZG31	Quanchai 4C6-85U32
	34		Rated Pover/Speed	Kw/rpm	60/2200	62.5/2200
	35		Max.Torque/Speed	N.m/rpm	300/1600-1800	320/1800
	36	Work Pressure		Mpa	20	

- Adopt a new design style
- Bold rear legs of the overhead guard to ensure the safety of the driver
- The design accords with ergonomics, the driving is comfortable, the field of vision is wide, the operation is sensitive
- Hydraulic system of priority valve is configured to effectively improve the lifting speed
- Using integrally cast steering axle and drive axle to improve the reliability of the whole vehicle
- Using solid counterweight, the turning radius is greatly reduced

5.0t 2 Stage Mast

Mast Height	Carrying Capacity (Load center is 500mm)(kg)	Mast Height After Mast Fall	Free Lifting Height (mm)	Full Mast Height (mm)	Mast Tilting Angle (F/R)	Total Weight (kg)
2610	5000	2075	150	3820	6-12°	3595
2710	5000	2125	150	3920	6-12°	3640
3000	5000	2275	150	4220	6-12°	3680
3300	5000	2425	150	4520	6-12°	3705
3500	5000	2525	150	4720	6-12°	3725
3700	5000	2625	150	4920	6-12°	3745
4000	5000	2825	150	5220	6-6°	3810
4250	4750	2950	150	5470	6-6°	3830
4500	4600	3075	150	5720	6-6°	3850
5000	4200*4500	3325	150	6220	3-6°	3895
5500	3700*4000	3575	150	6720	3-6°	4085
6000	3400*3700	3825	150	7220	3-6°	4130

Note:(1)*indicates the rated load capacity of double tires on the front wheel
(2) The self-Weight in the table is the weight of double tires:+110kg

BULLER.

Customize Mast

Attachments

Cab

Optional Engine

Solid Tire

Toyota Seat

H Series CPCD 5.0P Tons Performance Parameters

BULLER.

HIGH PERFORMANCE HYDRAULIC CYLINDER | POWERFUL ENGINE | LOW FUEL CONSUMPTION AND HIGH PERFORMANCE | WEAR-RESISTANT TYRE | ULTRA-HIGH SECURITY

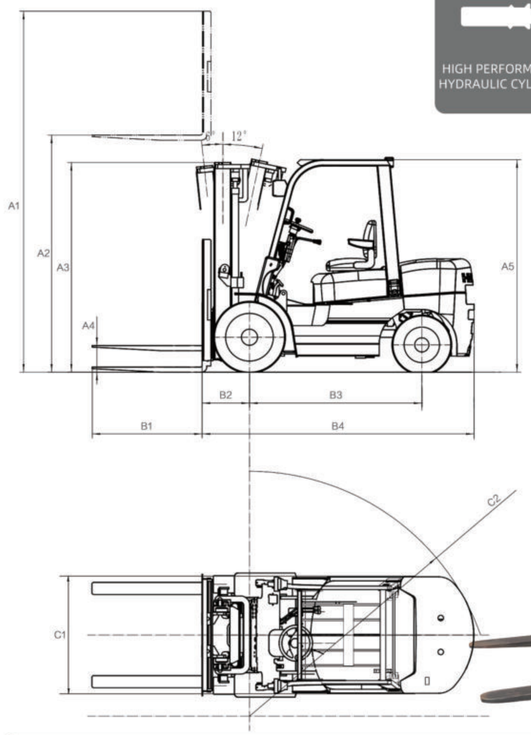

H Series CPCD 5.0P Tons Performance Parameters

General	1	Model			CPCD50P
	2	Rated Load Capacity		kg	5000
	3	Load Center		mm	600
Dimensions	4	Lifting Height (A2)		mm	3000
	5	Free lifting Height (A4)		mm	200
	6	Fork Size (B1)	LxWxT	mm	1220×150×55
	7	Mast Tilting Angle	F/R		6/12
	8	Length(without fork) (B4)		mm	3405
	9	Overall Width (C1)		mm	1995
	10	Mast Hight After Mast Fall (A3)		mm	2500
	11	Lift Height (A1)		mm	4365
	12	Overhead Guard Height (A5)		mm	2450
	13	Turning Radius (C2)		mm	3250
	14	Front Overhang (B2)		mm	600/565
	15	Min.Right Angle Channel Width		mm	2960
	16	Wheelbase (B3)		mm	2250
	17	Track	Front	mm	1470
	18		Rear	mm	1700
	19	Ground Clearance	Mast	mm	200
	20		Car Center	mm	232
Performance	21	Speed	Travel Full Load	km/h	28
	22		Travel No Load	km/h	33
	23		Lifting Full Load	mm/s	440
	24		Lifting No Load	mm/s	460
	25		Lowering Full Load	mm/s	380
	26		Lowering No Load	mm/s	350
	27	Max.Drawbar Pull	Full/No Load	kg	5300
	28	Max.Gradeability	Full/No Load	%	15
Tire	29	Front Tire			(Double) 8.25-15-14PR
	30	Rear Tire			8.25-15-14PR
Weight	31	Total Weight		kg	7980
Pover&Transmission	32	Battery	Voltage/Capacity	V/AH	24/130
	33	Engine	Model		Quanchai 4J1-115C32
	34		Rated Pover/Speed	Kw/rpm	85/2200
	35		Max.Torque/Speed	N.m/rpm	500/1600
	36	Work Pressure		Mpa	20

- Adopt a new design style
- Bold rear legs of the overhead guard to ensure the safety of the driver
- The design accords with ergonomics, the driving is comfortable, the field of vision is wide, the operation is sensitive
- Hydraulic system of priority valve is configured to effectively improve the lifting speed
- Using integrally cast steering axle and drive axle to improve the reliability of the whole vehicle
- Using solid counterweight, the turning radius is greatly reduced

5.0Pt 2 Stage Mast

Mast Height	Carrying Capacity (Load center is 500mm)(kg)	Mast Height After Mast Fall	Free Lifting Height (mm)	Full Mast Height (mm)	Mast Tilting Angle (F/R)	Total Weight (kg)
2700	6000	2350	200	4070	6-12°	9279
2750	6000	2375	200	4120	6-12°	9293
3000	6000	2500	200	4370	6-12°	9320
3250	6000	2625	200	4620	6-12°	9360
3300	6000	2650	200	4670	6-12°	9369
3500	6000	2750	200	4870	6-12°	9401
3750	6000	2875	200	5120	6-12°	9442
4000	6000	3050	200	5370	6-12°	9608
4250	6000	3175	200	5620	6-12°	9648
4500	6000	3300	200	5870	6-12°	9689
4750	6000	3425	200	6120	6-6°	9730
5000	6000	3550	200	6370	6-6°	9770

Note:(1)*indicates the rated load capacity of double tires on the front wheel
(2) The self-Weight in the table is the weight of double tires:+110kg

BULLER.


Customize Mast


Attachments


Cab


Optional Engine


Solid Tire


Toyota Seat

H Series CPCD 7.0 Tons Performance Parameters

BULLER.

HIGH PERFORMANCE HYDRAULIC CYLINDER

POWERFUL ENGINE

LOW FUEL CONSUMPTION AND HIGH PERFORMANCE

WEAR-RESISTANT TYRE

ULTRA-HIGH SECURITY

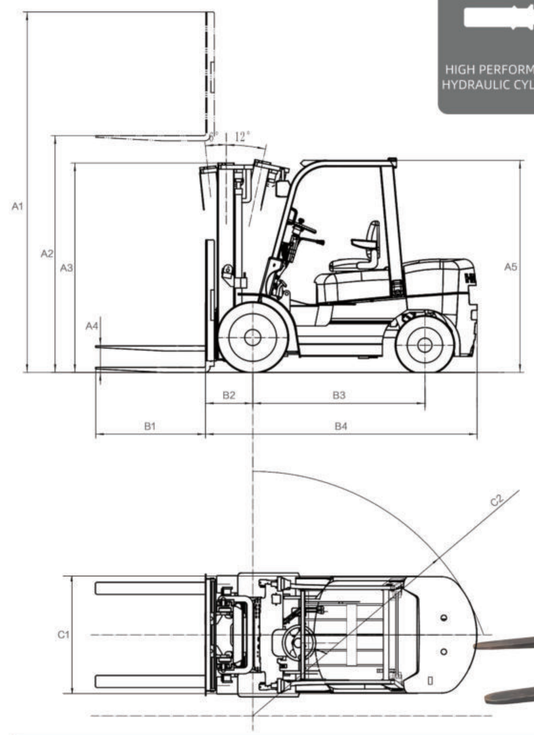

H Series CPCD 7.0 Tons Performance Parameters

General	1	Model			CPCD70
	2	Rated Load Capacity		kg	7000
	3	Load Center		mm	600
Dimensions	4	Lifting Height (A2)		mm	3000
	5	Free lifting Height (A4)		mm	200
	6	Fork Size (B1)	LxWxT	mm	1220X150X65
	7	Mast Tilting Angle	F/R		6/12
	8	Length(without fork) (B4)		mm	3550
	9	Overall Width (C1)		mm	1995
	10	Mast Hight After Mast Fall (A3)		mm	2500
	11	Lift Height (A1)		mm	4365
	12	Overhead Guard Height (A5)		mm	2450
	13	Turning Radius (C2)		mm	3360
	14	Front Overhang (B2)		mm	600/710
	15	Min.Right Angle Channel Width		mm	3040
	16	Wheelbase (B3)		mm	2250
	17	Track	Front	mm	1470
	18		Rear	mm	1700
	19	Ground Clearance	Mast	mm	200
	20		Car Center	mm	232
Performance	21	Speed	Travel Full Load	km/h	28
	22		Travel No Load	km/h	33
	23		Lifting Full Load	mm/s	420
	24		Lifting No Load	mm/s	450
	25		Lowering Full Load	mm/s	380
	26		Lowering No Load	mm/s	350
	27	Max.Drawbar Pull	Full/No Load	kg	5300/2300
	28	Max.Gradeability	Full/No Load	%	15/20
Tire	29	Front Tire			(Double) 8.25-15-14PR
	30	Rear Tire			8.25-15-14PR
Weight	31	Total Weight		kg	9170
Pover&Transmission	32	Battery	Voltage/Capacity	V/AH	24/130
	33	Engine	Model		Quanchai 4J1-115C32
	34		Rated Pover/Speed	Kw/rpm	85/2200
	35		Max.Torque/Speed	N.m/rpm	500/1600
	36	Work Pressure		Mpa	20

H Series CPCD 7.0 Tons Performance Parameters

- Adopt a new design style
- Bold rear legs of the overhead guard to ensure the safety of the driver
- The design accords with ergonomics, the driving is comfortable, the field of vision is wide, the operation is sensitive
- Hydraulic system of priority valve is configured to effectively improve the lifting speed
- Using integrally cast steering axle and drive axle to improve the reliability of the whole vehicle
- Using solid counterweight, the turning radius is greatly reduced

7.0t 2 Stage Mast

Mast Height	Carrying Capacity (Load center is 500mm)(kg)	Mast Height After Mast Fall	Free Lifting Height (mm)	Full Mast Height (mm)	Mast Tilting Angle (F/R)	Total Weight (kg)
2700	6000	2350	200	4070	6-12°	9279
2750	6000	2375	200	4120	6-12°	9293
3000	6000	2500	200	4370	6-12°	9320
3250	6000	2625	200	4620	6-12°	9360
3300	6000	2650	200	4670	6-12°	9369
3500	6000	2750	200	4870	6-12°	9401
3750	6000	2875	200	5120	6-12°	9442
4000	6000	3050	200	5370	6-12°	9608
4250	6000	3175	200	5620	6-12°	9648
4500	6000	3300	200	5870	6-12°	9689
4750	6000	3425	200	6120	6-6°	9730
5000	6000	3550	200	6370	6-6°	9770

Note:(1)*indicates the rated load capacity of double tires on the front wheel
(2) The self-Weight in the table is the weight of double tires:+110kg

BULLER.

Customize Mast

Attachments

Cab

Optional Engine

Solid Tire

Toyota Seat

H Series CPC 10.0 Tons Performance Parameters

BULLER.

HIGH PERFORMANCE HYDRAULIC CYLINDER

POWERFUL ENGINE

LOW FUEL CONSUMPTION AND HIGH PERFORMANCE

WEAR-RESISTANT TYRE

ULTRA-HIGH SECURITY

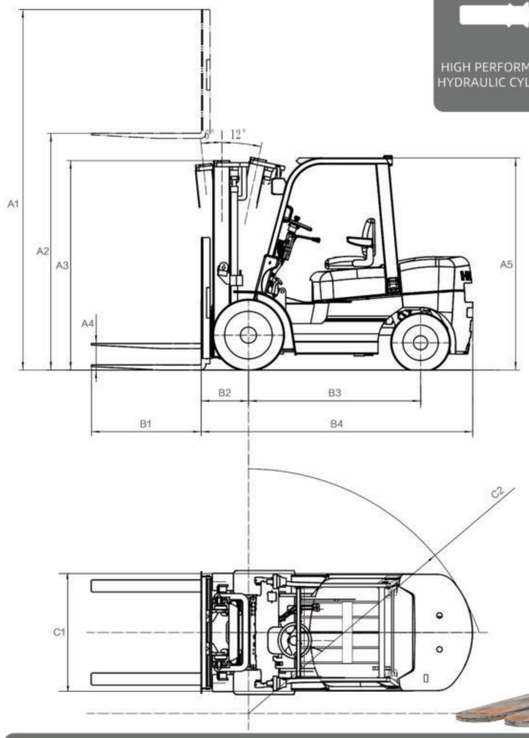

H Series CPC 10.0 Tons Performance Parameters

General	1	Model				CPCD100
	2	Rated Load Capacity			kg	10000
	3	Load Center			mm	600
Dimensions	4	Lifting Height (A2)			mm	3000
	5	Free lifting Height (A4)			mm	180
	6	Fork Size (B1)		LxWxT	mm	1220X175X80
	7	Mast Tilting Angle		F/R		6/12
	8	Length(without fork) (B4)			mm	4270
	9	Overall Width (C1)			mm	2164
	10	Mast Hight After Mast Fall (A3)			mm	2700
	11	Lift Height (A1)			mm	4400
	12	Overhead Guard Height (A5)			mm	2550
	13	Turning Radius (C2)			mm	4110
	14	Front Overhang (B2)			mm	700/755
	15	Min.Right Angle Channel Width			mm	3740
	16	Wheelbase (B3)			mm	2800
	17	Track		Front	mm	1600
	18			Rear	mm	1720
	19	Ground Clearance	Mast		mm	240
	20		Car Center		mm	290
Performance	21	Speed	Travel	Full Load	km/h	24
	22			No Load	km/h	26
	23		Lifting	Full Load	mm/s	330
	24			No Load	mm/s	350
	25		Lowering	Full Load	mm/s	380
	26			No Load	mm/s	350
	27	Max.Drawbar Pull		Full/No Load	kg	62000/49500
	28	Max.Gradeability		Full/No Load	%	15/20
Tire	29	Front Tire				900-20-14
	30	Rear Tire				900-20-14
Weight	31	Total Weight			kg	13120
Pover&Transmission	32	Battery	Voltage/Capacity		V/AH	24/80
	33	Engine	Model			Xichai CA4DF3-12GCG3U / Quanchai 4J1-115C32
	34		Rated Pover/Speed		Kw/rpm	85/2200 / 85/2200
	35		Max.Torque/Speed		N.m/rpm	460/1400-1500 / 500/1600
	36	Work Pressure			Mpa	20

- Adopt a new design style
- Bold rear legs of the overhead guard to ensure the safety of the driver
- The design accords with ergonomics, the driving is comfortable, the field of vision is wide, the operation is sensitive
- Hydraulic system of priority valve is configured to effectively improve the lifting speed
- Using integrally cast steering axle and drive axle to improve the reliability of the whole vehicle
- Using solid counterweight, the turning radius is greatly reduced

10.0t 2 Stage Mast

Mast Height	Carrying Capacity (Load center is 500mm)(kg)	Mast Height After Mast Fall	Free Lifting Height (mm)	Full Mast Height (mm)	Mast Tilting Angle (F/R)	Total Weight (kg)
3000	10000	2850	160	4225	6-12°	12860
3250	10000	2975	160	4475	6-12°	12900
3300	10000	3000	160	4525	6-12°	12935
3500	10000	3100	160	4725	6-12°	12970
3750	10000	3225	160	4975	6-12°	13000
4000	10000	3400	160	5225	6-6°	13080
4250	10000	3525	160	5650	6-6°	13120
4500	10000	3650	160	5725	6-6°	13160
4750	10000	3775	160	5975	6-6°	13200
5000	10000	3900	160	6225	3-6°	13310
5500	9000	4200	160	6725	3-6°	13360

Note:(1)*indicates the rated load capacity of double tires on the front wheel
(2) The self-Weight in the table is the weight of double tires:+110kg

BULLER.


Customize Mast


Attachments


Cab


Optional Engine


Solid Tire


Toyota Seat

All Terrain Off-road Forklift 3.0 Tons Performance Parameters

BULLER.

HIGH PERFORMANCE HYDRAULIC CYLINDER

POWERFUL ENGINE

LOW FUEL CONSUMPTION AND HIGH PERFORMANCE

WEAR-RESISTANT TYRE

ULTRA-HIGH SECURITY

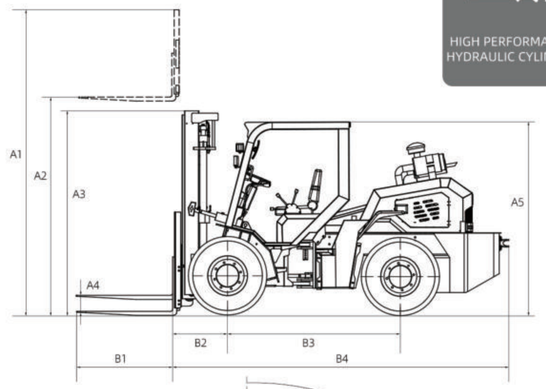

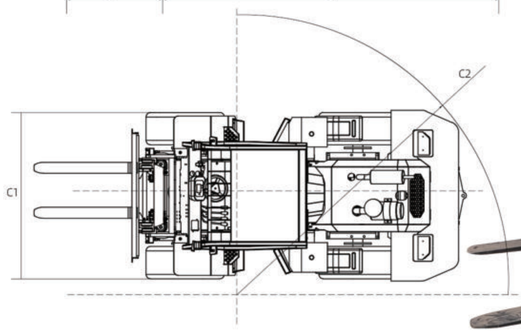

All Terrain Off-road Forklift 3.0 Tons Performance Parameters

General	1	Model				R30Q
	2	Rated Load Capacity			kg	3000
	3	Load Center			mm	500
Dimensions	4	Lifting Height (A2)			mm	3000
	5	Free lifting Height (A4)			mm	135
	6	Fork Size (B1)	LxWxT		mm	1070X122X45
	7	Mast Tilting Angle	F/R			6/12
	8	Length(without fork) (B4)			mm	3700
	9	Overall Width (C1)			mm	1800
	10	Mast Hight After Mast Fall (A3)			mm	2165
	11	Lift Height (A1)			mm	4110
	12	Overhead Guard Height (A5)			mm	2170
	13	Turning Radius (C2)			mm	4050
	14	Front Overhang (B2)			mm	610
	15	Min.Right Angle Channel Width			mm	3670
	16	Wheelbase (B3)			mm	1920
	17	Track	Front		mm	1500
	18		Rear		mm	1500
	19	Ground Clearance	Mast		mm	230
	20		Car Center		mm	300
Performance	21	Speed	Travel	Full Load	km/h	20
	22			No Load	km/h	30
	23		Lifting	Full Load	mm/s	320
	24			No Load	mm/s	340
	25		Lowering	Full Load	mm/s	320
	26			No Load	mm/s	300
	27	Max.Drawbar Pull	Full/No Load		kg	1696/1190
	28	Max.Gradeability	Full/No Load		%	15/20
Tire	29	Front Tire				20.5/70-16
	30	Rear Tire				
Weight	31	Total Weight			kg	4430
Pover&Transmission	32	Battery	Voltage/Capacity		V/AH	24/60
	33	Engine	Model			Quanchai V27-50U41(国四) / Xinchai 44DW96-50GG35
	34		Rated Pover/Speed		Kw/rpm	36.8/2400 / 36.8/2400
	35		Max.Torque/Speed		N.m/rpm	16/1600-1800
	36	Work Pressure			Mpa	17

All Terrain Off-road Forklift 3.0 Tons Performance Parameters

- Adopt a new design style
- Bold rear legs of the overhead guard to ensure the safety of the driver
- The design accords with ergonomics, the driving is comfortable, the field of vision is wide, the operation is sensitive
- Hydraulic system of priority valve is configured to effectively improve the lifting speed
- Four -wheel drive, strong power, can be suitable for complex working conditions operations
- Ground clearance is large, has good passability, and can cross the field of obstacles

3.0t 2 Stage Mast

Mast Height	Carrying Capacity (Load center is 500mm)(kg)	Mast Height After Mast Fall	Free Lifting Height (mm)	Full Mast Height (mm)	Mast Tilting Angle (F/R)	Total Weight (kg)
2000	3000	1665	135	3100	6-12°	4350
2500	3000	1915	135	3600	6-12°	4390
3000	3000	2165	135	4100	6-12°	4430
3300	3000	2315	135	4400	6-12°	4455
3500	3000	2415	135	4600	6-12°	4470
3700	3000	2515	135	4800	6-12°	4485
4000	3000	2715	135	5100	6-6°	4510
4250	2850	2840	135	5350	6-6°	4530
4500	2600	2965	135	5600	6-6°	4550
5000	2100	3215	135	6100	3-6°	4590
5500	1800	3515	135	6600	3-6°	4630
6000	1200	3765	135	7100	3-6°	4670

Note:(1)*indicates the rated load capacity of double tires on the front wheel
(2) The self-Weight in the table is the weight of double tires:+110kg

BULLER.


Customize Mast


Attachments

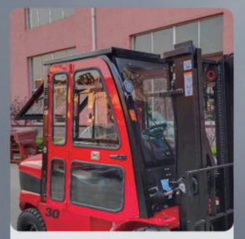
Cab


Optional Engine

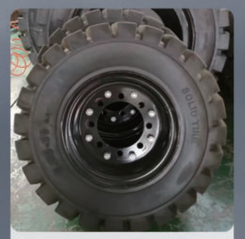
Solid Tire


Toyota Seat

All Terrain Off-road Forklift 4.0 Tons Performance Parameters

BULLER.

HIGH PERFORMANCE HYDRAULIC CYLINDER

POWERFUL ENGINE

LOW FUEL CONSUMPTION AND HIGH PERFORMANCE

WEAR-RESISTANT TYRE

ULTRA-HIGH SECURITY

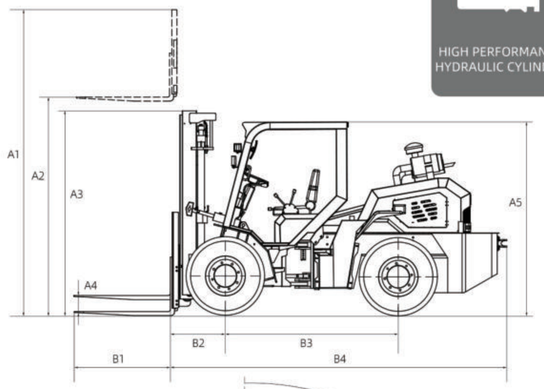

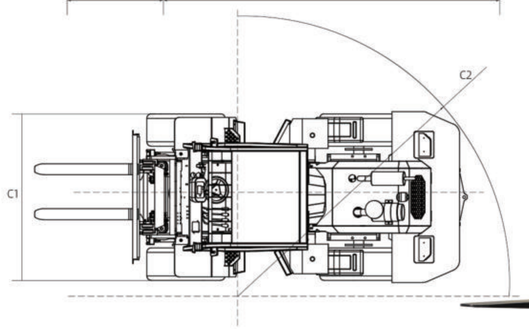

All Terrain Off-road Forklift 4.0 Tons Performance Parameters

General	1	Model			Y40Q
	2	Rated Load Capacity		kg	4000
	3	Load Center		mm	500
Dimensions	4	Lifting Height (A2)		mm	3000
	5	Free lifting Height (A4)		mm	135
	6	Fork Size (B1)	LxWxT	mm	1220X125X50
	7	Mast Tilting Angle	F/R		6/12
	8	Length(without fork) (B4)		mm	4400
	9	Overall Width (C1)		mm	1980
	10	Mast Hight After Mast Fall (A3)		mm	2195
	11	Lift Height (A1)		mm	4250
	12	Overhead Guard Height (A5)		mm	2300
	13	Turning Radius (C2)		mm	4600
	14	Front Overhang (B2)		mm	700
	15	Min.Right Angle Channel Width		mm	3000
	16	Wheelbase (B3)		mm	2200
	17	Track	Front	mm	1560
	18		Rear	mm	1560
	19	Ground Clearance	Mast	mm	260
	20		Car Center	mm	320
Performance	21	Speed	Travel Full Load	km/h	20
	22		Travel No Load	km/h	30
	23		Lifting Full Load	mm/s	320
	24		Lifting No Load	mm/s	340
	25		Lowering Full Load	mm/s	450
	26		Lowering No Load	mm/s	380
	27	Max.Drawbar Pull	Full/No Load	kg	2600/1520
	28	Max.Gradeability	Full/No Load	%	20/25
Tire	29	Front Tire			16/70-20
	30	Rear Tire			16/70-20
Weight	31	Total Weight		kg	5630
Pover&Transmission	32	Battery	Voltage/Capacity	V/AH	24/60
	33	Engine	Model		Yunnei 76kw
	34		Rated Pover/Speed	Kw/rpm	76/2400
	35		Max.Torque/Speed	N.m/rpm	260-332/1800-2200
	36	Work Pressure		Mpa	18

All Terrain Off-road Forklift 4.0 Tons Performance Parameters

- Adopt a new design style
- Bold rear legs of the overhead guard to ensure the safety of the driver
- The design accords with ergonomics, the driving is comfortable, the field of vision is wide, the operation is sensitive
- Hydraulic system of priority valve is configured to effectively improve the lifting speed
- Four -wheel drive, strong power, can be suitable for complex working conditions operations
- Ground clearance is large, has good passability, and can cross the field of obstacles

4.0t 2 Stage Mast

Mast Height	Carrying Capacity (Load center is 500mm)(kg)	Mast Height After Mast Fall	Free Lifting Height (mm)	Full Mast Height (mm)	Mast Tilting Angle (F/R)	Total Weight (kg)
2000	4000	1680	135	3100	6-12°	4865
2500	4000	1930	135	3600	6-12°	4900
3000	4000	2180	135	4100	6-12°	4950
3300	4000	2330	135	4400	6-12°	4975
3500	4000	2430	135	4600	6-12°	5000
3700	4000	2530	135	4800	6-12°	5020
4000	4000	2730	135	5100	6-6°	5085
4250	3750	2855	135	5350	6-6°	5110
4500	3600	2980	135	5600	6-6°	5135
5000	3200*3500	3230	135	6100	3-6°	5185
5500	2700*3000	3530	135	6600	3-6°	5230
6000	2400*2700	3780	135	7100	3-6°	5275

Note:(1)*indicates the rated load capacity of double tires on the front wheel
(2) The self-Weight in the table is the weight of double tires:+110kg

BULLER.

Customize Mast

Attachments

Cab

Optional Engine

Solid Tire

Toyota Seat

All Terrain Off-road Forklift 5.0 Tons Performance Parameters

BULLER.

HIGH PERFORMANCE HYDRAULIC CYLINDER

POWERFUL ENGINE

LOW FUEL CONSUMPTION AND HIGH PERFORMANCE

WEAR-RESISTANT TYRE

ULTRA-HIGH SECURITY

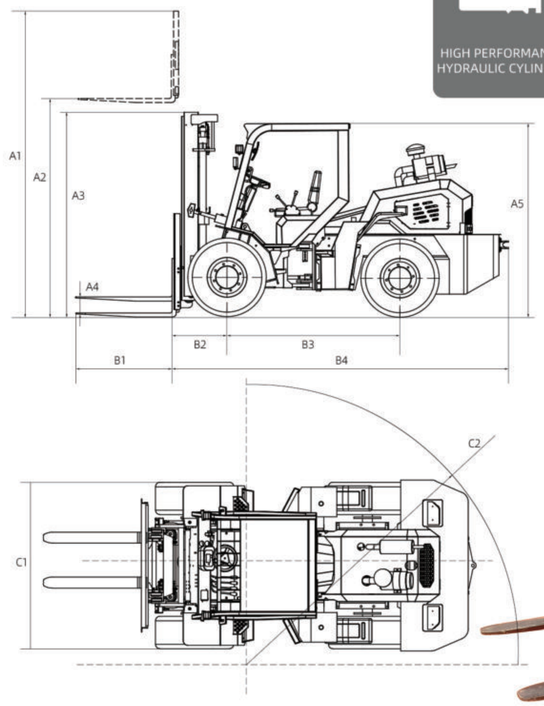

All Terrain Off-road Forklift 5.0 Tons Performance Parameters

General	1	Model			Y50Q
	2	Rated Load Capacity		kg	5000
	3	Load Center		mm	500
Dimensions	4	Lifting Height (A2)		mm	3000
	5	Free lifting Height (A4)		mm	135
	6	Fork Size (B1)	LxWxT	mm	1220X155X55
	7	Mast Tilting Angle	F/R		6/12
	8	Length(without fork) (B4)		mm	4500
	9	Overall Width (C1)		mm	2300
	10	Mast Hight After Mast Fall (A3)		mm	2335
	11	Lift Height (A1)		mm	4250
	12	Overhead Guard Height (A5)		mm	2315
	13	Turning Radius (C2)		mm	4600
	14	Front /Back Overhang(B2)		mm	680/1390
	15	Wheelbase (B3)		mm	2200
	16	Track	Front	mm	1590
	17		Rear	mm	1590
	18	Ground Clearance	Mast	mm	240
	19		Car Center	mm	260
Performance	20	Speed	Travel Full Load	km/h	15
	21		Travel No Load	km/h	24
	22		Lifting Full Load	mm/s	300
	23		Lifting No Load	mm/s	360
	24		Lowering Full Load	mm/s	400
	25		Lowering No Load	mm/s	280
	26	Max.Drawbar Pull	Full/No Load	kg	2600/1520
	27	Max.Gradeability	Full/No Load	%	20/25
Weight	28	Total Weight		kg	6330
Pover&Transmission	29	Battery	Voltage/Capacity	V/AH	24/60
	30	Engine	Model		Yunnei 76kw
	31		Rated Pover/Speed	Kw/rpm	76/2400
	32		Max.Torque/Speed	N.m/rpm	260-332/1800-2200
	33	Work Pressure		Mpa	18
	34	Gear	F/R		4/4
	35	Tire			16/70-20

- Adopt a new design style
- Bold rear legs of the overhead guard to ensure the safety of the driver
- The design accords with ergonomics, the driving is comfortable, the field of vision is wide, the operation is sensitive
- Hydraulic system of priority valve is configured to effectively improve the lifting speed
- Four -wheel drive, strong power, can be suitable for complex working conditions operations
- Ground clearance is large, has good passability, and can cross the field of obstacles

5.0t 2 Stage Mast

Mast Height	Carrying Capacity (Load center is 500mm)(kg)	Mast Height After Mast Fall	Free Lifting Height (mm)	Full Mast Height (mm)	Mast Tilting Angle (F/R)	Total Weight (kg)
2610	5000	2075	150	3820	6-12°	3595
2710	5000	2125	150	3920	6-12°	3640
3000	5000	2275	150	4220	6-12°	3680
3300	5000	2425	150	4520	6-12°	3705
3500	5000	2525	150	4720	6-12°	3725
3700	5000	2625	150	4920	6-12°	3745
4000	5000	2825	150	5220	6-6°	3810
4250	4750	2950	150	5470	6-6°	3830
4500	4600	3075	150	5720	6-6°	3850
5000	4200*4500	3325	150	6220	3-6°	3895
5500	3700*4000	3575	150	6720	3-6°	4085
6000	3400*3700	3825	150	7220	3-6°	4130

Note:(1)*indicates the rated load capacity of double tires on the front wheel
(2) The self-Weight in the table is the weight of double tires:+110kg

BULLER.

Customize Mast

Attachments

Cab

Optional Engine

Solid Tire

Toyota Seat

H Series CPY 2.5 Tons Performance Parameters

BULLER.

HIGH PERFORMANCE HYDRAULIC CYLINDER

POWERFUL ENGINE

LOW FUEL CONSUMPTION AND HIGH PERFORMANCE

WEAR-RESISTANT TYRE

ULTRA-HIGH SECURITY

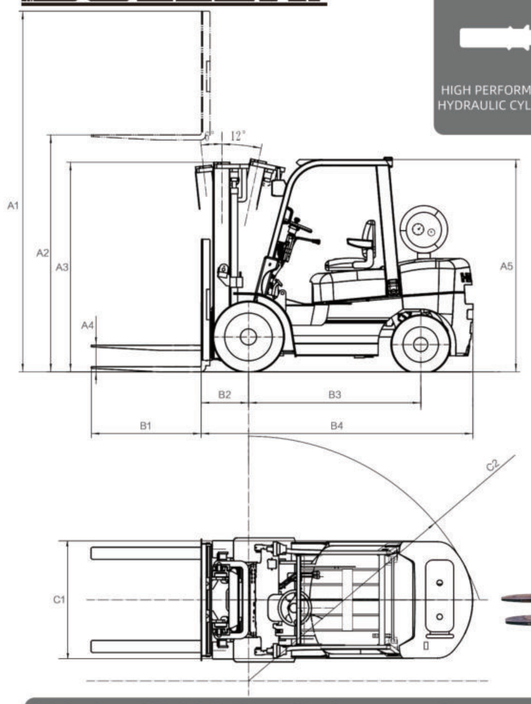

H Series CPY 2.5 Tons Performance Parameters

General	1	Model			CPY25
	2	Rated Load Capacity		kg	2500
	3	Load Center		mm	500
Dimensions	4	Lifting Height (A2)		mm	3000
	5	Free lifting Height (A4)		mm	120
	6	Fork Size (B1)	LxWxT	mm	1070X122X40
	7	Mast Tilting Angle	F/R		6/12
	8	Length(without fork) (B4)		mm	2540
	9	Overall Width (C1)		mm	1164
	10	Mast Hight After Mast Fall (A3)		mm	2000
	11	Lift Height (A1)		mm	4000
	12	Overhead Guard Height (A5)		mm	2140
	13	Turning Radius (C2)		mm	2240
	14	Front Overhang (B2)		mm	455
	15	Min.Right Angle Channel Width		mm	2280
	16	Wheelbase (B3)		mm	1600
	17	Track	Front	mm	970
	18		Rear	mm	970
	19	Ground Clearance	Mast	mm	115
	20		Car Center	mm	170
Performance	21	Speed	Travel Full Load	km/h	17
	22		Travel No Load	km/h	19.5
	23		Lifting Full Load	mm/s	530
	24		Lifting No Load	mm/s	550
	25		Lowering Full Load	mm/s	450
	26		Lowering No Load	mm/s	550
	27	Max.Drawbar Pull	Full/No Load	kg	1350/1000
	28	Max.Gradeability	Full/No Load	%	17/18 18/19
Tire	29	Front Tire			7.00-12-12PR
	30	Rear Tire			6.00-9-10PR
Weight	31	Total Weight		kg	3680
Pover&Transmission	32	Battery	Voltage/Capacity	V/AH	12/80
	33	Engine	Model		GCT GK25
	34		Rated Pover/Speed	Kw/rpm	37.5/2400
	35		Max.Torque/Speed	N.m/rpm	157/1800
	36	Work Pressure		Mpa	17.5
		Cylinder Volume		L	50
	37	Fuel Tank Capacity		L	60
	38	Tranmission Type			Mechanical

H Series CPY 2.5 Tons Performance Parameters

- Adopt a new design style
- Bold rear legs of the overhead guard to ensure the safety of the driver
- The design accords with ergonomics, the driving is comfortable, the field of vision is wide, the operation is sensitive
- Hydraulic system of priority valve is configured to effectively improve the lifting speed
- Using integrally cast steering axle and drive axle to improve the reliability of the whole vehicle
- Using solid counterweight, the turning radius is greatly reduced

2.5t 2 Stage Mast

Mast Height	Carrying Capacity (Load center is 500mm)(kg)	Mast Height After Mast Fall	Free Lifting Height (mm)	Full Mast Height (mm)	Mast Tilting Angle (F/R)	Total Weight (kg)
2000	2500	1500	120	3100	6-12°	3595
2500	2500	1350	120	3600	6-12°	3640
3000	2500	2000	120	4100	6-12°	3680
3300	2500	2150	120	4400	6-12°	3705
3500	2500	2250	120	4600	6-12°	3725
3700	2500	2350	120	4800	6-12°	3745
4000	2500	2550	120	5100	6-6°	3810
4250	2100*2500	2675	120	5350	6-6°	3830
4500	1800*2400	2800	120	5600	6-6°	3850
5000	1300*2200	3050	120	6100	3-6°	3895
5500	*1700	3350	120	6600	3-6°	4085
6000	*1400	3600	120	7100	3-6°	4130

Note:(1)*indicates the rated load capacity of double tires on the front wheel
(2) The self-Weight in the table is the weight of double tires:+110kg

BULLER.


Customize Mast


Attachments

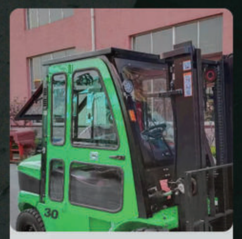
Cab


Optional Engine

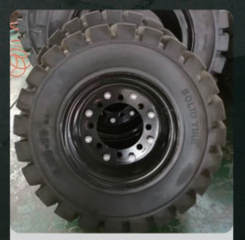
Solid Tire


Toyota Seat

H Series CPY 3.0 Tons Performance Parameters

BULLER.

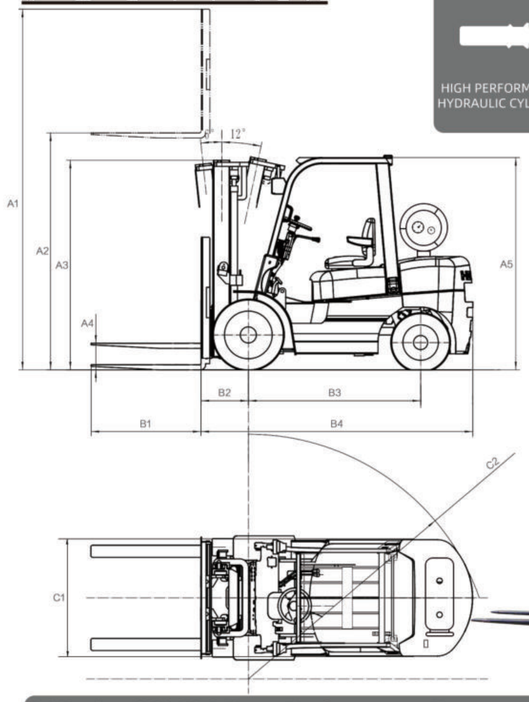

HIGH PERFORMANCE HYDRAULIC CYLINDER

POWERFUL ENGINE

LOW FUEL CONSUMPTION AND HIGH PERFORMANCE

WEAR-RESISTANT TYRE

ULTRA-HIGH SECURITY

H Series CPY 3.0 Tons Performance Parameters

General	1	Model			CPY30
	2	Rated Load Capacity		kg	3000
	3	Load Center		mm	500
Dimensions	4	Lifting Height (A2)		mm	3000
	5	Free lifting Height (A4)		mm	135
	6	Fork Size (B1)	LxWxT	mm	1220X122X45
	7	Mast Tilting Angle	F/R		6/12
	8	Length(without fork) (B4)		mm	2750
	9	Overall Width (C1)		mm	1225
	10	Mast Hight After Mast Fall (A3)		mm	2070
	11	Lift Height (A1)		mm	4100
	12	Overhead Guard Height (A5)		mm	2150
	13	Turning Radius (C2)		mm	2515
	14	Front Overhang (B2)		mm	480
	15	Min.Right Angle Channel Width		mm	2545
	16	Wheelbase (B3)		mm	1760
	17	Track	Front	mm	1000
	18		Rear	mm	970
	19	Ground Clearance	Mast	mm	130
	20		Car Center	mm	200
Performance	21	Speed	Travel Full Load	km/h	18
	22		Travel No Load	km/h	19.5
	23		Lifting Full Load	mm/s	450
	24		Lifting No Load	mm/s	500
	25		Lowering Full Load	mm/s	450
	26		Lowering No Load	mm/s	500
	27	Max.Drawbar Pull	Full/No Load	kg	1696/1190
	28	Max.Gradeability	Full/No Load	%	15/18
Tire	29	Front Tire			28x9-15
	30	Rear Tire			650-10
Weight	31	Total Weight		kg	4230
Pover&Transmission	32	Battery	Voltage/Capacity	V/AH	12/80
	33	Engine	Model		GCT GK25
	34		Rated Pover/Speed	Kw/rpm	37.5/2400
	35		Max.Torque/Speed	N.m/rpm	157/1800
	36	Work Pressure		Mpa	17.5
		Cylinder Volume		L	50
	37	Fuel Tank Capacity		L	60
	38	Tranmission Type			Mechanical

- Adopt a new design style
- Bold rear legs of the overhead guard to ensure the safety of the driver
- The design accords with ergonomics, the driving is comfortable, the field of vision is wide, the operation is sensitive
- Hydraulic system of priority valve is configured to effectively improve the lifting speed
- Using integrally cast steering axle and drive axle to improve the reliability of the whole vehicle
- Using solid counterweight, the turning radius is greatly reduced

3.0t 2 Stage Mast

Mast Height	Carrying Capacity (Load center is 500mm)(kg)	Mast Height After Mast Fall	Free Lifting Height (mm)	Full Mast Height (mm)	Mast Tilting Angle (F/R)	Total Weight (kg)
2000	3000	1570	135	3100	6-12°	4145
2500	3000	1820	135	3600	6-12°	4180
3000	3000	2070	135	4100	6-12°	4230
3300	3000	2220	135	4400	6-12°	4255
3500	3000	2320	135	4600	6-12°	4280
3700	3000	2420	135	4800	6-12°	4300
4000	3000	2620	135	5100	6-6°	4365
4250	2850*3000	2745	135	5350	6-6°	4390
4500	2600*3000	2870	135	5600	6-6°	4415
5000	2100*2850	3120	135	6100	3-6°	4460
5500	*2400	3420	135	6600	3-6°	4510
6000	*2000	3670	135	7100	3-6°	4555

Note:(1)*indicates the rated load capacity of double tires on the front wheel
(2) The self-Weight in the table is the weight of double tires:+110kg

BULLER.

Customize Mast

Attachments

Cab

Optional Engine

Solid Tire

Toyota Seat

H Series CPY 3.5 Tons Performance Parameters

BULLER.

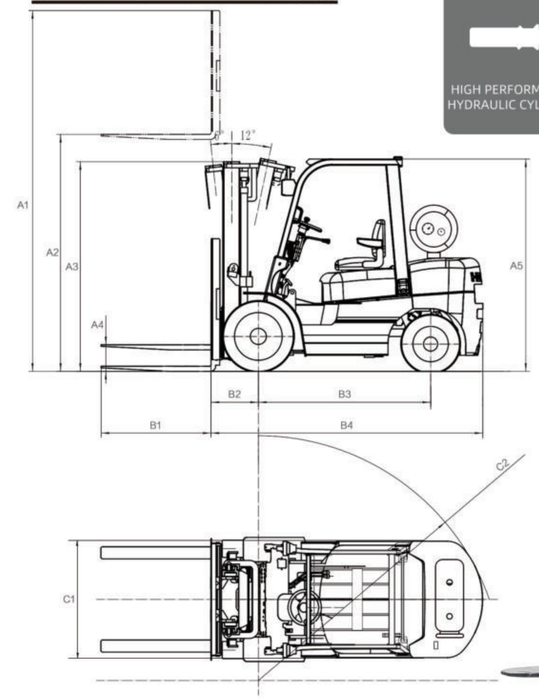

HIGH PERFORMANCE HYDRAULIC CYLINDER

POWERFUL ENGINE

LOW FUEL CONSUMPTION AND HIGH PERFORMANCE

WEAR-RESISTANT TYRE

ULTRA-HIGH SECURITY

H Series CPC 3.5 Tons Performance Parameters

General	1	Model			CPY35
	2	Rated Load Capacity		kg	3500
	3	Load Center		mm	500
Dimensions	4	Lifting Height (A2)		mm	3000
	5	Free lifting Height (A4)		mm	135
	6	Fork Size (B1)	LxWxT	mm	1220X125X50
	7	Mast Tilting Angle	F/R		6/12
	8	Length(without fork) (B4)		mm	2755
	9	Overall Width (C1)		mm	1225
	10	Mast Hight After Mast Fall (A3)		mm	2180
	11	Lift Height (A1)		mm	4100
	12	Overhead Guard Height (A5)		mm	2150
	13	Turning Radius (C2)		mm	2515
	14	Front Overhang (B2)		mm	485
	15	Min.Right Angle Channel Width		mm	2545
	16	Wheelbase (B3)		mm	1760
	17	Track	Front	mm	1000
	18		Rear	mm	970
	19	Ground Clearance	Mast	mm	130
	20		Car Center	mm	200
Performance	21	Speed	Travel / Full Load	km/h	18
	22		Travel / No Load	km/h	19.5
	23		Lifting / Full Load	mm/s	330
	24		Lifting / No Load	mm/s	370
	25		Lowering / Full Load	mm/s	400
	26		Lowering / No Load	mm/s	350
	27	Max.Drawbar Pull	Full/No Load	kg	1850/1250
	28	Max.Gradeability	Full/No Load	%	15/18
Tire	29	Front Tire			28X9-15
	30	Rear Tire			650-10
Weight	31	Total Weight		kg	4650
Pover&Transmission	32	Battery	Voltage/Capacity	V/AH	12/80
	33	Engine	Model		GCT GK25
	34		Rated Pover/Speed	Kw/rpm	37.5/2400
	35		Max.Torque/Speed	N.m/rpm	157/1800
	36	Work Pressure		Mpa	17.5
		Cylinder Volume		L	50
	37	Fuel Tank Capacity		L	60
	38	Tranmission Type			Mechanical

H Series CPY 3.5 Tons Performance Parameters

- Adopt a new design style
- Bold rear legs of the overhead guard to ensure the safety of the driver
- The design accords with ergonomics, the driving is comfortable, the field of vision is wide, the operation is sensitive
- Hydraulic system of priority valve is configured to effectively improve the lifting speed
- Using integrally cast steering axle and drive axle to improve the reliability of the whole vehicle
- Using solid counterweight, the turning radius is greatly reduced

3.5t 2 Stage Mast

Mast Height	Carrying Capacity (Load center is 500mm)(kg)	Mast Height After Mast Fall	Free Lifting Height (mm)	Full Mast Height (mm)	Mast Tilting Angle (F/R)	Total Weight (kg)
2000	3500	1680	135	3100	6-12°	4565
2500	3500	1930	135	3600	6-12°	4600
3000	3500	2180	135	4100	6-12°	4650
3300	3500	2330	135	4400	6-12°	4675
3500	3500	2430	135	4600	6-12°	4700
3700	3500	2530	135	4800	6-12°	4720
4000	3200*3500	2730	135	5100	6-6°	4785
4250	2850*3000	2855	135	5350	6-6°	4810
4500	2600*3000	2980	135	5600	6-6°	4835
5000	2100*2850	3230	135	6100	3-6°	4880
5500	*2400	3530	135	6600	3-6°	4930
6000	*2000	3780	135	7100	3-6°	4975

Note:(1)*indicates the rated load capacity of double tires on the front wheel
(2) The self-Weight in the table is the weight of double tires:+110kg

BULLER.


Customize Mast


Attachments

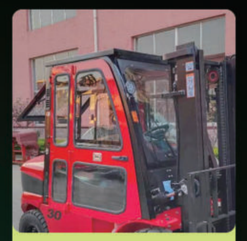
Cab


Optional Engine

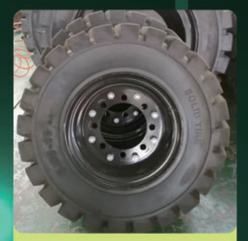
Solid Tire


Toyota Seat

H Series CPD 1.5 Tons Performance Parameters

BULLER.

HIGH PERFORMANCE HYDRAULIC CYLINDER | FAST CHARGING TIME | LONG BATTERY LIFE | WEAR-RESISTANT TYRE | ULTRA-HIGH SECURITY

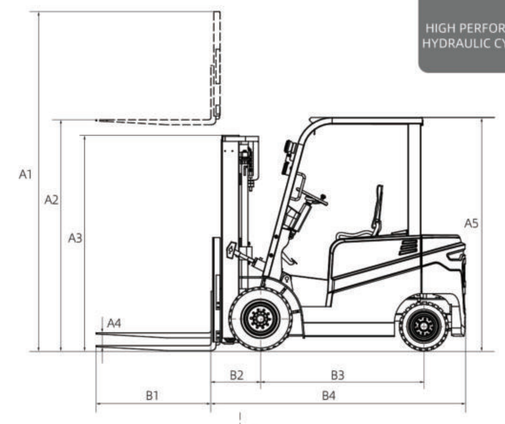

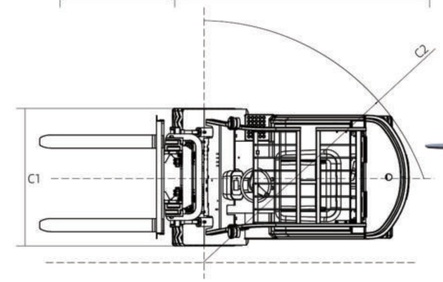

H Series CPD 1.5 Tons Performance Parameters

General	1	Model			CPD15
	2	Rated Load Capacity		kg	1500
	3	Load Center		mm	500
Dimensions	4	Lifting Height (A2)		mm	3000
	5	Free lifting Height (A4)		mm	125
	6	Fork Size (B1)	LxWxT	mm	1070X100X35
	7	Mast Tilting Angle	F/R		6/12
	8	Length(without fork) (B4)		mm	1985
	9	Overall Width (C1)		mm	1070
	10	Mast Hight After Mast Fall (A3)		mm	1995
	11	Lift Height (A1)		mm	4030
	12	Overhead Guard Height (A5)		mm	2100
	13	Turning Radius (C2)		mm	1850
	14	Front Overhang (B2)		mm	405
	15	Min.Right Angle Channel Width		mm	2280
	16	Wheelbase (B3)		mm	1250
	17	Track	Front	mm	1180
	18		Rear	mm	1190
	19	Ground Clearance	Mast	mm	100
	20		Car Center	mm	100
Performance	21	Speed	Travel Full Load	km/h	13
	22		Travel No Load	km/h	14
	23		Lifting Full Load	mm/s	350
	24		Lifting No Load	mm/s	450
	25		Lowering Full Load	mm/s	490
	26		Lowering No Load	mm/s	410
	27	Max.Drawbar Pull	Full/No Load	N	6500
	28	Max.Gradeability	Full/No Load	%	15/15
Tire	29	Front Tire			600-9
	30	Rear Tire			16X6-8
Weight	31	Total Weight		kg	2780
Pover&Transmission	32	Battery	Voltage/Capacity	V/AH	48/400
	33	Controller	Model/Manufacturer		AC/ZAPI(WEISEN)
	34	Pump Controller	Model/Manufacturer		AC/ZAPI(WEISEN)
	35	Traction Motor	Power 52-60min	Kw	7.5
	36	Lifting Motor	Power 15min	Kw	10
	37	Work Pressure		Mpa	14.5

- Adopt a new design style
- Bold rear legs of the overhead guard to ensure the safety of the driver
- The design accords with ergonomics, the driving is comfortable, the field of vision is wide, the operation is sensitive
- Hydraulic system of priority valve is configured to effectively improve the lifting speed
- Using integrally cast steering axle and drive axle to improve the reliability of the whole vehicle
- Using solid counterweight, the turning radius is greatly reduced

1.5t 2 Stage Mast

Mast Height	Carrying Capacity (Load center is 500mm)(kg)	Mast Height After Mast Fall	Free Lifting Height (mm)	Full Mast Height (mm)	Mast Tilting Angle (F/R)
2500	1500	1745	125	3530	6-12°
2700	1500	1845	125	3730	6-12°
3000	1500	1995	125	4030	6-12°
3300	1500	2145	125	4330	6-12°
3500	1500	2245	125	4530	6-12°
3700	1500	2345	125	4730	6-12°
4000	1500	2545	125	5030	6-6°
4500	1300	2795	125	5530	6-6°
5000	1000	2895	125	6030	6-6°
5500	900	2895	125	6530	6-6°
6000	600	3045	125	7030	6-6°

Note:(1)*indicates the rated load capacity of double tires on the front wheel
(2) The self-Weight in the table is the weight of double tires:+110kg

BULLER.


Customize Mast


Attachments


Cab


Optional Engine


Solid Tire


Toyota Seat

H Series CPD 2.0 Tons Performance Parameters

BULLER.

HIGH PERFORMANCE HYDRAULIC CYLINDER | FAST CHARGING TIME | LONG BATTERY LIFE | WEAR-RESISTANT TYRE | ULTRA-HIGH SECURITY

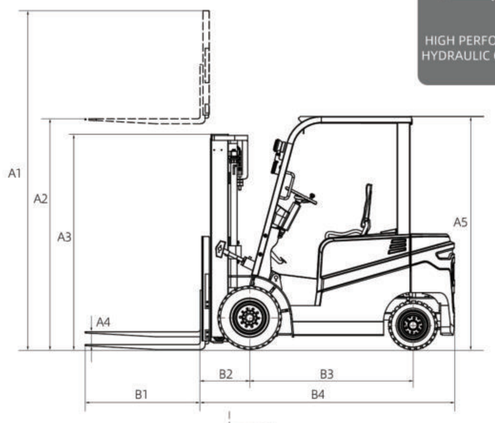

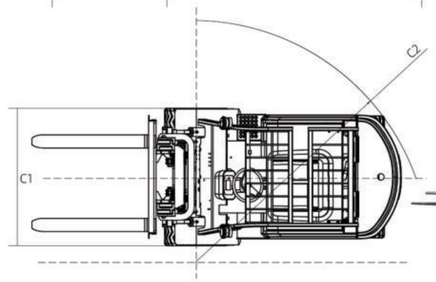

H Series CPD 2.0 Tons Performance Parameters

General	1	Model			CPD20
	2	Rated Load Capacity		kg	2000
	3	Load Center		mm	500
Dimensions	4	Lifting Height (A2)		mm	3000
	5	Free lifting Height (A4)		mm	115
	6	Fork Size (B1)	LxWxT	mm	920X122X40
	7	Mast Tilting Angle	F/R		6/12
	8	Length(without fork) (B4)		mm	2380
	9	Overall Width (C1)		mm	1265
	10	Mast Hight After Mast Fall (A3)		mm	2000
	11	Lift Height (A1)		mm	4000
	12	Overhead Guard Height (A5)		mm	2150
	13	Turning Radius (C2)		mm	2090
	14	Front Overhang (B2)		mm	450
	15	Min.Right Angle Channel Width		mm	2380
	16	Wheelbase (B3)		mm	1520
	17	Track	Front	mm	1058
	18		Rear	mm	950
	19	Ground Clearance	Mast	mm	115
	20		Car Center	mm	170
Performance	21	Speed	Travel Full Load	km/h	13
	22		Travel No Load	km/h	14
	23		Lifting Full Load	mm/s	310
	24		Lifting No Load	mm/s	440
	25		Lowering Full Load	mm/s	490
	26		Lowering No Load	mm/s	410
	27	Max.Drawbar Pull	Full/No Load	kg	1230/1100
	28	Max.Gradeability	Full/No Load	%	15/16
Tire	29	Front Tire			23X9-10
	30	Rear Tire			18X7-8
Weight	31	Total Weight		kg	3950
Pover&Transmission	32	Battery	Voltage/Capacity	V/AH	48/500
	33	Controller	Model/Manufacturer		AC/ZAPI
	34	Pump Controller	Model/Manufacturer		AC/ZAPI
	35	Traction Motor	Power 52-60min	Kw	9
	36	Lifting Motor	Power 15min	Kw	11
	37	Work Pressure		Mpa	14.5

H Series CPD 2.0 Tons Performance Parameters

- Adopt a new design style
- Bold rear legs of the overhead guard to ensure the safety of the driver
- The design accords with ergonomics, the driving is comfortable, the field of vision is wide, the operation is sensitive
- Hydraulic system of priority valve is configured to effectively improve the lifting speed
- Using integrally cast steering axle and drive axle to improve the reliability of the whole vehicle
- Using solid counterweight, the turning radius is greatly reduced

2.0t 2 Stage Mast

Mast Height	Carrying Capacity (Load center is 500mm)(kg)	Mast Height After Mast Fall	Free Lifting Height (mm)	Full Mast Height (mm)	Mast Tilting Angle (F/R)	Total Weight (kg)
2000	2000	1500	115	3000	6-12°	3855
2500	2000	1750	115	3500	6-12°	3900
3000	2000	2000	115	4000	6-12°	3950
3300	2000	2150	115	4300	6-12°	3970
3500	2000	2250	115	4500	6-12°	4000
3700	2000	2350	115	4700	6-12°	4015
4000	2000	2550	115	5000	6-6°	4080
4250	1950	2675	115	5250	6-6°	4095
4500	1800	2800	115	5500	6-6°	4110
5000	1500*1700	3050	115	6000	3-6°	4130
5500	1400*1600	3350	115	6500	3-6°	4215
6000	950*1000	3600	115	7000	3-6°	4250

Note:(1)*indicates the rated load capacity of double tires on the front wheel
(2) The self-Weight in the table is the weight of double tires:+110kg

BULLER.


Customize Mast


Attachments


Cab


Optional Engine


Solid Tire


Toyota Seat

H Series CPD 2.5 Tons Performance Parameters

BULLER.

HIGH PERFORMANCE HYDRAULIC CYLINDER

FAST CHARGING TIME

LONG BATTERY LIFE

WEAR-RESISTANT TYRE

ULTRA-HIGH SECURITY

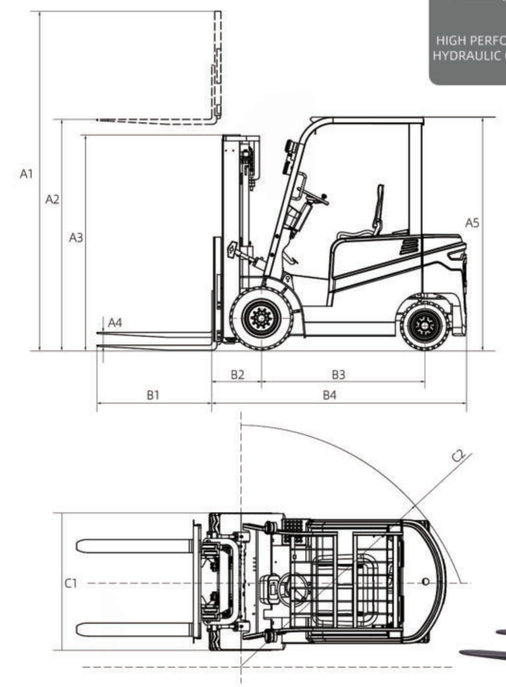

H Series CPD 2.5 Tons Performance Parameters

General	1	Model			CPD25
	2	Rated Load Capacity		kg	2500
	3	Load Center		mm	500
Dimensions	4	Lifting Height (A2)		mm	3000
	5	Free lifting Height (A4)		mm	115
	6	Fork Size (B1)	LxWxT	mm	1070X122X40
	7	Mast Tilting Angle	F/R		6/12
	8	Length(without fork) (B4)		mm	2380
	9	Overall Width (C1)		mm	1265
	10	Mast Hight After Mast Fall (A3)		mm	2000
	11	Lift Height (A1)		mm	4000
	12	Overhead Guard Height (A5)		mm	2150
	13	Turning Radius (C2)		mm	2090
	14	Front Overhang (B2)		mm	450
	15	Min.Right Angle Channel Width		mm	2380
	16	Wheelbase (B3)		mm	1520
	17	Track	Front	mm	1058
	18		Rear	mm	950
	19	Ground Clearance	Mast	mm	115
	20		Car Center	mm	170
Performance	21	Speed	Travel Full Load	km/h	13
	22		Travel No Load	km/h	14
	23		Lifting Full Load	mm/s	310
	24		Lifting No Load	mm/s	440
	25		Lowering Full Load	mm/s	490
	26		Lowering No Load	mm/s	410
	27	Max.Drawbar Pull	Full/No Load	kg	1700/1600
	28	Max.Gradeability	Full/No Load	%	14/15
Tire	29	Front Tire			23X9-10
	30	Rear Tire			18X7-8
Weight	31	Total Weight		kg	4200
Pover&Transmission	32	Battery	Voltage/Capacity	V/AH	48/600
	33	Controller	Model/Manufacturer		AC/ZAPI
	34	Pump Controller	Model/Manufacturer		AC/ZAPI
	35	Traction Motor	Power 52-60min	Kw	9
	36	Lifting Motor	Power 15min	Kw	11
	37	Work Pressure		Mpa	14.5

- Adopt a new design style
- Bold rear legs of the overhead guard to ensure the safety of the driver
- The design accords with ergonomics, the driving is comfortable, the field of vision is wide, the operation is sensitive
- Hydraulic system of priority valve is configured to effectively improve the lifting speed
- Using integrally cast steering axle and drive axle to improve the reliability of the whole vehicle
- Using solid counterweight, the turning radius is greatly reduced

2.5t 2 Stage Mast

Mast Height	Carrying Capacity (Load center is 500mm)(kg)	Mast Height After Mast Fall	Free Lifting Height (mm)	Full Mast Height (mm)	Mast Tilting Angle (F/R)	Total Weight (kg)
2000	2500	1500	115	3000	6-12°	4120
2500	2500	1750	115	3500	6-12°	4160
3000	2500	2000	115	4000	6-12°	4200
3300	2500	2150	115	4300	6-12°	4225
3500	2500	2250	115	4500	6-12°	4245
3700	2500	2350	115	4700	6-12°	4260
4000	2500	2550	115	5000	6-6°	4325
4250	2250	2675	115	5250	6-6°	4345
4500	2150	2800	115	5500	6-6°	4360
5000	1600*2000	3050	115	6000	3-6°	4395
5500	1500*1700	3350	115	6500	3-6°	4465
6000	950*1500	3600	115	7000	3-6°	4500

Note:(1)*indicates the rated load capacity of double tires on the front wheel
(2) The self-Weight in the table is the weight of double tires:+110kg

BULLER.


Customize Mast


Attachments


Cab


Optional Engine


Solid Tire


Toyota Seat

H Series CPD 3.0 Tons Performance Parameters

BULLER.

HIGH PERFORMANCE HYDRAULIC CYLINDER | FAST CHARGING TIME | LONG BATTERY LIFE | WEAR-RESISTANT TYRE | ULTRA-HIGH SECURITY

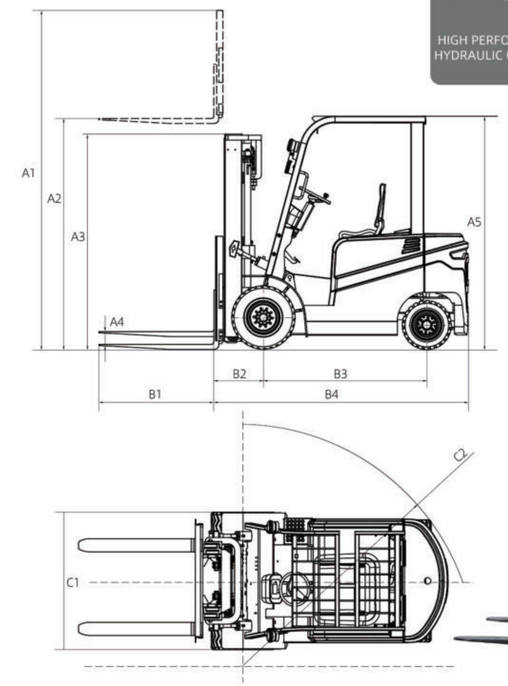

H Series CPD 3.0 Tons Performance Parameters

General	1	Model			CPD30L
	2	Rated Load Capacity		kg	3000
	3	Load Center		mm	500
Dimensions	4	Lifting Height (A2)		mm	3000
	5	Free lifting Height (A4)		mm	135
	6	Fork Size (B1)	LxWxT	mm	1220×122×45
	7	Mast Tilting Angle	F/R		6/12
	8	Length(without fork) (B4)		mm	2750
	9	Overall Width (C1)		mm	1225
	10	Mast Hight After Mast Fall (A3)		mm	2070
	11	Lift Height (A1)		mm	4100
	12	Overhead Guard Height (A5)		mm	2150
	13	Turning Radius (C2)		mm	2515
	14	Front Overhang (B2)		mm	480
	15	Min.Right Angle Channel Width		mm	2545
	16	Wheelbase (B3)		mm	1760
	17	Track	Front	mm	1000
	18		Rear	mm	970
	19	Ground Clearance	Mast	mm	130
	20		Car Center	mm	200
Performance	21	Speed	Travel Full Load	km/h	18.3
	22		Travel No Load	km/h	18.3
	23		Lifting Full Load	mm/s	380
	24		Lifting No Load	mm/s	430
	25		Lowering Full Load	mm/s	450
	26		Lowering No Load	mm/s	400
	28	Max.Gradeability	Full/No Load	%	15
Tire	29	Front Tire			28X9-15
	30	Rear Tire			650-10
Weight	31	Total Weight		kg	4368
Pover&Transmission	32	Battery	Voltage/Capacity	V/AH	153.6/202
	33	Controller	Model/Manufacturer		Haitian
	34	Pump Controller	Model/Manufacturer		Haitian
	35	Traction Motor	Power 52-60min	Kw	29
	36	Lifting Motor	Power 15min	Kw	22
	37	Work Pressure		Mpa	17.5

H Series CPD 3.0 Tons Performance Parameters

- Adopt a new design style
- Bold rear legs of the overhead guard to ensure the safety of the driver
- The design accords with ergonomics, the driving is comfortable, the field of vision is wide, the operation is sensitive
- Hydraulic system of priority valve is configured to effectively improve the lifting speed
- Using integrally cast steering axle and drive axle to improve the reliability of the whole vehicle
- Using solid counterweight, the turning radius is greatly reduced

3.0t 2 Stage Mast

Mast Height	Carrying Capacity (Load center is 500mm)(kg)	Mast Height After Mast Fall	Free Lifting Height (mm)	Full Mast Height (mm)	Mast Tilting Angle (F/R)	Total Weight (kg)
2000	3000	1570	135	3100	6-12°	4145
2500	3000	1820	135	3600	6-12°	4180
3000	3000	2070	135	4100	6-12°	4230
3300	3000	2220	135	4400	6-12°	4255
3500	3000	2320	135	4600	6-12°	4280
3700	3000	2420	135	4800	6-12°	4300
4000	3000	2620	135	5100	6-6°	4365
4250	2850*3000	2745	135	5350	6-6°	4390
4500	2600*3000	2870	135	5600	6-6°	4415
5000	2100*2850	3120	135	6100	3-6°	4460
5500	*2400	3420	135	6600	3-6°	4510
6000	*2000	3670	135	7100	3-6°	4555

Note:(1)*indicates the rated load capacity of double tires on the front wheel
(2) The self-Weight in the table is the weight of double tires:+110kg