MATERIAL SUBMITTER FOR AETS DC PRO BARRIER

Project Details

Project Name: Diversion of Storm Water Outfalls

Client: M/s Department of Municipality and Transport

Consultant: M/s Parsons

Contractor: M/s Nael & Bin Harmal Hydroexport Nayel Rashed Saif-Alshamsi - Sole Proprietorship L.L.C

Location: Abu Dhabi Corniche

From,

M/S. Access Key Automatic Gates Trading LLC
The Kanoon Group BLDG Bur Dubai Office 12
P.O.Box: 127804 Dubai, U.A.E
Tel: +971 4 351 5959
Email: info@accesskeyllc.com
Email: accesskey@accesskey.ae
Web: www.accesskeyllc.com

To,

M/S. Nael & Bin Harmal Hydroexport LLC
Abu Dhbai

Index:

Section1: Product Catalogues

Section2: Technical Specifications & Operation manual

Section3: Method Statement

Section4: Warranty Letter

Section5: Previous Approvals

Section6: Test Reports

Section 1: Product Catalogues

AETS GATE BARRIER DC PRO

Engineered for Heavy-Duty Control



DC PRO 36

Premium

AETS DC PRO 36

AETS DC Pro 36 is an advanced and highly reliable automatic boom barrier engineered for modern access control applications. Designed for superior performance and long-term durability, it delivers smooth and precise operation across commercial, industrial, and residential environments. Built with a robust drive mechanism and intelligent control system, DC Pro 36 ensures consistent performance for secure and efficient vehicle access control.

- **High-Durability Industrial Design**
- **Advanced German Technology**
- **Brushless Servo DC Motor Drive**
- **Fast and Smooth Boom Operation**
- **Energy-Efficient, Low Power Consumption**
- **Supports Multiple Access Control Systems**



Technical Specifications

Model	DC PRO 36
Power Supply	24V DC, 100/240V AC, 50/60Hz
Motor	Brushless DC Servo
Motor Voltage	24V DC
Temperature	-45℃~+65℃
Boom Length	4M , 6M
Open/Close speed	0.9 sec to 6 sec Adjustable
Enclosure rating	IP55
MTBF	10000000 Operations

Safety & System Support

Anti-Collision	Built-in
Emegency Manual Release	Built-in
Breakaway Boom Arm	Built-in
Vehicle Detector	Supported
ANPR Camera System	Supported
UHF Long-Range Reader	Supported
RFID Reader	Supported
Traffic Light (Red / Green)	Supported

Note: Product design, specifications, and colors are subject to change without prior notice in order to improve quality and performance.

Key features



Auto Reverse

If the boom arm makes contact with a vehicle while closing, it automatically reverses direction to prevent impact



Remote Control

Enables quick and convenient barrier operation via remote control.



Sloping Roof

Engineered to prevent moisture accumulation and protect internal components.



Red and Green LED Strip

Red indicates closed or closing, while green indicates open or opening, providing clear operational indication.



Obstacle Detection

Supports IR sensors and solenoid coil–based detection to prevent arm movement when an obstacle is present.

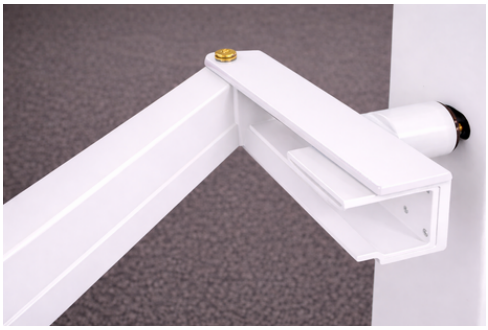

Breakaway Boom Arm

Allows the boom arm to safely swing away on impact to reduce damage.

Note: Product design, specifications, and colors are subject to change without prior notice in order to improve quality and performance.

Section2: Technical Specifications
&
Operation manual

AETS DC PRO 36 BARRIER MANUAL



Model: DC PRO 36

（Take The Object As The Standard）

Disclaimer:
Product design, specifications, and colors are subject to change without prior notice in order to improve quality and performance.

Dear Customer,

Greetings!

Thank you for choosing our company's product. To fully leverage the product's superior performance, please read this manual carefully before use.

This manual includes information on the product's performance advantages, specifications, structural features, control interface instructions, on-site installation and debugging guidance, and the packing list. By reading this manual, you will gain a better understanding of the product's construction characteristics, usage requirements, and precautions, ensuring safe use and extending the barrier's lifespan.

For safe operation, please strictly adhere to the following guidelines:

1. To avoid personal injury, do not open the door or cover while the barrier gate is operates.
2. The barrier gate's housing must be grounded to prevent electrical shock.
3. Do not stand, walk, or place objects under the barrier arm while the barrier gate is in operation.
4. The arm and spring have been pre-matched to a balanced state before leaving the factory. To avoid balance issues, do not arbitrarily alter the length or weight of the barrier arm. If you need any changes, please consult the professional.

Also, we have provided detailed descriptions of potential issues that may arise during installation and use, looked over the causes, and offered corresponding solutions to help you address the problems you've encountered.

This manual is protected by copyright and may not be copied, cut, or modified without permission. We reserve the right to enforce the contents of the manual and will not provide further notice. We also welcome your valuable suggestions during use, and we are committed to providing you with professional and comprehensive service.

Once again, thank you for choosing our meticulously manufactured product. We look forward to having more opportunities to serve you in the future!

Catalog

1. Product Performance 4

1. Features 4

2. Technical Specifications 5

3. Safety Features 5

2. Product Dimensions, Structure, and Wiring Instructions 6

1. Specifications and Dimensions 6

2. Product Dimensions 6

3. Internal Structure of the Barrier Gate 7

4. Motor Structure 8

5. Wiring Diagram 9

3. Installation Instructions 10

1. Barrier Housing Installation 10

2. Barrier Arm Installation 11

3. Debugging 12

4. Calibrating the Barrier Arm Position 12

5. Spring Installation, Removal, and Tension Adjustment 13

6. Balance Spring Selection Table 14

4. Channel Change Barrier Gate Control Board Button Descriptions 15

1. Mainboard Button Descriptions 1

2. Function and Parameter Table 16

5. Error Codes 20

1. Learning Mode 20

2. Operation Speed Reference Table 22

6. Service Terms 22

7. Product Maintenance and Warranty 23

8. Packing List 23

9. Appendix 24

10. Left and Right Installation Definition 25

1. Product Performance

Our 2nd generation servo barrier gate using internationally leading integrated design and mold-based manufacturing technology. It features a compact structure, high precision, and high consistency in standardization. The system uses a planetary gearbox for transmission, offering high efficiency, long lifespan, no oil leakage, no blockages, and low noise. The motor is a 24V permanent magnet rare-earth synchronous servo motor, which is small in size, low in power consumption, provides high torque, wide speed adjustment range, generates little heat, and offers precise positioning. The system uses a Digital Signal Processor (DSP) as the control core, enabling the implementation of more complex algorithms, networked, and intelligent functions. The internal Integrated Power Module (IPM) detects faults and displays error codes for quick troubleshooting. The barrier gate features a three-link design for smoother and faster operation. It is equipped with a solar charging application, making it ideal for use in locations without grid power, such as railway crossings, fire lanes, fuel stations, and mine entrances, fully automating control operations.

1、Features

1) Operation speed can be adjusted.
2) Slow up and slow down can be adjusted.
3) The limit angle can be adjusted.
4) The arm direction can be quickly interchanged.
5) The barrier arm can be manually operated in case of power failure.
6) 418 frequency learning code anti-copy remote controller.
7) Infrared photocell sensor IO signal input function.
8) Loop detector and radar IO signal anti-collision signal input function.
9) Up, down and stop IO signal input function.
10) Counting (fleet) function.
11) LED light IO output function.
12) Traffic light IO signal output function.
13) Up and down in place, normally open and normally closed signal output function.
14) RS485 communication output function
15) Delay arm drop function.
16) Arm auto-reverse function.
17) Automatic lifting function when power is off(requires additional power storage module).
18) IO port single-key cycle up and down function.
19) Loop detector normally open and normally closed function.
20) One car and one arm to prevent toll evasion function.

21) Collision warning function (requires additional fee for installing th ors) (optional).
22) The IO port closes the signal input function.
23) Fire linkage signal input function.
24) 24V storage battery input function.

2. Technical Specifications

1. Operating temperature: -35°C to +65°C
2. Rated voltage: DC24V/AC110V/220V 50/60Hz
3. Operating speed: 0.9 s to 8 s (adjustable)
4. Rated power: 200W
5. No-load speed: 3000r/min
6. Relative humidity: ≤90%
7. Remote control range: ≤100 meters (clear, sunny weather)
8. Protection level: IP54
9. Maximum arm length: 3-6m
10. Barrier gate dimensions: 298mm*340mm*928mm
11. Drive Method: Servo Motor

3. Safety Features

1. Obstacle Rebound: During the descent of the barrier arm, if it encounters an obstruction or external force, it will automatically rise to prevent damage caused by accidental contact.
2. Anti-Smashing with Ground Sensor: During the descent of the barrier arm, if a ground sensor signal is detected, the arm will automatically rise. The barrier arm will not descend while the sensor is triggered, and it will resume lowering only after the sensor signal is cleared, ensuring safety.
3. Ground Sensor Priority Design: During the descent of the barrier arm, in case of an emergency, regardless of whether the barrier is opening or closing, if a ground sensor signal is detected, the barrier will execute an opening action and anti-smashing response.
4. Anti-Smashing Rubber Strip and High-Density Foam Arm: These features help reduce the risk of injury caused by accidental contact.
5. Raise-Arm Priority Design: When the barrier is in the process of lowering and receives a command to raise the arm, it will respond immediately. Conversely, when the barrier is raising the arm and receives a command to lower it, the system will not respond, ensuring operational safety.

2. Product Dimensions, Structure, and Wiring Instructions

1. Specifications and Dimensions

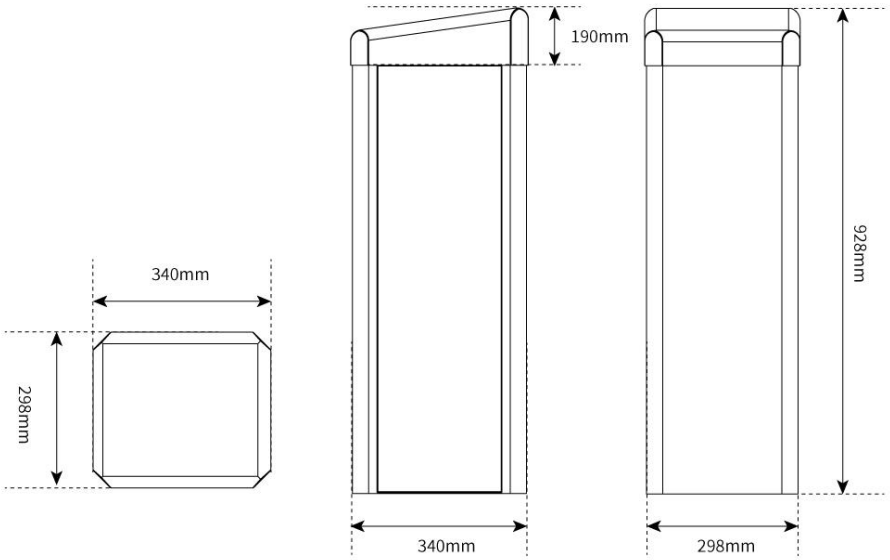

2. Product Dimensions

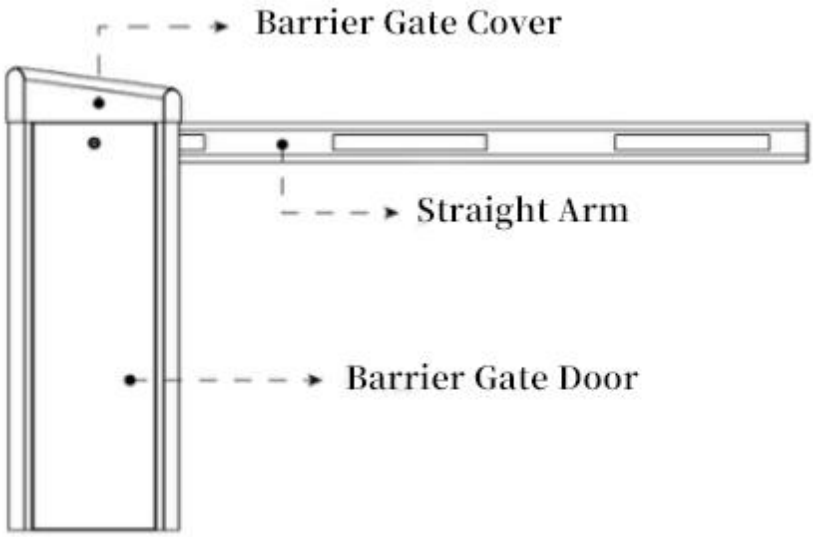

3. Internal Structure of the Barrier Gate

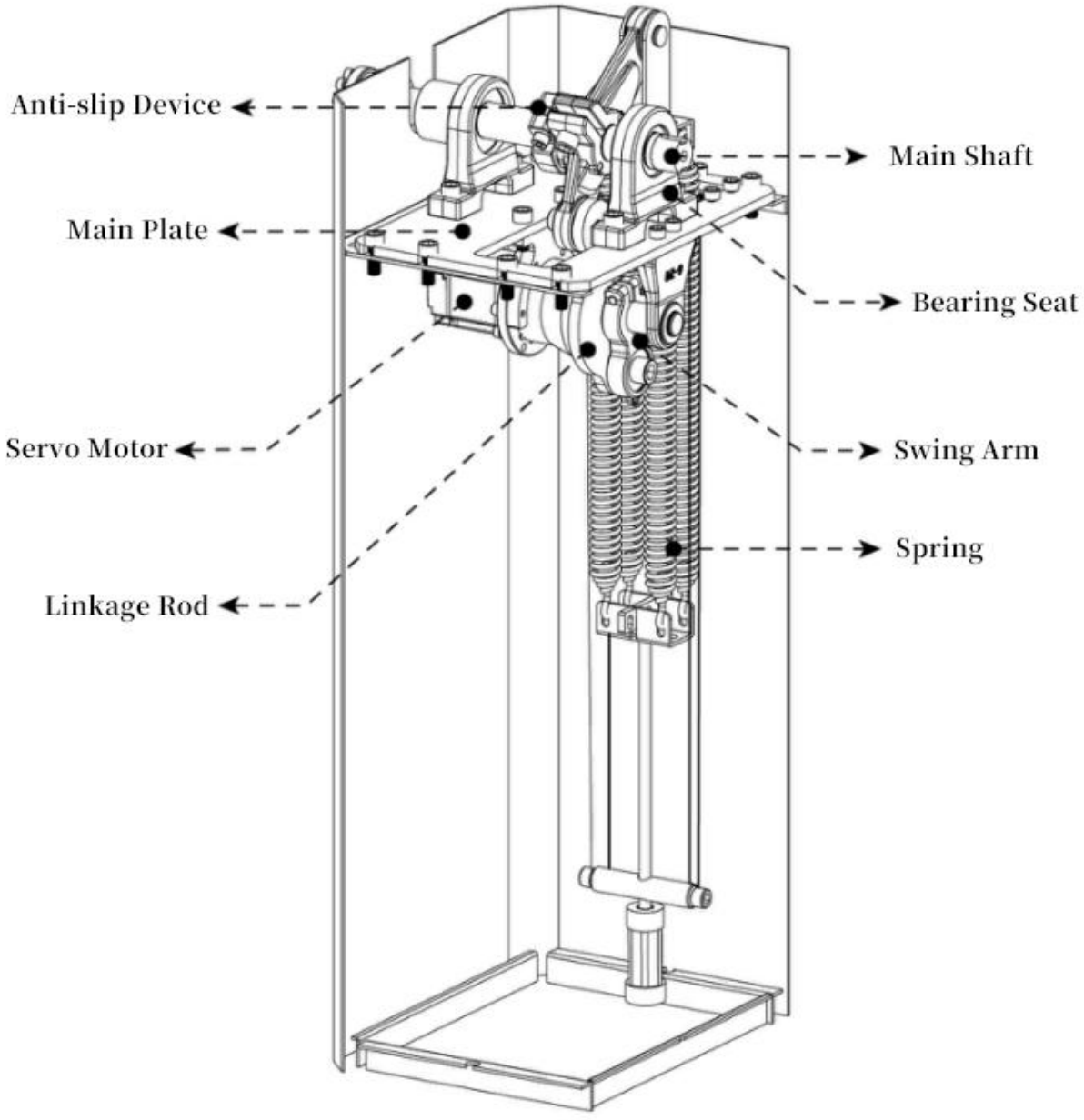

4. Motor Structure

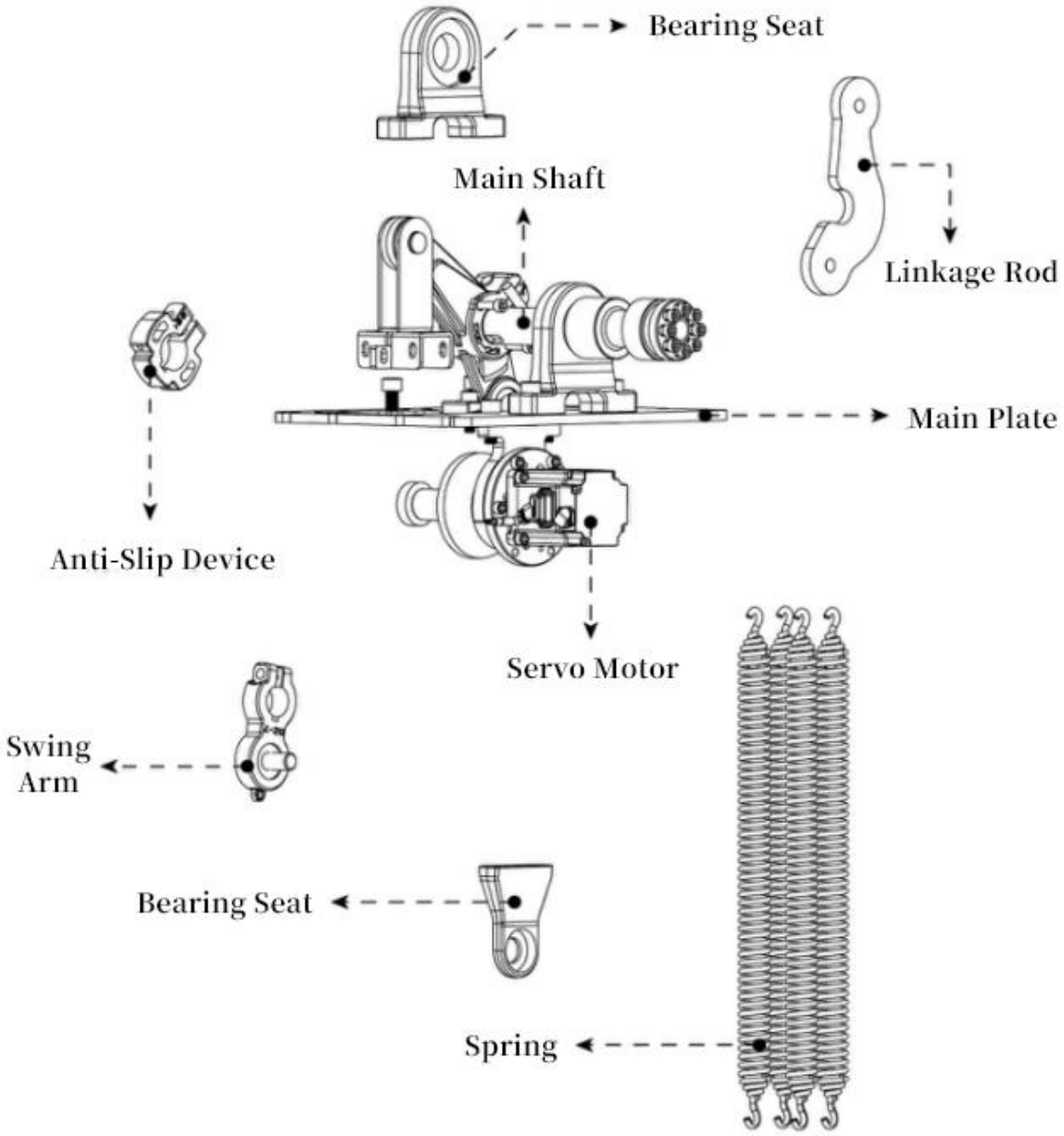

5. Wiring Diagram

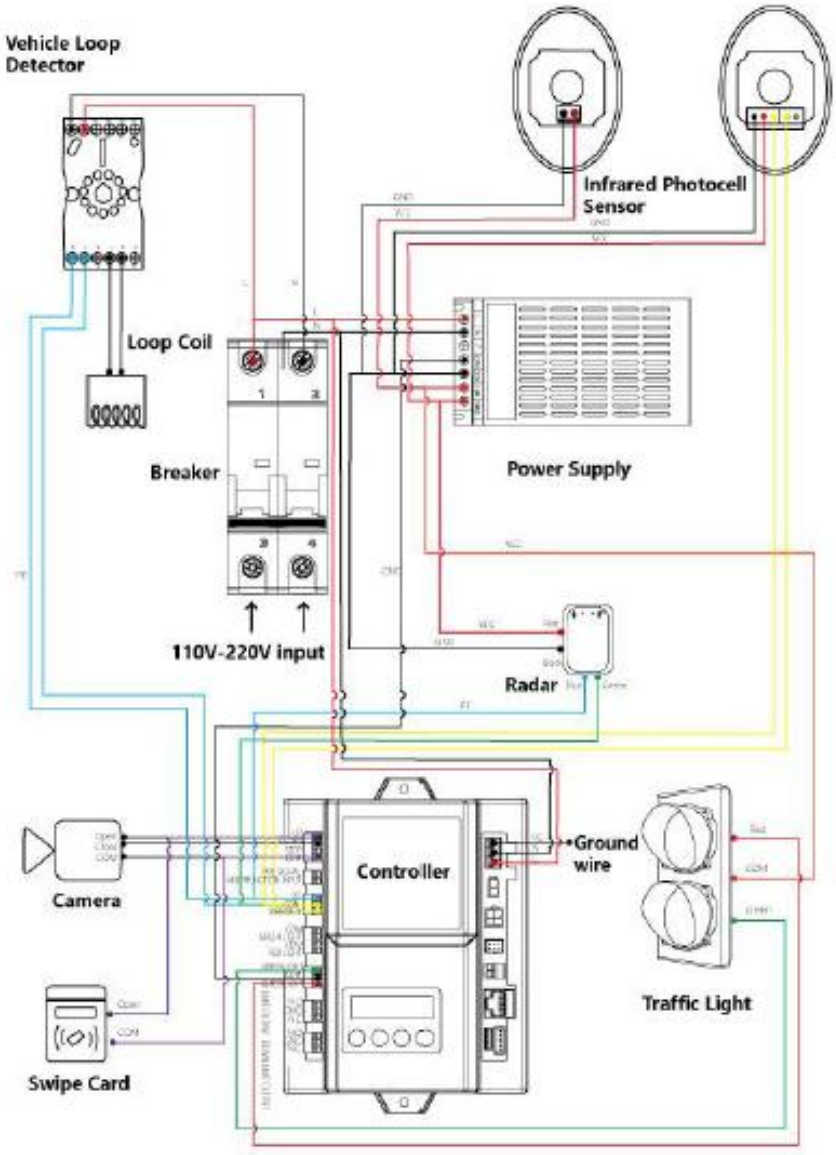

Friendly Reminder:

The anti-collision port serves to raise the barrier arm when triggered, and the arm will not fall after the vehicle passes.

The ground sensor port ensures that the barrier arm does not fall when triggered, and the arm will automatically fall after the vehicle has passed and the signal disappears.

External 12V power supply devices (such as radar or infrared sensors) should not be directly powered from this controller, as it may cause abnormal rising and lowering issues, and damage resulting from such issues will not be covered under warranty.

3. Installation Instructions

1. Barrier Housing Installation

1) Pouring the Base:
Determine the desired position for the barrier gate and pour a concrete base. The base dimensions should be approximately 150mm larger than the dimensions of the barrier gate, the thickness about 200mm.

2) Securing the Barrier Gate:
Drill holes at the predetermined positions and insert expansion bolts (M12*150). Place the control box in position and secure it firmly.

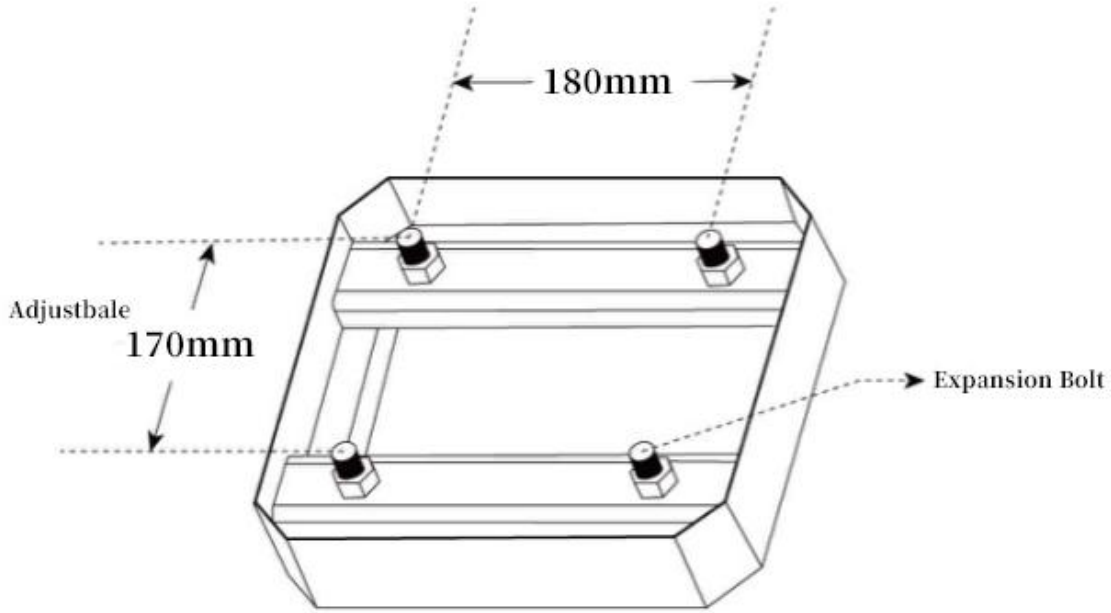

Dimension diagram of the cabinet base plate

2. Barrier Arm Installation

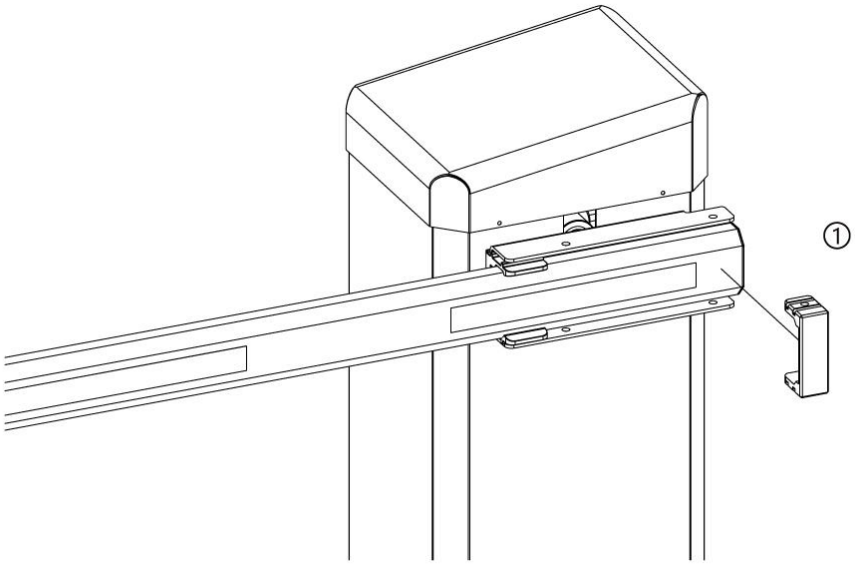

1) First, align the hole of the barrier arm with the head of the arm, and then insert the head pressure strip to secure it in place.

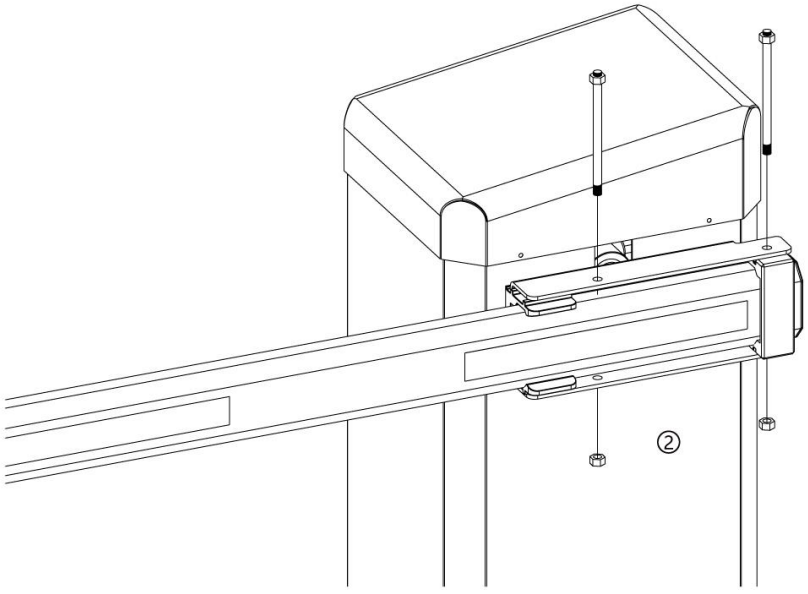

2) Then, pass through and tighten this metal anti-tamper screw (Note: This metal anti-tamper screw does not require the installation of a fixing washer).

3. Debugging

After the complete assembly of the barrier gate, check that all components are properly aligned and securely fitted. Use the handwheel at the rear of the motor to perform a test UP and DOWN of the barrier arm. After confirming that everything is correct, power on for testing and adjust the barrier arm to ensure it is level.

4. Calibrate the Barrier Arm Position

To calibrate the barrier arm position (for example, after excessive force has been applied), follow these steps:

1) Open the barrier housing and remove the cover.

2) Use an M12 internal hex wrench to loosen one fastening screw of the DZ-23 on the swing arm shaft, along with the three M8 screws of the anti-slip device, so that the barrier arm can be re-positioned manually.

3) Adjust the position of the barrier arm (level position, as shown in the diagram below).

4) Use the Allen wrench to tighten the two fastening screws again.

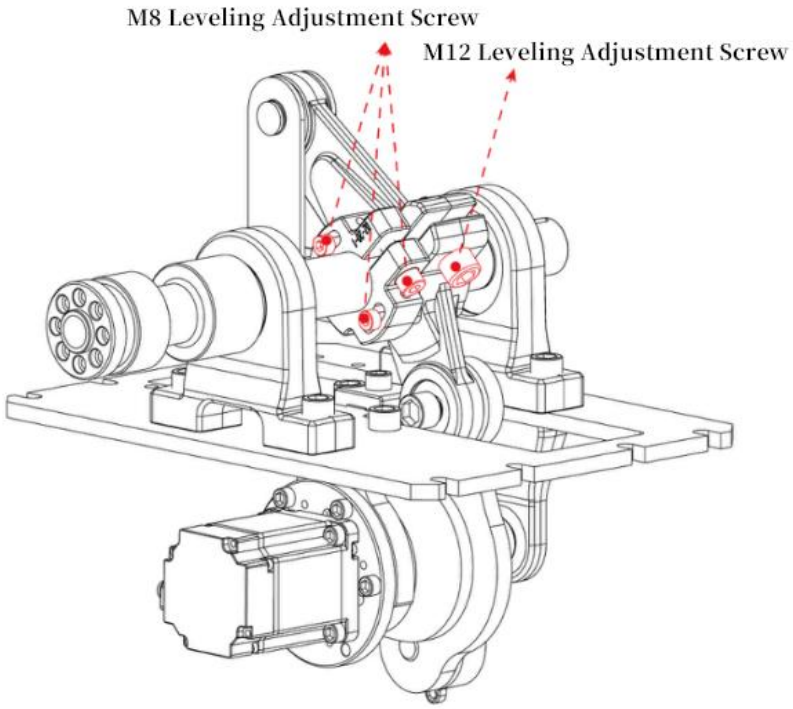

5. Spring Installation, Removal, and Tension Adjustment

To remove the spring, follow these steps with the barrier arm in the 90° open position:
1) Loosen the spring adjustment handle by turning it counterclockwise by hand, which will allow the spring to be easily removed.
2) Adjust Spring Tension:
To increase the spring tension, rotate the spring adjustment handle clockwise.
To decrease the spring tension, rotate the spring adjustment handle counterclockwise.

Using this feature allows fine-tuning of the tension balance between the barrier arm and the motor. Adjust as needed to achieve precise tension balance, which can effectively reduce motor load and extend service life.

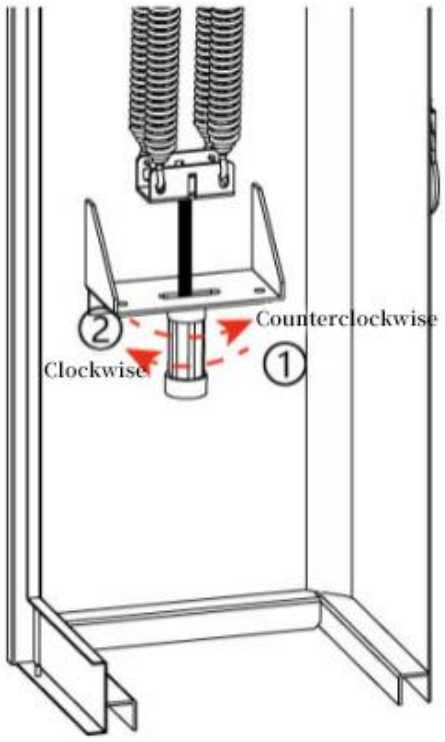

1. Tighten in clockwise direction.
2. Loosen in counterclockwise direction.

6. Balance Spring Selection Table

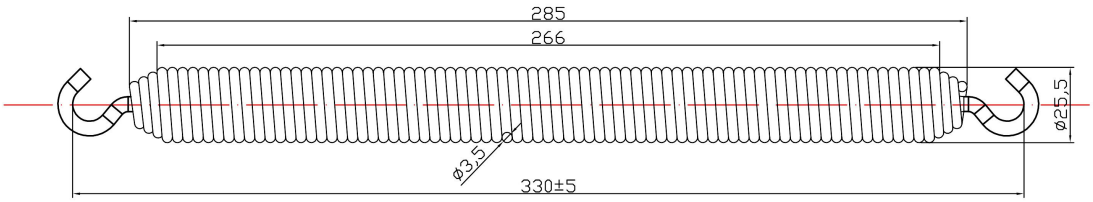

Arm Type	Arm Length		spring specifications and dimensions	
			Type	330×25.5×3.5
100*45 Straight Arm	6米		Tension Spring	1+1+1+1
	5米			1+1
	4.5米			1+1
	4米			1+1
	3.5米			1
	3米			1
80*45 Straight Arm	6米			1+1+1
	5米			1+1
	4.5米			1+1
	4米			1
	3.5米			1
	3米			1
Two Fence Arm	4.5米			1+1+1+1
	4米			1+1+1
	3.5米			1+1
	3米			1+1
90° Folding Arm	5米			1+1+1
	4.5米			1+1+1
	4米			1+1
	3.5米			1+1
	3米			1+1
Three Fence Arm	4.5米			1+1+1+1+1
	4米			1+1+1+1
	3.5米			1+1+1
	3米			1+1

(This parameter is based on the barrier arm produced by our company.)

4. Channel Change Barrier Gate Control Board Button Descriptions

1. Main-board Button Descriptions

The main-board buttons are located on the front of the control box and consist of 4 buttons, as shown in the diagram below.

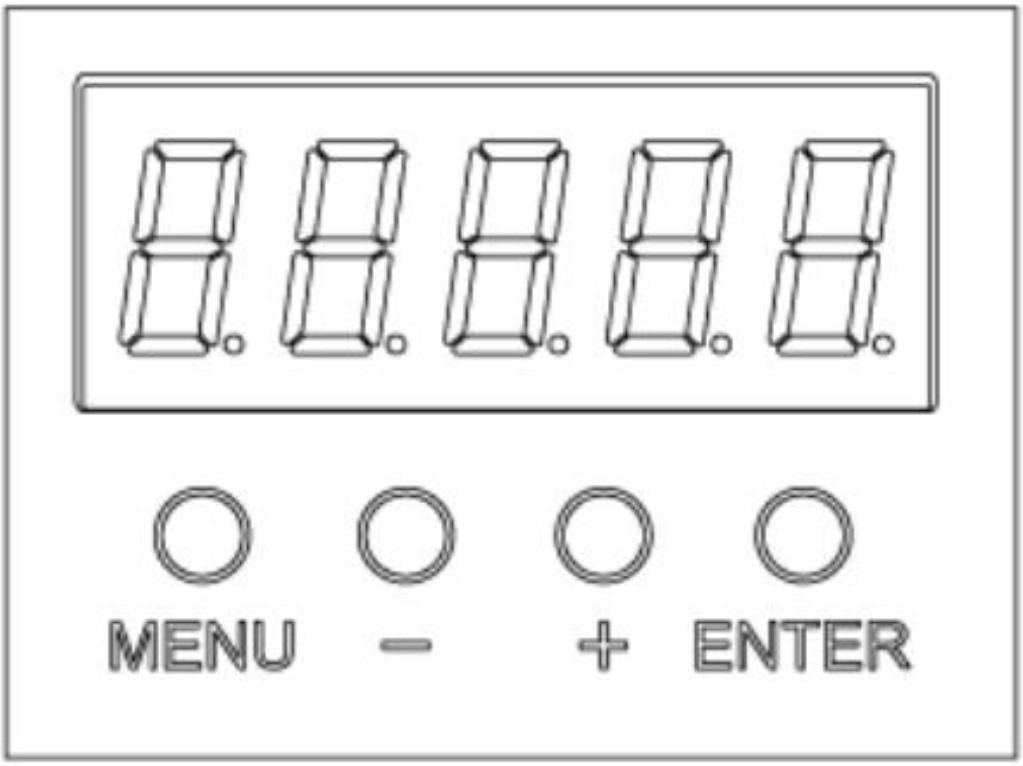

1、Digital Display: 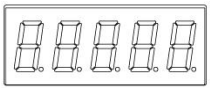
2、MENU: Menu.
3、The "-" and "+" buttons are used for paging up and down.
4、ENTER: Confirm.

2. Function and Parameter Table

No.	Parameter Name	Parameter	Default Value	Note
H00-00	Maximum arm opening speed	10-100	25	The larger the number, the faster the speed. Percentage; The motor's default maximum speed is 2000 RPM.
H00-01	Maximum arm closing speed	10-100	25	The larger the number, the faster the speed. Percentage; The motor's default maximum speed is 2000 RPM.
H00-02	Minimum arm opening speed	5-40	5	Percentage; The motor's default maximum speed is 2000 RPM.
H00-03	Minimum arm closing speed	5-40	5	Percentage; The motor's default maximum speed is 2000 RPM.
H00-04	Arm opening deceleration angle	50-420	20.0	The smaller the parameter, the faster the speed; 50 represents 5.0 degrees.
H00-05	Arm closing deceleration angle	50-420	20.0	The smaller the parameter, the faster the speed; 50 represents 5.0 degrees.
H00-06	Open accelerate adjustment	1-10	1	The step size is 1. The larger the parameter, the slower the acceleration time.
H00-07	Close accelerate adjustment	1-10	1	The step size is 1. The larger the parameter, the slower the acceleration time.
H00-08	Open in place angle	5-350	1.0	10 represents 1.0 degree. (If the limit angle is greater than 10.5 degrees, it enters single-sided self-check mode.)
H00-09	Close in place angle	5-350	1.0	10 represents 1.0 degree.
H00-10		10-50		
H00-11	Delay closing adjustment	0-2	0	
H00-12	Startup self-check speed	5-30	30	
H00-13	Startup self-check torque	30-80	50	When powered by a battery, the self-check torque should not exceed 50%. A value that is too low may cause a self-check error.
H00-14	Obstacle detection speed	5-30		Speed when encountering an obstacle or when the arm is lowered and then raised again
H00-15	Arm closing and raising curve	1-10	1	Sensitivity during arm closing and subsequent raising
H00-16	Left and right direction settings	1-32	0	0: Left; 1: Right It will not revert to factory settings and needs to be set manually.
H00-17	Obstacle return force	7-11	8	Unit: A
H00-18	SET key setting	0-2	0	0: No function 1: Reinitialize self-check 2: Simulate arm opening and closing
H00-19	Self-check mode	0-5	0	0: No self-check on power-up 1: Self-check on power-up 2: Remote control for arm opening, remote control for closing to complete self-check 3: Remote control self-check 4: Port or remote control self-check 5: Port arm opening, closing to complete self-check
H00-20	Monitoring parameter setting index	0-15	7	Used to display the contents of the monitoring parameter table.
H00-21	Restore to factory settings	0-3	0	1: Restore to factory settings; 2: Clear accumulated times; 3: Clear accumulated times and restore factory settings, return to 0 after execution.

H00-22	LED light output mode	0-1	0	0: Disable alternating flashing during operation 1: Allow flashing 2: Green light when the arm is at 45 degrees 3: Turn green after arm lifting 4: Output during arm lifting and lowering 5: Output when the arm reaches the position
H00-23	Multi-functional output port	0-5	0	0: Alarm port closed 1: Relay allows output (arm off alarm output) 2: LED port output (LED light function off) 3: Arm at position output, fault input invalid 4: Position reached output 5: Arm off reminder
H00-24	Buzzer control	0-1	0	0: Output disabled 1: Output enabled
H00-25	Camera timer reset time (S)	1-20	10S	
H00-26	Camera counting time setting	0-1	0	0: No effect 1: Reset timer 2: Timer starts when arm lowers
H00-27	Automatic testing mode	0-3		0: Invalid 1: Power-off restart invalid 2: Restart valid 3: Multi-angle testing
H00-28	Peak mode	0-1		0: Invalid 1: Valid (press UP key for 10 seconds) 3: Takes effect immediately 4: Disable ground sensing
H00-29		0-1		
H00-30	Energy-saving mode	0-3		0: No energy-saving 1: When the voltage is below 23V, turn off LED output, disable arm lowering, and if in lowering state, automatically lift the arm 2: When the voltage is below 23V, turn off LED output, disable arm lifting 3: When the voltage is below 23V, turn off LED output, allow arm lifting and lowering (When the setting is active, charging voltage is 26V, battery is 24V 6A, and when the voltage drops below 23V, arm lowering speed is automatically limited to a maximum of 30%)
H00-31	Slave address	1-32		Machine number 1 to 32
H00-32	Communication baud rate	0-2		0: 9600 1: 19200 2: 38400 The parameter change takes effect after power cycle.
H00-33				
H00-34	Boom parameters	0-7	5	0: 2.5 meter straight arm 1: 3 meter straight arm 2: 3 meter straight arm (1.8S) 3: 4.5 meter straight arm 4: 5 meter straight boom 5: 6 meter straight arm 6: 4.5 meter two-bar arm 7: 4 meter three-bar arm (00, 01, 04, 05, 06, 07, 14, 15, 17) will restore to factory settings based on the selected boom parameters.

H00-35	Relay output	0-3	0	0: Boom at position 1: Boom lowered at position 2: Boom lifting and lowering at position 3: Fault output
H00-36	Software version number			
H00-37	Access password	0-65535		Enter 1155 to limit the maximum speed; enter 1166 to stop operation after the boom reaches the position 20,000 times; The displayed value ^4321; remove the restriction
H00-38	Permission settings	2		Setting 1: Speed limit Setting 2: Count limit Other settings: No limit; Maximum limit: 60% Cannot restore to factory settings.
H00-39	Position loop KP	1000	1000	
H00-40	Position loop KI	0	0	
H00-41	Speed loop KP	100	100	
H00-42	Speed loop KI	300	300	4-pole default is 200, 5-pole default is 600.
H00-43	D-axis KP	300	300	
H00-44	D-axis KI	3000	3000	
H00-45	Q-axis KP	300	300	
H00-46	Q-axis KI	3000	3000	
H00-47	One car one arm mode	0-1	0	0: Invalid 1: Valid When the one car one boom function is enabled, the boom lifting is ineffective during the lowering process.
H00-48				
H00-71	Count input source selection	0	0	0: Use dedicated counting port 1: Share a port with the boom lifting port, allowing counting during self-check 2: Enable fire port, ground sensing signal invalid
H00-72	Ground sensing turn-off switch	0	0	0: Can turn off 1: Ground sensing turn-off is invalid when lifting the boom; ground sensing will function normally when lowering the boom
H00-73	Ground sensing type	0-1	0	0: Normally open, effective when ground sensing is connected 1: Normally closed, effective when ground sensing signal is released
H00-74	Motor power selection	0-1	0	0: 250W motor 1: 400W motor
H00-81	Motor pole number		4	4: 4-pole motor 5: 5-pole motor, manual setting required
H00-89	Maximum self-check cycles		30	Overweight boom set to 150
H00-96	Power-off detection voltage		13.0	Alarm when voltage is below this value

Monitoring Parameter Table

	0	Operating speed	0~2500		
	1	Motor Feedback Angle	0~90 degree		
	2	bus voltage（V）	0~40.0		Make sure that the power supply voltage is greater than 22.0V at any time. Otherwise, an undervoltage fault will be reported.
	3	Output current	0-10.0A		
	4	Hall state	0~7		
	5	Commutation count			
	6	Encoder position deviation	0-65535		
	7	operation time(ms)	0~9000		
	8	Cumulative number of operation	0`99999999		When displaying 32 digits, if it exceeds the maximum number of digits that can be displayed currently, you can use the UP key to scroll up and down.
	9	Number of automatic operation	0~99999999		
	10	Anti-collision times	0~99999999		
	11	Downswing times	0~99999999		
	12	Power-on time (minutes)	0~99999999		
	13	Power on times	0~99999999		
	14	Operating status	Binary Display		
	15	Error Code	0~7		1: Hall sensor fault 2: Under-voltage (below 22.0V) 3: Over-current protection 4: Stall protection 5: Origin error 6: Internal fault 7: Over-temperature protection 8: Over-voltage fault
	16	Input port status Infrared			
	26	counting value			
	27	Input count			Input-only mode
	28	Real-time counting value			When the boom lifting count function is enabled, it combines the count of vehicles passed with the real-time value.

5. Error Codes

EFF-01: Hall Fault	Check the motor or wiring.	This is usually due to the motor or motor wiring not being properly connected.
EFF-02: Undervoltage Fault	Voltage is below 22.0V.	This could be due to insufficient voltage from the power supply or battery.
EFF-03: Overcurrent Protection	Heavy load or damaged driver board, incorrect motor wiring.	Check if the motor wiring is properly connected and replace the driver or adjust the load.
EFF-04: Stall Protection	The limit has not been reached after 5 continuous attempts.	Reset the limit points or check if there is an issue with the limit device.
05: Thermal protection 06: Overvoltage fault		Overvoltage will only be reported when the 24V voltage is too high or the resistor is working continuously, and the overheat protection of the MOS tube.

1. Learning Mode

Our company's remote control utilizes the IC with a special learning code and operates at a 418MHz wireless frequency, offering strong anti-interference capabilities and a long range. In clear weather and open areas, the remote control can reach distances of over 100 meters. It is user-friendly and durable.

The learning code remote control receiver can store up to 16 different codes, and there is no limit to the number of remotes using the same code. To program the remote, power on the external receiver for 5 seconds and simultaneously press the up and down buttons on the remote to complete the learning process. If the learning is not successful, turn off the power and try again.

For re-learning, open the external receiver's cover. On the circuit board, there is a white button. Press and hold this button for 15 seconds to delete the stored remote codes, then proceed with the learning process again. You can also perform the learning process directly using the white button.

1、First

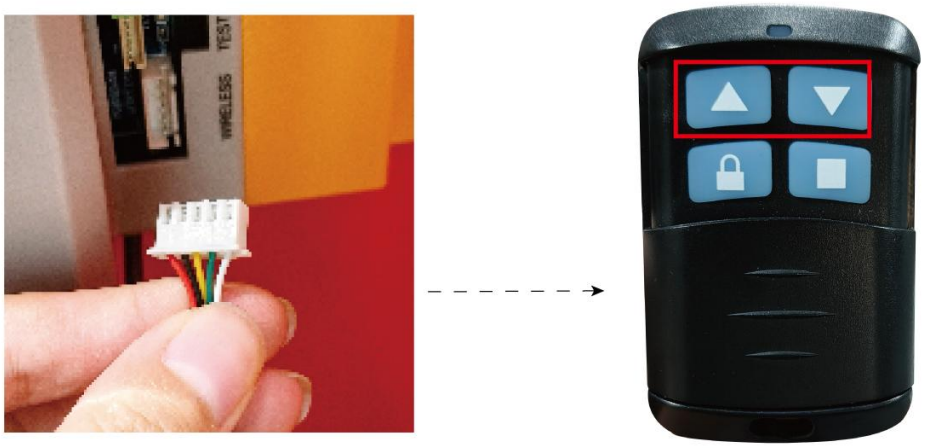

1. Unplug the receiver cable port on the controller.

2. Then press and hold the up/down button of the remote control, and plug the unplugged data cable port back in. After 5 seconds, you can release the remote control. The learning is now complete.

3. At this time, use the remote control that has been learned to try to remotely control the barrier gate to see if it works.

4. If it doesn't work, repeat steps "1" and "2".

2、Second

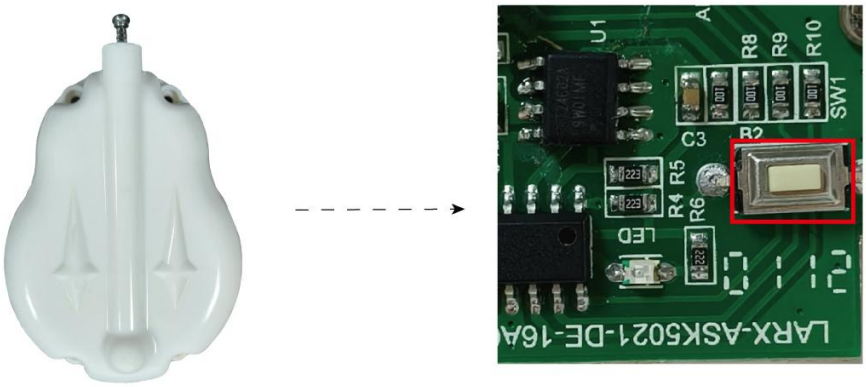

1. If repeat the learning, need to disassemble the external receiving shell.

2. There is a white button on the circuit board. Press and hold it for 15 seconds to delete the previous remote control code and then continue learning.

2. Operation Speed Reference Table

Menu Code / Parameters / Arm Length	Arm UP			Arm DOWN		
	H00-00	H00-02	H00-04	H00-01	H00-03	H00-05
Medium Octagonal arm, 3m, 1.5s (without rubber strip)	95	30	8	95	30	8
Medium Octagonal arm, 3m, 1.5s (with rubber strip)	95	25	8	95	25	8
Large Octagonal arm, 3m, 1.5s (without rubber strip)	45	30	10	45	30	10
Large Octagonal arm, 3m, 1.5s (with rubber strip)	35	40	10	35	40	10
3m round arm 1.5s	95	25	8	95	25	8

6. Service

1) 1 Year Free Repair (Excludes barrier arm and remote control)
2) Lifetime Paid Repairs
3) Technical Support

The following conditions are not covered under free repair (or replacement):

1) Damage caused by user failure to install according to the manufacturer's service manual.
2) Damage due to unstable power supply, exceeding the system's specified voltage range, or non-compliance with national electrical safety standards.
3) Damage to the system's appearance due to improper installation or use by the user.
4) Damage caused by natural disasters or other uncontrollable factors.
5) Repairs needed after the warranty period has expired.
6) Services not promised by the manufacturer.

7. Product Maintenance and Warranty

1) Regularly Clean: Frequently clean the surface of the control box to remove dust and debris, keeping the barrier surface clean.
2) Monthly Inspection: Check for any loose or missing fasteners once a month and tighten them as needed.
3) Spring Balance Check: After 30,000 operations, inspect the spring balance and readjust as necessary.
4) Semi-Annual Inspection: Have a professional check the wear on easily worn parts every six months and replace any worn components promptly.
5) Remote Control Range Issues: If the remote control distance is too short, check if the receiver is shielded by metal objects or if the battery is low. Note that remote control distance can be significantly affected by weather conditions such as rain, fog, wind, and snow, which is normal.

8. Packing List

Name	Specification	Qty	Unit	Note
Screws, Nuts, and Flat Washers	M8*85	2	Set	Secure the Barrier Arm
Barrier mounting batten		2	Piece	Secure the Barrier Housing
Expansion bolt	M12*150	4	Unit	Secure the Barrier Housing
Case Key		2	Unit	
Remote controller		2	Unit	

9. Appendix

Infrared Emitter for Collision Prevention Installation

The installation of the infrared emitter for collision prevention is shown in the diagram below

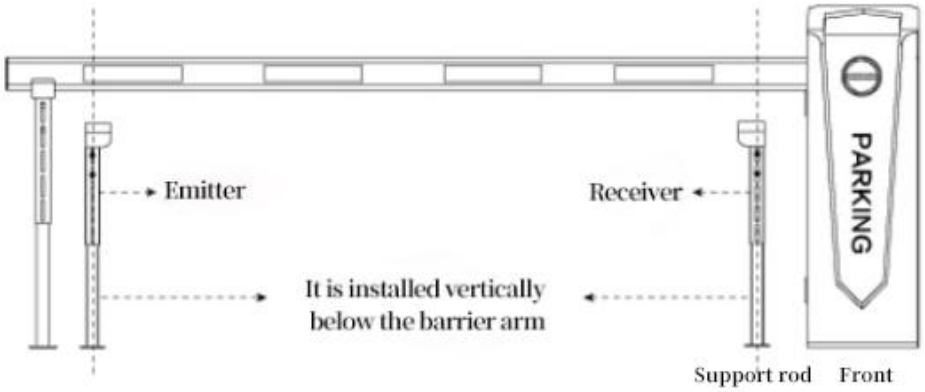

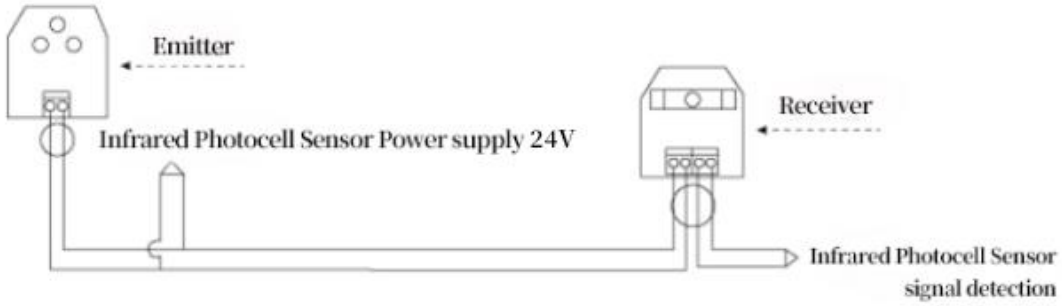

(Infrared Photocell Sensor Installation)

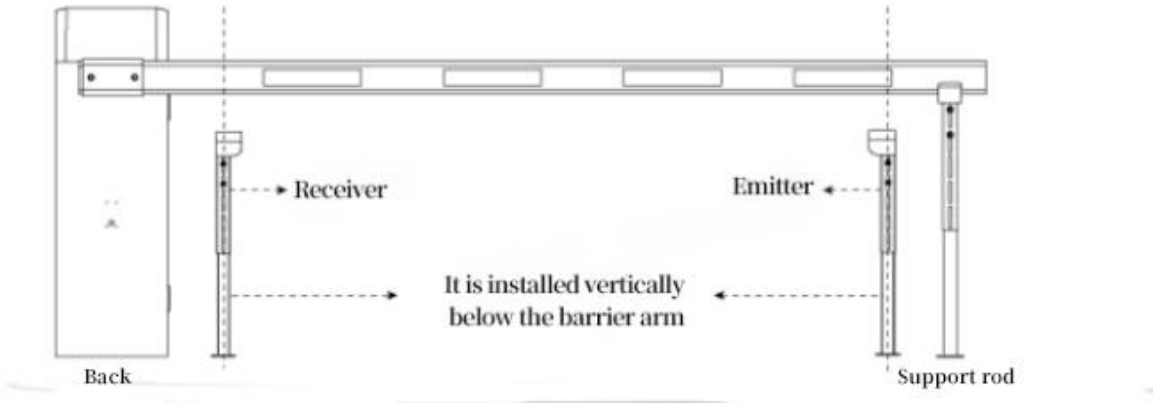

10. Left and Right Installation Definition



Disclaimer:
Product design, specifications, and colors are subject to change without prior notice in order to improve quality and performance.

Section3: Method Statement

Method Statement
For
AETS GATE BARRIER

Contents:

1. Installer Warning
2. Product Model & Series
3. Scope of work
4. Required Tools
5. Manpower
6. Health & Safety
7. Reminder
8. Environment Protection
9. Concrete Foundation Making (CIVIL WORK)
10. Testing & Commissioning

1. Installer Warning:

- Important Safety instruction. Carefully read and comply with all the warnings and instructions that come with the product as incorrect installation can cause serious injury to people and animals and damage the property. The warning and instructions give important information regarding safety, installation use and maintenance.
  Keep hold on instructions so that you can attach them to the technical file and keep them handy in future reference.

Copyright to AETS

2. Product Model & Series:

- AETS DC Series
- AETS DC PRO Series
- AETS DC ECO Series

3. Scope:

- This procedure outlines the methods to be followed with Safety instructions for the installation of Electromechanical Barrier.

4. Required Tools:

- Set of Wrench open/ close (mm)
- Set of Allen screw driver (mm)
- Set of Automatic spanner (mm)
- Set of Screw driver
- Cutter /Pliers & Nose Pliers
- Liquid level
- Power Drill Machine with set of drill bit
- Power extension cord
- Electrical / Insulation tape
- Grinder
- Hacksaw set
- Ball Hammer
- Digital / Analog Multi meter
- Measuring tape
- Pull Spring
- Electrical power cord 3core 2.0mm
- Date cable
- Marker
- Silicon

Copyright to AETS

5. Manpower:

- Site Supervisor
- Technician
- Helper Technician

6. Health & Safety:

- Plan of Precaution for the Hygiene and physical safety of worker on the site.
- Site Supervisor must be check and secure the safety measure of work place.
- Site Supervisor must secure all the P.P.E (**Personal Protective Equipment**)
- Site Supervisor must secure the location of all tools should be in one place all the time.
- Site Supervisor should inform and submit work permit notice to security in-charge to assist the worker on site.
- Site Supervisor must list the emergency HOT LINE in-case of emergency.

Example: **Personal Protective Equipment (P.P.E)**

1. First Aid Kit (Basic)
2. Helmet / Hard-Hat
3. Hand Gloves
4. Dust Mask respiratory protection
5. Glasses splinter proof (Clear)
6. Safety Shoes
7. Reflective Vets
8. Ear Muff or plug hearing protection
9. Fire Extinguisher (For Electrical)
10. Visible Precaution signage

7. Reminder:

- Before starting the work check all the materials quantity, description before using.
- Keep all the materials in safe area or location.
- Do not open all the materials unless if needed.
- Do not brake of damage the materials box casing.
- Do not install this product in an explosive atmosphere: the presence of flammable of fumes or gas constitutes serious safety hazard.
- Keep the USER'S manual & read the technical specification of the materials to be use.
- Make all the things ready.

Copyright to AETS

8. Environment Protection:

- All Biodegradable & Non Biodegradable Material used on the area must be separated both and kept in one box and sealed it with note or label.
  EXAMPLE: NON BIODEGRADABLE MATERIALS:

1. Polystyrene
2. Plastic cover
3. Used spray can
4. Used cables
5. Used canister silicon glue
6. Used cloth
7. Used grinder blade

- All Material's box/ casing or protection cover must be kept in one place for at least 1 week before disposing.
- For any materials or spare parts foe replacement should be kept in original casing before return to supplier or vendor.
- Any Materials, Parts receive having damages must report immediately to your site Engineer or supervisor to make a corrective action to supplier or vendor.
- Properly dispose of packaging materials such as (plastic, cardboard, polystyrene, plastic cover etc.) in accordance with the provision of the laws in force. **Keep out of reach of children all the time**.
- Apply all signs required by current code for all Hazardous with residual risks and must be visibly identified.

9. Concrete Foundation Making (CIVIL WORK):

- Make or form a wooden box casing for the concrete foundation for Barrier make sure you are using the right PPE while doing this for kind of work
- Excavate 400 to 600mm. depth and put the wooden form box into the pit with rw-bars and check the level. Use PPE like safety shoes and Hand glove and safety goggles while doing this work.
- Lay out all the required for the armored kopex or PVC plastic pipe end to end for all the cables needed for the Barrier and tie up all the pipe using G.I wire to hold during cement pour.
- Put a pulling wire or rope inside of each pipe to secure the cable is free during pulling and make sure that you use hand gloves during pulling to avoid scratch or cut into your hands.
- Cover the cable pipe to avoid possible particles goes inside thar will cause difficulties during pulling.
- Make sure that all armored flexible kopex or the pvc have a extra length going inside the Barrier before cutting the pipe prevention for possible damage of the cables.
- Once the wooden from box was in place start to pour cement and wait until it was permanently dry.

Copyright to AETS

- Make up the Barrier dimension into a piece of cardboard.
- Make up all the 4 hole of the Barrier including the center hole for drilling reference.
- Put the piece of cardboard into the concrete foundation and check the alignment and mark it up with the visible marker.
- Check the size of the drill bit based on the anchor bolts to be use including the depth required to avoid the misfit during fixing.
- Wear safety goggles or spectacle with a clear lens while removing some cement residue to avoid the small particles tick goes into your eyes and make whole surface clean.
- For drilling the concrete foundation use safety again the safety goggles while drilling and use 6mm concrete bit at the start of the hole.
- Once the hole guide was in-place start to use the correct concrete bit and slowly drilled it into 4 nos. marked up hole until reaching the exact depth for the anchor bolt.
- Apply penetrating oil on the thread of the chemical bolts and put cover on the thread for protection.
- Before doing this procedure make sure that you wearing Safety shoes, Hand gloves with a rubber grip during removing the Barrier in the pallet or in the box.
- After removing from the materials in the box make a visual and thorough inspection for the Barrier look if there any dent or damage on the material.
- If the material is in good condition take the supplied key and gently open the front cover of the barrier. Any problem, damage occurs on the materials take a photo as much as possible and inform to your Engineer or superior about the damage.
- WARNING ! Do Not IGNORE or SET ASIDE what you saw or found about the materials damages and handle other wise you will be facing problem later on.
- Lift the Barrier and handle with great care with safety move while doing this kind of work. Always have presence of mind all the time.
- Once the Barrier was in place check the alignment before the 4 nos. of bolt knot including the lock washer.
- Gently open the Barrier front cover and pulled all the lay out wire inside the Barrier.
- Fix ferules or label on each cable to determine the use and application of each wires.
- Fix all the bolt screw and lock washer also check the level and the alignment before tighten all the screws bolt.

NOTE: Method is applicable for all AETS Barriers.

Copyright to AETS

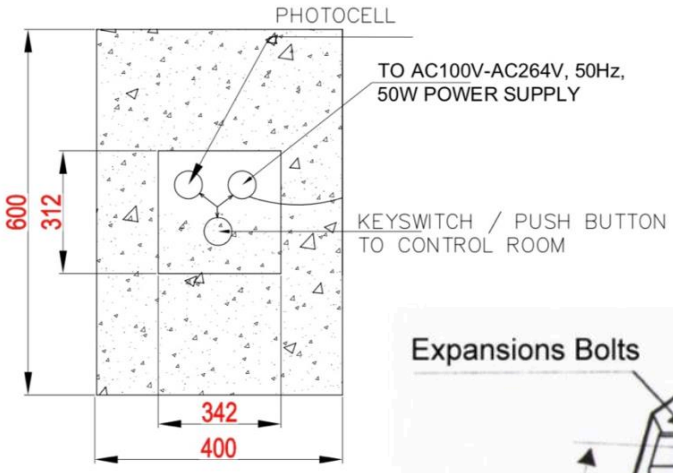

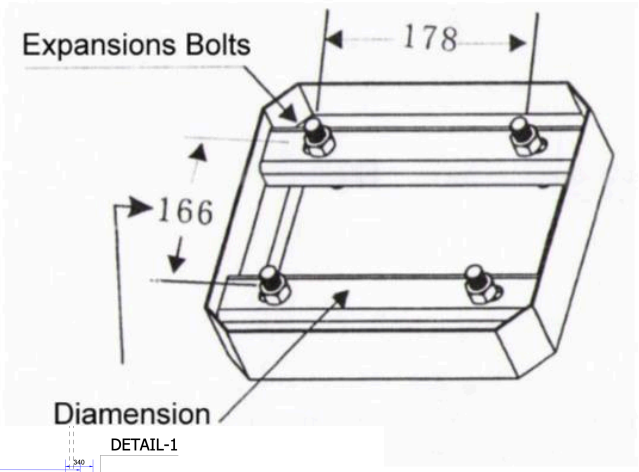

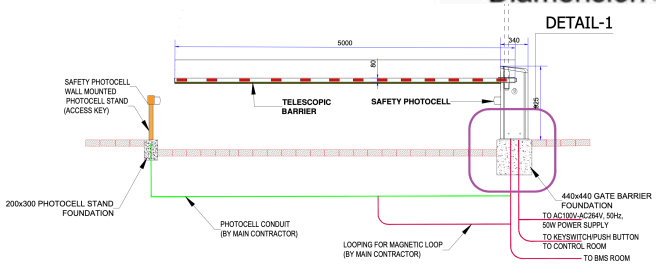

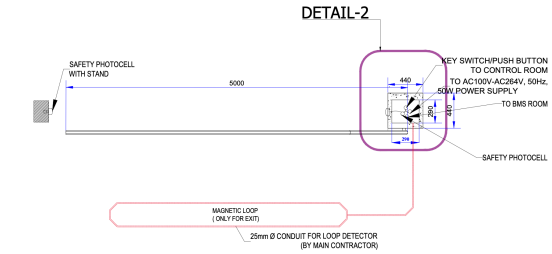

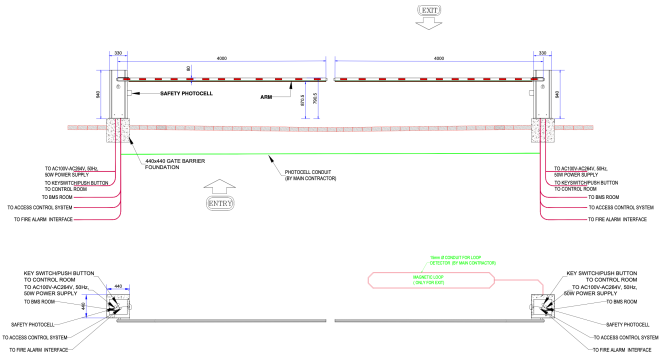

Copyright to AETS

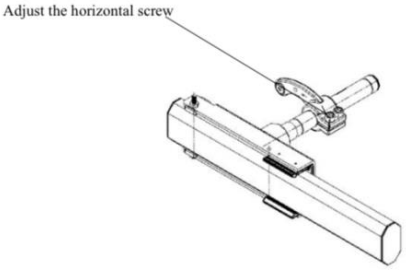

Spring Selection:

Balance spring:

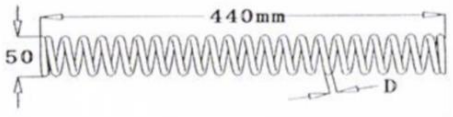

The length of the boom from 5.5 to 6meters has additional instruction for inbuilt spring.

In order to make a safe and steady performance and to decrease the metal fatigue for the balance spring, 3 inbuilt springs covered with PVC pipe are inserted into the 65.mm compressed spring and separated with rubber cushion.

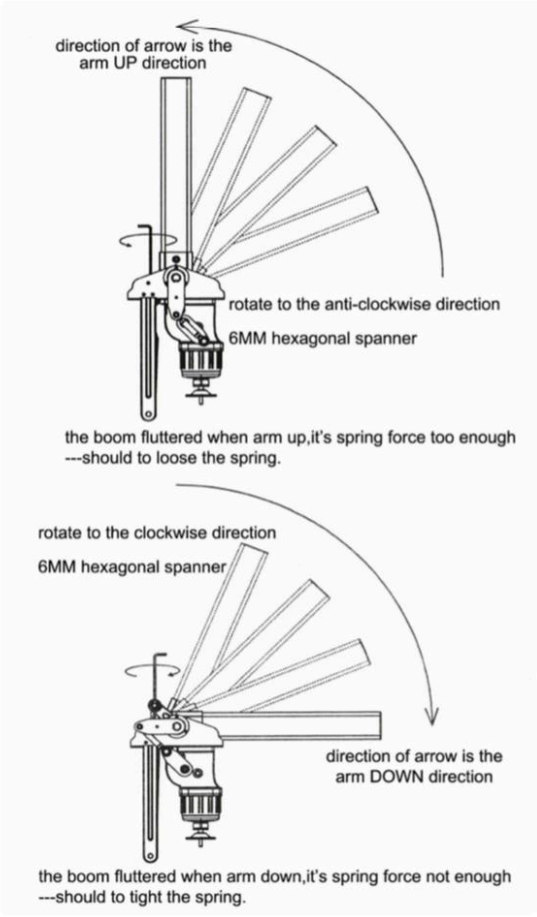

Copyright to AETS

Wiring Termination :

- Only Qualified personnel (professional installer) Should be allowed to access live parts.
- Barrier machine is now ready for wiring termination.
- Before you start to terminate wiring connection check the following cable needed.

1. Date or access cable wire
2. Power cable 2.0mm 3 or 4 core.
3. Safety loop wire for entry & exit point
4. Safety data cable wire for photocell
5. LED light cable wire
6. Access card data cable
7. Extra wire for future plan.

- Check all the continuity of all cable using multi meter to prevent technical problem during wiring connection and pay attention for the following:
- Technician must have a full knowledge in electronic & electrical symbols upon doing the wiring connection.
- Technician must follow the electrical color coding Phasing for the main power supply.
    1. P for Phase for Line in **Brown** or **RED** color
    2. N for Neutral in **Blue** or **Black** color.
    3. E for Earth ground in **Green** & Yellow or Yellow color.
- Once all the cables are in place you may start to terminate the wire according to their usage.
- During wiring termination always wear safety goggles at all time.
- Always pay attention during wiring connection avoid damages or scratch the wire. Always assure that there's no burst or excess wire that will cause a possible short circuit or damaging the mother board specially your safety. AVOID Electric SHOCK!
- Always check the wiring connection before you start up.
- Harness all the cable wires to make the system look clean and presentable avoid loose wire.
- Once all the wire was successfully and properly terminated you may now start to fix cable for the power supply. DO NOT TURN ON !
- Once all the wiring connection are in place and secured you may proceed to work for mechanical part of the Barrier.

Copyright to AETS

10.Testing and Commissioning:

- Once all the method from the very beginning has been successfully followed you may start to turn ON the main power supply.
- Check the mother board and look what is the display on the LED,
- Check if there's any error message on display and you can view the said error on the technical manual provided.
- If everything is correct you may start to give command to Barrier either by push button or remote but before you start make sure that the area is clear and safe. Put temporary signage or rubber cone barrier with reflector sticker or ask to security for assistance to stop any vehicle passing. Observe the movement of the machine while on operation.
- Test and cycle the barrier to determine For error or abnormalities.
- Ask the end user or the client regarding how the Barrier to be operated.
- Give the end user or the client proper procedure what to incase problem occur on the machine.
- Inform the end user or the client about the limit to access the Barrier machine.
- Give the end user or the client basic and simple information about the Barrier machine.
- Inform the end user or the client regarding for the KEY of the Barrier and it should be separate with label.
- Handling document paper and job completion from must denote all the details what has been done and installed on the Barrier.
- Warranty period regarding for the Barrier must be clearly denotes and completely detail on the documents.
- All documents must be signed and accept by all concern personnel for a job completion.
- Once all the documents are completely signed you have to give basic training and explain how to operate with a do's and don't for the Barrier and what to do incase of malfunction occur on the operator.
- Affix vandal proof sticker at the side of operator with complete details and contact information about your company.
- Once the testing and commissioning is done you may now turn over to clint or user along with the necessary supporting documents with full sing of both parties for compilation.
- Always remember AETS are well when it comes in Home & Industrial automation system because our focus in on Quality with a capital Q.

  >>> Thank you for choosing this product. The firm if confident that its performance will meet your expectation and operation needs<<<

THE END.

Copyright to AETS

Section4: WARRANTY CERTIFICATE

ACCESS KEY AUTOMATIC GATES TRADING L.L.C.

DRAFT WARRANTY CERTIFICATE

Customer Name: **M/S. Al Jessour Steel Industries Co LLC**
Project: Construction of Proposed Steel Factory and allied services
Location: Plot no. 5330430, Saih Shuaib 4, Dubai Industrial City (DIC), UAE.
Consultant: M/s. Platinum Home Engineering Consultants
Contractor: M/s. Al Avon Contracting LLC
Product Model: AETS DC PRO Gate Barries
Date of Commissioning & REF**: 10th June 2025, Ref: AK-INV-1234**

1. **Warranty Coverage**

This certificate Warranty that the above-referenced AETS DC PRO Gate Barriers (04) is covered by Access Key LLC's **Comprehensive Three-Year Warranty**, effective from the date of commissioning (10th June 2025).

Covered Components & Services:

- **Mechanical Components:** Gearbox, linkage assemblies
- **Drive System:** DC motor, drive train, coupling
- **Control & Electronics:** Control board, transformer, safety photocells,
- **Service Support:**
  - Complaints will be attended within 24 hours. from the time of received the call or written email during normal working hours,
  - Parts repair or replacement under our scope up to 3 years. Spare parts, if any required do to any accident will be charged at cost prevailing at the time of breakdown.
  - Any visit to repair of gate barrier if due to damage by fire, any accidents, physical damages, natural calamities, mishandling and any third-party servicing will be assessed and charged extra to maintenance rates.
  - In three years If a gate barrier has been damaged due to an accident, must power of the barrier and report the issue to us immediately and all accidental issues with gate barrier must be rectified by us, to ensure proper functionality and adherence to warranty. Damage assessment we will inspect and provide a detailed report of damage caused by the accident. Repair costs A quotation for repair or replacement will be issued for the client or insurance companies

2. **Warranty Period**

- **Start Date:** 10th June 2025
- **End Date:** 09th June 2028

3. **Terms & Exclusions**

Included:
- Defects in materials and workmanship under normal use and service
- Premature component failures

Excluded:
- Damage due to accidents, misuse, negligence, or unauthorized modifications
- Cosmetic damage (scratches, dents) not affecting functionality
- Force majeure events (e.g., natural disasters)

4. **Notification:**
Contact our Service Desk via email support@accesskey.ae or Phone +971 56 560 5959, +971 4 351 5959, 056 649 1999, 050 308 1888, 050 597 1777, 050 870 8759.

M/s. ACCESS KEY AUTOMATIC GATES TRADING L.L.C

Section5: Previous Approvals

Material Submittal(V1.0)

Dec 4, 2021, ID #1583

REPORT DETAILS

Description MAR-187 Rev-01 - AETS DC Pro Barrier

Submitted by DC SCL PG

Status Submitted

Last update Dec 15, 2021 8:42 AM

Last updated by DC PNCA PG

NOTES

B

Version 1.0

PNC investments | PNC architects | SOBHA CONSTRUCTIONS

MATERIAL SUBMITTAL

Project	: One Park Avenue (G+3P+24)		REF. No.	: MAR-OPA-CIVIL-187	
Client	: PNC Investments		Rev. No.	: 01	
Consultant	: PNC Architects		Date	: 06-Dec-21	
Contractor	: Sobha Constructions LLC		Category	: Civil ✔ Arch ☐ ID ☐ MEP ☐	
Subcontractor	: Access Key Automatic Gates Trading LLC		Others	:	

Material Description (one item only on this form)

Material Reference	: MAR-OPA-CIVIL-187	Revision No.	: 01
Description	: Material Submittal for AETS DC Pro Barrier		
Area of Application	: Security Gate		
Drawing Ref	: N/A	B.O.Q Ref. No.	: N/A
Specification Ref	: As Attached	Standards	: Project Specifications

Manufacturer/Supplier

Company Name	: Access Key Automatic Gates Trading LLC
Address	: Dubai, UAE
Local Agent	: Access Key Automatic Gates Trading LLC

Submitted By : Raghav Chetan Position : Project Manager Signature : Date : 06-Dec-21

Consultant's Comments

ARCHITECT "B" Approved As Noted

- Material was approved in previous Revision. Attached Compliance sheet - No objection
- Shop drawings for Engr. Approval
- Arm Length to be verified as per site condition & Shop drawing dimensions.
- Coordinate with other services, disciplines and works related

APPROVAL IS SUBJECTED TO COMPLIANCE WITH COMMENTS INCLUDING PREVIOUS REVISION

ELECTRICAL:

- BMS cables will be provided by BMS-Sub-contractor. However, necessary provisions for BMS monitoring shall be considered by Gate Barrier Supplier.
- Fire alarm cable to be provided by fire alarm contractor and cable pulling by MEP, however, fire alarm connection provision in Gate Barrier Panel to be considered by Gate Barrier Supplier.

THE LENGTH OF THE DROP ARM BARRIER MUST COVER THE FULL DRIVEWAY WIDTH AS PER PARKING LAYOUT

☐ A- Approved ☑ B- Approved As Noted ☐ C- Not Approved (Resubmit) ☐ D- Rejected

Name : AR. SUKUL JAGDEV Position : HEAD- PROJECTS (S) Signature : Date : 14/12

Employer's Comments

☐ A- Approved ☐ B- Approved As Noted ☐ C- Not Approved (Resubmit) ☐ D- Rejected

Name : Position : Signature : Date :

1- Contractor to mark all relevant technical description in the literature.
2- Approval shall not relieve Contractor of his liabilities under the Contract or consititute authorization of any change to contract documents
3- Contractor should certify that the above submited items have been reviewed in details and are correct and in strict conformity with the contract drawings and specifications otherwise stated, also that the material sources indicated above have been reviewed in detail and will be supplied in conformity with the above and delivered same timely.

Material Submittal(V1.0)

May 10, 2022, ID #2017

REPORT DETAILS

Description MAR-201 Rev-00 - AETS DC PRO Gate Barrier

Submitted by DC SCL PG

Status Submitted

Last update Jun 6, 2022 11:37 AM

Last updated by DC PNCA PG

NOTES

B

Version 1.0

PNC investments | PNC architects | SOBHA CONSTRUCTIONS

MATERIAL SUBMITTAL

Project	: Sobha Harland - Creek Vistas Reserve		REF. No.	: MAR-CVR-CIVIL-201	
Client	: Sunflower Investments Ltd		Rev. No.	: 00	
Consultant	: PNC Architects		Date	: 11-05-2022	
Contractor	: Sobha Constructions LLC		Category	: Civil ✔ Arch ✔ ID ☐ MEP ☐	
Subcontractor	: Access Key Automatic Gates Trading LLC		Others	:	

Material Description (one item only on this form)

Material Reference	: MAR-CVR-CIVIL-201	Revision No.	: 00
Description	:AETS DCPRO Gate Barrier		
Area of Application	: Gate Barrier		
Drawing Ref	: N/A	B.O.Q Ref. No.	: N/A
Specification Ref	: N/A	Standards	: Project Specifications

Manufacturer/Supplier

Company Name	: Access Key Automatic Gates Trading LLC
Address	: Dubai, UAE
Local Agent	: Access Key Automatic Gates Trading LLC

Submitted By : Joseph Edwin Position : Project Manager Signature : Date :

Consultant's Comments

ARCHITECT (B)
- Supplier has been used for Sobha Hartland projects, OPA.
- Gate barrier REMOTE CONTROL Sample to be submitted along with TD, shall be Heavy duty.
- Subject to SHOP DRAWING and Details approval - to be submitted
- Method statement (w/ ITP & RA) to be submitted for Engr. Approval
- Coordinate interphasing provision for MEP and Access control
- Comply with project specification, project requirement and authority requirement

Electrical:(B)
1.EMergency manual disconnect switch shall be provided as per the specification.
2.BMS and fire alarm interface to be provided as per the requirement.

☐ A- Approved ☑ B- Approved As Noted ☐ C- Not Approved (Resubmit) ☐ D- Rejected

Name : Bernard Abdon Position : Sr. Site Architect Signature : Date : 28.05.22

Employer's Comments

☐ A- Approved ☐ B- Approved As Noted ☐ C- Not Approved (Resubmit) ☐ D- Rejected

Name : Position : Signature : Date :

1- Contractor to mark all relevant technical description in the literature.
2- Approval shall not relieve Contractor of his liabilities under the Contract or consititute authorization of any change to contract documents
3- Contractor should certify that the above submited items have been reviewed in details and are correct and in strict conformity with the contract drawings and specifications otherwise stated, also that the material sources indicated above have been reviewed in detail and will be supplied in conformity with the above and delivered same timely.

ANNEXURE

PROJECT: R1085-HYATT CENTRIC HOTEL LANDSCAPE WORKS

REFERENCE: ATS-HCH-MAS-R1085-EL-010 Rev-0

SUBJECT: Gate Barrier

STATUS: Approved as Noted **Date: 31-10-2022**

The proposed material "AETS DC PRO" gate barrier is acceptable subject to compliance with the below comments.

1. Supplier shall ensure that the proposed boom is oval type.
2. The RAL color of the cabinet should be as per architectural requirements.
3. Supplier shall provide at least 3 remotes per barrier as agreed by mail on 20th October 2022.
4. Supplier shall ensure that both entry barriers can be opened by a single touch of a remote if required by the operator or authority for smooth entry of vehicles.
5. Supplier shall ensure that entry & exit barriers are suitable for fail-safe or fail-secure operation and are field programmable as per operator requirements.
6. Supplier shall provide provision in the gate barrier control panel for the opening of entry & exit barriers through the remote switch from the Security Control Room at Basement-1.
7. Supplier shall ensure that safety loops and photocells are considered along with an anti-collide system to ensure safety. Also, a breakaway mechanism should be provided.
8. The attached draft warranty is not acceptable. The 5-year warranty shall commence from the TOC and conditions shall not be accepted
9. Supplier shall provide a 5-year AMC contract as agreed vide Tender Quotation AK-QT-004876 dated 11th October 2022.
10. All LED lights must face the underside of the boom and ensure that no lights are directly in the driver's line of sight.
11. Power Supply requirement and isolator location to be coordinated with MEP contractor. Contractor to ensure that the Isolators are hidden.
12. The proposed gate barrier shall be the weatherproof type with IP-55 ingress protection including cable entry knock-out. Provide suitable glands & sealing provisions for knock-outs to ensure IP rating.
13. Supplier shall ensure that the specified batteries are suitable for UAE weather conditions and outdoor use in confined spaces. A proper de-rating factor should be considered in battery calculations.
14. Supplier ensures that the material used for enclosure, boom and all parts of equipments are suitable for UAE weather conditions close to sea area.

Sign / Stamp

AKHILESH DUBEY

P.O.Box: 122751 DUBAI - U.A.E. VX STUDIO CONSULTANCY

P.O BOX 122751, DUBAI | +971 43 70 89 09 | INFO@VEEXPERTS.COM | WWW.VEEXPERTS.COM

Kinnarps Project Solutions L.L.C

P O Box 111727,
Floor 12A,
Damac Business Tower,
Business Bay
Dubai
United Arab Emirates
Phone: +9714 423 8100
Fax: +9714 360 8055

TRN : 100236072300003

PURCHASE ORDER

Date	Page
Sep 02, 2020	1
Purchase Order Number	
PO000050979	

Vendor Address:

Access Key Automatic Gates Trading LLC
Dubai
AE070570000011109558018
UAE, 805740101
UAE

Ship To:

Dubai, United Arab Emirates

Reference	Contact	Vendor Number	PO Date	Terms	Ship Via	Expected Arrival
Facebook	Kinnarps Project Solutions LLC	SA468-AED	Sep 02, 2020	30DAY		

Item Code	Description	Qty	Unit Cost	UOM	Ext. Price -AED
1	Supply & Installation of Parking Barriers (AETS DC)	2.0000	8,400.00	LS	16,800.00

Project #	Project name
DXB202017	Facebook 202017

Comments:
Payment Terms : 50% After Delivery (Payable within 15days from invoice submission), 50% after Work Completion and obtainig Work Completion Certificate from KPS Project Manager(Payable within 30days from invoice submisson)
Delivery : 10-30 days

Subtotal	16,800.00
VAT Amount	840.00
Discount	
Total - AED	17,640.00

Prepared By | **Checked By** | **Approved By**

ACCESS KEY AUTOMATIC GATES TRADING L.L.C.

To,
M/s. KINNARPS PROJECT SOLUTIONS LLC.
P.O.Box: 111727, Dubai, U.A.E
Tel: +971 4 423 8100

Project: Facebook Dubai Headquarter Project

Parking Barrier Technical specifications
&
Operations manual for Parking Barrier.

KINNARPS PROJECT SOLUTIONS
04 JAN 2021
RECEIVED

ACCESS KEY

ACCESS KEY AUTOMATIC GATES TRADING L.L.C.

PREQUALIFICATION & MATERIAL SUBMITTER

FOR

AETS DC PRO BARRIER

Project Details

PROJECT: CONSTRUCTION OF MAIN GATE HOUSE FOR CLIENT 210050.

CLIENT: MR. ENGINEERING OFFICE

CONSULTANT: M/S. ENGINEERING OFFICE

MAIN CONTRACTOR: M/S. GRANS CONTRACTING LLC

MEP CONTRACTOR: M/S. GRANS CONTRACTING LL

From,

M/S. Access Key Automatic Gates Trading LLC
The Kanoon Group BLDG Bur Dubai Office 12
P.O.Box: 127804 Dubai, U.A.E
Tel: +971 4 255 4590, +971 4 351 5959
Email: info@accesskeyllc.com

To,

M/S. Grans Contracting LLC
P.O. Box 66830, Dubai. U.A.E
Tel: +971-04 3986476

FP-2009000120 Sent to Vendor

Description	Revision Count	Tech Submittal ID	Action	Submitted On	Completed On
GATE BARRIER MATERIAL SUBMITTAL	00	500009730	B	02-Nov-22 04:47:17 AM	10-Nov-22 12:43:05 PM

Info | Tasks | Comments | Attachment | Activity Log

Information

Description *	Project *	WBS *	Technical Submittal Type *
GATE BARRIER MATERIAL SUBMITTAL	FP-2009000120 Construction of Main Gate House for Clu	FP-2009000120-02-01 Construction	MATERIAL SUBMITTAL
Work center *	**Approver ***	**Technical Submittal Owner**	**Technical Submittal No.**
CDPM CD Project Manager	Sachin Kudlu	GRANS CONTRACTING LLC	500009730
Purchase Order	**Physical Samples Submitted? ***		
3100006963	No		

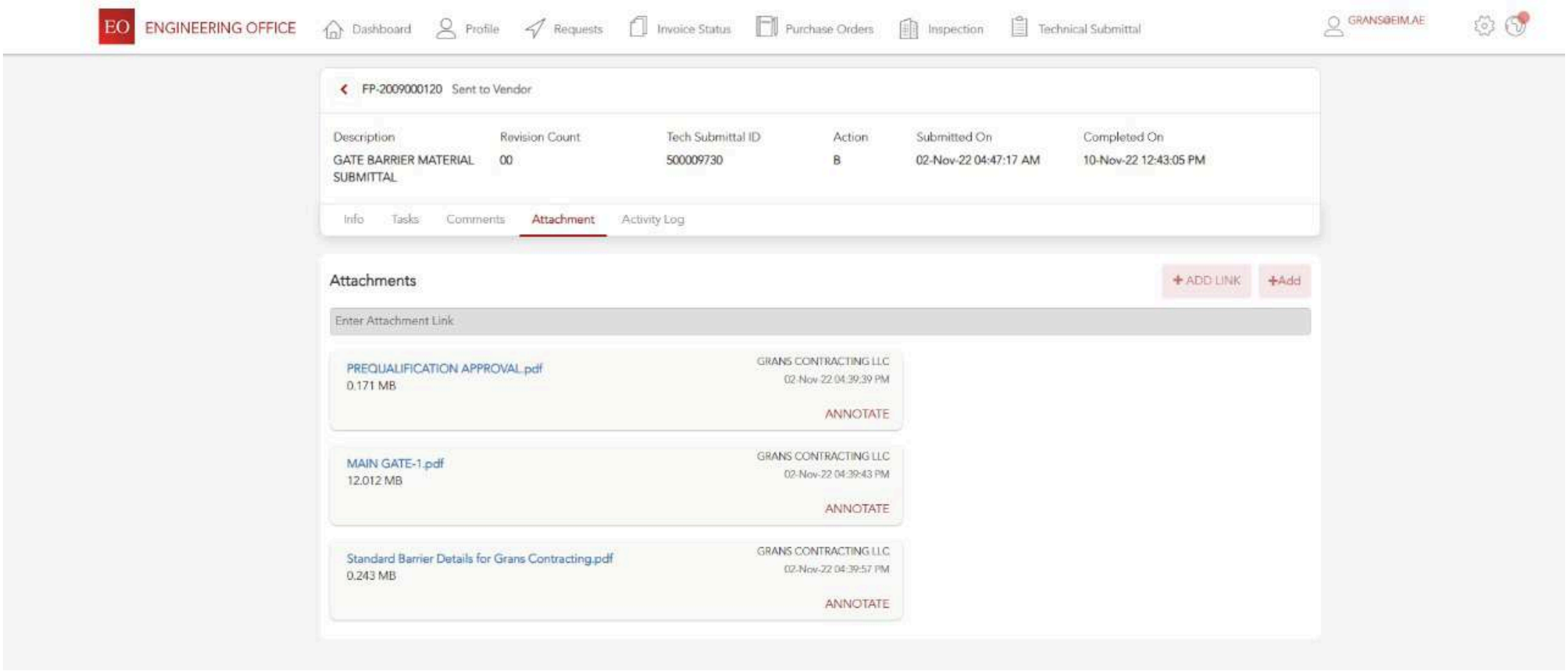
EO ENGINEERING OFFICE
Dashboard
Profile
Requests
Invoice Status
Purchase Orders
Inspection
Technical Submittal
GRANS@EIM.AE
FP-2009000120 Sent to Vendor
Description
GATE BARRIER MATERIAL SUBMITTAL
Revision Count
00
Tech Submittal ID
500009730
Action
B
Submitted On
02-Nov-22 04:47:17 AM
Completed On
10-Nov-22 12:43:05 PM
Info
Tasks
Comments
Attachment
Activity Log
Attachments
+ ADD LINK
+Add
Enter Attachment Link
PREQUALIFICATION APPROVAL.pdf
0.171 MB
GRANS CONTRACTING LLC
02-Nov-22 04:39:39 PM
ANNOTATE
MAIN GATE-1.pdf
12.012 MB
GRANS CONTRACTING LLC
02-Nov-22 04:39:43 PM
ANNOTATE
Standard Barrier Details for Grans Contracting.pdf
0.243 MB
GRANS CONTRACTING LLC
02-Nov-22 04:39:57 PM
ANNOTATE

GRANS CONTRACTING LLC

02-Nov-22 04:41:32 PM
Comment

AS PER THE COMMENT , HERE BY SUBMITTING NEW GATE BARRIER MATERIAL SUBMISSION . PREVIOUS PREQUALIFICATION , FOUNDATION DETAILS AND TECHNICAL SUBMITTAL ATTACHED

Don Derrick Hatamosa

07-Nov-22 03:42:03 PM
Comment

no objection subject to client rep/end-user approval.

Srinivas Sama

08-Nov-22 11:45:28 AM
Comment

Provided minimum reinforcement in foundation say T10@150c/c

Abdul Kareem Khan

10-Nov-22 08:36:33 AM
Comment

Electrical comments: 1. provide electrical layout shop drawing showing all details like electrical load, Isolator location, Motor location, Sensor, Warning light, containment between Isolator/motor/Gate barrier, Etc...

GRANS@EIM.AE

FP-2009000120 Sent to Vendor

Description

GATE BARRIER MATERIAL SUBMITTAL

Revision Count

00

Tech Submittal ID

500009730

Action

B

Submitted On

02-Nov-22 04:47:17 AM

Completed On

10-Nov-22 12:43:05 PM

Info Tasks Comments Attachment Activity Log

Attachments

+ ADD LINK +Add

Enter Attachment Link

PREQUALIFICATION APPROVAL.pdf
0.171 MB

GRANS CONTRACTING LLC
02-Nov-22 04:39:39 PM

ANNOTATE (HTTPS://APP.ZIPBOARD.CO/S/TJCHC)

MAIN GATE-1.pdf
12.012 MB

GRANS CONTRACTING LLC
02-Nov-22 04:39:43 PM

ANNOTATE (HTTPS://APP.ZIPBOARD.CO/S/CX7TS)

Standard Barrier Details for Grans Contracting.pdf
0.243 MB

GRANS CONTRACTING LLC
02-Nov-22 04:39:57 PM

ANNOTATE (HTTPS://APP.ZIPBOARD.CO/S/XIA75)

GRANS CONTRACTING L.L.C.

جرانس للمقاولات ش.ذ.م.م

P.O. Box: 66830, Dubai, U.A.E., Tel.: 04 398 6476, Fax: 04 398 6470, E-mail: grans@eim.ae, Web : www.gronscontracting.com

طلب شراء محلي
LOCAL PURCHASE ORDER

M/s. ACCESSKEY LLC

P.O. Box: 127804

Tel: 04-2554582 Fax:

Attn.: Mr. Gani (050-1725959)

S.No.: B 5628

Date: 12/11/2022

Project No.: 162

Qtn. Ref: AK/QT/3047R1/22

Please supply the following in good condition :

Sr. No.	Description	Unit	Qty.	U/Price Dhs.	U/Price Fils	Amount Dhs.	Amount Fils
•	Supply of AFIS DC PRO						
	GATE BARRIERS 6M						
	GERMANY TECHNOLOGY						
	Run Speed 0-9 to 65						
	with 5 years warranty						
	as per your quotation						
	reference AK/QT/3047R1/22						
	dated 10/11/2022						
	(Additional Number of exit lane will						
	be done without any Variation as per						
	Consultant Request)						

Total Amount Dhs. ..

Total Amount		
Discount		
Net Amount		
VAT 5%		
Gross Amount		

TRN: 100070271000003

Delivery Date : As per site requirement Location : Nad Al Sheba

Contact Person : Mr. Tom

Payment Terms : As Agreed Contact Tel. No.: 0542523189

Authorised Signature

Client :	Contractor:	Consultant:
AquaChemie	ARCADE STAR INTERNATIONAL CONSTRUCTION L.L.C	WINNER HOLISTIC CONSULTANTS

MATERIAL SUBMITTAL

DOC REF NO.	ASC-P168-CVL-MS-60	REV NO.00	DATE: 24/11/2022
PROJECT NAME	Proposed Manufacturing Plant for Aqua Chemie at Kizad, Sector: KHIA8, Plot No. 23, Abu Dhabi		
SUBJECT	Material Submittal for Gate Barriers		

MATERIAL DETAILS		LIST Of ENCLOSURE	
ITEM DESCRIPTION		(Tick the related Box)	
Specs. Reference		Vendors Technical Literature	☑
BOQ Reference	SECTION B-P	Compliance Statement	☑
Drawing Reference		Copy of the Related Specs	☑
Material Specified	AETS DC PRO BARRIER	Samples with Sample Tag	☐
Material Proposed	AETS DC PRO Servo Motor Gate Barrier	List of Previous Projects Done	☐
Manufacturer/Supplier	Acess key Automatic Gates Trading L.L.C	Previous Test Results	☐
Remarks		Others, Sepcify.....	☐

TRANSMITTED FOR	☐	INFORMATION	☑	APPROVAL	☐	CHECKING	☐ REVIEW & COMMENTS
CONTRACTOR AUTHORISED SIGNATURE	for Mr.Antony						CONTRACTOR STAMP: ARCADE STAR INTERNATIONAL CONSTRUCTION L.L.C P.O. Box : 93012, Abu Dhabi - U.A.E. PROJECT P168 أركد ستار الدولية للانشاءات ش.ذ.م.م
DATE:	24/11/2022						

CONSULTANT COMMENTS:

.Electrical Comments : Emergency manual disconnect switch shall be provided as per the specification.
BMS and fire alarm interface to be provided as per the requirement. Final approval of brand subject to client .
Remote control access requires , subject to client confirmation .quality should be as per authority standard specification .
Led lights should be timer controlled , baattery back up required minimum 12 hrs . Final approval subject to Architect and structure approval. Final approval subject to client and IT team

☐	A- APPROVED	☑	B- APPROVED AS NOTED	☐	C- REVISE AND RESUBMIT	☐	D- NOT APPROVED

REVIEWED BY (NAME):	Amith N	CONSULTANT STAMP: Abu Dhabi U.A.E WINNER HOLISTIC CONSULTANTS
CONSULTANT SIGNATURE:		
DATE:	16/12/2022	

CLIENT'S COMMENTS:(IF ANY)

CLIENT SIGNATURE:		DATE:

FINAL DOCUMENT STATUS:

☐	A- APPROVED	☐	B- APPROVED AS NOTED	☐	C- REVISE AND RESUBMIT	☐	D- NOT APPROVED

CONTRACTOR RECEIVED SIGN:		DATE:

معهد الشارقة للسياقة
Sharjah Driving Institute

PURCHASE ORDER

Purchase Order No	PO/401/00045	**Payment Terms**	Net 30
Buyer	Ambale Gurumurthy Ashwin	**Creation Date**	20-JUN-2021
Department Name	Procurement	**Delivery Date**	05-JUL-2021
Requester	Afram Malko,Younan	**Purchase Requisition No**	PR/401/00375
SDI TRN	100428754400003	**Organization Name**	SDI - Main Store

Supplier Name	ACCESS KEY AUTOMATIC GATES TRADING LLC	**Tel**	+971042554590
Address	PO BOX,BURDUBAI KANOO GROUP BLDG,DUBAI,AE	**Fax**	
Contact	GANI MR.	**Email**	info@accesskeyllc.com
TRN No	100350218200003	**Supplier Reference No**	AEST/QT/2842R1/2021

Ship To
SDI - Main Stores
Sharjah Driving Institute LLC
Sheikh Khalid Bin Khalid Al Qassimi Street,Al Ramta,
Sharjah,United Arab Emirates

Bill To
SDI - Main Stores
Sharjah Driving Institute LLC
Sheikh Khalid Bin Khalid Al Qassimi Street,Al Ramta,
Sharjah,United Arab Emirates

Initiated Department Facility Management

We are pleased to place our order with you for the following Items/Services:

S.No	Item	Description	Warranty	UOM	Quantity	Unit Price	Amount (AED)
1	SFAR0154	Supply and Installation of AETS Gate Barrier System at Khorfakkan Branch	3 Years	EA	5		
Total							
Discount							
VAT 5%							
Grand Total	**Amount in Words:** And Zero Fils						Arab Emirates Dirhams

Note to Supplier: Product Details :
Supply and Installation of AETS Gate Barrier System at Khorfakkan Branch
Includes : Aets DC Gate Barrier 4mtr octogon aluminium arms with red reflector and end caps, Green led strip ligts for open and red led strip lights for close, 12v Battery backup, safety photocell,rubber bottom for all arms, receiver 12/24v - 5nos, remote-10nos, UHF reader-4nos, TCP/IP controller-2nos, Powder coated reader stand, photo cell stand-4nos, Pushbutton-1no with Civil work, cabling, programming, testing and commissioning.

Delivery and Installation Location : Khorfakkan, Sharjah
Warranty : 3 Years
P ent Terms : 45Days after handover

This Document has been approved electronically and hence does not require any signature(s).

Approved By	Approved By	Approved By	Approved By	Approved By
Jiji George Vadakkan	Tariq Abdul Rahman Al Saleh	NA	NA	NA
Finance Manager	Chief Executive Officer	NA	NA	NA

Terms and Conditions
1.The Items/ Services when delivered, shall conform to the specification and/or description set out in this Purchase Order (PO).
2. SDI standard terms and conditions as per the attached Annexure shall form an integral part of this PO.

As part of company compliance with SDI's Occupational Health, Safety & Environmental Systems, you are kindly requested to provide us with any Material Safety Data Sheets (MSDS), & Environmental Impact for purchased materials.
SDI is committed to environment friendly and sustainable procurement. We expect all our suppliers, service providers, and subcontractors to be environmentally conscious.

Disclaimer: This transmission is intended solely for the person or organization to whom it is addressed. It may contain privileged and confidential information. If you are not the intended recipient, you should not copy, distribute or take any action in reliance on it. If you have received this transmission in error, please notify the sender by quick reply.

中国铁建

中国铁建股份有限公司阿布扎比分公司
China Railway Construction Corporation Limited-Abu Dhabi

Tax Registration Number: 100443247000003

PURCHASE ORDER

Purchase Order No.: 2D-ZYMT-LPOM-2011097 Date: 2020/11/17

Vendor Details	Delivery Details
M/s. ACCESS KEY AUTOMATIC GATES TRADING LLC TRN#: 100350218200003 Attention To: Gani Phone:+971 50 172 5959 Your Reference No.: AETS/QT/2454/2020	**Project: Etihad Railway 2D-CRCC Tunnel Construction 1** Contact Person: Abrar Phone: +971 52 285 6291 Delivery Date: 2020/11/19 Location: Fujairah / 25°16'35.2"N 56°08'40.9"E

Please supply items mentioned below:

No.	Item Code	Item Description	Unit	Quantity	Unit Price AED	Amount AED
1		Supply and Installation of AETS 4M Barriers with Remote (Single Remote Access for Both Gates)	Qty	7		

Sub Total:
Discount: 0.00
VAT 5%
Grand Total:

Amount in words

Payment Terms:	100% payment within 30 days from the date of delivery & submission of invoice
Terms & Condition:	1. Material should be delivered with original delivery note and copy of P.O. 2. We reserve the right to amend and cancel P.O. with written notice. 3. In case of any discrepancy and short coming, you will be required to take back the material immediately. 4. P.O. number must be stated on invoices. 5. All tax invoices to be submitted within one week of delivery. 6. Material quality should be as per government standard specification. 7. Material should be supplied with original delivery challan, weighment slip with empty & loaded. 8. Rate inclusive of Transportation with Toll Charges and Material. 9. Material should be supplied as per the delivery location given in email. 10. It Should AETS DC gate barrier 4m mechanical and electrical integrated design. Planetary gear drive, high torque, un-blocked, oil tight, no noise, automatically unlocked when the power is off, auto reverse built in smart collision detection technology allows arm to auto reverse when hit with an obstacle during closing to prevent further with 5 million operation times. Speed can be adjusted based on Run Speed 1.5s to 3s, Rated voltage AC100V~AC264V, DC24V 50Hz~60Hz, Rated power 50W, the maximum power of 100W Work temperature -40 ~ 75'C, 11. Two years for the Barriers against manufacturing defects and full service provide for Two years. 12. ARM is made of octagon aluminum 4m with Red reflective size 4.5cm *8.6cm with end cap 13. LED Lights 12v up to 4m open Green, Close Red with ARM accessories, Timer for automatic on and off Led Light 6PM on, 6AM off. 14. It includes 12V Battery backup for emergence, Safety Photocell, ARM Bottom Rubber 4M (Crash/dent protection, Receiver with antenna, Remotes, Push Button

Prepared By	Reviewed by Procurement Manager	Approved by Project Manager

中国铁建股份有限公司阿布扎比分公司

China Railway Construction Corporation Limited-Abu Dhabi

Tax Registration Number: 100443247000003

PURCHASE ORDER

Purchase Order No.: 2D-ZYMT-LPOM-2012005 Date: 2020/12/06

Vendor Details	Delivery Details
M/s. ACCESS KEY AUTOMATIC GATES TRADING LLC TRN#: 100350218200003 Attention To: Gani Phone:+971 50 172 5959 Your Reference No.: AETS/QT/2454/2020	**Project: Etihad Railway 2D-CRCC Tunnel Construction 2** Contact Person: Mr. Liu Zhongqi Phone: +971 50 595 2743 Delivery Date: 2020/12/08 Location: Fujairah

Please supply items mentioned below:

No.	Item Code	Item Description	Unit	Quantity	Unit Price AED	Amount AED
1		Supply and Installation of AETS 4M Barriers with Remote (Single Remote Access for Both Gates)	Qty	4		

Sub Total:
Discount: 0.00
VAT 5%
Grand Total:

Amount in words

Payment Terms:	100% payment within 30 days from the date of delivery & submission of invoice
Terms & Condition:	1. Material should be delivered with original delivery note and copy of P.O. 2. We reserve the right to amend and cancel P.O. with written notice. 3. In case of any discrepancy and short coming, you will be required to take back the material immediately. 4. P.O. number must be stated on invoices. 5. All tax invoices to be submitted within one week of delivery. 6. Material quality should be as per government standard specification. 7. Material should be supplied with original delivery challan, weighment slip with empty & loaded. 8. Rate inclusive of Transportation with Toll Charges and Material. 9. Material should be supplied as per the delivery location given in email. 10. It Should AETS DC gate barrier 4m mechanical and electrical integrated design. Planetary gear drive, high torque, un-blocked, oil tight, no noise, automatically unlocked when the power is off, auto reverse built in smart collision detection technology allows arm to auto reverse when hit with an obstacle during closing to prevent further with 5 million operation times. Speed can be adjusted based on Run Speed 1.5s to 3s, Rated voltage AC100V~AC264V, DC24V 50Hz~60Hz, Rated power 50W, the maximum power of 100W Work temperature -40 ~ 75'C, 11. Two years for the Barriers against manufacturing defects and full service provide for Two years. 12. ARM is made of octagon aluminum 4m with Red reflective size 4.5cm *8.6cm with end cap 13. LED Lights 12v up to 4m open Green, Close Red with ARM accessories, Timer for automatic on and off Led Light 6PM on, 6AM off. 14. It includes 12V Battery backup for emergence, Safety Photocell, ARM Bottom Rubber 4M (Crash/dent protection, Receiver with antenna, Remotes, Push Button

Prepared By	Reviewed by Procurement Manager	Approved by Project Manager

中国铁建

中国铁建股份有限公司阿布扎比分公司
China Railway Construction Corporation Limited-Abu Dhabi

Tax Registration Number: 100443247000003

PURCHASE ORDER

Purchase Order No.: 2D-ZYMT-LPOM-2010067 Date: 2020/10/19

Vendor Details	Delivery Details
M/s. ACCESS KEY AUTOMATIC GATES TRADING LLC	**Project: Etihad Railway 2D-CRCC Tunnel Construction 1**
TRN#: 100350218200003	Contact Person: Abrar
Attention To: Gani	Phone: +971 52 285 6291
Phone:+971 50 172 5959	Delivery Date:
Your Reference No.: AETS/QT/2454/2020	Location: Fujairah / 25°16'35.2"N 56°08'40.9"E

Please supply items mentioned below:

No.	Item Code	Item Description	Unit	Quantity	Unit Price AED	Amount AED
1		Supply and Installation of AETS 4M Barriers with Remote (Single Remote Access for Both Gates)	Qty	5		

Sub Total:	
Discount:	**0.00**
VAT 5%	
Grand Total:	

Amount in words Dirhams Only

Payment Terms:	100% payment within 30 days from the date of delivery & submission of invoice
Terms & Condition:	1. Material should be delivered with original delivery note and copy of P.O. 2. We reserve the right to amend and cancel P.O. with written notice. 3. In case of any discrepancy and short coming, you will be required to take back the material immediately. 4. P.O. number must be stated on invoices. 5. All tax invoices to be submitted within one week of delivery. 6. Material quality should be as per government standard specification. 7. Material should be supplied with original delivery challan, weighment slip with empty & loaded. 8. Rate inclusive of Transportation with Toll Charges and Material. 9. Material should be supplied as per the delivery location given in email. 10. It Should AETS DC gate barrier 4m mechanical and electrical integrated design. Planetary gear drive, high torque, un-blocked, oil tight, no noise, automatically unlocked when the power is off, auto reverse built in smart collision detection technology allows arm to auto reverse when hit with an obstacle during closing to prevent further with 5 million operation times. Speed can be adjusted based on Run Speed 1.5s to 3s, Rated voltage AC100V~AC264V, DC24V 50Hz~60Hz, Rated power 50W, the maximum power of 100W Work temperature -40 ~ 75'C, 11. Two years for the Barriers against manufacturing defects and full service provide for Two years. 12. ARM is made of octagon aluminum 4m with Red reflective size 4.5cm *8.6cm with end cap 13. LED Lights 12v up to 4m open Green, Close Red with ARM accessories, Timer for automatic on and off Led Light 6PM on, 6AM off. 14. It includes 12V Battery backup for emergence, Safety Photocell, ARM Bottom Rubber 4M (Crash/dent protection, Receiver with antenna, Remotes, Push Button,

Prepared By	Reviewed by Procurement Manager	Approved by Project Manager
Thurs/ 19/10/2020		

中国铁建

中国铁建股份有限公司阿布扎比分公司
China Railway Construction Corporation Limited-Abu Dhabi

Tax Registration Number: 100443247000003

PURCHASE ORDER

Purchase Order No.: 2D-ZYMT-LPOM-2009062 Date: 2020/09/20

Vendor Details	Delivery Details
M/s. ACCESS KEY AUTOMATIC GATES TRADING LLC	**Project: Etihad Railway 2D-CRCC Tunnel Construction 4**
TRN#: 100350218200003	Contact Person: Mr. Kang Qingsha
Attention To: Gani	Phone: +971 54 704 5782
Phone:+971 50 172 5959	Delivery Date: 2020/09/23
Your Reference No.: AETS/QT/2454/2020	Location: Fujairah / 25°09'52.0"N 56°19'17.6"E

Please supply items mentioned below:

No.	Item Code	Item Description	Unit	Quantity	Unit Price AED	Amount AED
1		Supply and Installation of AETS 4M Barriers with Remote (Single Remote Access for Both Gates)	Qty	2		

Sub Total:
Discount: 0.00
VAT 5%
Grand Total:

Amount in words Dirhams Only

Payment Terms:	100% payment within 30 days from the date of delivery & submission of invoice
Terms & Condition:	1. Material should be delivered with original delivery note and copy of P.O. 2. We reserve the right to amend and cancel P.O. with written notice. 3. In case of any discrepancy and short coming, you will be required to take back the material immediately. 4. P.O. number must be stated on invoices. 5. All tax invoices to be submitted within one week of delivery. 6. Material quality should be as per government standard specification. 7. Material should be supplied with original delivery challan, weighment slip with empty & loaded. 8. Rate inclusive of Transportation with Toll Charges and Material. 9. Material should be supplied as per the delivery location given in email. 10. It Should AETS DC gate barrier 4m mechanical and electrical integrated design. Planetary gear drive, high torque, un-blocked, oil tight, no noise, automatically unlocked when the power is off, auto reverse built in smart collision detection technology allows arm to auto reverse when hit with an obstacle during closing to prevent further with 5 million operation times. Speed can be adjusted based on Run Speed 1.5s to 3s, Rated voltage AC100V~AC264V, DC24V 50Hz~60Hz, Rated power 50W, the maximum power of 100W Work temperature -40 ~ 75℃, 11. Two years for the Barriers against manufacturing defects and full service provide for Two years. 12. ARM is made of octagon aluminum 4m with Red reflective size 4.5cm *8.6cm with end cap 13. LED Lights 12v up to 4m open Green, Close Red with ARM accessories, Timer for automatic on and off Led Light 6PM on, 6AM off. 14. It includes 12V Battery backup for emergence, Safety Photocell, ARM Bottom Rubber 4M (Crash/dent protection, Receiver with antenna, Remotes, Push Button

Prepared By	Reviewed by Procurement Manager	Approved by Project Manager
20/09/2020		

The Cove Rotana
Resort – Ras Al Khaimah

The Cove Rotana Resort

Purchase Order

P.O. Box 34429, Ras AL-Khaima
United Arab Emirates
VAT Number: 100337530800003

Contact: **Ramesh KSR**
Phone: +971 7 206 6360
email: ramesh.ksr@thecoverak.com
Delivery Timings: **Sunday to Thursday. 09:00 to 14:00**

Supplier Info

ACCESS KEY AUTOMATIC GATES TRADING L.L.C	
Tel	+971 4 2554590
Fax	
email	
Pay. Term	Credit 45 Days
VAT No.	100350218200003

Deliver To:
The Cove Rotana, Receiving Area
Receiving Area

PO Number: 55111
Placed On: 07/09/2020

For Internal Use.
PR Number 32382
AP Account Number: CA0499

Code	Item Name	Unit	Qty	FOC	Price	Disc	Cost Amt	Tax %	Tax Amt	Total Amt	Delv. Date	Store
7290017	Supply & Installation of AETS PRO Gate Barrier	PIECE	3					5.00 %			12/09/2020	Engineering Dept.

Net Total :
Disc Total : 0.00
Vat Total:
Grand Total :

PO Notes:

Condition of Purchase

1. All items must be delivered to our receiving office with invoice & duplicate copy, our receiving agent after verifying the goods/service, will return the duplicate invoice with our seal.2. We reserve all rights to accept/reject any goods/service not up to our required quality/ specification/delivering beyond the delivery date mentioned in LPO.3. A copy of this LPO must be attached to the invoice upon delivery of goods/services.4. Delivery time are 08.00 am to 15.00 Saturday to Thursday
5.Main stores remain closed on every Tuesdays

Ramesh KSR
Director of Materials Management
07/09/2020 09:05:09

Vasanth Kumar
Director of Finance
07/09/2020 15:14:23

Klaus Reinwand
General Manager
07/09/2020 16:05:18

AL MASAOOD L.L.C. المسعود ذ.م.م.

PURCHASE ORDER

Name & Address
ACCESS KEY AUTOMATIC GATES GTRADING L.L.C DUBAI - UAE TRN : 10035 02182 00003

LPR NO : PD-FMS-AM-2020-058, DT. 15.06.2020

No. : **MBM -149076** ---> Quote for future correspondence

Date : 16/06/2020

Cost Centre : 2559/Al Masaood-UD Complex Mussafah

CAPEX NO. 12007, DT. 16.06.2020

S.No.	Description	Qty	Unit	Unit Rate	Amount
1	SUPPLY AND INSTALLATION OF AETS DC PRO GATE BARRIERS	2.00	L/S		
2	VAT @ 5% QUOTE REF. AETS/QT/2265/2019, DT. 27.05.2020	1.00			
	AED				

Payment Terms :	Delivery Location :
50% ADVANCE & 50% ON JOB COMPLETION	

Special Condition / Instruction

1. THIS LPO IS VALID FOR A PERIOD OF 90 DAYS FROM THIS ORDER DATE.

All invoices raised against this purchase order must be presented to Finance Division, P.O. Box 322, Abu Dhabi for registration & payment.	Authorized : sofiya_poland@masaood.com	Received :

شركة السعديات للاستثمار والتطوير
Saadiyat Development and Investment Company

PURCHASE ORDER

P.O # [PO/SDIC-85/1220]
Date: December 13, 2020

VENDOR DETAILS
Access Key LLC
PO Box: 127804, Dubai, UAE
Tel: +971 4 255 4590
Website: www.aetsllc.com

SHIP TO
Mr. Ronald Rodrigues
SDIC – Office
Saadiyat Island, P.O. Box 526, Abu Dhabi-AE
Tel: +971 2 6277500

DELIVERY METHOD	TERMS OF PAYMENT	DELIVERY DATE

No	DESCRIPTION	UNIT	QTY	UNIT PRICE	TOTAL AMOUNT (AED)
	Supply and Installation of AETS Gate Barriers and UHF Reader				
1	AETS DC gate barrier 5m mechanical & electrical integrated design		4		
2	ARM3000 octagon aluminum 5m w/ Red reflective		4		
3	LED RG - LED Lights 12V up to 5m		4		
4	AETS 7hm - 12V Battery back up for emergency		4		
5	AETS-P5001 (Safety Photocell)		4		
6	AETS-BR134 - ARM Botoom Rubber 5M		4		
7	AETS-RV433 Receiver		4		
8	AETS-RM433 Remote		4		
9	AETS-132 Loop detector 220V for Auto exit		2		
10	AETS-PB Push Button		2		
11	Access Key-Supply,Installation & Programming		2		
	UHF Long Range Reader				
1	UHF7641 - TMT7641 UHF Reader		1		
2	7602 TCP/IP Controller Two Door		1		
3	AETS Reader Stand		1		
4	AETS UHF Cards 866MHz and EM 125Mhz		300		
5	Supply,Installation & Programming Testing.SoftwareTraining		1		
1	**All Civil, Electrical for 4 barriers**		-		
	Note: All terms as per Quotation and Invoice.				
				Subtotal	
				VAT (5%)	
				Total Amount	

1. Please send two copies of your invoice.
2. Enter this order in accordance with the prices, terms, delivery method, and specifications listed above.
3. The Company reserves the right of partial or complete return of items if not as per the specification, or delivery date in not honored and incase of defective material.
4. Please notify us immediately if you are unable to ship as specified.
5. Send all correspondence to: Finance Department
   Saadiyat Island, P.O. Box 114818, Abu Dhabi-UAE,
   Phone +971 2 6509993 Fax +971 2 6509963

Prepared by:	Noted by	Authorized Signatories	Received by
Diovelen Villa		2020 16/12	

AL AVON
CONTRACTING (L.L.C.)

العون
للمقاولات (ش.ذ.م.م)

PURCHASE ORDER

M/s. ACCESS KEY AUTOMATIC GATES TRADING LLC
P.O. Box:127804, DUBAI
Tel:04 2554590, Fax:050 1725959
A/C.No. [S0868]

VAT Reg.No. 100350218200003

AL AVON VAT REG.No.
100331669000003

LPO No: **93817**
LPO Date: 16/06/2023
Delivery at: CI-126-GLOBAL S
Delivery on: / /

Please supply us with the following materials.

Sl.No	Description	Unit	Qty.	Unit Price	Total Price	VAT Amount
1	AETS DC PRO GATE BARRIER 01. AETS PRO DC gate barrier 5m mechanical and electrical integrated design. Planetary gear drive, high torque, un-blocked oil tight, no noise, automatically unlocked when the power is off, auto reverse built in smart collision detection technology allows arm to auto reverse when hit with an obstacle during closing to prevent further with 10 mil operation times. Speed can be adjusted based on Run Speed 03s to 05s, Rated voltage AC100V~AC264V, DC24V 50Hz~60Hz Rated power 50W, the maximum power of 100W Work temperature -40 ~ 75'C, Protection degree IP55 Very intensive use. With two remote 2.Telescopic ARM 5M with red reflective	NOS	2			

Total Amount
Disc %
Net Amount

Note: SITE : GLOBAL SURFACE : JAFZA
CONTACT PERSON :MR,RAJEEV:055-8301064

Prepared by

for AL Avon Contracting

تليفون : ٣٩٥٨٧٧١ - ٠٤ . فاكس : ٣٩٥٨٧٧٥ - ٠٤ . ص.ب : ١١٩٠٧٠ دبي - أ.ع.م.
Tel.: 04-3958771, Fax : 04-3958775, P.O. Box : 119070, Dubai - U.A.E., E-mail : alavoncontracting@gmail.com
Website : www.alavoncontractingllc.com

AL AVON
CONTRACTING (L.L.C.)

الـــعـــــون
للـــمـــقـــا ولات (ش.ذ.م.م)

PURCHASE ORDER

M/s. ACCESS KEY AUTOMATIC GATES TRADING LLC
P.O. Box:127804, DUBAI
Tel:04 2554590, Fax:050 1725959
A/C.No. [S0868] Attn: NANI
VAT Reg.No. 100350218200003

AL AVON VAT REG.No.
100331669000003
LPO No: **93817**
LPO Date: 16/06/2023
Delivery at: CI-126-GLOBAL S
Delivery on: / /

Please supply us with the following materials.

Sl.No	Description	Unit	Qty.	Unit Price	Total Price	VAT Amount
	3. LED Lights 12V upto 5M open Green, close Red with ARM accessories					
	4. Battery backup for emergence					
	5. ARM Bottom Rubber 5M (Crash/dent protectio					
	6. Two REmote , it work 10 to 30 meters					
	07. Receiver 12/24v 433MH					
	8. Push button (opn/close)					
	9.Supply, Installation, Programming & Testing commissioning.					
2	AETS DC PRO GATE BARRIER	NOS	1			
	01. AETS PRO DC gate barrier 6m mechanical and electrical integrated design.					
	NOTE : OTHER SPECIFICATION AS ABOVE MENTIONED					
	REF QUOTE : AK-QT-005727					

Total Amount
Disc %
Net Am

Note: SITE : GLOBAL SURFACE : JAFZA
CONTACT PERSON :MR,RAJEEV:055-8301064

Prepared by

for AL Avon Contracting

تليفون : ٣٩٥٨٧٧١ - ٠٤ . فاكس : ٣٩٥٨٧٧٥ - ٠٤ . ص.ب : ١١٩٠٧٠ دبي - أ.ع.م.
Tel.: 04-3958771, Fax : 04-3958775, P.O. Box : 119070, Dubai - U.A.E., E-mail : alavoncontracting@gmail.com
Website : www.alavoncontractingllc.com

CRCC-GTGC Joint Venture

(Joint Venture between China Railway Construction Corporation Limited and Ghantoot Transport & General Contracting LLC)

Tax Registration No. 100610049700003

PURCHASE ORDER

Purchase Order No: ER/CRCC-GTGC/PO/622 **Request No#** MR-P-2C-0272
Date 04/06/2020

Vendor Details

M/s. ACCESS KEY AUTOMATIC GATES TRADING L.L.C, Dubai

TRN # 100350218200003
Attention to:
Phone: +971501725959 **Fax:**
Your Ref No: AETS/QT/2274/2020

Delivery Details

Project: Etihad Rail Network Package 2C-Design and Build Contract-DUBAI, UAE

Contact Person:
Phone:
Delivery Date: 04/06/2020 Location: DUBAI

Please supply items mentioned below:

	Item Code	Item Description	Unit	Quantity	Unit Price AED	Amount AED
1	EXP-DIX-MIX-0303	ELECTRONIC GATE BARRIER Automatic gate barrier 6 mtr (ARM is made of octagon aluminum 6m with Red reflective size 4.5cm *8.6cm with end cap - 1Nos,LED Lights 12v up to 6m open Green, Close Red with ARM accessories, Timer for automatic on and off Led Light 6PM on, 6AM off - 1NOS,12V Battery backup for emergence - 1NOS,Safety Photocell - 1NOS,ARM Bottom Rubber 6M- 1NOS (Crash/dent protection),Receiver 1NOS, Remote-2NOS	NOS	1.00		
2	EXP-DIX-MIX-0303	ELECTRONIC GATE BARRIER Automatic gate barrier - 4.5 mtr (ARM is made of octagon aluminum 4.5m with Red reflective size 4.5cm *8.6cm with end cap - 2nos, LED Lights 12v up to 4.5m open Green, Close Red with ARM accessories, Timer forautomatic on and off Led Light 6PM on, 6AM off - 2nos,12V Battery backup for emergence - 2nos, Safety Photocell - 2nos, ARM Bottom Rubber 4.5M (Crash/dent protection) - 2nos, Receiver - 2nos, Remote - 4nos	NOS	2.00		

Sub Total
Discount 0.00
VAT Amount

Amount in words: AED

Payment Terms: 100% ADVANCE

Terms & Condition:
1. Material Should be delivered with original delivery note and copy of P.O.
2. We reserve the right to amend and cancel P.O. with written notice.
3. In case of any discrepancy or short coming, you will be required to take back the material immediately.
4. PO number must be stated on invoices.
5. All tax invoices to be submitted within one week of delivery.

Included: Supply, Installation,programming, testing commissioning, and civil works.

CRCC-GTGC Joint Venture

(Join Venture between China Railway Construction Corporation Limited and Ghantoot Transport & General Contracting LLC)

Tax Registration No. 100610049700003

PURCHASE ORDER

Purchase Order No: ER/CRCC-GTGC/PO/622
Date 04/06/2020

Request No# MR-P-2C-0272

Vendor Details

M/s. ACCESS KEY AUTOMATIC GATES TRADING L.L.C, Dubai

TRN # 100350218200003
Attention to:
Phone: +971501725959 **Fax:**
Your Ref No: AETS/QT/2274/2020

Delivery Details

Project: Etihad Rail Network Package 2C-Design and Build Contract-DUBAI, UAE

Contact Person:
Phone:

Delivery Date: 04/06/2020 Location: DUBAI

Prepared by	Reviewed by Procurement Manager	Approved by Deputy Project Director	Approved by Project Director
04.6.2020			

AL AVON
CONTRACTING (L.L.C.)



الـــــجـــــون
للـــمـــقـــا ولات (ش.ذ.م.م)

PURCHASE ORDER

M/s. ACCESS KEY AUTOMATIC GATES TRADING LLC
P.O. Box:127804, DUBAI
Tel:04 2554590, Fax:050 1725959
A/C.No. [S0868] Attn: NANI
VAT Reg.No. 100350218200003

AL AVON VAT REG.No.
100331669000003
LPO No: **93372**
LPO Date: 13/03/2023
Delivery at: CI-124-PHARMALI
Delivery on: / /

Please supply us with the following materials.

Sl.No	Description	Unit	Qty.	Unit Price	Total Price	VAT Amount
1	AETS DC PRO GATE BARRIER 01. AETS PRO DC gate barrier 4m mechanical and electrical integrated design. Planetary gear drive, high torque, un-blocked oil tight, no noise, automatically unlocked when the power is off, auto reverse built in smart collision detection technology allows arm to auto reverse when hit with an obstacle during closing to prevent further with 10 million operation times. Speed can be adjusted based on Run Speed 02s to 04s Rated voltage AC100V~AC264V, DC24V 50Hz~60Hz Rated power 50W, the maximum power of 100W Work temperature -40 ~ 75'C, Protection degree IP55 Very intensive use. With two remotes. 02. ARM 4M with Red reflective	PCS	2			

Total Amount
Disc %
Net Amount

Amount in Words:

Note: SITE: PHARMALINK:
CONTACT PERSON :MR.JOHN:055-2230399

Prepared by

for AL Avon Contracting

تليفون : ٣٩٥٨٧٧١ - ٠٤ . فاكس : ٣٩٥٨٧٧٥ - ٠٤ . ص.ب : ١١٩٠٧٠ دبي - أ.ع.م.
Tel.: 04-3958771, Fax : 04-3958775, P.O. Box : 119070, Dubai - U.A.E., E-mail : alavoncontracting@gmail.com
Website : www.alavoncontractingllc.com

AL AVON
CONTRACTING (L.L.C.)

العون
للمقاولات (ش.ذ.م.م)

PURCHASE ORDER

M/s. ACCESS KEY AUTOMATIC GATES TRADING LLC
P.O. Box:127804, DUBAI
Tel:04 2554590, Fax:050 1725959
A/C.No. [S0868] Attn: NANI
VAT Reg.No. 100350218200003

AL AVON VAT REG.No. 100331669000003
LPO No: **93372**
LPO Date: 13/03/2023
Delivery at: CI-124-PHARMALI
Delivery on: / /

Please supply us with the following materials.

Sl.No	Description	Unit	Qty.	Unit Price	Total Price	VAT Amount
	03. LED Lights 12v up to 4M open Green, Close Red with ARM accessories 04. Battery backup for emergence 05.ARM Bottom Rubber 4M (Crash/ dent protection 06. Two Remotes, it 'work 10 to 30 meters 07. Receiver 12/24V 433MHz. 08. Supply, Installation, Programming and Testing Commisioning					
2	Loop Detector PD132 Loop Detector 220V for Auto Exit	NOS	1			

REF QUOTE : AK-QT-005074
WARRRANTY : 5 YEARS WARRNTY FOR GATE BARRIERS MANUFACTURE DEFECT AND 5 YEARS SERVI CE PROVIDED

Total Amount
Disc %
Net Amou

Amount in Words:

Note: SITE: PHARMALINK:
CONTACT PERSON :MR.JOHN:055-2230399

Prepared by

for AL Avon Contracting

تليفون : ٣٩٥٨٧٧١ - ٠٤ . فاكس : ٣٩٥٨٧٧٥ - ٠٤ . ص.ب : ١١٩٠٧٠ دبي - أ.ع.م.
Tel.: 04-3958771, Fax : 04-3958775, P.O. Box : 119070, Dubai - U.A.E., E-mail : alavoncontracting@gmail.com
Website : www.alavoncontractingllc.com

AL AVON
CONTRACTING (L.L.C.)



العون
للمقاولات (ش.ذ.م.م)

PURCHASE ORDER

M/s. ACCESS KEY AUTOMATIC GATES TRADING LLC
P.O. Box:127804, DUBAI
Tel:04 2554590, Fax:050 1725959
A/C.No. [S0868]

VAT Reg.No. 100350218200003

AL AVON VAT REG.No.
100331669000003

LPO No: **94400**
LPO Date: 06/10/2023
Delivery at: CI-128-JST: JAF
Delivery on: / /

Please supply us with the following materials.

Sl.No	Description	Unit	Qty.	Unit Price	Total Price	VAT Amount
1	AETS DC PRO GATE BARRIER 01. AETS PRO DC gate barrier 5m mechanical and electrical integrated design. Planetary gear drive, high torque, un-blocked, oil tight, no noise, automatically unlocked the power is off, auto reverse built in smart detection technology allows arm to auto reverse when hit with an obstacle during closing to prevent further with 10 million operation times. Speed can be adjusted based on Run Speed 03s to 05s, Rated voltage AC100V~AC264V, DC24V 50Hz~60Hz, Rated power 50W, the maximum power of 100W Work temperature -40 ~ 75'C, Protection degree IP55 Very intensive use. With two remotes 2. Telescopic ARM 5M with REd reflective .	NOS	2			

Total Amount
Disc %
Net Amount

Note: SIT E: JST CARGO : JAFZA
CONTACT PERSON :MR,MANOJ:0582272795

Prepared by

for AL Avon Contracting

تليفون : ٣٩٥٨٧٧١ - ٠٤ . فاكس : ٣٩٥٨٧٧٥ - ٠٤ . ص.ب : ١١٩٠٧٠ دبي - أ.ع.م.
Tel.: 04-3958771, Fax : 04-3958775, P.O. Box : 119070, Dubai - U.A.E., E-mail : alavoncontracting@gmail.com
Website : www.alavoncontractingllc.com

1
22047

AL AVON
CONTRACTING (L.L.C.)



العون
للمقاولات (ش.ذ.م.م)

PURCHASE ORDER

M/s. ACCESS KEY AUTOMATIC GATES TRADING LLC
P.O. Box:127804, DUBAI
Tel:04 2554590, Fax:050 1725959
A/C.No. [S0868] Attn: NANI
VAT Reg.No. 100350218200003

AL AVON VAT REG.No. 100331669000003
LPO No: **94400**
LPO Date: 06/10/2023
Delivery at: CI-128-JST: JAF
Delivery on: / /

Please supply us with the following materials.

Sl.No	Description	Unit	Qty.	Unit Price	Total Price	VAT Amount
	closing to prevent further with 10 million operation times. Speed can be adjusted based on Run Speed 04s to 06s, Rated voltage AC100V~AC264V, DC24V 50Hz~60Hz, Rated power 50W, the maximum power of 100W Work temperature -40 ~ 75'C, Protection degree IP55 Very intensive use. With two 02. Telescopic ARM 6M with Red reflective 03. LED Lights 12v up to 5M open Green, Close Red with ARM accessories 04. Battery backup for emergence 05.ARM Bottom Rubber 5M (Crash/dent protection. 06. Two Remotes, it 'work 10 to 30 meters. 07. Receiver 12/24V 433MHz. 08. Photocell Stand 09 Push button (open / close)					

Note: SIT E: JST CARGO : JAFZA
CONTACT PERSON :MR,MANOJ:0582272795

Prepared by

for AL Avon Contracting

تليفون : ٣٩٥٨٧٧١ - ٠٤ . فاكس : ٣٩٥٨٧٧٥ - ٠٤ . ص.ب : ١١٩٠٧٠ دبي - أ.ع.م.
Tel.: 04-3958771, Fax : 04-3958775, P.O. Box : 119070, Dubai - U.A.E., E-mail : alavoncontracting@gmail.com
Website : www.alavoncontractingllc.com

220477

3

MATERIALS SUBMITTAL

REF. No.: GS-CI126-MS-30-00	REV : 0	DATE : 06.06.23

Project Name Construction of Industrial Facility, (G+1) Office And Allied Services
On plot no: S50902 at JAFZA South for M/s. Global Surfaces FZE

Description of Material / Sample:

AETS DC PRO gate Barrier

Location / Area of Use :

MANUFACTURER		SUPPLIER	
Name:	Access Key Automatic Gates Trading LLC	Name:	Access Key Automatic Gates Trading LLC
Address:		Address:	P.O. Box : 127804
Tel.:		Tel.:	04 255 4590
Fax:		Fax:	04 351 5959

Attachements	YES	NO	N/A	REMARKS
Proposed Product is from the PVL	☐	☐	☑	
Compliance Statement	☐	☐	☑	
Specification / BOQ Ref.	☑	☐	☐	BOQ page 356, Spec. page- 34
Drawing Ref. No.	☐	☐	☐	
Manufacturer Details	☑	☐	☐	
Supplier Details	☑	☐	☐	
Product Catalogues / Data Sheet	☑	☐	☐	
Samples	☐	☐	☐	
Other Documents (Specify if any) :	☐	☐	☐	

Issued By Contractor Engineer:	Checked By QA/QC Engineer:	Received by Consultant:
Name: Simrandeep Kaur		Name: Malshani
Sign:		Sign:
Date: 06.06.23		Date: 06-06-2023

For Consultant (Comments): approval is for PQ only

submit shop drwg for final approval

For Consultant's Use:

Name: Krishnakumar

Sign:

Date: 16/6/23

A	APPROVED
☑ B	APPROVED AS NOTED
C	REVISE & RESUBMIT
D	REJECTED
E	MORE CLARIFICATION REQUIRED

Received by:	Distribution:	Project Manager:
Name:	1 - DH (Copy) ☐	Name:
Sign:	2 - Contractor (Original) ☐	Sign:
Date:	3 - DCD (Copy) ☐	Date:
	4 - Others: ☐	

This submittal does not relieve the contractor of his responsibilities in connection with the execution as specified
Attachement check list should be duly filled and highlighted copies of related documents to be attached.
Incomplete applications shall be returned with out review.

RAK CERAMICS

NON INV PO - ADMIN/ - طلب شراء غير السلع

P.O NO./ رقم طلب الشراء 4900032391

endor Code/ رمز المورد 1402023
endor Name / اسم المورد ACCESS KEY AUTOMATIC GATES TRADINGL LC
endor Address/ عنوان المورد THE KANOO GROUP BLDG BUR DUBAI
PO BOX: 127804 , DUBAI
United Arab Emirates

PO Date/ تاريخ طلب الشراء 09-05-2021
Version/ رقم الإصدار 0 Change On/ تغيير في
Our Reference/ رقم المرجع 500031322
Vendor Ref/ رقم مرجع المورد AK/Q/2825/21
Insurance/ رقم التأمين
Delivery Due Date/ تاريخ إستحقاق التوريد 18-03-2021
Purchaser/ اسم موظف المشتريات P13-PUR-MATHEWTD

ttn: / عناية MR. NANI
el. No/ رقم الهاتف 42554590 Fax/ رقم الفاكس 42554890
MAIL ID:/ بريد إلكتروني info@accesskeyll.com
AT Reg No./ الرقم الضريبي 100350218200003

الرقم التسلسلي No	المنتج Item code	وصف المنتج Description	الكمية Quantity	الوحدة UOM	السعر(درهم) Rate	السعر الصافي للعملة (درهم) Ext.Net.Price Curr	ضريبة القيمة المضافة (%) VAT RATE %	الخصم Discount	المبلغ(درهم) Amour
10		Supply& Instal gate Barrier gateNo4 Request for supply and instal new gate barriers (entry <(>&<)> exit) atgate No 4. SCOPE OF WORKS: SUPPLY, INSTALLATION, TESTING AND COMMISSIONING OF GATE BARRIERS - AETSBRAND (AS PER DRAWING/SPECIFICATION APPROVED BY THE CLIENT) BILL OF QUANTITY - SUMMARY: 1) AETS DC PRO gate barrier 4m mechanical and electrical integrated design.Planetary gear drive, high torque, un-blocked, oil tight, no noise, automaticallyunlocked when the power is off, auto reverse built in smart collision detection technologyallows arm to auto reverse when hit with an obstacle during	2.00	AU	[redacted]	[redacted] AED	5.00		[redacted]

OTE:
ase mention order # on Delivery Notes, Invoices, Correspondence & confirm receipt of this order.
nerever applicable as indicated (**), TEST/ANALYSIS/CALIBRATION
rtificates are statutory requirement under ISO 9001.
iginal Invoice to be submitted to Accounts Department along with the copy of Delivery Note for local deliveries.
third-party shall be incompliance with UAE EHS LEGAL Requirements, ISO 14001:2015 and OSHAS 18001:2007 standards.
x Invoices should be mandatorily received within 14 days of date of supply or payment whichever is earlier.
o send the scan/ soft copy of invoices to Accounts payable email ID aphelpdesk@rakceramics.com

AK Ceramics P.J.S.C, P.O. Box 4714, Ras Al Khaimah, United Arab Emirates
el: 07-2467000 | Fax: 07-2445270
AT Reg. No. (TRN) 100244726400003
ebsite: www.rakceramics.com

ISO 9001 BUREAU VERITAS Certification

is purchase order is governed by RAK Ceramics PJSC s and its Group Companies purchase order terms and conditions

00/20210815/99013601 - Page 1 of 6/ رقم الصفحة

لاحظات
جي التكرم بذكر رقم الطلب على مستندات الإستلام، الفواتير، المراسلات وتأكيدات إستلام الطلب.كلما كان
ك ينطبق على النحو المبين (**). إختبار/تحليل/ طرق المعايرة
شهادات هي متطلبات قانونية بحسب آيسو 9001. يتم تسليم الفاتورة الأصلية إلى قسم الحسابات مع
خة من مستندات الإستلام للتوريدات المحلية
ب على الطرف الثالث الإمتثال لمتطلبات القانونية للبيئة، والصحة والسلامة الإماراتية و معايير الأيزو
14001:201 , ومعايير السلامة والصحة المهنية 18001:2007
ب تسليم الفاتورة الضريبية خلال 14 يوم من تاريخ التوريد أو تاريخ الدفع، أيهما يأتي أولاً. كما
جي إرسال صورة من الفواتير إلى البريد الإلكتروني aphelpdesk@rakceramics.com
راميك رأس الخيمة ش.م.ع، ص.ب:4714، رأس الخيمة، الإمارات العربية المتحدة
: 07-2467000 | ف: 07-2445270
قم الضريبي 100244726400003
قع الإلكتروني : www.rakceramics.com
خضع أمر الشراء لشروط وأحكام شركة سيراميك رأس الخيمة ش.م.ع ومجموعة شركاتها التابعة

RAK
CERAMICS

NON INV PO - ADMIN/ - طلب شراء غير السلع

P.O NO./ رقم طلب الشراء 4900032391

No الرقم التسلسلي	Item code المنتج	Description وصف المنتج	Quantity الكمية	UOM الوحدة	Rate السعر/(درهم)	Ext.Net.Price Curr السعر الصافي للمعتمد (درهم)	VAT RATE % ضريبة القيمة المضافة (%)	Discount الخصم	Amour بلغ(درهم)
		PROVIDED)							
	S31301401001	Tec.Ser.Admin.Civl#Bldrep#Ser&Mat	2.00	AU	[redacted]	[redacted] AED			

ıtal/المجموع : AED [redacted]housand six hundred sixty-two and Fils Fifty Only

GROSS TOTAL/المجموع الإجمالي: [redacted]

elivery Terms/شروط التوصيل: DAP-DEL. AT PLACE

Discount / الخصم:

acking Remarks/ملاحظات التعبئة:

ASSESSABLE VALUE/القيمة الخاضعة للضريبة: [redacted]

ayment Terms/شروط الدفع: 30 DAYS FROM DELIVERY DATE

VAT/ضريبة القيمة المضافة: [redacted]

emarks/ للملاحظات: supply and instal new gate barriers (entry <(>&<)> exit) at gate No 4.

NET AMOUNT/صافي المبلغ: [redacted]

** This is a system generated approved purchase order **

تم توليد أمر الشراء المعتمد هذا إلكترونيا

CPO

OTE:

ıase mention order # on Delivery Notes, Invoices, Correspondence & confirm receipt of this order.
ıerever applicable as indicated (**), TEST/ANALYSIS/CALIBRATION
rtificates are statutory requirement under ISO 9001.
iginal Invoice to be submitted to Accounts Department along with the copy of Delivery Note for local deliveries .
third-party shall be incompliance with UAE EHS LEGAL Requirements, ISO 14001:2015 and OSHAS 18001:2007 standards.
x Invoices should be mandatorily received within 14 days of date of supply or payment whichever is earlier.
ıo send the scan/ soft copy of invoices to Accounts payable email ID aphelpdesk@rakceramics.com

AK Ceramics P.J.S.C, P.O. Box 4714, Ras Al Khaimah, United Arab Emirates
el: 07-2467000 | Fax: 07-2445270
AT Reg. No. (TRN) 100244726400003
'ebsite: www.rakceramics.com

ISO 9001 BUREAU VERITAS Certification

Is purchase order is governed by RAK Ceramics PJSC s and its Group Companies purchase order terms and conditions

00/20210815/99013601 - Page 3 of 6/رقم الصفحة

لاحظات

جي التكرم بذكر رقم الطلب على سندات الإستلام، الفواتير، المراسلات وتأكيدات إستلام الطلب.كلما كان
ك ينطبق على النحو المبين (**)، إختبار/تحليل/ طرق المعايرة
شهادات هي متطلبات قانونية بحسب أيسو 9001. يتم تسليم الفاتورة الأصلية إلى قسم الحسابات مع
بخة من سندات الإستلام للتوريدات المحلية
ب على الطرف الثالث الإمتثال للمتطلبات القانونية للبيئة، والصحة والسلامة الإماراتية و معايير الأيزو
14001:201 , ومعايير السلامة والصحة المهنية 18001:2007
ب تسليم الفاتورة الضريبية خلال 14 يوم من تاريخ التوريد أو تاريخ الدفع، أيهما يأتي أولاً. كما
جي إرسال صورة من الفواتير إلى البريد الإكتروني aphelpdesk@rakceramics.com

راميك رأس الخيمة ش.م.ع، ص.ب:4714، رأس الخيمة، الإمارات العربية المتحدة
ف: 07-2445270 | 07-2467000 :
قم الضريبي 100244726400003
قع الإلكتروني : www.rakceramics.com
خضع أمر الشراء لشروط وأحكام شركة سيراميك رأس الخيمة ش.م.ع ومجموعة شركاتها التابعة

GÜNAL
Construction DUBAI

PURCHASE ORDER

P. O. # : MNG-R1098-0140

INVOICE / SHIP TO
GUNAL CONSTRUCTION TRADING & INDUSTRY CO. P.O. BOX 115602 DUBAI, UAE

PROJECT RTA 1098

ATTENTION	MR. SRINIVAS - 056 649 1999
VENDOR	**M/S ACCESS KEY AUTOMATIC GATES TRADING LLC**
FAX #	
TEL #	04 255 4590

OUR PHONE #	**04 882 1099**		
OUR FAX #	**04 882 1603**		
DUE DATE	22-Aug-2023	P.O. DATE	22-Aug-2023
YOUR REF. #	**AK-QT-006013**		
OUR REF. #	**MNG-R1098-0140**	**TRN:100214177600003**	

We are hereby placing with your goodselves an order for the goods listed hereunder, subject to and as per the terms and conditions contained herein, attached hereto, all of which shall constitute an agreement between **GUNAL CONSTRUCTION TRADING & INDUSTRY CO.** and the **VENDOR**.
You are kindly requested to acknowledge receipt and acceptance of this Purchase Order by return fax or email.

ITEM NO	DESCRIPTION	COST CODE	UNIT	QTY	UNIT PRICE	TOTAL
1	**AETS DC 3M BARRIER GATE WITH DISPLAY -MECHANICAL & ELECTRICAL INTEGRATED DESIGN**	1.010	NO	2.00		
	SPECS: -SPEED CAN BE ADJUSTED BASED ON ARM LGT RUN SPEED 2S TO 4S -RATED VOLTAGE AC100V-AC26AV, DC24V 50Hz-60Hz, -RATED POWER 50W -MAX POWER OF 100W -WORK TEMP - ARM IS MADE OF OCTAGON ALUM, RED REFLECTIVE WITH END CAP -SAFETY PHOTOCELL -ARM BOTTOM RUBBER -RECEIVER 12/24V 433MHz -FLASHING LIGHT -SUPPLY & INSTALLATION AND PROGRAMMING ,TESTING & COMMISSIONING					
	WARRANTY: 2 YEARS					
	NOTE: VAT CHARGES WILL ONLY BE APPLICABLE WITH REGISTERED TRN INDICATED ON SUPPLIER'S INVOICES.					

PLEASE ATTACH LPO COPY & COMPLIANCE CERTIFICATE ON DELIVERY NOTES.

TOTAL		
DISCOUNT		
VAT	5%	
GRAND TOTAL		

FMR-R1098-0181 (MECHANICAL) SECURITY

NOTES: **PRICES INCLUDES DELIVERY & WARRANTY**

Upon arrival of goods please NOTIFY : **Ms. Maricel RAMIREZ/ Mr. Niyazi BAYRAKTAR**
Procurement and Logistics Dept. **Procurement & Logistic Officer / Warehouse In-Charge**
Cell Phone 055 956 0817 / 055 956 0805

Payment Terms : **100% PAYMENT AFTER COMPLETION OF JOB**

Delivery Terms: **SITE DELIVERY**

Prepared by: **Maricel RAMIREZ**

Notify address is same as invoice address.

Delivery Address : Hessa street site behind Al barsha Police Station

APPROVED BY	Yasar UZUN
TITLE	Procurement Manager
SIGNATURE	
DATE	22 Aug 2023

APPROVED BY	Levent HACIYUSUFOGLU
TITLE	Deputy Project Manager
SIGNATURE	
DATE	22 August 2023

APPROVED BY	Mehmet EKIM
TITLE	Project Manager
SIGNATURE	
DATE	22 August 2023

DCC

Purchase Order

شركة دبي للمقاولات ش.م.خ
Dubai Contracting
Company PSC

PO Box 232, Dubai
United Arab Emirates
dcc-group.com

T +971 (0)4 333 7100
F +971 (0)4 333 0821
E dcc@dcc-group.com

TRN NO: 100017463900003

Project: **GATE AVENUE RETAIL UNIT DEMOLITION WORKS(J001/22B)**

No: **102405102** 13/06/2024
Rev No: 0
PO Type : NI

Supplier: **ACCESS KEY AUTOMATIC GATES TRADING LLC**
THE KANOO GROUP BLDGBUR DUBAIOFFICE 12

Supplier Ref: AK-QT-007007-R2 / 11/06/2024 00:00:00

Please supply the following at: ABOOBACKER/HARI 050-2765211/056-4810896

SN	Description	Unit	Qty	Price	Amount	Discount Amount	Net Amount
1	GATE BARRIER WORKS AT THE ABOVE REFERENCED PROJECT, DETAIL AS GIVEN. AETS DC PRO BARRIER 4 & 6M 01. AETS PRO DC GATE BARRIER 4M MECHANICAL AND ELECTRICAL INTEGRATED DESIGN. PLANETARY GEAR DRIVE, HIGH TORQUE, UN-BLOCKED, OIL TIGHT, NO NOISE, AUTOMATICALLY UNLOCKED WHEN THE POWER IS OFF, AUTO REVERSE BUILT IN SMART COLLISION DETECTION TECHNOLOGY ALLOWS ARM TO AUTO REVERSE WHEN HIT WITH AN OBSTACLE DURING CLOSING TO PREVENT FURTHER WITH 10 MILLION OPERATION TIMES. SPEED CAN BE ADJUSTED BASED ON RUN SPEED 02S TO 04S, RATED VOLTAGE AC100V~AC264V, DC24V 50HZ~60HZ, RATED POWER 50W, THE MAXIMUM POWER OF 100W WORK TEMPERATURE -40 ~ 75'C, PROTECTION DEGREE IP55 VERY INTENSIVE USE. WITH TWO REMOTES. 02. ARM 4M WITH RED REFLECTIVE. 03. TWO REMOTES, IT 'WORK 10 TO 30 METERS. 04. RECEIVER 12/24V 433MHZ. 05. SUPPLY, INSTALLATION, PROGRAMMING AND TESTING COMMISSIONING. ALL AS PER APPROVED ABOVE REFERRED SUPPLIER QUOTATION. (WORK TERMS: AS PER ENG. INSTRUCTION)	NOS	4.00				

TOTAL AMOUNT
LESS DISCOUNT
TOTAL AFTER DISCOUNT
VAT AMOUNT

AED

Payment Terms: CDC UPON COMPLETION OF WORK

For Dubai Contracting Company PSC

Remarks: Req No:102402334-J001/22B-Jun 10 2024 9:26AM

PRM / PRO: Jakir / DCC-PUR-JAKIR #05004

White Supplier **Blue** Job **Pink** Accounts **Green** Procurement Dept.
Date : 13/06/2024

Manager:

Gardinia Building Contracting LLC
P.O.Box 118696, Sheikh Zayed Road, Dubai, U.A.E
United Arab Emirates
info@gardinia.ae
+97143596673
100455659100003

MATERIAL PURCHASE ORDER

VENDOR DETAILS	
ACCESS KEY AUTOMATIC GATES TRADING L.L.C	
OFFICE NO 12, THE KANOO GROUP BUILDING, DUBAI, AL RAFFA, DUBAI, 127804 Dubai	
TRN	100350218200003
Email	admin@accesskey.me
Contact	Mr SRINIVAS .
Mobile	+971 56 649 1999
Ref	

PURCHASE ORDER DETAILS	
Purchase Order No	GR/SZRT-1088/MPO1/25/00026
Purchase Order Date	28-Feb-2025
Project Name	Sheikh Zayed Road Tower
Request No	GR/SZRT-1088/MRCV/25/00017
Payment Terms	PDC - 30 Days
Delivery Date	05-Mar-2025
Department	

NO	ITEM DESCRIPTION	UOM	QTY	UNIT RATE	NET AMOUNT	DISC%	VAT%	VAT AMT AED	TOTAL AMT AED
1	Gate Barrier Set Automatic Gate Barrier with Remote Control with 6mtr length and 1mtr height & complete accessories(forroad diversion main entrance and exit) AETS DC PRO BARRIER. Reliable Heavy-Duty & Very Intensive Use.01. AETS PRO DC gate barrier 6m mechanical and electrical integrated design. Planetary geardrive, high torque, un-blocked, oil tight, no noise, automatically unlocked when the poweris off, auto reverse built in smart collision detection technology allows arm to autoreverse when hit with an obstacle during closing to prevent further with 10 millionoperation times. Speed can be adjusted based on Run Speed 02s to 04s, Rated voltageAC100V~AC264V, DC24V 50Hz~60Hz, Rated power 50W, the maximum power of 100WWork temperature -40 ~ 75'C, Protection degree IP55 Very intensive use. With tworemotes. 5 Years Warranty including AMC	Nos	3.00						

ORDER TOTAL	
AMOUNT IN WORDS	AED
NOTES	

Prepared By: Bilal Ahmad

Gardinia Building Contracting LLC
P.O.Box 118696, Sheikh Zayed Road, Dubai, U.A.E
United Arab Emirates
info@gardinia.ae
+97143596673
100455659100003

Ship To Address	For Gardinia Building Contracting LLC
Location	
Store Contact	
Mobile No.	

FARHAD AZIZI
CHIEF EXECUTIVE OFFICER

Prepared By: Bilal Ahmad

حكومة دبي
GOVERNMENT OF DUBAI

هيئة المعرفة و التنمية البشرية
KNOWLEDGE & HUMAN DEVELOPMENT AUTHORITY

Standard Purchase Order

Document Number	Rev	
42500073/0	0	

To:
ACCESS KEY AUTOMATIC GATES TRADING L.L.C
Dubai
Dubai, Dubai
United Arab Emirates

Supplier Number: 180941
Contact: -
Tel: - **Fax:** -
Email:

Ship To:
Knowledge and Human Development Authority Block 8 Dubai
International Academic City
500008, Academic City
Dubai, United Arab Emirates

Bill To:
Knowledge and Human Development Authority Block 8 Dubai
International Academic City
500008, Academic City
Dubai, United Arab Emirates

Pay Terms : Net 60
Freight Terms : OTHER
F.O.B. :
Carrier :

Buyer: Ibrahim Al Raeisi
Date: 30-JAN-25

All Prices and amounts on this order are expressed in: UAE Dirham

Sr No	Item Code/Description	Promise Date	UOM	Quantity	Unit Price	Tax Type	VAT Amount	Total Price
1	supply and installation of 4 parking locks for the parking area near the KHDA main gate.	31/01/2025	Each	4		STANDARD		

Purchase Order Amount :	
VAT Amount :	
Grand Total :	
In Word	

This is an electronically generated, officially approved Purchase Order and does not require a manual signature or stamp

Note to Supplier:

Note to Supplier on PO (delivery instructions)

Invoice: Once the deliveries of the goods / services are completed, please immediately upload Tax Invoice copy in iSupplier portal. Please email a COPY of the Delivery Note / Order signed by the receiver and Tax Invoice to Buyer Email and Accounts.Payable@khda.gov.ae. Tax invoice must have our Company Name and TRN 100267612800003, along with your TRN and your complete bank details.

- Terms and conditions for payment: After delivery, 60 days from the invoice date by Purchase Order.
- Payment Mode: Wire Transfer.
- This RFQ / PO is governed by all the terms & conditions stated in Law No. (12) of 2020 Concerning Contracts and of Government Departments in the Emirate of Dubai.
- Kindly issue the Tender Bond/Performance Bond/Advance Payment Guarantee via swift to EmiratesNBD as advising bank.
- Please note that the guarantee will be valid until an NOC is issued by KHDA via swift.
- Please find the below KHDA bank details:
  - Account Name: GOVERNMENT OF DUBAI - Knowledge and Human Development Authority
  - Bank Name: EmiratesNBD
  - Bank Branch: Jebel Ali, Dubai, U.A.E.

Tornado General Contracting LLC
Aradah St. Intersection with Fatima Bint Mubarak St.
Al Nahyan
Abu Dhabi
UAE
P.O. Box 52069
Vat Registration : 100052258900003
Company Registration : CN-1066275

تـــورنـــيـــدوجـــروب
TORNADO GROUP

Subcontractor Order # GCC28822

Subject : **P706-GCCR44221**

Description : **Supply and Installation of Gate Barrier P-706**

To : **ACCESS KEY AUTOMATIC GATES TRADING LLC**

Code : **ACC004S**
Address : DUBAI

Contact : SRINIVASA RAO
Telephone :
Cell Phone : +971 56 649 1999
Email : admin@accesskey.me
Bus. Reg. No :
VAT Number : 100350218200003

Contract : 706-23G

PO Creation Date : 01/08/2024
Required By : 25/07/2024
Req No : GCCR44221
Ordered By : Naeem Khan
Telephone :
Email : naeem@tornado@group.com
Currency : (AED) Dirhams
Payment In : Current

Detail: As Per Attached Mail

Contact : Engr. Amjd Albuhaisi, Tel : 052 494 6381

Delivery Address : Al Dhafrah Region (3 Mosque), ., ., ., .

No	Resource Code	Cost Code	Description	Quantity	Unit	Rate	DISC %	VAT %	Amount
Contract : 706-23G - CONST. FOR MARINE ENVIRONMENT MANAGEMENT									
1	51101050, sPS-020	706-23G, A0220	Supply and Apply of Gate Barrier, AETS PRO DC Gate Barrier 4 Mtr Mechanical and Electrical Integrated Design	2	SET		0.00	5.00	
2	51101050, sPS-020	706-23G, A0220	Supply and Apply of Gate Barrier, AETS PRO DC Gate Barrier 6 Mtr Mechanical and Electrical Integrated Design	1	SET		0.00	5.00	
								Sub Total Amount :	
								VAT Amount :	
								Total Amount :	

This Order is System generated, signature is not required.

MATERIAL SUBMITTAL FORM

Part A: Project & Record Information:			
Project Name	Marine Environment Management & Marine Rehabilitation Center - Al Marfa	MS.Ref.No	400-TGC-MT-CI-00059
Client	Environment Agency - Abu Dhabi	Rev.No	01
Employer	Environment Agency - Abu Dhabi	Darwing Ref.	
PMC	**N/A**	BOQ Ref: if any	
Engineer	Altorath International Engineering Consultants LLC	Approx. Qty	
Contractor	Tornado General Contracting LLC	Submission Date	21-May-25

Part B: Material Submittal Discipline:			
Related Discipline	■ Civil Material	☐ Architectural Material	☐ Electrical Material
	☐ Mechanical Material	☐ Others (Specify):	

Part C: Material Details			Attachment Checklist		
Spec's. Ref.		N/A	1	Compliance checklist	✓
Specified Material		AUTOMATIC GATE BARRIERS (PS Item)	2	Copy of the related specs	✓
			3	Copy of the related drawings	✓
Proposed Material		AUTOMATIC GATE BARRIERS (PS Item)	4	Copy of the related BOQ	
			5	Copy of the related Standards	
Manufacturer's	Name	M/S ACCESS KEY AUTOMATIC GATES TRADING	6	Material Technical Data Sheet	✓
	Address	Dubai	7	Previous test results	✓
Supplier's	Name	M/S ACCESS KEY AUTOMATIC GATES TRADING	8	Warranty	
	Address	Dubai	9	Previous Approvals	✓
Estidama Approval			10	Other Relevant Approvals	✓
Justification of Alternative Material			11	License/s of Manufacturer	✓
Part C: Contractors Review			12	ISO 9001 Certificate	✓

		HSE	QA/QC	Project Manager	13	Sample with Sample Tag	
Name				Amjd Mateed Al Buhisi	14	Estidama Compliance Approval	✓
Signature						Others	
Date				21-May-25		CERTIFICATES	✓

We do certify that the material submitted herewith has been reviewed in details and in accordance with the Contract Documents except as otherwise stated here above.

Part D: Engineers Review / Approval				
No Objection for the proposed material subject to fully comply with the following: - Refer to the Engineer comments listed in attached comment sheet & fully comply with the same. - Country of Origin to provided upon delivery of material - Contractor to fully comply with related project specification, Design drawing & item Description as per BOQ. - Contractor to strictly follow manufacturer recommendation for material storage & installation upon delivery. - Contractor to adhere with project time schedule in related to delivery schedule - MIR to be submitted for Engineer review & approval upon material delivery to site. - Final Approval subject to the acceptance of Warranty Certificate that fully comply with specified warranty period & all related terms & conditions. - Final Approval subject to related Authorities approval if applicable. - Final Approval subject to client approval. - Any Alternative proposal that had been propose by contractor & accepted by Engineer shall be subject to client approval without any additional cost / time impact, while if the proposals are applicable to cost saving the same shall be applied based on the Evaluation carried out by Engineer & client.				
Employer/ Engineer Approval	☐	**A -** Approved	☐	**C -** Revised and resubmit
	☑	**B -** Approved with comments	☐	**D -** Rejected

Note(1): Employer's/ Engineer's approval is for conformance with information given and design concept expressed in Contract Documents. Approval does not authorize changes to Contract Documents. Employer's/ Engineer's approval does not relieve the Contractor from his contractual obligation to ensure conformance to all Contract Documents. Any deviations, to the Contract Documents found subsequent to Employer's/ Engineer's approval are to be corrected by the Contractor at no extra Cost/Time to the Employer.

	Engineer's ME / SE	Engineer's RE	For Employer
Name		Eng. Mohanad Elbana	
Signature			
Date			

Civil Works : Union corrugated packaging industries

Submittal Form

Reference No.	MS/1693/ASIC/CVL/19	Revision No.	01	Date: 11/8/2025

Project Name:	Union corrugated packaging Industries
Location:	Sector No. KHIA4 Plot No. 20, 21, Kizad Abu Dhabi U.A.E.
Client:	Union corrugated packaging Industries
Consultant:	Bainona Engineering Consultancy L.L.C.
Contractor:	Arcade Star International Construction L.L.C

TYPE				DIVISION		SUBMITTED FOR	
Shop Drawing [SD]		Manufacturer's Data [MD]		ARCHITECTURE		APPROVAL	1
Calculation [CA]		Certificates [CT]		CIVIL	X	INFORMATION	2
Material Specification [MS]	X	Test Results [TR]		STRUCTURE		COORDINATION	3
Sample [SP]		Mock Up [MK]		MECHANICAL		ACTION	
Method Statement [MOS]		Others [OT]	X	ELECTRICAL		APPROVED	A
Guarantee [GT]		Subcontractor [SUB]				APPROVED AS NOTED	B
Temporary Facilities [TF]		Bar Bending Schedule [BBS]				REVISE & RESUBMIT	C
						REJECTED	D

S.N.	SUBMITTAL DESCRIPTION		REV.	RELATED DOCUMENT REF NO.	ACTION	INFORMATION	E
1	**Material Submission For AETS DC Pro Gate Barrier**		01	ASIC-P174-MS-19		**Quantity**	
	Manufacturer / Supplier :	Access key automatic gates trading				Hard Copy	Soft Copy
	Brand Name:	AETS DC Pro					X
	Country of Origin:						
	BOQ Ref. / Clause No.:						

Name & Signature: Jasmeen Singh

Date: 11/08/2025

Consultant Comments

- Warranty shall be from the TOC and the duration shall be as per the client requirements.
- Interface with FA, BMS and ACS shall be considered.
- Ensure anti collide system and breakway mechanism are provided.
- Details to be provided for battery backup during emergency.
- Emergency manual disconnect switch shall be provided
- 2 remotes shall be provided for each barrier.
- Boom length shall comply with the gate opening (10 meters gate opening).
- COO and BOL to be provided at the time of material delivery.
- Final approval subject to testing & commissioning and handing over to the client.

Name & Signature: Shahzad Javid

Date: 18/8/2025

BAINONA Engineering Consultancy Project 1693 Sector No. KHIA4 Plot No. 20, 21, 25 & 26 Kizad Abu Dhabi

Client Comments

Name & Signature:

Date:

ROUTING

Received by **BAINONA** from **CONTRACTOR**	Received by **CLIENT** from **BAINONA**
Receiver Name	Receiver Name
Designation	Designation
Date	Date
Signature	Signature
Received by **BAINONA** from **CLIENT**	Received by **CONTRACTOR** from **BAINONA**
Receiver Name	Receiver Name
Receiver	Designation
Date	Date
Signature	Signature

Signature ARCHITECTURE . INTERIOR ENGINEERING . PLANNING .	**PROJECT :WEST ZONE COLD STORE (B+G+1)** **LOCATION : NADD AL HAMAR** **PLOT NO : 416031**	West Zone GROUP BUILDING CONTRACTING

Material Approval Submittal

MAS Ref. No.	**MAS-WZ-CS-16-REV-01**	*Date :*	**21/05/2025**
Rev. No.		*Sample tag Ref. No.*	***ACCESS KEY L.L.C***

Discipline : ☐ Architectural ☐ Structural ☐ Mechanical ☐ Electrical ☐ Plumbing ☐ Fire Protection. ☑ Others.

Material Details

Item Description :	*GATE BARRIER*	*BOQ Item No. :*	
Name of Material :	*AETS DC GATE BARRIER*	*Reference Spec. Clause:*	
Location of intended use :	***GROUND FLOOR***	*Drawing Ref: :*	
Manufacturer / Local Supplier :	*ACCESS KEY AUTOMATIC GATE TRADINGS L.L.C*	*Country of Orgin :*	***U.A.E***

Reason for Submittal : ☑ For Approval ☐ For Information ☐ Others ( )

Remarks : ☑ As per Original ☐ Alternative

Attachments : ☐ Drawing ☑ Spec. ☐ Sample ☐ Catalog ☐ Others ( )

For Contractor				***Receipt Acknowledged by Signature***
Prepared by Material Engineer :	……	*Signature:* ……	*Date:* ……	*Received By :* ……
Checked by QA Manager :	……	*Signature:* ……	*Date:* ……	*Date :* ……
Project Engineer Contractor:	……ER.SEEIVASAN……	*Signature:* ……	*Date:* …21/05/2025…	*Time :* ……
Project Manager Contractor:	……	*Signature:* ……	*Date:* ……	

Engineer's Review & Comments :

Approved as noted:

1- No objection for the proposed brand AETS supplied by M/s Accesskey
2- Coordinate with MEP subcontractor for all first fix requirements
3- Coordinate for fire alarm cause and effect matrix and interfaces
4- MIR shall be submitted for all delivered materials at site
5- Final approval subject to T&C

Returned to Contractor with Status :

☐ A : Approved ☑ B: Approved as noted ☐ C: Revise / Resubmit ☐ D: Information

For Engineer		***Receipt Acknowledged by Contractor***
Signature :	Eng. Mohamed Ali	*Received by :* ……
Date :	26-05-2025	*Date:* ……

Crown Prime Electromechanical Engineering SP 1980 UAE Dubai, P.O.Box: 182984

Distribution : ☐ Employer ☐ Project Manager ☐ Cost Mangement ☐ Arch. Sub Consultant ☐ other ( )

شركة هاربور لمقاولات البناء- ذ.م.م

HARBOUR BUILDING CONT CO L.L.C

Local Purchase Order

PO No.: HBC-IWIA-PO-2026-015

Date: 25 January 2026

The Purchase Order (LPO) is hereby issued to

Mr/Ms: ACCESS KEY AUTOMATIC GATES TRADING LLC (the Supplier)

Address: The Kanoo Group BLDG, Bur Dubai, office 12, Dubai - UAE

Contact Person: Gani **Contact No.:** +971 50 172 5959

Email: accesskey@accesskey.ae

for the provision of materials, equipment and/or services for Al Maktoum International Airport Project, whose Project Site is located at AL MAKTOUM INTERNATIONAL AIRPORT, Dubai, UAE in accordance with the terms and conditions set forth below:

1. Supply Description

S#	Description	Qty.	Unit	Unit Price (AED)	Amount (AED)
1	SUPPLY AND INSTALLATION OF AETS DC 6M BARRIER	2	Set		
				Amount without VAT (AED)	
				VAT (5%)	
				Total Amount with VAT (AED)	

2. Delivery Terms

Delivery Term: to be made by the Supplier to the Project Site.

Delivery Time: Within 07 (seven) days after LPO and payment.

Delivery Documents: delivery note, quality warranty, factory test report, etc.

3. Payment Terms

3.1 80% payment advancement payment with LPO.

3.2 A formal tax invoice for the full contract amount must be submitted to the Buyer before the payment is settled.

3.3 Buyer's information for invoicing:

Invoice Title: Harbour Building Cont Co L.L.C

VAT No：100338774100003

Project location : AL MAKTOUM INTERNATIONAL AIRPORT，Dubai，UAE

3.4 The Tax Invoice shall be written in English and be priced in Dirham.

3.5 The Tax Invoice and receipt shall be signed and stamped by the supplier.

ADD: AL ANWAR TOWER, OFFICE NO 105, NAUIMEYA 3 AJMAN RING ROAD AJMAN U.A.E
PO BOX 15025, TEL: 06 7410784, EMAIL: harbour.cmhg@gmail.com

4. Quality and Warranty

The quality of the material should comply with the specifications submitted and approved.

5. Governing Law & Dispute Resolution

Governing Law: United Arab Emirates (UAE) Law.

Dispute Resolution: Any dispute shall be resolved through friendly negotiation or, if unresolved, submitted to Dubai International Arbitration Centre (DIAC) for arbitration in accordance with its rules, in the English language.

6. Others

6.1 Any matter not expressly provided for in this LPO shall be governed by the latest version of the UAE Civil Code;

6.2 This PO and the Supplier's written acceptance (signed & stamped or email confirmation) constitute a binding contract.

7. Signature

Buyer:

Name: _____

Title: _____

Signature & Stamp: _____

Supplier (to confirm):

Name: _____

Title: _____

Signature & Stamp: _____

Date: _____

ADD: AL ANWAR TOWER, OFFICE NO 105, NAUIMEYA 3 AJMAN RING ROAD AJMAN U.A.E
PO BOX 15025, TEL: 06 7410784, EMAIL: harbour.cmhg@gmail.com

GÜNAL
Construction DUBAI

PURCHASE ORDER

P. O. # : MNG-R1121/1-0089

INVOICE / SHIP TO
GUNAL CONSTRUCTION TRADING & INDUSTRY CO. P.O. BOX 115602 DUBAI, UAE

PROJECT RTA 1121/1

ATTENTION	MR. GANI- 050 172 5959
VENDOR	**M/S ACCESS KEY AUTOMATIC GATES TRADING LLC**
FAX #	
TEL #	04 255 4590

OUR PHONE #	**04 882 1099**		
OUR FAX #	**04 882 1603**		
DUE DATE	20-May-2026	P.O. DATE	20-May-2026
YOUR REF. #	**AK-QT-010254 R1**		
OUR REF. #	**MNG-R1121/1-0089**	**TRN:100214177600003**	

We are hereby placing with your goodselves an order for the goods listed hereunder, subject to and as per the terms and conditions contained herein, attached hereto, all of which shall constitute an agreement between **GUNAL CONSTRUCTION TRADING & INDUSTRY CO**. and the **VENDOR**.
You are kindly requested to acknowledge receipt and acceptance of this Purchase Order by return fax or email.

ITEM NO	DESCRIPTION	COST CODE	UNIT	QTY	UNIT PRICE	TOTAL
1	**AETS DC PRO BARRIER GATE WITH MECHANICAL & ELECTRICAL INTEGRATED DESIGN**	1.010	NO	3		
	1.SITE OFFICE ENTRANCE- 5 MTR 2.PARKING ENTRANCE (METRO VIADUCT)-6MTRS 3.PARKING EXIT (METRO VIADUCT)-5 MTRS					
	SPECS: -SPEED CAN BE ADJUSTED BASED ON ARM LGT RUN SPEED 2S TO 6S -RATED VOLTAGE AC100V-AC26AV, DC24V 50Hz-60Hz, -RATED POWER 50W -MAX POWER OF 100W -WORK TEMP -40-75'C - TELESCOPE ARM 6M, WITH RED REFLECTIVE -2 REMOTES WORKS 10 TO 30MTRS -ARM BOTTOM RUBBER 6M(CRUSH/DENT PROTECTION) -RECEIVER 12/24V 433MHz -LED LIGHTS 12V UP TO 6M OPEN GREEN,CLOSE RED WITH ARM ACCESORIES -SUPPLY & INSTALLATION AND PROGRAMMING ,TESTING & COMMISSIONING					
2	PHOTOCELL STAND	1.010	NO	3		
	WARRANTY: 3 YEARS					
	"FOR RA/RPD/25-13889 | DESIGN AND CONSTRUCTION FOR BURJ KHALIFA / DUBAI MALL METRO STATION EXPANSION PROJECT"					
	NOTE: VAT CHARGES WILL ONLY BE APPLICABLE WITH REGISTERED TRN INDICATED ON SUPPLIER'S INVOICES.					

PLEASE ATTACH LPO COPY & COMPLIANCE CERTIFICATE ON DELIVERY NOTES.

TOTAL	
DISCOUNT	
VAT 5%	
GRAND TOTAL	

FMR-MNG-RA/RPD/25-13889- 0039 (FOR BURJ KHALIFA|DUBAI MALL METRO PROJ)

NOTES: **PRICES INCLUDES DELIVERY & WARRANTY**

Upon arrival of goods please NOTIFY : **Ms. Maricel RAMIREZ/ Mr. Niyazi BAYRAKTAR**
Procurement and Logistics Dept. **Procurement & Logistic Officer / Warehouse In-Charge**
Cell Phone 055 956 0817 / 055 956 0805

Payment Terms : 30 DAYS AFTER DATE OF INVOICE

Delivery Terms: **AS PER SITE REQUIREMENT**

Prepared by: **Mitche Pepito**

Notify address is same as invoice address.

Delivery Address :BURJ KHALIFA/DUBAI MALL METRO STATION EXPANSION PROJECT

APPROVED BY	Yasar UZUN
TITLE	Procurement Manager
SIGNATURE	
DATE	20 May 2026

APPROVED BY	Manoj YADAV
TITLE	Deputy Project Manager
SIGNATURE	
DATE	20 May 2026

APPROVED BY	Mehmet EKIM
TITLE	Project Manager
SIGNATURE	
DATE	20 May 2026

Section6: Test Reports

Test report

T-25513077-14-R1

Verify Report

Overall result — Pass

Please refer to the following pages for test result summary and notes.

Client information

Client: AETS AUTOMATIC PARKING SYSTEMS MANUFACTURING FZE

Address: Gate-1-Warehouse Block-G3,Wahehouse-G1-26Aiman Free Zone, Aiman, United Arab Emirates



Sample information

Description: DC PRO & DC PRO36 BARRIER GATE

Country of origin: United Arab Emirates (UAE)

Country of distribution: UAE, GCC Countries, European Union (EU),India, and African Countries

Quantity submitted: 3 sets

Labeled age grade: -

Tested age grade: -

Brand name: AETS-AGMATIC

General information

Sample receipt date: 26-Aug-2025

Testing period: 26-Aug-2025 to 22-Sep-2025

Report date: 15-Jul-2026

QIMA Testing (Shanghai) Limited

Macy Weng

Technical Consultant

Result summary

At the request of the client, the following test were conducted:

Test(s) conducted	Conclusion
EN 60335-1:2012+A11:2014+A13:2017+A1:2019+A14:2019+A2:2019+A15:2021+A16:2023	Pass
EN 62233:2008	Pass

Detailed results

Clause	Requirement + Test	Result - Remark	Verdict
5	**GENERAL CONDITIONS FOR THE TESTS**		--
	Tests performed according to clause 5, e.g. nature of supply, sequence of testing, etc.		P
6	**CLASSIFICATION**		--
6.1	Protection against electric shock: Class 0, 0I, I, II, III .... :	Class I	P
	For a class III construction with a detachable power supply part the appliance is classified according to the detachable power supply part		N/A
6.2	Protection against harmful ingress of water	IP55	P
7	**MARKING AND INSTRUCTIONS**		--
7.1	Rated voltage or voltage range (V) .... :	Details see Copy of marking plate	P
	Symbol for nature of supply, or .... :	Details see Copy of marking plate	P
	Rated frequency (Hz) .... :	Details see Copy of marking plate	P
	Rated power input (W), or .... :	Details see Copy of marking plate	P
	Rated current (A) .... :		N/A
	Manufacturer's or responsible vendor's name, trademark or identification mark .... :	Details see Copy of marking plate	P
	Model or type reference .... :	Details see Copy of marking plate	P
	Symbol IEC 60417-5172, for class II appliances		N/A
	IP number, other than IPX0 .... :	IP55	P
	Symbol IEC 60417-5180, for class III appliances, unless		N/A
	the appliance is operated by batteries only, or		N/A
	for appliances powered by rechargeable batteries recharged in the appliance		N/A
	Symbol IEC 60417-5018, for class II and class III appliances incorporating a functional earth		N/A
	Symbol IEC 60417-5036, for the enclosure of electrically-operated water valves in external hose-sets for connection of an appliance to the water mains, if the working voltage exceeds extra-low voltage		N/A
7.2	Warning for stationary appliances for multiple supply		N/A

Clause	Requirement + Test	Result - Remark	Verdict
	Warning placed in vicinity of terminal cover		N/A
7.3	Range of rated values marked with the lower and upper limits separated by a hyphen		P
	Different rated values marked with the values separated by an oblique stroke		N/A
7.4	Appliances adjustable for different rated voltages or rated frequencies, the voltage or the frequency setting is clearly discernible		N/A
	Requirement met if frequent changes are not required and the rated voltage or rated frequency to which the appliance is to be adjusted is determined from a wiring diagram		N/A
7.5	Appliances with more than one rated voltage or one or more rated voltage ranges, marked with rated input or rated current for each rated voltage or range, unless		N/A
	the power input or current are related to the arithmetic mean value of the rated voltage range		N/A
	Relation between marking for upper and lower limits of rated power input or rated current and voltage is clear		N/A
7.6	Correct symbols used		P
	Symbol for nature of supply placed next to rated voltage		P
	Symbol for class II appliances placed unlikely to be confused with other marking		N/A
	Units of physical quantities and their symbols according to international standardized system		P
7.7	Connection diagram fixed to appliances to be connected to more than two supply conductors and appliances for multiple supply, unless		N/A
	correct mode of connection is obvious		N/A
7.8	Except for type Z attachment, terminals for connection to the supply mains indicated as follows:		--
	- marking of terminals exclusively for the neutral conductor (letter N)		P
	- marking of protective earthing terminals (symbol IEC 60417-5019)		P
	- marking of functional earthing terminals (symbol IEC 60417-5018)		N/A
	- marking not placed on removable parts		P
7.9	Marking or placing of switches which may cause a hazard		N/A
7.10	Indications of switches on stationary appliances and controls on all appliances by use of figures, letters or other visual means .... :		N/A

Clause	Requirement + Test	Result - Remark	Verdict
	This applies also to switches which are part of a control		N/A
	If figures are used, the off position indicated by the figure 0		N/A
	The figure 0 indicates only OFF position, unless no confusion with the OFF position		N/A
7.11	Indication for direction of adjustment of controls		P
7.12	Instructions for safe use provided		P
	Details concerning precautions during user maintenance		P
	The instructions state that:		P
	- the appliance is not to be used by persons (including children) with reduced physical, sensory or mental capabilities, or lack of experience and knowledge, unless they have been given supervision or instruction	Replace by EN 60335-1	N/A
	- children being supervised not to play with the appliance	Replace by EN 60335-1	N/A
	For a part of class III construction supplied from a detachable power supply unit, the instructions state that the appliance is only to be used with the unit provided		N/A
	Instructions for class III appliances state that it must only be supplied at SELV, unless		N/A
	it is a battery-operated appliance, the battery being charged outside the appliance		N/A
	For appliances for altitudes exceeding 2000 m, the maximum altitude is stated..... ..... :		N/A
	The instructions for appliances incorporating a functional earth states that the appliance incorporates an earth connection for functional purposes only		N/A
7.12.1	Sufficient details for installation supplied		P
	For an appliance intended to be permanently connected to the water mains and not connected by a hose-set, this is stated		N/A
	If different rated voltages or different rated frequencies are marked, the instructions state what action to be taken to adjust the appliance		N/A
7.12.2	Stationary appliances not fitted with means for disconnection from the supply mains having a contact separation in all poles that provide full disconnection under overvoltage category III, the instructions state that means for disconnection must be incorporated in the fixed wiring in accordance with the wiring rules		P
7.12.3	Insulation of the fixed wiring in contact with parts exceeding 50 K during clause 11; instructions state that the fixed wiring must be protected		N/A
7.12.4	Instructions for built-in appliances:		N/A

Clause	Requirement + Test	Result - Remark	Verdict
	- dimensions of space		N/A
	- dimensions and position of supporting and fixing		N/A
	- minimum distances between parts and surrounding structure		N/A
	- minimum dimensions of ventilating openings and arrangement		N/A
	- connection to supply mains and interconnection of separate components		N/A
	- allow disconnection of the appliance after installation, by accessible plug or a switch in the fixed wiring, unless		N/A
	a switch complying with 24.3		N/A
7.12.5	Replacement cord instructions, type X attachment with a specially prepared cord		N/A
	Replacement cord instructions, type Y attachment		N/A
	Replacement cord instructions, type Z attachment		N/A
7.12.6	Caution in the instructions for appliances incorporating a non-self-resetting thermal cut-out that is reset by disconnection of the supply mains, if this cut-out is required to comply with the standard		N/A
7.12.7	Instructions for fixed appliances stating how the appliance is to be fixed		P
7.12.8	Instructions for appliances connected to the water mains:		N/A
	- max. inlet water pressure (Pa) .... :		N/A
	- min. inlet water pressure, if necessary (Pa) .... :		N/A
	Instructions concerning new and old hose-sets for appliances connected to the water mains by detachable hose-sets		N/A
7.12.9	Instructions specified in 7.12 and from 7.12.1 to 7.12.8 appear together before any other instructions supplied with the appliance		P
	These instructions may be supplied with the appliance separately from any functional use booklet		P
	They may follow the description of the appliance that identifies parts, or follow the drawings/sketches		P
	In addition, instructions are also available in an alternative format such as on a website or on request from the user in a format such as a DVD		P
	In addition, instructions are also available in an alternative format such as on a website or in a format such as a DVD .... :	On website	P

Clause	Requirement + Test	Result - Remark	Verdict
7.13	Instructions and other texts in an official language		P
7.14	Markings clearly legible and durable:		P
	Signal words WARNING, CAUTION, DANGER in uppercase having a height as specified..... ..... :		N/A
	Uppercase letter of the text explaining the signal word not smaller than 1,6 mm .... :		N/A
	Moulded in, engraved, or stamped markings either raised above or have a depth below the surface of at least 0,25 mm, unless		N/A
	contrasting colours are used		N/A
	Markings checked by inspection, measurement and rubbing test as specified		P
7.15	Markings on a main part		P
	Marking clearly discernible from the outside, if necessary after removal of a cover		N/A
	For portable appliances, cover can be removed or opened without a tool		N/A
	For stationary appliances, name, trademark or identification mark and model or type reference visible after installation		P
	For fixed appliances, name, trademark or identification mark and model or type reference visible after installation according to the instructions		P
	Indications for switches and controls placed on or near the components. Marking not on parts which can be positioned or repositioned in such a way that the marking is misleading		N/A
	The symbol IEC 60417-5018 placed next to the symbol IEC 60417-5172 or IEC 60417-5180		N/A
7.16	Marking of a possible replaceable thermal link or fuse link clearly visible with regard to replacing the link		P
8	**PROTECTION AGAINST ACCESS TO LIVE PARTS**		--
8.1	Adequate protection against accidental contact with live parts		P
8.1.1	Requirement applies for all positions, detachable parts removed		P
	Lamps behind a detachable cover not removed, if conditions met		N/A
	Insertion or removal of lamps, protection against contact with live parts of the lamp cap		N/A
	Use of test probe B of IEC 61032, with a force not exceeding 1 N: no contact with live parts		P

Clause	Requirement + Test	Result - Remark	Verdict
	Use of test probe B of IEC 61032 through openings, with a force of 20N: no contact with live parts		N/A
8.1.2	Use of test probe 13 of IEC 61032, with a force not exceeding 1 N, through openings in class 0 appliances and class II appliances/constructions: no contact with live parts		P
	Test probe 13 also applied through openings in earthed metal enclosures having a non-conductive coating: no contact with live parts		P
8.1.3	For appliances other than class II, use of test probe 41 of IEC 61032, with a force not exceeding 1 N: no contact with live parts of visible glowing heating elements or supporting parts		N/A
	For a single switching action obtained by a switching device, requirements as specified		N/A
	For appliances with a supply cord and without a switching device, the single switching action may be obtained by the withdrawal of the plug		N/A
8.1.4	Accessible part not considered live if:		N/A
	- safety extra-low a.c. voltage: peak value not exceeding 42.4 V		N/A
	- safety extra-low d.c. voltage: not exceeding 42.4 V		N/A
	- or separated from live parts by protective impedance		N/A
	If protective impedance: d.c. current not exceeding 2 mA, and		N/A
	a.c. peak value not exceeding 0.7 mA		N/A
	- for peak values over 42.4 V up to and including 450 V, capacitance not exceeding 0,1 µF		N/A
	- for peak values over 450 V up to and including 15 kV, discharge not exceeding 45 µC		N/A
	- for peak values over 15kV, the energy in the discharge not exceeding 350 mJ		N/A
8.1.5	Live parts protected at least by basic insulation before installation or assembly:		--
	- built-in appliances		N/A
	- fixed appliances		P
	- appliances delivered in separate units		N/A
8.2	Class II appliances and constructions constructed so that there is adequate protection against accidental contact with basic insulation and metal parts separated from live parts by basic insulation only		P
	Only possible to touch parts separated from live parts by double or reinforced insulation		P
9	**STARTING OF MOTOR-OPERATED APPLIANCES**		**--**

Clause	Requirement + Test	Result - Remark	Verdict
	Requirements and tests are specified in part 2 when necessary		N/A
10	**POWER INPUT AND CURRENT**		--
10.1	Power input at normal operating temperature, rated voltage and normal operation not deviating from rated power input by more than shown in table 1..... :	(see appended table)	P
	If the power input varies throughout the operating cycle and the maximum value of the power input exceeds, by a factor greater than two, the arithmetic mean value of the power input occurring during a representative period, the power input is the maximum value that is exceeded for more than 10 % of the representative period		N/A
	Otherwise the power input is the arithmetic mean value		N/A
	Test carried out at upper and lower limits of the ranges for appliances with one or more rated voltage ranges, unless		P
	the rated power input is related to the arithmetic mean value		N/A
10.2	Current at normal operating temperature, rated voltage and normal operation not deviating from rated current by more than shown in table 2..... :	(see appended table)	N/A
	If the current varies throughout the operating cycle and the maximum value of the current exceeds, by a factor greater than two, the arithmetic mean value of the current occurring during a representative period, the current is the maximum value that is exceeded for more than 10 % of the representative period		N/A
	Otherwise the current is the arithmetic mean value		N/A
	Test carried out at upper and lower limits of the ranges for appliances with one or more rated voltage ranges, unless		N/A
	the rated current is related to the arithmetic mean value of the range		N/A
11	**HEATING**		--
11.1	No excessive temperatures in normal use		P
11.2	The appliance is held, placed or fixed in position as described..... :		P
11.3	Temperature rises, other than of windings, determined by thermocouples		P
	Temperature rises of windings determined by resistance method, unless		P
	the windings are non-uniform or it is difficult to make the necessary connections		P

Clause	Requirement + Test	Result - Remark	Verdict
11.4	Heating appliances operated under normal operation at 1.15 times rated power input (W) ..... :		N/A
11.5	Motor-operated appliances operated under normal operation at most unfavourable voltage between 0.94 and 1.06 times rated voltage (V) ..... :		P
11.6	Combined appliances operated under normal operation at most unfavourable voltage between 0.94 and 1.06 times rated voltage (V) ..... :		N/A
11.7	Operation duration corresponding to the most unfavourable conditions of normal use		P
11.8	Temperature rises monitored continuously and not exceeding the values in table 3 ..... :	(see appended table)	P
	If the temperature rise of a motor winding exceeds the value of table 3, or		N/A
	if there is doubt with regard to classification of insulation,		N/A
	tests of Annex C are carried out		N/A
	Sealing compound does not flow out		P
	Protective devices do not operate, except		P
	components in protective electronic circuits tested for the number of cycles specified in 24.1.4		N/A
13	**LEAKAGE CURRENT AND ELECTRIC STRENGTH AT OPERATING TEMPERATURE**		--
13.1	Leakage current not excessive and electric strength adequate		P
	Heating appliances operated at 1.15 times the rated power input (W) ..... :		N/A
	Motor-operated appliances and combined appliances supplied at 1.06 times the rated voltage (V) ..... :		P
	Protective impedance and radio interference filters disconnected before carrying out the tests		N/A
13.2	The leakage current is measured by means of the circuit described in Figure 4 of IEC 60990:1999		P
	For class 0I appliances and class I appliances, except parts of class II construction, C may be replaced by a low impedance ammeter		N/A
	Leakage current measurements ..... :	(see appended table)	P
13.3	The appliance is disconnected from the supply		P
	Electric strength tests according to table 4 ..... :	(see appended table)	P
	No breakdown during the tests		P
14	**TRANSIENT OVERVOLTAGES**		--

Clause	Requirement + Test	Result - Remark	Verdict
	Appliances withstand the transient over-voltages to which they may be subjected		N/A
	Clearances having a value less than specified in table 16 subjected to an impulse voltage test, the test voltage specified in table 6 ..... :	(see appended table)	N/A
	No flashover during the test, unless		N/A
	of functional insulation if the appliance complies with clause 19 with the clearance short-circuited		N/A
15	**MOISTURE RESISTANCE**		--
15.1	Enclosure provides the degree of moisture protection according to classification of the appliance	IP55	P
	Compliance checked as specified in 15.1.1, taking into account 15.1.2, followed by the electric strength test of 16.3		P
	No trace of water on insulation which can result in a reduction of clearances or creepage distances below values specified in clause 29		P
15.1.1	Appliances, other than IPX0, subjected to tests as specified in IEC 60529 ..... :		P
	Water valves containing live parts in external hoses for connection of an appliance to the water mains tested as specified for IPX7 appliances		N/A
15.1.2	Hand-held appliance turned continuously through the most unfavourable positions during the test		N/A
	Built-in appliances installed according to the instructions		N/A
	Appliances placed or used on the floor or table placed on a horizontal unperforated support		P
	Appliances normally fixed to a wall and appliances with pins for insertion into socket-outlets are mounted on a wooden board		N/A
	For IPX3 appliances, the base of wall mounted appliances is placed at the same level as the pivot axis of the oscillating tube		N/A
	For IPX4 appliances, the horizontal centre line of the appliance is aligned with the pivot axis of the oscillating tube, and		N/A
	for appliances normally used on the floor or table, the movement is limited to two times 90° for a period of 5 min, the support being placed at the level of the pivot axis of the oscillating tube		N/A
	Wall-mounted appliances, take into account the distance to the floor stated in the instructions		N/A

Clause	Requirement + Test	Result - Remark	Verdict
	Appliances normally fixed to a ceiling are mounted underneath a horizontal unperforated support, the pivot axis of the oscillating tube located at the level of the underside of the support, and		N/A
	for IPX4 appliances, the movement of the tube is limited to two times 90° from the vertical for a period of 5 min		N/A
	Appliances with type X attachment fitted with a flexible cord as described		N/A
	Detachable parts subjected to the relevant treatment with the main part		N/A
	However, if a part has to be removed for user maintenance and a tool is needed, this part is not removed		N/A
15.2	Spillage of liquid does not affect the electrical insulation		N/A
	Spillage solution comprising water containing approximately 1 % NaCl and 0,6 % rinsing agent		N/A
	Appliances with type X attachment fitted with a flexible cord as described		N/A
	Appliances incorporating an appliance inlet tested with or without an connector, whichever is most unfavourable		N/A
	Detachable parts are removed		N/A
	Overfilling test with additional amount of the solution, over a period of 1 min (l) ..... :		N/A
	The appliance withstands the electric strength test of 16.3		N/A
	No trace of water on insulation that can result in a reduction of clearances or creepage distances below values specified in clause 29		N/A
15.3	Appliances proof against humid conditions		P
	Checked by test Cab: Damp heat steady state in IEC 60068-2-78		P
	Detachable parts removed and subjected, if necessary, to the humidity test with the main part		P
	Humidity test for 48 h in a humidity cabinet		P
	Reassembly of those parts that may have been removed		N/A
	The appliance withstands the tests of clause 16		P
16	**LEAKAGE CURRENT AND ELECTRIC STRENGTH**		--
16.1	Leakage current not excessive and electric strength adequate		P
	Protective impedance disconnected from live parts before carrying out the tests		N/A

Clause	Requirement + Test	Result - Remark	Verdict
	Tests carried out at room temperature and not connected to the supply		P
16.2	Single-phase appliances: test voltage 1.06 times rated voltage (V) ..... :		P
	Three-phase appliances: test voltage 1.06 times rated voltage divided by √3 (V)..... :		N/A
	Leakage current measurements..... :	(see appended table)	N/A
	Limit values doubled if:		N/A
	- all controls have an off position in all poles, or		N/A
	- the appliance has no control other than a thermal cut-out, or		N/A
	- all thermostats, temperature limiters and energy regulators do not have an off position, or		N/A
	- the appliance has radio interference filters		N/A
	With the radio interference filters disconnected, the leakage current do not exceed limits specified ..... :	(see appended table)	N/A
16.3	Electric strength tests according to table 7 ..... :	(see appended table)	P
	Test voltage applied between the supply cord and inlet bushing and cord guard and cord anchorage as specified ..... :	(see appended table)	P
	No breakdown during the tests		P
17	**OVERLOAD PROTECTION OF TRANSFORMERS AND ASSOCIATED CIRCUITS**		--
	No excessive temperatures in transformer or associated circuits in event of short-circuits likely to occur in normal use ..... :	(see appended table)	P
	Appliance supplied with 1.06 or 0.94 times rated voltage under the most unfavourable short-circuit or overload likely to occur in normal use (V) ..... :	1.06 times rated voltage	P
	Basic insulation is not short-circuited		P
	Temperature rise of insulation of the conductors of safety extra-low voltage circuits not exceeding the relevant value specified in table 3 by more than 15 K		N/A
	Temperature of the winding not exceeding the value specified in table 8		P
	However, limits do not apply to fail-safe transformers complying with sub-clause 15.5 of IEC 61558-1		N/A
18	**ENDURANCE**		--
	Requirements and tests are specified in part 2 when necessary		N/A
19	**ABNORMAL OPERATION**		--

Clause	Requirement + Test	Result - Remark	Verdict
19.1	The risk of fire, mechanical damage or electric shock under abnormal or careless operation obviated		P
	Electronic circuits so designed and applied that a fault will not render the appliance unsafe ..... :	(see appended table)	P
	Appliances incorporating heating elements subjected to the tests of 19.2 and 19.3, and		N/A
	if the appliance also has a control that limit the temperature during clause 11 it is subjected to the test of 19.4, and		N/A
	if applicable, to the test of 19.5		N/A
	Appliances incorporating PTC heating elements are also subjected to the test of 19.6		N/A
	Appliances incorporating motors subjected to the tests of 19.7 to 19.10, as applicable		P
	Appliances incorporating electronic circuits subjected to the tests of 19.11 and 19.12, as applicable		P
	Appliances incorporating contactors or relays subjected to the test of 19.14, being carried out before the tests of 19.11		N/A
	Appliances incorporating voltage selector switches subjected to the test of 19.15		N/A
	Unless otherwise specified, the tests are continued until a non-self-resetting thermal cut-out operates, or		N/A
	until steady conditions are established		P
	If a heating element or intentionally weak part becomes open-circuited, the relevant test is repeated on a second sample		N/A
19.2	Test of appliances with heating elements with restricted heat dissipation; test voltage (V), power input of 0.85 times rated power input (W)..... :		N/A
19.3	Test of 19.2 repeated; test voltage (V), power input of 1.24 times rated power input (W)..... :		N/A
19.4	Test conditions as in clause 11, any control limiting the temperature during tests of clause 11 short-circuited		N/A
19.5	Test of 19.4 repeated on Class 0I and I appliances with tubular sheathed or embedded heating elements. No short-circuiting, but one end of the element connected to the sheath		N/A
	The test repeated with reversed polarity and the other end of the heating element connected to the sheath		N/A
	The test is not carried out on appliances intended to be permanently connected to fixed wiring and on appliances where an all-pole disconnection occurs during the test of 19.4		N/A

Clause	Requirement + Test	Result - Remark	Verdict
19.6	Appliances with PTC heating elements tested at rated voltage, establishing steady conditions		N/A
	The working voltage of the PTC heating element is increased by 5% and the appliance is operated until steady conditions are re-established. The voltage is then increased in similar steps until 1.5 times working voltage or until the PTC heating element ruptures (V) ..... :		N/A
19.7	Stalling test by locking the rotor if the locked rotor torque is smaller than the full load torque, or		N/A
	locking moving parts of other appliances		P
	Locked rotor, capacitors open-circuited one at a time		N/A
	Test repeated with capacitors short-circuited one at a time, unless		N/A
	the capacitor is of class S2 or S3 of IEC 60252-1		N/A
	Appliances with timer or programmer supplied with rated voltage for each of the tests, for a period equal to the maximum period allowed..... :		N/A
	An electronic timer or programmer that operates to ensure compliance with the test before the maximum period under the conditions of Clause 11 is reached, is a protective electronic circuit		N/A
	Other appliances supplied with rated voltage for a period as specified ..... :	240	P
	Winding temperatures not exceeding values specified in table 8..... :	(see appended table)	P
19.8	Multi-phase motors operated at rated voltage with one phase disconnected		N/A
19.9	Running overload test on appliances incorporating motors intended to be remotely or automatically controlled or liable to be operated continuously		P
	Motor-operated and combined appliances for which 30.2.3 is applicable and that use overload protective devices relying on electronic circuits to protect the motor windings, are also subjected to the test		N/A
	Winding temperatures not exceeding values as specified ..... :	(see appended table)	N/A
19.10	Series motor operated at 1.3 times rated voltage for 1 min (V) ..... :		N/A
	During the test, parts not being ejected from the appliance		N/A
19.11	Electronic circuits, compliance checked by evaluation of the fault conditions specified in 19.11.2 for all circuits or parts of circuits, unless		P

Clause	Requirement + Test	Result - Remark	Verdict
	they comply with the conditions specified in 19.11.1		P
	Appliances incorporating an electronic circuit that relies upon a programmable component to function correctly, subjected to the test of 19.11.4.8, unless		N/A
	restarting does not result in a hazard		N/A
	Appliances having a device with an off position obtained by electronic disconnection, or a device placing the appliance in a stand-by mode, subjected to the tests of 19.11.4		N/A
	If the safety of the appliance under any of the fault conditions depends on the operation of a miniature fuse-link complying with IEC 60127, the test of 19.12 is carried out		N/A
	During and after each test the following is checked:		N/A
	- the temperature of the windings do not exceed the values specified in table 8		N/A
	- the appliance complies with the conditions specified in 19.13		N/A
	- any current flowing through protective impedance not exceeding the limits specified in 8.1.4		N/A
	If a conductor of a printed board becomes open-circuited, the appliance is considered to have withstood the particular test, provided both of the following conditions are met:		N/A
	- the base material of the printed circuit board withstands the test of Annex E		N/A
	- any loosened conductor does not reduce clearance or creepage distances between live parts and accessible metal parts below the values specified in clause 29		N/A
19.11.1	Fault conditions a) to g) in 19.11.2 are not applied to circuits or parts of circuits meeting both of the following conditions:		P
	- the electronic circuit is a low-power circuit, that is, the maximum power at low-power points does not exceed 15 W according to the tests specified		P
	- the protection against electric shock, fire hazard, mechanical hazard or dangerous malfunction of other parts of the appliance does not rely on the correct functioning of the electronic circuit		P
19.11.2	Fault conditions applied one at a time, the appliance operating under conditions specified in clause 11, but supplied at rated voltage, duration of the tests as specified:		P
	a) short circuit of functional insulation if clearances or creepage distances are less than the values specified in clause 29		P
	b) open circuit at the terminals of any component		P
	c) short circuit of capacitors, unless		P
	they comply with IEC 60384-14		P

Clause	Requirement + Test	Result - Remark	Verdict
	d) short circuit of any two terminals of an electronic component, other than integrated circuits		P
	This fault condition is not applied between the two circuits of an optocoupler		P
	e) failure of triacs in the diode mode		N/A
	f) failure of microprocessors and integrated circuits		P
	g) failure of an electronic power switching device		N/A
	Each low power circuit is short-circuited by connecting the low-power point to the pole of the supply source from which the measurements were made		P
19.11.3	If the appliance incorporates a protective electronic circuit that operates to ensure compliance with clause 19, the appliance is tested as specified		N/A
19.11.4	Appliances having a device with an off position obtained by electronic disconnection, or		N/A
	a device that can be placed in the stand-by mode,		N/A
	subjected to the tests of 19.11.4.1 to 19.11.4.7, the device being set in the off position or in the stand-by mode		N/A
	Appliances incorporating a protective electronic circuit subjected to the tests of 19.11.4.1 to 19.11.4.7, the tests being carried out after the protective electronic circuit has operated, except that		N/A
	appliances operated for 30 s or 5 min during the test of 19.7 are not subjected to the tests for electromagnetic phenomena.		N/A
	Surge protective devices disconnected, unless		N/A
	They incorporate spark gaps		N/A
19.11.4.1	The appliance is subjected to electrostatic discharges in accordance with IEC 61000-4-2, test level 4		N/A
19.11.4.2	The appliance is subjected to radiated fields in accordance with IEC 61000-4-3, at frequency ranges specified		N/A
19.11.4.3	The appliance is subjected to fast transient bursts in accordance with IEC 61000-4-4, test level 3 or 4 as specified		N/A
19.11.4.4	The power supply terminals of the appliance subjected to voltage surges in accordance with IEC 61000-4-5, test level 3 or 4 as specified		N/A
	An open circuit test voltage of 2 kV is applicable for the line-to-line coupling mode		N/A
	An open circuit test voltage of 4 kV is applicable for the line-to-earth coupling		N/A
	Earthed heating elements in class I appliances disconnected		N/A

Clause	Requirement + Test	Result - Remark	Verdict
19.11.4.5	The appliance is subjected to injected currents in accordance with IEC 61000-4-6, test level 3		N/A
19.11.4.6	Appliances having a rated current not exceeding 16 A are subjected to the Class 3 voltage dips and interruptions in accordance with IEC 61000-4-11		N/A
	Appliances having a rated current exceeding 16 A are subjected to the Class 3 voltage dips and interruptions in accordance with IEC 61000-4-34		N/A
19.11.4.7	The appliance is subjected to mains signals in accordance with IEC 61000-4-13, test level class 2		N/A
19.11.4.8	The appliance is supplied at rated voltage and operated under normal operation. After 60s the power supply is reduced to a level such that the appliance ceases to respond or parts controlled by the programmable component cease to operate		N/A
	The appliance continues to operate normally, or		N/A
	requires a manual operation to restart		N/A
19.12	If the safety of the appliance for any of the fault conditions specified in 19.11.2 depends on the operation of a miniature fuse-link complying with IEC 60127, the test is repeated, measuring the current flowing through the fuse-link; measured current (A); rated current of the fuse-link (A) :		P
19.13	During the tests the appliance does not emit flames, molten metal, poisonous or ignitable gas in hazardous amounts		P
	Temperature rises not exceeding the values shown in table 9 ..... :	(see appended table)	P
	Compliance with clause 8 not impaired		P
	If the appliance can still be operated it complies with 20.2		P
	Insulation, other than of class III appliances or class III constructions that do not contain live parts, withstands the electric strength test of 16.3, the test voltage as specified in table 4:		--
	- basic insulation (V) ..... :	1000	P
	- supplementary insulation (V) ..... :		N/A
	- reinforced insulation (V)..... :	3000	P
	After operation or interruption of a control, clearances and creepage distances across the functional insulation withstand the electric strength test of 16.3, the test voltage being twice the working voltage		N/A
	The appliance does not undergo a dangerous malfunction, and		N/A
	no failure of protective electronic circuits, if the appliance is still operable		N/A
	Appliances tested with an electronic switch in the off position, or in the stand-by mode:		--

Clause	Requirement + Test	Result - Remark	Verdict
	- do not become operational, or		N/A
	- if they become operational, do not result in a dangerous malfunction during or after the tests of 19.11.4		P
	If the appliance contains lids or doors that are controlled by one or more interlocks, one of the interlocks may be released provided that:		--
	- the lid or door does not move automatically to an open position when the interlock is released, and		N/A
	- the appliance does not start after the cycle in which the interlock was released		N/A
19.14	Appliances operated under the conditions of clause 11, any contactor or relay contact operating under the conditions of clause 11 being short-circuited		P
	For a relay or contactor with more than one contact, all contacts are short-circuited at the same time		N/A
	A relay or contactor operating only to ensure the appliance is energized for normal use is not short-circuited		N/A
	If more than one relay or contactor operates in clause 11, they are short-circuited in turn		N/A
19.15	For appliances with a mains voltage selector switch, the switch is set to the lowest rated voltage position and the highest value of rated voltage is applied		N/A
20	**STABILITY AND MECHANICAL HAZARDS**		--
20.1	Appliances having adequate stability		N/A
	Tilting test through an angle of 10°, appliance placed on an inclined plane/horizontal support, not connected to the supply mains; appliance does not overturn		N/A
	Tilting test repeated on appliances with heating elements, angle of inclination increased to 15°		N/A
	Possible heating test in overturned position; temperature rise does not exceed values shown in table 9		N/A
20.2	Moving parts adequately arranged or enclosed as to provide protection against personal injury		P
	Protective enclosures, guards and similar parts are non-detachable, and		P
	have adequate mechanical strength		P
	Enclosures that can be opened by overriding an interlock are considered to be detachable parts		N/A
	Self-resetting thermal cut-outs and overcurrent protective devices not causing a hazard by unexpected closure		P
	Not possible to touch dangerous moving parts with the test probe described		P

Clause	Requirement + Test	Result - Remark	Verdict
21	**MECHANICAL STRENGTH**		**--**
21.1	Appliance has adequate mechanical strength and is constructed as to withstand rough handling		P
	Checked by applying 3 blows to every point of the enclosure like to be weak, in accordance with test Ehb of IEC 60068-2-75, spring hammer test, with an impact energy of 0,5 J	(see appended table)	P
	The appliance shows no damage impairing compliance with this standard, and		P
	compliance with 8.1, 15.1 and clause 29 not impaired		P
	If doubt, supplementary or reinforced insulation subjected to the electric strength test of 16.3		N/A
	If necessary, repetition of groups of three blows on a new sample		N/A
21.2	Accessible parts of solid insulation having strength to prevent penetration by sharp implements		P
	Test not applicable if the thickness of supplementary insulation is at least 1 mm and reinforced insulation at least 2 mm		P
	The insulation is tested as specified, and does withstand the electric strength test of 16.3		N/A
22	**CONSTRUCTION**		**--**
22.1	Appliance marked with the first numeral of the IP system, relevant requirements of IEC 60529 are fulfilled	IP55	P
22.2	Stationary appliance: means to ensure all-pole disconnection from the supply being provided:		--
	- a supply cord fitted with a plug, or		N/A
	- a switch complying with 24.3, or		N/A
	- a statement in the instruction sheet that a disconnection incorporated in the fixed wiring is to be provided, or		P
	- an appliance inlet		N/A
	Singe-pole switches and single-pole protective devices for the disconnection of heating elements in single-phase, permanently connected class 01 and class I appliances, connected to the phase conductor		N/A
22.3	Appliance provided with pins: no undue strain on socket-outlets		N/A
	Applied torque not exceeding 0.25 Nm		N/A
	Pull force of 50N to each pin after the appliance has being placed in the heating cabinet; when cooled to room temperature the pins are not displaced by more than 1mm		N/A

Clause	Requirement + Test	Result - Remark	Verdict
	Each pin subjected to a torque of 0.4Nm; the pins are not rotating, unless		N/A
	rotating does not impair compliance with this standard		N/A
22.4	Appliance for heating liquids and appliance causing undue vibration not provided with pins for insertion into socket-outlets		N/A
22.5	No risk of electric shock when touching pins, for appliances having a capacitor with rated capacitance equal to or greater than 0,1µF, the appliance being disconnected from the supply at the instant of voltage peak		N/A
	Voltage not exceeding 34 V (V)..... :		N/A
	If compliance relies on the operation of an electronic circuit, the electromagnetic phenomena tests of 19.11.4.3 and 19.11.4.4 are applied		N/A
	The discharge test is then repeated three times, voltage not exceeding 34 V (V)..... :		N/A
22.6	Electrical insulation not affected by condensing water or leaking liquid		P
	Electrical insulation of Class II appliances not affected if a hose ruptures or seal leaks		N/A
	In case of doubt, test as described		N/A
22.7	Adequate safeguards against the risk of excessive pressure in appliances containing liquid or gases or having steam-producing devices		N/A
22.8	Electrical connections not subject to pulling during cleaning of compartments to which access can be gained without the aid of a tool, and that are likely to be cleaned in normal use		P
22.9	Insulation, internal wiring, windings, commutators and slip rings not exposed to oil, grease or similar substances, unless		P
	the substance has adequate insulating properties		N/A
22.10	Not possible to reset voltage-maintained non-self-resetting thermal cut-outs by the operation of an automatic switching device incorporated within the appliance, if:		N/A
	- a non-self-resetting thermal cut-out is required by the standard, and		N/A
	- a voltage maintained non-self-resetting thermal cut-out is used to meet it		N/A
	Non-self-resetting thermal motor protectors have a trip-free action, unless		N/A
	they are voltage maintained		N/A
	Reset buttons of non-self-resetting controls so located or protected that accidental resetting is unlikely		N/A

Clause	Requirement + Test	Result - Remark	Verdict
22.11	Reliable fixing of non-detachable parts that provide the necessary degree of protection against electric shock, moisture or contact with moving parts		P
	Obvious locked position of snap-in devices used for fixing such parts		P
	No deterioration of the fixing properties of snap-in devices used in parts that are likely to be removed during installation or servicing		P
	Tests as described		P
22.12	Handles, knobs etc. fixed in a reliable manner, if loosening result in a hazard		N/A
	Removing or fixing in wrong position of handles, knobs etc. indicating position of switches or similar components not possible, if resulting in a hazard		N/A
	A choking hazard does not apply to appliances for commercial use		N/A
	Axial force 15 N applied to parts, the shape being so that an axial pull is unlikely to be applied		N/A
	Axial force 30 N applied to parts, the shape being so that an axial pull is likely to be applied		N/A
	If the part is removed and can be contained within the small parts cylinder, it is considered to be a choking hazard		N/A
22.13	Unlikely that handles, when gripped as in normal use, make the operator's hand touch parts having a temperature rise exceeding the value specified for handles which are held for short periods only		N/A
22.14	No ragged or sharp edges creating a hazard for the user in normal use, or during user maintenance		P
	No exposed pointed ends of self-tapping screws or other fasteners, likely to be touched by the user in normal use or during user maintenance		P
22.15	Storage hooks and the like for flexible cords smooth and well rounded		N/A
22.16	Automatic cord reels cause no undue abrasion or damage to the sheath of the flexible cord, no breakage of conductors strands and no undue wear of contacts		N/A
	Cord reel tested with 6000 operations, as specified		N/A
	Electric strength test of 16.3, voltage of 1000 V applied		N/A
22.17	Spacers not removable from the outside by hand or by means of a screwdriver or a spanner		N/A
22.18	Current-carrying parts and other metal parts resistant to corrosion		P

Clause	Requirement + Test	Result - Remark	Verdict
22.19	Driving belts not relied upon to provide the required level of insulation, unless		N/A
	constructed to prevent inappropriate replacement		N/A
22.20	Direct contact between live parts and thermal insulation effectively prevented, unless		N/A
	material used is non-corrosive, non-hygroscopic and non-combustible		N/A
22.21	Wood, cotton, silk, ordinary paper and fibrous or hygroscopic material not used as insulation, unless		P
	impregnated		N/A
	This requirement does not apply to magnesium oxide and mineral ceramic fibres used for the electrical insulation of heating elements		N/A
22.22	Appliances not containing asbestos		P
22.23	Oils containing polychlorinated biphenyl (PCB) not used		P
22.24	Bare heating elements, except in class III appliances or class III constructions that do not contain live parts, adequately supported		N/A
	In case of rupture, the heating conductor is unlikely to come in contact with accessible metal parts		N/A
22.25	Sagging heating conductors, except in class III appliances or class III constructions that do not contain live parts, cannot come into contact with accessible metal parts		N/A
22.26	For class III constructions the insulation between parts operating at safety extra-low voltage and other live parts complies with the requirements for double or reinforced insulation		P
22.27	Parts connected by protective impedance separated by double or reinforced insulation		N/A
22.28	Metal parts of Class II appliances conductively connected to gas pipes or in contact with water, separated from live parts by double or reinforced insulation		N/A
22.29	Class II appliances permanently connected to fixed wiring so constructed that the required degree of access to live parts is maintained after installation		N/A
22.30	Parts serving as supplementary or reinforced insulation fixed so that they cannot be removed without being seriously damaged, or		N/A
	so constructed that they cannot be replaced in an incorrect position, and so that if they are omitted, the appliance is rendered inoperable or manifestly incomplete		P

Clause	Requirement + Test	Result - Remark	Verdict
22.31	Neither clearances nor creepage distances over supplementary and reinforced insulation reduced below values specified in clause 29 as a result of wear		P
	Neither clearances nor creepage distances between live parts and accessible parts reduced below values for supplementary insulation if wires, screws etc. become loose		P
22.32	Supplementary and reinforced insulation constructed or protected against pollution so that clearances or creepage distances are not reduced below the values in clause 29		P
	Supplementary insulation of natural or synthetic rubber resistant to ageing, or arranged and dimensioned so that creepage distances are not reduced below values specified in 29.2		N/A
	Ceramic material not tightly sintered, similar materials or beads alone not used as supplementary or reinforced insulation		N/A
	Ceramic and similar porous material in which heating conductors are embedded is considered to be basic insulation, not reinforced insulation		N/A
	Oxygen bomb test at 70 °C for 96 h and 16 h at room temperature		N/A
22.33	Conductive liquids that are or may become accessible in normal use and conductive liquids that are in contact with unearthed accessible metal parts are not in direct contact with live parts, or		N/A
	unearthed metal parts separated from live parts by basic insulation only		N/A
	Electrodes not used for heating liquids		N/A
	For class II constructions, conductive liquids that are or may become accessible in normal use and conductive liquids that are in contact with unearthed accessible metal parts, not in direct contact with basic or reinforced insulation, unless		N/A
	the reinforced insulation consists of at least 3 layers		N/A
	For class II constructions, conductive liquids which are in contact with live parts, not in direct contact with reinforced insulation, unless		N/A
	the reinforced insulation consists of at least 3 layers		N/A
	An air layer not used as basic or supplementary insulation in a double insulation system if likely to be bridged by leaking liquid		N/A
22.34	Shafts of operating knobs, handles, levers etc. not live, unless		N/A
	the shaft is not accessible when the part is removed		N/A

Clause	Requirement + Test	Result - Remark	Verdict
22.35	For other than class III constructions, handles, levers and knobs, held or actuated in normal use, not becoming live in the event of a failure of basic insulation		N/A
	Such parts being of metal, and their shafts or fixings are likely to become live in the event of a failure of basic insulation, are either adequately covered by insulation material or their accessible parts are separated from their shafts or fixings by supplementary insulation		N/A
	This requirement does not apply to handles, levers and knobs on stationary appliances and cordless appliances, other than those of electrical components, provided they are reliably connected to an earthing terminal or earthing contact, or separated from live parts by earthed metal		N/A
	Insulating material covering metal handles, levers and knobs withstand the electric strength test of 16.3 for supplementary insulation		N/A
22.36	For appliances other than class III, handles continuously held in the hand in normal use so constructed that when gripped as in normal use, the operators hand is not likely to touch metal parts, unless		N/A
	they are separated from live parts by double or reinforced insulation		N/A
22.37	Capacitors in Class II appliances not connected to accessible metal parts and their casings, if of metal, separated from accessible metal parts by supplementary insulation, unless		N/A
	the capacitors comply with 22.42		N/A
22.38	Capacitors not connected between the contacts of a thermal cut-out		P
22.39	Lamp holders used only for the connection of lamps		N/A
22.40	Motor-operated appliances and combined appliances intended to be moved while in operation, or having accessible moving parts, fitted with a switch to control the motor. The actuating member of the switch being easily visible and accessible		N/A
	If the appliance cannot operate continuously, automatically or remotely without giving rise to a hazard, appliances for remote operation being fitted with a switch for stopping the operation. The actuating member of the switch being easily visible and accessible		N/A
22.41	No components, other than lamps, containing mercury		P
22.42	Protective impedance consisting of at least two separate components		N/A
	Values specified in 8.1.4 not exceeded if any one of the components are short-circuited or open-circuited		N/A

Clause	Requirement + Test	Result - Remark	Verdict
	Resistors checked by the test of 14.1 a) in IEC 60065		N/A
	Capacitors checked by the tests for class Y capacitors in IEC 60384-14		N/A
22.43	Appliances adjustable for different voltages, accidental changing of the setting of the voltage unlikely to occur		N/A
22.44	Appliances not having an enclosure that is shaped or decorated like a toy		P
22.45	When air is used as reinforced insulation, clearances not reduced below the values specified in 29.1.3 due to deformation as a result of an external force applied to the enclosure		P
22.46	For programmable protective electronic circuits used to ensure compliance with the standard, the software contains measures to control the fault/error conditions in table R.1		N/A
	Software that contains measures to control the fault/error conditions specified in table R.2 is to be specified in parts 2 for particular constructions or to address specific hazards		N/A
	These requirements are not applicable to software used for functional purpose or compliance with clause 11		N/A
22.47	Appliances connected to the water mains withstand the water pressure expected in normal use		N/A
	No leakage from any part, including any inlet water hose		N/A
22.48	Appliances connected to the water mains constructed to prevent backsiphonage of non-potable water		N/A
22.49	For remote operation, the duration of operation is to be set before the appliance can be started, unless		N/A
	the appliance switches off automatically or can operate continuously without hazard		N/A
22.50	Controls incorporated in the appliance take priority over controls actuated by remote operation		P
22.51	There is a control on the appliance manually adjusted to the setting for remote operation before the appliance can be operated in this mode		N/A
	There is a visual indication showing that the appliance is adjusted for remote operation		N/A
	These requirements not necessary on appliances that can operate as follows, without giving rise to a hazard:		N/A
	- continuously, or		N/A
	- automatically, or		N/A
	- remotely		P

Clause	Requirement + Test	Result - Remark	Verdict
22.52	Socket-outlets on appliances accessible to the user in accordance with the socket-outlet system used in the country in which the appliance is sold		N/A
22.53	Class II appliances and class III appliances that incorporate functionally earthed parts have at least double insulation or reinforced insulation between live parts and the functionally earthed parts		N/A
22.54	Button cells and batteries designated R1 not accessible without the aid of a tool, unless		N/A
	the cover of their compartment can only be opened after at least two independent movements have been applied simultaneously		N/A
22.55	Devices operated to stop the intended function of the appliance, if any, are be distinguished from other manual devices by means of shape, size, surface texture or position ..... :		N/A
	The requirement concerning position does not preclude use of a push on push off switch		N/A
	An indication when the device has been operated is given by:		N/A
	– tactile feedback from the actuator or from the appliance, or		N/A
	– reduction in heat output; or		N/A
	– audible and visible feedback		N/A
22.56	Detachable power supply part provided with the part of class III construction		N/A
22.57	The properties of non-metallic materials do not degrade from exposure to UV-C radiation, as specified in Annex T		N/A
	This requirement does not apply to glass, ceramics or similar materials		N/A
23	**INTERNAL WIRING**		--
23.1	Wireways smooth and free from sharp edges		P
	Wires protected against contact with burrs, cooling fins etc.		P
	Wire holes in metal well-rounded or provided with bushings		N/A
	Wiring effectively prevented from coming into contact with moving parts		P
23.2	Beads etc. on live wires cannot change their position, and are not resting on sharp edges		N/A
	Beads inside flexible metal conduits contained within an insulating sleeve		N/A
23.3	Electrical connections and internal conductors movable relatively to each other not exposed to undue stress		N/A

Clause	Requirement + Test	Result - Remark	Verdict
	Flexible metallic tubes not causing damage to insulation of conductors		N/A
	Open-coil springs not used		N/A
	Adequate insulating lining provided inside a coiled spring, the turns of which touch one another		N/A
	No damage after 10 000 flexings for conductors flexed during normal use, or		N/A
	100 flexings for conductors flexed during user maintenance		N/A
	Electric strength test of 16.3, 1000 V between live parts and accessible metal parts		N/A
	Not more than 10% of the strands of any conductor broken, and		N/A
	not more than 30% for wiring supplying circuits that consume no more than 15W		N/A
23.4	Bare internal wiring sufficiently rigid and fixed		N/A
23.5	The insulation of internal wiring subjected to the supply mains voltage withstanding the electrical stress likely to occur in normal use		P
	Basic insulation electrically equivalent to the basic insulation of cords complying with IEC 60227 or IEC 60245, or		N/A
	no breakdown when a voltage of 2000 V is applied for 15 min between the conductor and metal foil wrapped around the insulation		P
	For class II construction, the requirements for supplementary insulation and reinforced insulation apply,		N/A
	except that the sheath of a cord complying with IEC 60227 or IEC 60245 may provide supplementary insulation.		N/A
	A single layer of internal wiring insulation does not provide reinforced insulation		P
23.6	Sleeving used as supplementary insulation on internal wiring retained in position by clamping at both ends, or		N/A
	be such that it can only be removed by breaking or cutting		N/A
23.7	The colour combination green/yellow only used for earthing conductors		P
23.8	Aluminium wires not used for internal wiring		P
23.9	Stranded conductors not consolidated by soldering where they are subjected to contact pressure, unless		P
	the contact pressure is provided by spring terminals		N/A

Clause	Requirement + Test	Result - Remark	Verdict
23.10	The insulation and sheath of internal wiring, incorporated in external hoses for the connection of an appliance to the water mains, at least equivalent to that of light polyvinyl chloride sheathed flexible cord (60227 IEC 52)		N/A
24	**COMPONENTS**		--
24.1	Components comply with safety requirements in relevant IEC standards		P
	List of components ..... :	(see appended table)	P
	Motors not required to comply with IEC 60034-1, they are tested as part of the appliance		P
	Relays tested as part of the appliance, or		N/A
	alternatively acc. to IEC 60730-1, and meeting the additional requirements in IEC 60335-1		N/A
	The requirements of Clause 29 apply between live parts of components and accessible parts of the appliance		N/A
	Components can comply with the requirements for clearances and creepage distances for functional insulation in the relevant component standard		P
	30.2 of this standard apply to parts of non-metallic material in components including parts of non-metallic material supporting current-carrying connections		P
	Components that have not been previously tested to comply with the IEC standard for the relevant component are tested according to the requirements of 30.2		P
	Components that have been previously tested to comply with the resistance to fire requirements in the IEC standard for the relevant component need not be retested provided the specified conditions are met		P
	If these conditions are not satisfied, the component is tested as part of the appliance.		P
	Power electronic converter circuits not required to comply with IEC 62477-1, they are tested as part of the appliance		N/A
	If components have not been tested and found to comply with relevant IEC standard for the number of cycles specified, they are tested in accordance with 24.1.1 to 24.1.9		P
	For components mentioned in 24.1.1 to 24.1.9 no additional tests specified in the relevant component standard are necessary other than those specified in 24.1.1 to 24.1.9		N/A
	Components not tested and found to comply with relevant IEC standard and components not marked or not used in accordance with its marking, tested under the conditions occurring in the appliance		P

Clause	Requirement + Test		Result - Remark	Verdict
	Lampholders and starterholders that have not being tested and found to comply with the relevant IEC standard, tested as a part of the appliance and additionally according to the gauging and interchangeability requirements of the relevant IEC standard			N/A
	No additional tests specified for nationally standardized plugs such as those detailed in IEC/TR 60083 or connectors complying with the standard sheets of IEC 60320-1 and IEC 60309			N/A
24.1.1	Capacitors likely to be permanently subjected to the supply voltage and used for radio interference suppression or for voltage dividing, comply with IEC 60384-14			P
	If the capacitors have to be tested, they are tested according to Annex F			N/A
24.1.2	Transformers in associated switch mode power supplies comply with Annex BB of IEC 61558-2-16			P
	Safety isolating transformers comply with IEC 61558-2-6			N/A
	If they have to be tested, they are tested according to Annex G			N/A
24.1.3	Switches comply with IEC 61058-1, the number of cycles of operation being at least 10 000			P
	If they have to be tested, they are tested according to Annex H			N/A
	If the switch operates a relay or contactor, the complete switching system is subjected to the test			N/A
	If the switch only operates a motor staring relay complying with IEC 60730-2-10 with the number of cycles of a least 10 000 as specified, the complete switching system need not be tested			N/A
24.1.4	Automatic controls comply with IEC 60730-1 with the relevant part 2. The number of cycles of operation being at least:			--
	- thermostats:	10 000		N/A
	- temperature limiters:	1 000		N/A
	- self-resetting thermal cut-outs:	300		N/A
	- voltage maintained non-self-resetting thermal cut-outs:	1 000		N/A

Clause	Requirement + Test		Result - Remark	Verdict
	- other non-self-resetting thermal cut-outs:	30		N/A
	- timers:	3 000		N/A
	- energy regulators:	10 000		N/A
	The number of cycles for controls operating during clause 11 need not be declared, if the appliance meets the requirements of this standard when they are short-circuited			N/A
	Thermal motor protectors are tested in combination with their motor under the conditions specified in Annex D			P
	For water valves containing live parts and that are incorporated in external hoses for connection of an appliance to the water mains, the degree of protection declared for subclause 6.5.2 of IEC 60730-2-8 is IPX7			N/A
	Thermal cut-outs of the capillary type comply with the requirements for type 2.K controls in IEC 60730-2-9			N/A
24.1.5	Appliance couplers comply with IEC 60320-1			
	However, for class II appliances classified higher than IPX0, the appliance couplers comply with IEC 60320-2-3			N/A
	Interconnection couplers comply with IEC 60320-2-2			N/A
24.1.6	Small lamp holders similar to E10 lampholders comply with IEC 60238, the requirements for E10 lampholders being applicable			N/A
24.1.7	For remote operation of the appliance via a telecommunication network, the relevant standard for the telecommunication interface circuitry in the appliance is IEC 62151			N/A
24.1.8	The relevant standard for thermal links is IEC 60691			N/A
	Thermal links not complying with IEC 60691 are considered to be an intentionally weak part for the purposes of Clause 19			N/A
24.1.9	Contactors and relays, other than motor starting relays, tested as part of the appliance			N/A
	They are also tested in accordance with Clause 17 of IEC 60730-1, the number of cycles of operations in 24.1.4 selected according to the contactor or relay function in the appliance ..... :			N/A
24.2	Appliances not fitted with:			--
	- switches, automatic controls or power supplies in flexible cords			P
	- devices causing the protective device in the fixed wiring to operate in the event of a fault in the appliance			P
	- thermal cut-outs that can be reset by soldering, unless			P

Clause	Requirement + Test	Result - Remark	Verdict
	the solder has a melding point of at least 230 ℃		N/A
24.3	Switches intended for all-pole disconnection of stationary appliances are directly connected to the supply terminals and have a contact separation in all poles, providing full disconnection under overvoltage category III conditions		P
24.4	Plugs and socket-outlets for extra-low voltage circuits and heating elements, not interchangeable with plugs and socket-outlets listed in IEC/TR 60083 or IEC 60906-1 or with connectors and appliance inlets complying with the standard sheets of IEC 60320-1		N/A
24.5	Capacitors in auxiliary windings of motors marked with their rated voltage and capacitance, and used accordingly		N/A
	Voltage across capacitors in series with a motor winding does not exceed 1,1 times rated voltage, when the appliance is supplied at 1,1 times rated voltage under minimum load		N/A
24.6	Working voltage of motors connected to the supply mains and having basic insulation that is inadequate for the rated voltage of the appliance, not exceeding 42 V		N/A
	In addition, the motors comply with the requirements of Annex I		N/A
24.7	Detachable hose-sets for connection of appliances to the water mains comply with IEC 61770		N/A
	They are supplied with the appliance		N/A
	Appliances intended to be permanently connected to the water mains not connected by a detachable hose-set		N/A
24.8	Motor running capacitors in appliances for which 30.2.3 is applicable and that are permanently connected in series with a motor winding, not causing a hazard in event of a failure		N/A
	One or more of the following conditions are to be met:		--
	- the capacitors are of class S2 or S3 according to IEC 60252-1		N/A
	- the capacitors are housed within a metallic or ceramic enclosure		N/A
	- the distance of separation of the outer surface to adjacent non-metallic parts exceeds 50 mm		N/A
	- adjacent non-metallic parts within 50 mm withstand the needle-flame test of Annex E		N/A
	- adjacent non-metallic parts within 50 mm classified as at least V-1 according to IEC 60695-11-10		N/A
25	**SUPPLY CONNECTION AND EXTERNAL FLEXIBLE CORDS**		**--**

Clause	Requirement + Test	Result - Remark	Verdict
25.1	Appliance not intended for permanent connection to fixed wiring, means for connection to the supply:		--
	- supply cord fitted with a plug, the current rating and voltage rating of the plug being not less than the corresponding ratings of its associated appliance		N/A
	- an appliance inlet having at least the same degree of protection against moisture as required for the appliance, or		N/A
	- pins for insertion into socket-outlets		N/A
25.2	Appliance not provided with more than one means of connection to the supply mains		P
	Stationary appliance for multiple supply may be provided with more than one means of connection, provided electric strength test of 1250 V for 1 min between each means of connection causes no breakdown		N/A
25.3	Appliance intended to be permanently connected to fixed wiring provided with one of the following means for connection to the supply mains:		N/A
	- a set of terminals allowing the connection of a flexible cord		--
	- a fitted supply cord		N/A
	- a set of supply leads accommodated in a suitable compartment		N/A
	- a set of terminals for the connection of cables of fixed wiring, cross-sectional areas specified in 26.6, and the appliance allows the connection of the supply conductors after the appliance has been fixed to its support		P
	- a set of terminals and cable entries, conduit entries, knock-outs or glands, allowing connection of appropriate types of cable or conduit, and the appliance allows the connection of the supply conductors after the appliance has been fixed to its support		N/A
	For a fixed appliance constructed so that parts can be removed to facilitate easy installation, this requirement is met if it is possible to connect the fixed wiring without difficulty after a part of the appliance has been fixed to its support		N/A
25.4	Cable and conduit entries, rated current of appliance not exceeding 16 A, dimension according to table 10 (mm) :		P
	Introduction of conduit or cable does not reduce clearances or creepage distances below values specified in clause 29		P
25.5	Method for assembling the supply cord to the appliance:		--
	- type X attachment		N/A
	- type Y attachment		N/A
	- type Z attachment, if allowed in relevant part 2		N/A

Clause	Requirement + Test	Result - Remark	Verdict
	Type X attachment, other than those with a specially prepared cord, not used for flat twin tinsel cords		N/A
	For multi-phase appliances supplied with a supply cord and that are intended to be permanently connected to fixed wiring, the supply cord is assembled to the appliance by type Y attachment		N/A
25.6	Plugs fitted with only one flexible cord		N/A
25.7	Supply cords, other than for class III appliances, being one of the following types:		--
	- rubber sheathed (at least 60245 IEC 53)		N/A
	- polychloroprene sheathed (at least 60245 IEC 57)		N/A
	- polyvinyl chloride sheathed. Not used if they are likely to touch metal parts having a temperature rise exceeding 75 K during the test of clause 11		--
	light polyvinyl chloride sheathed cord (60227 IEC 52), for appliances not exceeding 3 kg		N/A
	ordinary polyvinyl chloride sheathed cord (60227 IEC 53), for other appliances		N/A
	- heat resistant polyvinyl chloride sheathed. Not used for type X attachment other than specially prepared cords		--
	heat-resistant light polyvinyl chloride sheathed cord (60227 IEC 56), for appliances not exceeding 3 kg		N/A
	heat-resistant polyvinyl chloride sheathed cord (60227 IEC 57), for other appliances		N/A
	- halogen-free, low smoke, thermoplastic insulated and sheathed		--
	light duty halogen-free low smoke flexible cable (62821 IEC 101) for circular cable and (62821 IEC 101f) for flat cable		N/A
	Ordinary duty halogen-free low smoke flexible cable (62821 IEC 102) for circular cable and (62821 IEC 102f(for flat cable		N/A
	Supply cords for class III appliances adequately insulated		N/A
	Test with 500 V for 2 min for supply cords of class III appliances that contain live parts		N/A
25.8	Nominal cross-sectional area of supply cords not less than table 11; rated current (A); cross-sectional area (mm^2) :		N/A
25.9	Supply cords not in contact with sharp points or edges		N/A
25.10	Supply cord of class I appliances have a green/yellow core for earthing		N/A
	In multi-phase appliances, the colour of the neutral conductor of the supply cord is blue		N/A
	Where additional neutral conductors are provided in the supply cord:		--
	– other colours may be used for these additional neutral conductors;		N/A

Clause	Requirement + Test	Result - Remark	Verdict
	– all of the neutral conductors and line conductors are identified by marking using the alpha numeric notation specified in IEC 60445		N/A
	– the supply cord is fitted to the appliance		N/A
25.11	Conductors of supply cords not consolidated by soldering where they are subject to contact pressure, unless		N/A
	the contact pressure is provided by spring terminals		N/A
25.12	Insulation of the supply cord not damaged when moulding the cord to part of the enclosure		N/A
25.13	Inlet openings so constructed as to prevent damage to the supply cord		N/A
	If it is not evident that the supply cord can be introduced without risk of damage, a non-detachable lining or bushing complying with 29.3 for supplementary insulation provided		N/A
	If unsheathed supply cord, a similar additional bushing or lining is required, unless the appliance is		N/A
	class 0, or		N/A
	a class III appliance not containing live parts		N/A
25.14	Supply cords moved while in operation adequately protected against excessive flexing		N/A
	Flexing test, as described:		N/A
	- applied force (N)..... :		N/A
	- number of flexings..... ..... :		N/A
	The test does not result in:		N/A
	- short-circuit between the conductors, such that the current exceeds a value of twice the rated current		N/A
	- breakage of more than 10% of the strands of any conductor		N/A
	- separation of the conductor from its terminal		N/A
	- loosening of any cord guard		N/A
	- damage to the cord or the cord guard		N/A
	- broken strands piercing the insulation and becoming accessible		N/A
25.15	For appliances with supply cord and appliances to be permanently connected to fixed wiring by a flexible cord, conductors of the supply cord relieved from strain, twisting and abrasion by use of cord anchorage		N/A

Clause	Requirement + Test	Result - Remark	Verdict
	The cord cannot be pushed into the appliance to such an extent that the cord or internal parts of the appliance can be damaged		N/A
	Pull and torque test of supply cord:		--
	- fixed appliances: pull 100 N; torque (not on automatic cord reel) (Nm) ..... :		N/A
	- other appliances: values shown in table 12: mass (kg); pull (N); torque (not on automatic cord reel) (Nm) .... :		N/A
	Cord not damaged and max. 2 mm displacement of the cord		N/A
25.16	Cord anchorages for type X attachments constructed and located so that:		--
	- replacement of the cord is easily possible		N/A
	- it is clear how the relief from strain and the prevention of twisting are obtained		N/A
	- they are suitable for different types of supply cord		N/A
	- cord cannot touch the clamping screws of cord anchorage if these screws are accessible, unless		N/A
	they are separated from accessible metal parts by supplementary insulation		N/A
	- the cord is not clamped by a metal screw which bears directly on the cord		N/A
	- at least one part of the cord anchorage securely fixed to the appliance, unless		N/A
	it is part of a specially prepared cord		N/A
	- screws which have to be operated when replacing the cord do not fix any other component, unless		N/A
	the appliance becomes inoperative or incomplete or the parts cannot be removed without a tool		N/A
	- if labyrinths can be bypassed the test of 25.15 is nevertheless withstood		N/A
	- for class 0, 0I and I appliances they are of insulating material or are provided with an insulating lining, unless		N/A
	failure of the insulation of the cord does not make accessible metal parts live		N/A
	- for class II appliances they are of insulating material, or		N/A
	if of metal, they are insulated from accessible metal parts by supplementary insulation		N/A
	After the test of 25.15, under the conditions specified, the conductors have not moved by more than 1 mm in the terminals		N/A

Clause	Requirement + Test	Result - Remark	Verdict
25.17	Adequate cord anchorages for type Y and Z attachment, test with the cord supplied with the appliance		N/A
25.18	Cord anchorages only accessible with the aid of a tool, or		N/A
	Constructed so that the cord can only be fitted with the aid of a tool		N/A
25.19	Type X attachment, glands not used as cord anchorage in portable appliances		N/A
	Tying the cord into a knot or tying the cord with string not used		N/A
25.20	The conductors of the supply cord for type Y and Z attachment insulated from accessible metal parts		N/A
25.21	Space for supply cord for type X attachment or for connection of fixed wiring constructed:		N/A
	- to permit checking of conductors with respect to correct positioning and connection before fitting any cover		N/A
	- so there is no risk of damage to the conductors or their insulation when fitting the cover		N/A
	- for portable appliances, so that the uninsulated end of a conductor, if it becomes free from the terminal, prevented from contact with accessible metal parts		N/A
	2 N test to the conductor for portable appliances; no contact with accessible metal parts		N/A
25.22	Appliance inlets:		N/A
	- live parts not accessible during insertion or removal		N/A
	Requirement not applicable to appliance inlets complying with IEC 60320-1		N/A
	- connector can be inserted without difficulty		N/A
	- the appliance is not supported by the connector		N/A
	- not for cold conditions if temp. rise of external metal parts exceeds 75 K during clause 11, unless		N/A
	the supply cord is unlikely to touch such metal parts		N/A
25.23	Interconnection cords comply with the requirements for the supply cord, except that:		N/A
	- the cross-sectional area of the conductors is determined on the basis of the maximum current during clause 11		N/A
	- the thickness of the insulation may be reduced		N/A
	- for class I or class II appliance with class III construction, the cross sectional areas of the conductors need not comply with 25.8 if specified conditions are met		N/A
	If necessary, electric strength test of 16.3		N/A

Clause	Requirement + Test	Result - Remark	Verdict
25.24	Interconnection cords not detachable without the aid of a tool if compliance with this standard is impaired when they are disconnected		N/A
25.25	Dimensions of pins that are inserted into socket-outlets compatible with the dimensions of the relevant socket-outlet.		N/A
	Dimensions of pins and engagement face in accordance with the dimensions of the relevant plug in IEC/TR 60083		N/A
26	**TERMINALS FOR EXTERNAL CONDUCTORS**		--
26.1	Appliances provided with terminals or equally effective devices for connection of external conductors		N/A
	Terminals only accessible after removal of a non-detachable cover, except		N/A
	for class III appliances that do not contain live parts		N/A
	Earthing terminals may be accessible if a tool is required to make the connections and means are provided to clamp the wire independently from its connection		N/A
26.2	Appliances with type X attachment and appliances for the connection of cables of fixed wiring provided with terminals in which connections are made by means of screws, nuts or similar devices, unless		N/A
	the connections are soldered		N/A
	Screws and nuts not used to fix any other component, except		N/A
	internal conductors, if so arranged that they are unlikely to be displaced when fitting the supply conductors		N/A
	If soldered connections used, the conductor so positioned or fixed that reliance is not placed on soldering alone, unless		N/A
	barriers provided so that neither clearances nor creepage distances between live parts and other metal parts reduced below the values for supplementary insulation if the conductor becomes free at the soldered joint		N/A
26.3	Terminals for type X attachment and for connection of cables of fixed wiring so constructed that the conductor is clamped between metal surfaces with sufficient contact pressure but without damaging the conductor		N/A
	Terminals fixed so that when the clamping means is tightened or loosened:		N/A
	- the terminal does not become loose		N/A
	- internal wiring is not subjected to stress		N/A
	- neither clearances nor creepage distances are reduced below the values in clause 29		N/A

Clause	Requirement + Test	Result - Remark	Verdict
	Compliance checked by inspection and by the test of subclause 9.6 of IEC 60999-1, the torque applied being equal to two-thirds of the torque specified (Nm)..... :		N/A
	No deep or sharp indentations of the conductors		N/A
26.4	Terminals for type X attachment, except those having a specially prepared cord and those for the connection of cables of fixed wiring, no special preparation of conductors such as by soldering, use of cable lugs, eyelets or similar, and		N/A
	so constructed or placed that conductors prevented from slipping out when clamping screws or nuts are tightened		N/A
26.5	Terminals for type X attachment so located or shielded that if a wire of a stranded conductor escapes, no risk of accidental connection to other parts that result in a hazard		N/A
	Stranded conductor test, 8 mm insulation removed		N/A
	No contact between live parts and accessible metal parts and,		N/A
	for class II constructions, between live parts and metal parts separated from accessible metal parts by supplementary insulation only		N/A
26.6	Terminals for type X attachment and for connection of cables of fixed wiring suitable for connection of conductors with cross-sectional area according to table 13; rated current (A); nominal cross-sectional area (mm^2) . :		N/A
	If a specially prepared cord is used, terminals need only be suitable for that cord		N/A
26.7	Terminals for type X attachment, except in class III appliances not containing live parts, accessible after removal of a cover or part of the enclosure		N/A
26.8	Terminals for the connection of fixed wiring, including the earthing terminal, located close to each other		N/A
26.9	Terminals of the pillar type constructed and located as specified		N/A
26.10	Terminals with screw clamping and screwless terminals not used for flat twin tinsel cords, unless		N/A
	conductors ends fitted with means suitable for screw terminals		N/A
	Pull test of 5 N to the connection		N/A
26.11	For type Y and Z attachment, soldered, welded, crimped or similar connections may be used		N/A
	For Class II appliances, the conductor so positioned or fixed that reliance is not placed on soldering, welding or crimping alone		N/A

Clause	Requirement + Test	Result - Remark	Verdict
	If soldering, welding or crimping alone used, barriers provided so that clearances and creepage distances between live parts and other metal parts are not reduced below the values for supplementary insulation if the conductor becomes free		N/A
27	**PROVISION FOR EARTHING**		--
27.1	Accessible metal parts of Class 0I and I appliances permanently and reliably connected to an earthing terminal or earthing contact of the appliance inlet		P
	Earthing terminals and earthing contacts not connected to the neutral terminal		P
	Class 0, II and III appliances have no provision for protective earthing		N/A
	Class II appliances and class III appliances can incorporate an earth for functional purposes		N/A
	Safety extra-low voltage circuits not earthed, unless		N/A
	protective extra-low voltage circuits		N/A
27.2	Clamping means of earthing terminals adequately secured against accidental loosening		P
	Terminals for the connection of external equipotential bonding conductors allow connection of conductors of 2.5 to 6 mm², and		N/A
	- do not provide earthing continuity between different parts of the appliance, and		N/A
	- conductors cannot be loosened without the aid of a tool		N/A
	Requirements not applicable to class II appliances and class III appliances that incorporate an earth for functional purposes		N/A
27.3	For a detachable part having an earth connection and being plugged into another part of the appliance, the earth connection is made before and separated after current-carrying connections when removing the part		N/A
	For appliances with supply cords, current-carrying conductors become taut before earthing conductor, if the cord slips out of the cord anchorage		N/A
	Requirements not applicable to class II appliances and class III appliances that incorporate an earth for functional purposes		N/A
27.4	No risk of corrosion resulting from contact between parts of the earthing terminal and the copper of the earthing conductor or other metal		P

Clause	Requirement + Test	Result - Remark	Verdict
	Parts providing earthing continuity, other than parts of a metal frame or enclosure, have adequate resistance to corrosion		P
	If of steel, these parts provided with an electroplated coating with a thickness at least 5 µm		P
	Adequate protection against rusting of parts of coated or uncoated steel, only intended to provide or transmit contact pressure		P
	In the body of the earthing terminal is a part of a frame or enclosure of aluminium or aluminium alloys, precautions taken to avoid risk of corrosion		P
	Requirements not applicable to class II appliances and class III appliances that incorporate an earth for functional purposes		N/A
27.5	Low resistance of connection between earthing terminal and earthed metal parts		P
	This requirement does not apply to connections providing earthing continuity in the protective extra-low voltage circuit, provided the clearances of basic insulation are based on the rated voltage of the appliance		N/A
	Requirements not applicable to class II appliances and class III appliances that incorporate an earth for functional purposes		P
	Resistance not exceeding 0,1 Ω at the specified low-resistance test (Ω)..... :	0,026 Ω	P
27.6	The printed conductors of printed circuit boards not used to provide earthing continuity in hand-held appliances.		N/A
	They may be used to provide earthing continuity in other appliances if at least two tracks are used with independent soldering points and the appliance complies with 27.5 for each circuit		N/A
	Requirements not applicable to class II appliances and class III appliances that incorporate an earth for functional purposes		N/A
28	**SCREWS AND CONNECTIONS**		--
28.1	Fixings, electrical connections and connections providing earthing continuity withstand mechanical stresses		P
	Screws not of soft metal liable to creep, such as zinc or aluminium		P
	Diameter of screws of insulating material min. 3 mm		N/A
	Screws of insulating material not used for any electrical connections or connections providing earthing continuity		N/A

Clause	Requirement + Test	Result - Remark	Verdict
	Screws used for electrical connections or connections providing earthing continuity screwed into metal		N/A
	Screws not of insulating material if their replacement by a metal screw can impair supplementary or reinforced insulation		P
	For type X attachment, screws to be removed for replacement of supply cord or for user maintenance, not of insulating material if their replacement by a metal screw impairs basic insulation		N/A
	For screws and nuts; torque-test as specified in table 14 ..... :	(see appended table)	P
28.2	Electrical connections and connections providing earthing continuity constructed so that contact pressure is not transmitted through non-ceramic insulating material liable to shrink or distort, unless		P
	there is resiliency in the metallic parts to compensate for shrinkage or distortion of the insulating material		N/A
	This requirement does not apply to electrical connections in circuits of appliances for which:		--
	30.2.2 is applicable and that carry a current not exceeding 0,5 A		P
	30.2.3 is applicable and that carry a current not exceeding 0,2 A		N/A
28.3	Space-threaded (sheet metal) screws only used for electrical connections if they clamp the parts together		N/A
	Thread-cutting (self-tapping) screws and thread rolling screws only used for electrical connections if they generate a full form standard machine screw thread		P
	Thread-cutting (self-tapping) screws not used if they are likely to be operated by the user or installer		P
	Thread-cutting, thread rolling and space threaded screws may be used in connections providing earthing continuity provided it is not necessary to disturb the connection:		N/A
	- in normal use,		N/A
	- during user maintenance,		N/A
	- when replacing a supply cord having a type X attachment, or		N/A
	- during installation		N/A
	At least two screws being used for each connection providing earthing continuity, unless		N/A
	the screw forms a thread having a length of at least half the diameter of the screw		N/A

Clause	Requirement + Test	Result - Remark	Verdict
28.4	Screws and nuts that make mechanical connection secured against loosening if they also make electrical connections or connections providing earthing continuity		P
	This requirement does not apply to screws in the earthing circuit if at least two screws are used, or		N/A
	if an alternative earthing circuit is provided		N/A
	Rivets for electrical connections or connections providing earthing continuity secured against loosening if the connections are subjected to torsion		N/A
29	**CLEARANCES, CREEPAGE DISTANCES AND SOLID INSULATION**		--
	Clearances, creepage distances and solid insulation withstand electrical stress		P
	For coatings used on printed circuits boards to protect the microenvironment (Type 1) or to provide basic insulation (Type 2), Annex J applies ..... :		N/A
	The microenvironment is pollution degree 1 under type 1 protection		N/A
	For type 2 protection, the spacing between the conductors before the protection is applied is not less than the values specified in Table 1 of IEC 60664-3		N/A
	These values apply to functional, basic, supplementary and reinforced insulation ..... :		N/A
29.1	Clearances not less than the values specified in table 16, taking into account the rated impulse voltage for the overvoltage categories of table 15, unless..... :	(see appended table)	P
	for basic insulation and functional insulation they comply with the impulse voltage test of clause 14		N/A
	However, if the distances are affected by wear, distortion, movement of the parts or during assembly, the clearances for rated impulse voltages of 1500V and above are increased by 0,5 mm and the impulse voltage test is not applicable		N/A
	For appliances intended for use at altitudes exceeding 2 000 m, the clearances in Table 16 is increased according to the relevant multiplier values in Table A.2 of IEC 60664-1		N/A
	Impulse voltage test is not applicable:		--
	- when the microenvironment is pollution degree 3, or		N/A
	- for basic insulation of class 0 and class 01 appliances, or		N/A
	- to appliances intended for use at altitudes exceeding 2 000 m		N/A
	Appliances are in overvoltage category II		P
	A force of 2 N is applied to bare conductors, other than heating elements		N/A

Clause	Requirement + Test	Result - Remark	Verdict
	A force of 30 N is applied to accessible surfaces		N/A
29.1.1	Clearances of basic insulation withstand the overvoltages, taking into account the rated impulse voltage		P
	The values of table 16 or the impulse voltage test of clause 14 are applicable ..... :	(see appended table)	P
	Clearance at the terminals of tubular sheathed heating elements may be reduced to 1,0 mm if the microenvironment is pollution degree 1		N/A
	Lacquered conductors of windings considered to be bare conductors		P
29.1.2	Clearances of supplementary insulation not less than those specified for basic insulation in table 16 ..... :	(see appended table)	P
29.1.3	Clearances of reinforced insulation not less than those specified for basic insulation in table 16, using the next higher step for rated impulse voltage ..... :	(see appended table)	P
	For double insulation, with no intermediate conductive part between basic and supplementary insulation, clearances are measured between live parts and the accessible surface, and the insulation system is treated as reinforced insulation		N/A
29.1.4	Clearances for functional insulation are the largest values determined from:		--
	- table 16 based on the rated impulse voltage..... :	(see appended table)	P
	- table F.7a in IEC 60664-1, frequency not exceeding 30 kHz		N/A
	- clause 4 of IEC 60664-4, frequency exceeding 30 kHz		N/A
	If values of table 16 are largest, the impulse voltage test of clause 14 may be applied instead, unless		N/A
	the microenvironment is pollution degree 3, or		N/A
	the distances can be affected by wear, distortion, movement of the parts or during assembly		N/A
	However, clearances are not specified if the appliance complies with clause 19 with the functional insulation short-circuited		P
	Lacquered conductors of windings considered to be bare conductors		P
	However, clearances at crossover points are not measured		P
	Clearance between surfaces of PTC heating elements may be reduced to 1mm		N/A
29.1.5	Appliances having higher working voltages than rated voltage, clearances for basic insulation are the largest values determined from:		--
	- table 16 based on the rated impulse voltage..... :		N/A
	- table F.7a in IEC 60664-1, frequency not exceeding 30 kHz		N/A

Clause	Requirement + Test	Result - Remark	Verdict
	- clause 4 of IEC 60664-4, frequency exceeding 30 kHz		N/A
	If clearances for basic insulation are selected from Table F.7a of IEC 60664-1 or Clause 4 of IEC 60664-4, the clearances of supplementary insulation are not less than those specified for basic insulation		N/A
	If clearances for basic insulation are selected from Table F.7a of IEC 60664-1, the clearances of reinforced insulation dimensioned as specified in Table F.7a are to withstand 160% of the withstand voltage required for basic insulation		N/A
	If clearances for basic insulation are selected from Clause 4 of IEC 60664-4, the clearances of reinforced insulation are twice the value required for basic insulation		N/A
	If the secondary winding of a step-down transformer is earthed, or if there is an earthed screen between the primary and secondary windings, clearances of basic insulation on the secondary side not less than those specified in table 16, but using the next lower step for rated impulse voltage		N/A
	Circuits supplied with a voltage lower than rated voltage, clearances of functional insulation are based on the working voltage used as the rated voltage in table 15		N/A
29.2	Creepage distances not less than those appropriate for the working voltage, taking into account the material group and the pollution degree..... :	(see appended table)	P
	Pollution degree 2 applies, unless		P
	- precautions taken to protect the insulation; pollution degree 1		N/A
	- insulation subjected to conductive pollution; pollution degree 3		P
	A force of 2 N is applied to bare conductors, other than heating elements		P
	A force of 30 N is applied to accessible surfaces		P
	In a double insulation system, the working voltage for both the basic and supplementary insulation is taken as the working voltage across the complete double insulation system		N/A
29.2.1	Creepage distances of basic insulation not less than specified in table 17 ..... :	(see appended table)	P
	However, if the working voltage is periodic and has a frequency exceeding 30 kHz, the creepage distances are also determined from table 2 of IEC 60664-4, these values being used if exceeding the values in table 17..... :		N/A

Clause	Requirement + Test	Result - Remark	Verdict
	Except for pollution degree 1, corresponding creepage distance not less than the minimum specified for the clearance in table 16, if the clearance has been checked according to the test of clause 14 ..... :		N/A
29.2.2	Creepage distances of supplementary insulation at least those specified for basic insulation in table 17, or :	(see appended table)	P
	Table 2 of IEC 60664-4, as applicable ..... :		N/A
29.2.3	Creepage distances of reinforced insulation at least double those specified for basic insulation in table 17, or :	(see appended table)	P
	Table 2 of IEC 60664-4, as applicable ..... :		N/A
29.2.4	Creepage distances of functional insulation not less than specified in table 18 ..... :	(see appended table)	P
	However, if the working voltage is periodic and has a frequency exceeding 30 kHz, the creepage distances are also determined from table 2 of IEC 60664-4, these values being used if exceeding the values in table 18..... :		N/A
	Creepage distances may be reduced if the appliance complies with clause 19 with the functional insulation short-circuited		P
29.3	Supplementary and reinforced insulation have adequate thickness, or a sufficient number of layers, to withstand the electrical stresses		P
	Compliance checked:		--
	- by measurement, in accordance with 29.3.1, or		P
	- by an electric strength test in accordance with 29.3.2, or		P
	- for insulation, other than single layer internal wiring insulation, by an assessment of the thermal quality of the material combined with an electric strength test, in accordance with 29.3.3, and		N/A
	for accessible parts of reinforced insulation consisting of a single layer, by measurement in accordance with 29.3.4, or		N/A
	- by an assessment of the thermal quality of the material according to 29.3.3 combined with an electric strength test in accordance with 23.5, for each single layer internal wiring insulation touching each other, or		N/A
	- as specified in subclause 6.3 of IEC 60664-4 for insulation that is subjected to any periodic voltage having a frequency exceeding 30 kHz		N/A
29.3.1	Supplementary insulation have a thickness of at least 1 mm		P
	Reinforced insulation have a thickness of at least 2 mm		P
29.3.2	Each layer of material withstand the electric strength test of 16.3 for supplementary insulation		N/A

Clause	Requirement + Test	Result - Remark	Verdict
	Supplementary insulation consist of at least 2 layers		N/A
	Reinforced insulation consist of at least 3 layers		N/A
29.3.3	The insulation is subjected to the dry heat test Bb of IEC 60068-2-2, followed by		N/A
	the electric strength test of 16.3		N/A
	If the temperature rise during the tests of clause 19 does not exceed the value specified in table 3, the test of IEC 60068-2-2 is not carried out		N/A
29.3.4	Thickness of accessible parts of reinforced insulation consisting of a single layer not less than specified in table 19 ..... :		N/A
30	**RESISTANCE TO HEAT AND FIRE**		**--**
30.1	External parts of non-metallic material,		P
	parts supporting live parts, and		P
	parts of thermoplastic material providing supplementary or reinforced insulation		P
	sufficiently resistant to heat		P
	Ball-pressure test according to IEC 60695-10-2		P
	External parts tested at 40 °C plus the maximum temperature rise determined during the test of clause 11, or at 75 °C, whichever is the higher; temperature (°C) :	(see appended table 30.1)	P
	Parts supporting live parts tested at 40°C plus the maximum temperature rise determined during the test of clause 11, or at 125 °C, whichever is the higher; temperature (°C) :	(see appended table 30.1)	P
	Parts of thermoplastic material providing supplementary or reinforced insulation tested at 25 °C plus the maximum temperature rise determined during clause 19, if higher; temperature (°C) ..... :	(see appended table 30.1)	P
30.2	Parts of non-metallic material resistant to ignition and spread of fire		P
	This requirement does not apply to:		--
	parts having a mass not exceeding 0,5 g, provided the cumulative effect is unlikely to propagate flames that originate inside the appliance by propagating flames from one part to another, or		N/A
	decorative trims, knobs and other parts unlikely to be ignited or to propagate flames that originate inside the appliance		P
	Compliance checked by the test of 30.2.1, and in addition:		P
	- for attended appliances, 30.2.2 applies		N/A

Clause	Requirement + Test	Result - Remark	Verdict
	- for unattended appliances, 30.2.3 applies		P
	For appliances for remote operation, 30.2.3 applies		P
	For base material of printed circuit boards, 30.2.4 applies		P
30.2.1	Parts of non-metallic material subjected to the glow-wire test of IEC 60695-2-11 at 550°C	(see appended table 30.2)	P
	However, test not carried out if the material is classified as having a glow-wire flammability index according to IEC 60695-2-12 of at least 550 °C, or		N/A
	the material is classified at least HB40 according to IEC 60695-11-10		N/A
	Parts for which the glow-wire test cannot be carried out need to meet the requirements in ISO 9772 for material classified HBF		N/A
30.2.2	Appliances operated while attended, parts of non-metallic material supporting current-carrying connections, and		N/A
	parts of non-metallic material within a distance of 3mm of such connections,		N/A
	subjected to the glow-wire test of IEC 60695-2-11 with appropriate severity level:	(see appended table 30.2)	--
	- 750 °C, for connections carrying a current exceeding 0,5 A during normal operation		N/A
	- 650 °C, for other connections		N/A
	Glow-wire applied to an interposed shielding material, if relevant		N/A
	The glow-wire test is not carried out on parts of material classified as having a glow-wire flammability index according to IEC 60695-2-12 of at least:		--
	- 750 °C, for connections carrying a current exceeding 0,5 A during normal operation		N/A
	- 650 °C, for other connections		N/A
	The glow-wire test is also not carried out on small parts. These parts are to:		--
	- comprise material having a glow-wire flammability index of at least 750 °C, or 650 °C as appropriate, or		N/A
	- comply with the needle-flame test of Annex E, or	(see appended table 30.2/30.2.4)	N/A
	- comprise material classified as V-0 or V-1 according to IEC 60695-11-10 ..... :		N/A
	Glow-wire test not applicable to conditions as specified :	Kept switched on by hand	N/A
30.2.3	Appliances operated while unattended, tested as specified in 30.2.3.1 and 30.2.3.2		P
	The tests are not applicable to conditions as specified :		N/A

Clause	Requirement + Test	Result - Remark	Verdict
30.2.3.1	Parts of non-metallic material supporting connections carrying a current exceeding 0,2 A during normal operation, and		P
	parts of non-metallic material, other than small parts, within a distance of 3 mm,		P
	subjected to the glow-wire test of IEC 60695-2-11 with a test severity of 850 °C	(see appended table 30.2)	N/A
	Glow-wire applied to an interposed shielding material, if relevant		N/A
	The glow-wire test is not carried out on parts of material classified as having a glow-wire flammability index according to IEC 60695-2-12 of at least 850 °C		N/A
30.2.3.2	Parts of non-metallic material supporting connections, and		P
	parts of non-metallic material within a distance of 3mm,		P
	subjected to the glow-wire test of IEC 60695-2-11 with appropriate severity level:	(see appended table 30.2)	N/A
	- 750 °C, for connections carrying a current exceeding 0,2 A during normal operation		N/A
	- 650 °C, for other connections		N/A
	Glow-wire applied to an interposed shielding material, if relevant		N/A
	However, the glow-wire test of 750 °C or 650 °C as appropriate, is not carried out on parts of material fulfilling both or either of the following classifications:		--
	- a glow-wire ignition temperature according to IEC 60695-2-13 of at least:		N/A
	775 °C, for connections carrying a current exceeding 0,2 A during normal operation		N/A
	675 °C, for other connections		N/A
	- a glow-wire flammability index according to IEC 60695-2-12 of at least:		N/A
	- 750 °C, for connections carrying a current exceeding 0,2 A during normal operation		P
	- 650 °C, for other connections		P
	The glow-wire test is also not carried out on small parts. These parts are to:		--
	- comprise material having a glow-wire ignition temperature of at least 775 °C or 675 °C as appropriate, or		N/A
	- comprise material having a glow-wire flammability index of at least 750 °C or 650 °C as appropriate, or		N/A
	- comply with the needle-flame test of Annex E, or		N/A

Clause	Requirement + Test	Result - Remark	Verdict
	- comprise material classified as V-0 or V-1 according to IEC 60695-11-10		N/A
	The consequential needle-flame test of Annex E applied to non-metallic parts that encroach within the vertical cylinder placed above the centre of the connection zone and on top of the non-metallic parts supporting current-carrying connections, and parts of non-metallic material within a distance of 3 mm of such connections if these parts are those:		--
	- parts that withstood the glow-wire test of IEC 60695-2-11 of 750 °C or 650 °C as appropriate, but produce a flame that persist longer than 2 s, or		N/A
	- parts that comprised material having a glow-wire flammability index of at least 750 °C or 650 °C as appropriate, or		N/A
	- small parts, that comprised material having a glow-wire flammability index of at least 750 °C or 650 °C as appropriate, or		N/A
	- small parts for which the needle-flame test of Annex E was applied, or		N/A
	- small parts for which a material classification of V-0 or V-1 was applied		N/A
	However, the consequential needle-flame test is not carried out on non-metallic parts, including small parts, within the cylinder that are:		--
	- parts having a glow-wire ignition temperature of at least 775 °C or 675 °C as appropriate, or		N/A
	- parts comprising material classified as V-0 or V-1 according to IEC 60695-11-10, or		N/A
	- parts shielded by a flame barrier that meets the needle-flame test of Annex E or that comprises material classified as V-0 or V-1 according to IEC 60695-11-10		N/A
30.2.4	Base material of printed circuit boards subjected to the needle-flame test of Annex E	(see appended table 30.2/30.2.4)	N/A
	Test not applicable to conditions as specified..... :	V-0	P
31	**RESISTANCE TO RUSTING**		--
	Relevant ferrous parts adequately protected against rusting		P
	Tests specified in part 2 when necessary		N/A
32	**RADIATION, TOXICITY AND SIMILAR HAZARDS**		--
	Appliance does not emit harmful radiation or present a toxic or similar hazard due to their operation in normal use		P
	Compliance is checked by the limits or tests specified in part 2, if relevant		N/A
A	**ANNEX A (INFORMATIVE)** **ROUTINE TESTS**		--

Clause	Requirement + Test	Result - Remark	Verdict
	Description of routine tests to be carried out by the manufacturer		P
B	**ANNEX B (NORMATIVE)** **APPLIANCES POWERED BY RECHARGEABLE BATTERIES THAT ARE RECHARGED IN THE APPLIANCE**		--
	The following modifications to this standard are applicable for appliances powered by batteries that are recharged in the appliance		N/A
	Three forms of construction covered:		N/A
	a) Appliance supplied directly from the supply mains or a renewable energy source, the battery charging circuitry and other supply unit circuitry incorporated within the appliance		N/A
	b) The part of the appliance incorporating the battery is supplied from the supply mains or a renewable energy source, via a detachable supply unit. The battery charging circuitry is incorporated within the part of the appliance containing the battery		N/A
	c) The part of the appliance incorporating the battery is supplied from the supply mains or a renewable energy source, via a detachable supply unit. The battery charging circuitry is incorporated within the detachable supply unit		N/A
3.1.9	Appliance operated under the following conditions:		N/A
	- the appliance, supplied by its fully charged battery, operated as specified in relevant part 2		N/A
	- the battery is charged, the battery being initially discharged to such an extent that the appliance cannot operate		N/A
	-if possible, the appliance is supplied from the supply mains through its battery charger, the battery being initially discharged to such an extent that the appliance cannot operate. The appliance is operated as specified in relevant part 2		N/A
	- if the appliance incorporates inductive coupling between two parts that are detachable from each other, the appliance is supplied from the supply mains with the detachable part removed		N/A
3.6.2	Part to be removed in order to discard the battery is not considered to be detachable		N/A
5.B.101	Appliances supplied from the supply mains tested as specified for motor-operated appliances		N/A
7.1	Battery compartment for batteries intended to be replaced by the user, marked with battery voltage (V) and polarity of the terminals .... :		N/A

Clause	Requirement + Test	Result - Remark	Verdict
	The positive terminal indicated by symbol IEC 60417-5005 and the negative terminal by symbol IEC 60417-5006		N/A
	Appliances intending to be supplied from a detachable supply unit marked with symbol IEC 60417-6181 and its type reference along with symbol ISO 7000-0790 (2004-01), or		N/A
	use only with <model designation> supply unit .. :		N/A
7.6	Additional symbols		N/A
7.12	The instructions give information regarding charging		N/A
	Instructions for appliances incorporating batteries intended to be replaced by the user include required information		N/A
	Instructions for appliances containing non user-replaceable batteries state the substance of the following:		~~N/A~~
	This appliance contains batteries that are only replaceable by skilled persons		~~N/A~~
	Instructions for appliances containing non-replaceable batteries shall state the substance of the following:		~~N/A~~
	This appliance contains batteries that are non-replaceable		~~N/A~~
	For appliances intending to be supplied from a detachable supply unit for the purposes of recharging the battery, the type reference of the detachable supply unit is stated along with the following:		N/A
	WARNING: For the purposes of recharging the battery, only use the detachable supply unit provided with this appliance		N/A
	If the symbol for detachable supply unit is used, its meaning is explained		N/A
7.15	Markings placed on the part of the appliance connected to the supply mains		N/A
	The type reference of the detachable supply unit is placed in close proximity to the symbol		N/A
8.2	Appliances having batteries that according to the instruction may be replaced by the user need only have basic insulation between live parts and the inner surface of the battery compartment		N/A
	If the appliance can be operated without batteries, double or reinforced insulation required		N/A
11.7	The battery is charged for the period stated in the instructions or 24 h ..... :		N/A
11.8	Temperature rise of the battery surface does not exceed the limit in the battery manufacturer's specification; measured (K); limit (K)..... :		N/A
	If no limit specified, the temperature rise does not exceed 20 K; measured (K) ..... :		N/A

Clause	Requirement + Test	Result - Remark	Verdict
19.1	Appliances subjected to tests of 19.B.101, 19.B.102 and 19.B.103		N/A
19.10	Not applicable		N/A
19.B.101	Appliances supplied at rated voltage for 168 h, the battery being continually charged		N/A
19.B.102	For appliances having batteries that can be removed without the aid of a tool, short-circuit of the terminals of the battery, the battery being fully charged,		N/A
19.B.103	Appliances having batteries replaceable by the user supplied at rated voltage under normal operation with the battery removed or in any position allowed by the construction		N/A
19.13	The battery does not rupture or ignite		N/A
21.B.101	Appliances having pins for insertion into socket-outlets have adequate mechanical strength		N/A
	Part of the appliance incorporating the pins subjected to the free fall test, procedure 2, of IEC 60068-2-31, the number of falls being:		N/A
	- 100, if the mass of the part does not exceed 250 g (g) :		N/A
	- 50, if the mass of the part exceeds 250 g..... :		N/A
	After the test, the requirements of 8.1, 15.1.1, 16.3 and clause 29 are met		N/A
22.3	Appliances having pins for insertion into socket-outlets tested as fully assembled as possible		N/A
25.13	An additional lining or bushing not required for interconnection cords in class III appliances or class III constructions operating at safety extra-low voltage not containing live parts		N/A
30.2	For parts of the appliance connected to the supply mains during the charging period, 30.2.3 applies		N/A
	For other parts, 30.2.2 applies		N/A
C	**ANNEX C (NORMATIVE) AGEING TEST ON MOTORS**		--
	Tests, as described, carried out when doubt with regard to the temperature classification of the insulation of a motor winding		N/A
	Test conditions as specified		N/A
D	**ANNEX D (NORMATIVE) THERMAL MOTOR PROTECTORS**		--
	Applicable to appliances having motors that incorporate thermal motor protectors necessary for compliance with the standard		P
	Test conditions as specified		P

Clause	Requirement + Test	Result - Remark	Verdict
E	**ANNEX E (NORMATIVE) NEEDLE-FLAME TEST**		**--**
	Needle-flame test carried out in accordance with IEC 60695-11-5, with the following modifications:		N/A
7	Severities		--
	The duration of application of the test flame is 30 s ± 1 s		N/A
9	Test procedure		--
9.1	The specimen so arranged that the flame can be applied to a vertical or horizontal edge as shown in the examples of Figure 1		N/A
9.2	The first paragraph does not apply		N/A
	If possible, the flame is applied at least 10 mm from a corner		N/A
9.3	The test is carried out on one specimen		N/A
	If the specimen does not withstand the test, the test may be repeated on two additional specimens, both withstanding the test		N/A
11	Evaluation of test results		--
	The duration of burning not exceeding 30 s		N/A
	However, for printed circuit boards, the duration of burning not exceeding 15 s		N/A
F	**ANNEX F (NORMATIVE) CAPACITORS**		**--**
	Capacitors likely to be permanently subjected to the supply voltage, and used for radio interference suppression or voltage dividing, comply with the following clauses of IEC 60384-14, with the following modifications:		N/A
1.5	Terms and definitions		N/A
1.5.3	Class X capacitors tested according to subclass X2		N/A
1.5.4	This subclause is applicable		N/A
1.6	Marking		N/A
	Items a) and b) are applicable		N/A
3.4	Approval testing		N/A
3.4.3.2	Table 3 is applicable as described		N/A
4.1	Visual examination and check of dimensions		N/A
	This subclause is applicable		N/A
4.2	Electrical tests		N/A
4.2.1	This subclause is applicable		N/A
4.2.5	This subclause is applicable		N/A

Clause	Requirement + Test	Result - Remark	Verdict
4.2.5.2	Only table 11 is applicable		N/A
	Values for test A apply		N/A
	However, for capacitors in heating appliances the values for test B or C apply		N/A
4.12	Damp heat, steady state		N/A
	This subclause is applicable		N/A
	Only insulation resistance and voltage proof are checked		N/A
4.13	Impulse voltage		N/A
	This subclause is applicable		N/A
4.14	Endurance		N/A
	Subclauses 4.14.1, 4.14.3, 4.14.4 and 4.14.7 are applicable		N/A
4.14.7	Only insulation resistance and voltage proof are checked		N/A
	No visible damage		N/A
4.17	Passive flammability test		N/A
	This subclause is applicable		N/A
4.18	Active flammability test		N/A
	This subclause is applicable		N/A
G	**ANNEX G (NORMATIVE)** **SAFETY ISOLATING TRANSFORMERS**		--
	The following modifications to this standard are applicable for safety isolating transformers:		N/A
7	Marking and instructions		N/A
7.1	Transformers for specific use marked with:		N/A
	-name, trademark or identification mark of the manufacturer or responsible vendor ..... :		N/A
	-model or type reference ..... :		N/A
17	Overload protection of transformers and associated circuits		N/A
	Fail-safe transformers comply with subclause 15.5 of IEC 61558-1		N/A
22	Construction		N/A
	Subclauses 19.1 and 19.1.2 of IEC 61558-2-6 are applicable		N/A
29	Clearances, creepage distances and solid insulation		P
29.1, 29.2, 29.3	The distances specified in items 2a, 2c and 3 in table 13 of IEC 61558-1 apply		P
	For insulated winding wires complying with subclause 19.12.3 of IEC 61558-1 there are no requirements for clearances or creepage distances		N/A

Clause	Requirement + Test	Result - Remark	Verdict
	For windings providing reinforced insulation, the distance specified in item 2c of table 13 of IEC 61558-1 is not assessed		N/A
	For safety isolating transformers subjected to periodic voltages with a frequency exceeding 30 kHz, the clearances, creepage distances and solid insulation values specified in IEC 60664-4 are applicable, if greater than the values specified in items 2a, 2c and 3 in table 13 of IEC 61558-1		N/A
H	**ANNEX H (NORMATIVE)** **SWITCHES**		--
	Switches comply with the following clauses of IEC 61058-1, as modified below:		N/A
	The tests of IEC 61058-1 carried out under the conditions occurring in the appliance		N/A
	Before being tested, switches are operated 20 times without load		N/A
8	Marking and documentation		N/A
	Switches are not required to be marked		N/A
	However, a switch that can be tested separately from the appliance marked with the manufacturer's name or trade mark and the type reference		N/A
13	Mechanism		N/A
	The tests may be carried out on a separate sample		N/A
15	Insulation resistance and dielectric strength		N/A
15.1	Not applicable		N/A
15.2	Not applicable		N/A
15.3	Applicable for full disconnection and micro-disconnection		N/A
17	Endurance		N/A
	Compliance is checked on three separate appliances or switches		N/A
	For 17.2.4.4, the number of cycles declared according to 7.1.4 is 10 000, unless		N/A
	otherwise specified in 24.1.3 of the relevant part 2 of IEC 60335..... :		N/A
	Switches for operation under no load and which can be operated only by a tool, and		N/A
	switches operated by hand that are interlocked so that they cannot be operated under load,		N/A
	are not subjected to the tests		N/A
	However, switches without this interlock are subjected to the test of 17.2.4.4 for 100 cycles of operation		N/A

Clause	Requirement + Test	Result - Remark	Verdict
	Subclauses 17.2.2 and 17.2.5.2 not applicable		N/A
	The ambient temperature during the test is that occurring in the appliance during the test of Clause 11 in IEC 60335-1		N/A
	The temperature rise of the terminals not more than 30 K above the temperature rise measured in clause 11 of IEC 60335-1 (K) ..... :		N/A
20	Clearances, creepage distances, solid insulation and coatings of rigid printed board assemblies		N/A
	Clause 20 is applicable to clearances across full disconnection and micro-disconnection		N/A
	It is also applicable to creepage distances for functional insulation, across full disconnection and micro-disconnection, as stated in Table 24		N/A
I	**ANNEX I (NORMATIVE)** **MOTORS HAVING BASIC INSULATION THAT IS INADEQUATE FOR THE RATED VOLTAGE OF THE APPLIANCE**		--
	The following modifications to this standard are applicable for motors having basic insulation that is inadequate for the rated voltage of the appliance:		N/A
8	Protection against access to live parts		N/A
8.1	Metal parts of the motor are considered to be bare live parts		N/A
11	Heating		N/A
11.3	The temperature rise of the body of the motor is determined instead of the temperature rise of the windings		N/A
11.8	The temperature rise of the body of the motor, where in contact with insulating material, not exceeding values in table 3 for the relevant insulating material		N/A
16	Leakage current and electric strength		N/A
16.3	Insulation between live parts of the motor and its other metal parts is not subjected to the test		N/A
19	Abnormal operation		N/A
19.1	The tests of 19.7 to 19.9 are not carried out		N/A
19.I.101	Appliance operated at rated voltage with each of the following fault conditions:		N/A
	- short circuit of the terminals of the motor, including any capacitor incorporated in the motor circuit		N/A
	- short circuit of each diode of the rectifier		N/A
	- open circuit of the supply to the motor		N/A
	- open circuit of any parallel resistor, the motor being in operation		N/A
	Only one fault simulated at a time, the tests carried out consecutively		N/A

Clause	Requirement + Test	Result - Remark	Verdict
22	Construction		N/A
22.I.101	For class I appliances incorporating a motor supplied by a rectifier circuit, the d.c. circuit being insulated from accessible parts of the appliance by double or reinforced insulation		N/A
	Compliance checked by the tests specified for double and reinforced insulation		N/A
J	**ANNEX J (NORMATIVE)** **COATED PRINTED CIRCUIT BOARDS**		--
	Testing of protective coatings of printed circuit boards carried out in accordance with IEC 60664-3 with the following modifications:		N/A
5.7	Conditioning of the test specimens		N/A
	When production samples are used, three samples of the printed circuit board are tested		N/A
5.7.1	Cold		N/A
	The test is carried out at -25 °C		N/A
5.7.3	Rapid change of temperature		N/A
	Severity 1 is specified		N/A
5.9	Additional tests		N/A
	This subclause is not applicable		N/A
K	**ANNEX K (NORMATIVE)** **OVERVOLTAGE CATEGORIES**		--
	The information on overvoltage categories is extracted from IEC 60664-1		P
	Overvoltage category is a numeral defining a transient overvoltage condition		P
	Equipment of overvoltage category IV is for use at the origin of the installation		N/A
	Equipment of overvoltage category III is equipment in fixed installations and for cases where the reliability and the availability of the equipment is subject to special requirements		N/A
	Equipment of overvoltage category II is energy consuming equipment to be supplied from the fixed installation		P
	If such equipment is subjected to special requirements with regard to reliability and availability, overvoltage category III applies		N/A
	Equipment of overvoltage category I is equipment for connection to circuits in which measures are taken to limit transient overvoltages to an appropriate low level		N/A

Clause	Requirement + Test	Result - Remark	Verdict
L	**ANNEX L (INFORMATIVE)** **GUIDANCE FOR THE MEASUREMENT OF CLEARANCES AND CREEPAGE DISTANCES**		**--**
	Information for the determination of clearances and creepage distances		P
M	**ANNEX M (NORMATIVE)** **POLLUTION DEGREE**		**--**
	The information on pollution degrees is extracted from IEC 60664-1		P
	Pollution		--
	The microenvironment determines the effect of pollution on the insulation, taking into account the macroenvironment		P
	Means may be provided to reduce pollution at the insulation by effective enclosures or similar		P
	Minimum clearances specified where pollution may be present in the microenvironment		P
	Degrees of pollution in the microenvironment		--
	For evaluating creepage distances, the following degrees of pollution in the microenvironment are established:		--
	- pollution degree 1: no pollution or only dry, non-conductive pollution occurs. The pollution has no influence		N/A
	- pollution degree 2: only non-conductive pollution occurs, except that occasionally a temporary conductivity caused by condensation is to be expected		N/A
	- pollution degree 3: conductive pollution occurs or dry non-conductive pollution occurs that becomes conductive due to condensation that is to be expected		P
	- pollution degree 4: the pollution generates persistent conductivity caused by conductive dust or by rain or snow		N/A
N	**ANNEX N (NORMATIVE)** **PROOF TRACKING TEST**		**--**
	The proof tracking test is carried out in accordance with IEC 60112 with the following modifications:		N/A
7	Test apparatus		--
7.3	Test solutions		--
	Test solution A is used		P
10	Determination of proof tracking index (PTI)		--
10.1	Procedure		P
	The proof voltage is 100V, 175V, 400V or 600V ... :	175V	P
	The test is carried out on five specimens		P

Clause	Requirement + Test	Result - Remark	Verdict
	In case of doubt, additional test with proof voltage reduced by 25V, the number of drops increased to 100		N/A
10.2	Report		N/A
	The report states if the PTI value was based on a test using 100 drops with a test voltage of (PTI-25) V		N/A
O	**ANNEX O (INFORMATIVE)** **SELECTION AND SEQUENCE OF THE TESTS OF CLAUSE 30**		--
	Description of tests for determination of resistance to heat and fire		P
P	**ANNEX P (INFORMATIVE)** **GUIDANCE FOR THE APPLICATION OF THIS STANDARD TO APPLIANCES USED IN TROPICAL CLIMATES**		--
	Modifications applicable for class 0 and 01 appliances having a rated voltage exceeding 150V, intended to be used in countries having a tropical climate and that are marked with symbol IEC 60417-6332		N/A
	Modifications may also be applied to class 1 appliances having a rated voltage exceeding 150V, intended to be used in countries having a tropical climate and that are marked with symbol IEC 60417-6332, if liable to be connected to a supply mains that excludes the protective earthing conductor		N/A
5.7	The ambient temperature for the tests of clauses 11 and 13 is 40 +3/0 °C		N/A
7.1	The appliance marked with symbol IEC 60417-6332		N/A
7.12	The instructions state that the appliance is to be supplied through a residual current device (RCD) having a rated residual operating current not exceeding 30 mA		N/A
	The instructions state that the appliance is considered to be suitable for use in countries having a tropical climate, but may also be used in other countries		N/A
	If symbol IEC 60417-6332 is used, its meaning is explained		N/A
11.8	The values of Table 3 are reduced by 15 K		N/A
13.2	The leakage current for class I appliances not exceeding 0,5 mA		N/A
15.3	The value of t is 37 °C		N/A
16.2	The leakage current for class I appliances not exceeding 0,5 mA (mA):		N/A
19.13	The leakage current test of 16.2 is applied in addition to the electric strength test of 16.3		N/A
Q	**ANNEX Q (INFORMATIVE)** **SEQUENCE OF TESTS FOR THE EVALUATION OF ELECTRONIC CIRCUITS**		--
	Description of tests for appliances incorporating electronic circuits		P

Clause	Requirement + Test	Result - Remark	Verdict
R	**ANNEX R (NORMATIVE) SOFTWARE EVALUATION**		--
	Programmable electronic circuits requiring software incorporating measures to control the fault/error conditions specified in table R.1 or R.2 validated in accordance with the requirements of this annex		N/A
R.1	Programmable electronic circuits using software		N/A
	Programmable electronic circuits requiring software incorporating measures to control the fault/error conditions specified in table R.1 or R.2 constructed so that the software does not impair compliance with the requirements of this standard		N/A
R.2	Requirements for the architecture		N/A
	Programmable electronic circuits requiring software incorporating measures to control the fault/error conditions specified in table R.1 or R.2 use measures to control and avoid software-related faults/errors in safety-related data and safety-related segments of the software		N/A
R.2.1.1	Programmable electronic circuits requiring software incorporating measures to control the fault/error conditions specified in table R.2 have one of the following structures:		N/A
	- single channel with periodic self-test and monitoring		N/A
	- dual channel (homogenous) with comparison		N/A
	- dual channel (diverse) with comparison		N/A
	Programmable electronic circuits requiring software incorporating measures to control the fault/error conditions specified in table R.1 have one of the following structures:		N/A
	- single channel with functional test		N/A
	- single channel with periodic self-test		N/A
	- dual channel without comparison		N/A
R.2.2	Measures to control faults/errors		N/A
R.2.2.1	When redundant memory with comparison is provided on two areas of the same component, the data in one area is stored in a different format from that in the other area		N/A
R.2.2.2	Programmable electronic circuits with functions requiring software incorporating measures to control the fault/error conditions specified in table R.2 and that use dual channel structures with comparison, have additional fault/error detection means for any fault/errors not detected by the comparison		N/A
R.2.2.3	For programmable electronic circuits with functions requiring software incorporating measures to control the fault/error conditions specified in table R.1 or R.2, means are provided for the recognition and control of errors in transmissions to external safety-related data paths		N/A

Clause	Requirement + Test	Result - Remark	Verdict
R.2.2.4	For programmable electronic circuits with functions requiring software incorporating measures to control the fault/error conditions specified in table R.1 or R.2, the programmable electronic circuits incorporate measures to address the fault/errors in safety-related segments and data indicated in table R.1 and R.2 as appropriate		N/A
R.2.2.5	For programmable electronic circuits with functions requiring software incorporating measures to control the fault/error conditions specified in table R.1 or R.2, detection of a fault/error occur before compliance with clause 19 is impaired		N/A
R.2.2.6	The software is referenced to relevant parts of the operating sequence and the associated hardware functions		N/A
R.2.2.7	Labels used for memory locations are unique		N/A
R.2.2.8	The software is protected from user alteration of safety-related segments and data		N/A
R.2.2.9	Software and safety-related hardware under its control is initialized and terminates before compliance with clause 19 is impaired		N/A
R.3	Measures to avoid errors		N/A
R.3.1	General		N/A
	For programmable electronic circuits with functions requiring software incorporating measures to control the fault/error conditions specified in table R.1 or R.2, the following measures to avoid systematic fault in the software are applied		N/A
	Software that incorporates measures used to control the fault/error conditions specified in table R.2 is inherently acceptable for software required to control the fault/error conditions specified in table R.1		N/A
R.3.2	Specification		N/A
R.3.2.1	Software safety requirements:	Software Id:	N/A
	The specification of the software safety requirements includes the descriptions listed		N/A
R.3.2.2	Software architecture		N/A

Clause	Requirement + Test	Result - Remark	Verdict
R.3.2.2.1	The specification of the software architecture includes the aspects listed - techniques and measures to control software faults/errors (refer to R.2.2); - interactions between hardware and software; - partitioning into modules and their allocation to the specified safety functions; - hierarchy and call structure of the modules (control flow); - interrupt handling; - data flow and restrictions on data access; - architecture and storage of data; - time-based dependencies of sequences and data	Document ref. No:	N/A
R.3.2.2.2	The architecture specification is validated against the specification of the software safety requirements by static analysis		N/A
R.3.2.3	Module design and coding		N/A
R.3.2.3.1	Based on the architecture design, software is suitably refined into modules		N/A
	Software module design and coding is implemented in a way that is traceable to the software architecture and requirements		N/A
R.3.2.3.2	Software code is structured		N/A
R.3.2.3.3	Coded software is validated against the module specification by static analysis		N/A
	The module specification is validated against the architecture specification by static analysis		N/A
R.3.3.3	Software validation		N/A
	The software is validated with reference to the requirements of the software safety requirements specification		N/A
	Compliance is checked by simulation of:		N/A
	- input signals present during normal operation		N/A
	- anticipated occurrences		N/A
	- undesired conditions requiring system action		N/A

TABLE R.1 [e] – GENERAL FAULT/ERROR CONDITIONS						
Component [a]	Fault/error	Acceptable measures [b, c]	Definitions	Document reference for applied measure	Document reference for applied test	Ver-dict
1 CPU 1.1 Registers	Stuck at	Functional test, or periodic self-test using either: static memory test, or word protection with single bit re-dundancy	H.2.16.5 H.2.16.6 H.2.19.6 H.2.19.8.2			N/A
1.2 VOID						N/A
1.3 Programme counter	Stuck at	Functional test, or Periodic self-test, or Independent time-slot monitoring, or Logical monitoring of the programme sequence	H.2.16.5 H.2.16.6 H.2.18.10.4 H.2.18.10.2			N/A
2 Interrupt handling and execution	No interrupt or too frequent interrupt	Functional test, or time-slot monitoring	H.2.16.5 H.2.18.10.4			N/A
3 Clock	Wrong frequency (for quartz synchronized clock: harmonics/ sub-harmonics only)	Frequency monitoring, or time slot monitoring	H.2.18.10.1 H.2.18.10.4			N/A
4. Memory 4.1 Invariable memory	All single bit faults	Periodic modified checksum, or multiple checksum, or word protection with single bit redundancy	H.2.19.3.1 H.2.19.3.2 H.2.19.8.2			N/A
4.2 Variable memory	DC fault	Periodic static memory test, or word protection with single bit redundancy	H.2.19.6 H.2.19.8.2			N/A

TABLE R.1 [e] – GENERAL FAULT/ERROR CONDITIONS						
Component [a]	Fault/error	Acceptable measures [b, c]	Definitions	Document reference for applied measure	Document reference for applied test	Ver-dict
4.3 Addressing (relevant to variable and invariable memory)	Stuck at	Word protection with single bit redundancy including the address	H.2.19.8.2			N/A
5 Internal data path	Stuck at	Word protection with single bit redundancy	H.2.19.8.2			N/A
5.1 VOID						N/A
5.2 Addressing	Wrong address	Word protection with single bit redundancy including the address	H.2.19.8.2			N/A
6 External communication	Hamming distance 3	Word protection with multi-bit redundancy, or CRC – single work, or Transfer redundancy, or Protocol test	H.2.19.8.1 H.2.19.4.1 H.2.18.2.2 H.2.18.14			N/A
6.1 VOID						N/A
6.2 VOID						N/A
6.3 Timing	Wrong point in time Wrong sequence	Time-slot monitoring, or scheduled transmission Time-slot and logical monitoring, or comparison of redundant communication channels by either: reciprocal comparison independent hardware comparator Logical monitoring, or time-slot monitoring, or Scheduled transmission	H.2.18.10.4 H.2.18.18 H.2.18.10.3 H.2.18.15 H.2.18.3 H.2.18.10.2 H.2.18.10.4 H.2.18.18			N/A
7 Input/output periphery	Fault conditions specified in 19.11.2	Plausibility check	H.2.18.13			N/A
7.1 VOID						N/A

TABLE R.1 [e] – GENERAL FAULT/ERROR CONDITIONS						
Component [a]	Fault/error	Acceptable measures [b, c]	Definitions	Document reference for applied measure	Document reference for applied test	Ver-dict
7.2 Analog I/O 7.2.1 A/D and D/A-converter	Fault conditions specified in 19.11.2	Plausibility check	H.2.18.13			N/A
7.2.2 Analog multiplexer	Wrong addressing	Plausibility check	H.2.18.13			N/A
8 VOID						N/A
9 Custom chips [d] e.g. ASIC, GAL, gate array	Any output outside the static and dynamic functional specification	Periodic self-test	H.2.16.6			N/A
NOTE A Stuck-at fault model denotes a fault model representing an open circuit or a non-varying signal level. A DC fault model denotes a stuck-at fault model incorporating short circuit between signal lines.						
[a] For fault/error assessment, some components are divided into their sub-functions. [b] For each sub-function in the table, the Table R.2 measure will cover the software fault/error. [c] Where more than one measure is given for a sub-function, these are alternatives. [d] To be divided as necessary by the manufacturer into sub-functions. [e] Table R.1 is applied according to the requirements of R.1 to R.2.2.9 inclusive.						

Clause	Requirement + Test	Result - Remark	Verdict
S	**ANNEX S (NORMATIVE)** **BATTERY OPERATED APPLIANCES POWERED BY BATTERIES THAT ARE NON-RECHARGEABLE OR NOT RECHARGED IN THE APPLIANCE**		--
	The following modifications to this standard are applicable for battery-operated appliances where the batteries are either non-rechargeable (primary batteries), or		P
	rechargeable batteries (secondary batteries) that are not recharged in the appliance		N/A
5.8.1	If the supply terminals for the connection of the battery have no indication of polarity, the more unfavourable polarity is applied		N/A
5.S.101	Appliances intended for use with a battery box are tested with the battery box supplied with the appliance or with the battery box recommended in the instructions		N/A
5.S.102	Appliances are tested as motor-operated appliances.		N/A

Clause	Requirement + Test	Result - Remark	Verdict
7.1	Appliances marked with the battery voltage (V) and the polarity of the terminals, unless..... ..... :		P
	the polarity is irrelevant		N/A
	Appliances also marked with:		N/A
	– name, trade mark or identification mark of the manufacturer or responsible vendor..... ..... :		P
	– model or type reference .... :		P
	– IP number according to degree of protection against ingress of water, other than IPX0 .... :		N/A
	– type reference of battery or batteries .... :		P
	If relevant, the positive terminal is indicated by the symbol IEC 60417-5005 and the negative terminal by the symbol IEC 60417-5006		P
	If appliances use more than one battery, they are marked to indicate correct polarity connection of the batteries		N/A
7.6	Additional symbols		N/A
7.12	The instructions contain the following, as applicable:		N/A
	– the types of batteries that may be used.. ..... :		P
	– how to remove and insert the batteries		P
	– non-rechargeable batteries are not to be recharged		P
	– rechargeable batteries are to be removed from the appliance before being charged		N/A
	– different types of batteries or new and used batteries are not to be mixed		N/A
	– batteries are to be inserted with the correct polarity		N/A
	– exhausted batteries are to be removed from the appliance and safely disposed of		P
	– if the appliance is to be stored unused for a long period, the batteries are removed		P
	– the supply terminals are not to be short-circuited		P
11.5	Appliances are supplied with the most unfavourable supply voltage between		N/A
	– 0,55 and 1,0 times the battery voltage, if the appliance can be used with non-rechargeable batteries		P
	– 0,75 and 1,0 times battery voltage, if the appliance is designed for use with rechargeable batteries only		N/A
	The values specified in Table S.101 for the internal resistance per cell of the battery is taken into account		N/A
19.1	The tests are carried out with the battery fully charged unless otherwise specified		N/A

Clause	Requirement + Test	Result - Remark	Verdict
19.13	The battery does not rupture or ignite		P
19.S.101	Appliances are supplied with the voltage specified in 11.5. The supply terminals having an indication of polarity are connected to the opposite polarity, unless		N/A
	such a connection is unlikely to occur due to the construction of the appliance		P
19.S.102	For appliances with provision for multiple batteries, one or more of the batteries are reversed and the appliance is operated, if reversal of batteries is allowed by the construction		N/A
25.5	The flexible leads or flexible cord used to connect an external battery or battery box in is connected to the appliance by a type X attachment		N/A
25.13	This requirement is not applicable to the flexible leads or flexible cord connecting external batteries or a battery box with an appliance		N/A
25.S.101	Appliances have suitable means for connection of the battery. If the type of battery is marked on the appliance, the means of connection is suitable for this type of battery		N/A
26.5	Terminal devices in an appliance for the connection of the flexible leads or flexible cord connecting an external battery or battery box are so located or shielded that there is no risk of accidental connection between supply terminals		N/A
30.2.3.2	There is no battery in the area of the vertical cylinder used for the consequential needle flame test, unless		N/A
	the battery is shielded by a barrier that meets the needle flame test of Annex E, or		N/A
	that comprises material classified as V-0 or V-1 according to IEC 60695-11-10		N/A
T	**ANNEX T (NORMATIVE)** **UV-C RADIATION EFFECT ON NON-METALLIC MATERIALS**		--
	Requirements for non-metallic materials subject to direct or reflected UV-C radiation exposure and whose mechanical and electrical properties are relied upon for compliance with the		N/A
	Does not apply to glass, ceramic and similar materials		N/A
	Tested as specified in ISO 4892-1 and ISO 4892-2, with the following modifications:		N/A
	Modifications to ISO 4892-1:		N/A
5.1.6	The UV-C emitter is a low pressure mercury lamp with a quartz envelope having a continuous spectral irradiance of 10 W/m2 at 254 nm		N/A

Clause	Requirement + Test	Result - Remark	Verdict
	Subclause 5.1.6.1 and Table 1 are not applicable		N/A
5.2.4	The black-panel temperature shall be 63 °C +/- 3 °C		N/A
5.3.1	Humidification of the chamber air is specified in part 2 when necessary		N/A
9	This clause is not applicable		N/A
	Modifications to ISO 4892-2:		N/A
7.1	At least three test specimens are tested		N/A
	Ten samples of internal wiring is tested		N/A
7.2	The specimens are attached to the specimen holders such that they are not subject to any stress		N/A
7.3	Apparatus prepared as specified		N/A
	The test specimens and, if used, the irradiance-measuring instrument are exposed for 1 000 h		N/A
7.4	If used, a radiometer is mounted and calibrated such that it measures the irradiance at the exposed surface of the test specimen		N/A
7.5	Material properties and test methods for parts providing mechanical support or impact resistance as specified in Table T.1		N/A
	Material properties and test method for electrical insulation of internal wiring as specified in Table T.2		N/A
8	This clause is not applicable		N/A

Detailed results

10.1	TABLE: Power input deviation				P
Input deviation of/at:	**P rated (W)**	**P measured (W)**	**Δ P**	**Required Δ P**	**Remark**
100V/50Hz	200	181	-9,5%	+ 20%	P
100V/60Hz	200	180	-10%	+ 20%	P
230V/50Hz	200	178	-11%	+ 20%	P
230V/60Hz	200	176	-12%	+ 20%	P
Supplementary information:					

10.2	TABLE: Current deviation				N/A
Current deviation of/at:	**I rated (A)**	**I measured (A)**	**Δ I**	**Required Δ I**	**Remark**
Supplementary information:					

11.8	TABLE: Heating test		P
	Test voltage (V) ..... :	243,8	—
	Ambient (°C) ..... :	23,0	—

Thermocouple locations:	**Max. temperature rise measured, Δ T (K)**	**Max. temperature rise limit, Δ T (K)**
Motor	Max. 15,6	65
Internal wire	Max. 6,2	50
Motor box	Max. 8,0	Cl.30
Gate Controller PCB	Max. 11,2	130
Switching Power Supply PCB	Max. 12,4	130
Y Capacitor	Max. 9,1	60(T85-25)
X2 Capacitor	Max. 10,3	85(T110-25)
Enclosure for plastic	Max. 4,0	Cl.30
Appliance connector	Max. 3,6	Cl.30
Test corner	Max. 0,6	60
Supplementary information: Only the worst data is recorded		

Detailed results

11.8	TABLE: Heating test, resistance method					P
	Test voltage (V)..... :			240V		—
	Ambient, t_1 (°C) ..... :			23,0		—
	Ambient, t_2 (°C) ..... :			23,3		—
Temperature rise of winding	**R_1 (Ω)**	**R_2 (Ω)**	**ΔT (K)**	**Max. ΔT (K)**	**Insulation class**	
Motor	0,44	0,54	58	65	Class A	
Supplementary information:						

13.2	TABLE: Leakage current			P
	Heating appliances: 1.15 x rated input (W) ....:		-	—
	Motor-operated and combined appliances: 1.06 x rated voltage (V) .....:		243,8	—
Leakage current between:		**I (mA)**	**Max. allowed I (mA)**	
L/N to Metal part		0,16	3,5	
L/N to Plastic part		0,03	0,25	
Supplementary information:				

13.3	TABLE: Dielectric strength		P
Test voltage applied between:		**Test potential applied (V)**	**Breakdown / flashover (Yes/No)**
L/N to Metal part		1000	No
L/N to Plastic part		3000	No
Supplementary information:			

14	TABLE: Transient overvoltages					N/A
Clearance between:	**Cl (mm)**	**Required Cl (mm)**	**Rated impulse voltage (V)**	**Impulse test voltage (V)**	**Flashover (Yes/No)**	
Supplementary information:						

Detailed results

16.2	**TABLE: Leakage current**		P
	Single phase appliances: 1.06 x rated voltage (V) .....:	243,8	—
	Three phase appliances 1.06 x rated voltage divided by √3 (V).....:	-	—

Leakage current between:	**I (mA)**	**Max. allowed I (mA)**
L/N to Metal part	0,16	3,5
L/N to Plastic part	0,02	0,25
Supplementary information:		

16.3	**TABLE: Dielectric strength**	P
Test voltage applied between:	**Test potential applied (V)**	**Breakdown / flashover (Yes/No)**
L/N to Metal part	1250	No
L/N to Plastic part	3000	Yes
Supplementary information:		

17	**TABLE: Overload protection**	P
Thermocouple locations:	**Max. temperature rise measured, Δ T (K)**	**Max. temperature rise limit, Δ T (K)**
Transformer winding	42,6	150
Supplementary information:		

17	**TABLE: Overload protection, resistance method**					N/A
	Test voltage (V) ..... :					—
	Ambient, t1 (°C)..... :					—
	Ambient, t2 (°C)..... :					—
Temperature of winding:	**R1 (Ω)**	**R2 (Ω)**	**Δ T (K)**	**T (°C)**	**Max. T (°C)**	
Supplementary information:						

Detailed results

19.7	**TABLE: Abnormal operation, locked rotor/moving parts**				P
	Test voltage (V) ..... :	230			—
	Ambient, t1 (°C) ..... :	23,0			—
	Ambient, t2 (°C) ..... :	23,3			—
Temperature of winding:	**R1 (Ω)**	**R2 (Ω)**	**Δ T (K)**	**T (°C)**	**Max. T (°C)**
Motor	0,44	0,57	76	62	200
Supplementary information:					

19	**Abnormal operation conditions**						**P**
Operational characteristics			**YES/NO**	**Operational conditions**			
Are there electronic circuits to control the appliance operation?			Yes	-			
Are there “off” or “stand-by” position?			Yes	-			
The unintended operation of the appliance results in dangerous malfunction?			No	-			
Sub-clause	**Operating conditions description**	**Test results description**	**PEC description**	**EMP 19.11.4**	**Software type required**	**19.11.3 PEC**	**Final result**
19.2	N.A	N.A	N.A	N.A	N.A	N.A	N/A
19.3	N.A	N.A	N.A	N.A	N.A	N.A	N/A
19.4	N.A	N.A	N.A	N.A	N.A	N.A	N/A
19.5	N.A	N.A	N.A	N.A	N.A	N.A	N/A
19.6	N.A	N.A	N.A	N.A	N.A	N.A	N/A
19.7	Motor block	No harm	N.A	N.A	N.A	N.A	P
19.8	N.A	N.A	N.A	N.A	N.A	N.A	N/A
19.9	N.A	N.A	N.A	N.A	N.A	N.A	N/A
19.10	N.A	N.A	N.A	N.A	N.A	N.A	N/A
19.11.2	See table 19.11.2	No hazards	N.A	N.A	N.A	N.A	P
19.11.4.8	N.A	N.A	N.A	N.A	N.A	N.A	N/A
19.10X	N.A	N.A	N.A	N.A	N.A	N.A	N/A
Supplementary information:							

Detailed results

19.9	TABLE: Abnormal operation, running overload					N/A
	Test voltage (V) ..... :					—
	Ambient, t1 (°C) ..... :					—
	Ambient, t2 (°C) ..... :					—
Temperature of winding:		**R1 (Ω)**	**R2 (Ω)**	**Δ T (K)**	**T (°C)**	**Max. T (°C)**
Supplementary information:						

19.13	TABLE: Abnormal operation, temperature rises	P
Thermocouple locations:	**Max. temperature rise measured, Δ T (K)**	**Max. temperature rise limit, Δ T (K)**
Test corner	1,0	150
Motor box	26,1	Cl.30
Enclosure	7,7	Cl.30
Supplementary information:		

21.1	TABLE: Impact resistance		P
Impacts per surface	**Surface tested**	**Impact energy (Nm)**	**Comments**
3	Enclosure	0,5	Pass
Supplementary information:			

24.1	TABLE: Critical components information				P
Object / part No.	**Manufacturer/ trademark**	**Type / model**	**Technical data**	**Standard**	**Mark(s) of conformity[1)]**
Gate Barrier Operator	AETS	DC PRO 36	24 VDC servo operator, IP54	EN 60335-1	Test with appliance
Servo Motor	AETS / OEM	SF-DZJX-3L-0.9-8S	36 VDC, ~250–300 W, encoder, S3 duty	EN 60335-1	Test with appliance
Motor Controller	AETS / OEM	AETS-BC36	36 VDC, soft start/stop, O/C & O/V protection	EN 60335-1	Test with appliance
Gearbox	AETS / OEM	Integrated	Worm/planetary ≥1:60, oil-filled	EN 60335-1	Test with appliance
Boom Arm (Telescopic)	AETS	6 m (3+3 m)	Aluminium 80×45 & 72×37 mm, reflective tape	EN 60335-1	Test with appliance

24.1	TABLE: Critical components information	P

Object / part No.	Manufacturer/ trademark	Type / model	Technical data	Standard	Mark(s) of conformity[1)]
Counter-Spring Set	AETS	Matched springs	Color-coded, boom matched	EN 60335-1	Test with appliance
Cabinet & Base Plate	AETS	Steel housing	Powder-coated steel, IP54	EN 60335-1	Test with appliance
Boom LED Light	AETS / OEM	LEDGR6000	24 VDC, red/green, IP65	EN 60335-1	Test with appliance
Miniature Circuit Breaker (MCB)	ANDELI/HEMN	DZ47-63	C16, 400V~, 6000A	IEC 60898-1	DPC-14895
Fan	RX	6015S	DC 12V	EN 60335-1	Test with appliance
Gate Controller PCB	AETS/OEM	AETS-DC-PRO-CB-01	94 V-0, 130°C	EN 60335-1	Test with appliance
Internal wire	AETS/OEM	UL2468	300V, 80°C, VW-1, 24AWG	EN 60335-1	Test with appliance
Relay	NINGBO HUIKE NEW ERA ELECTRICAL APPLIANCES CO., LTD.	HK4100F-DC12V-SHG	3A, 250V AC 3A, 30V DC	EN 61810-1:2008	TUV R 50222414
Switching Power Supply PCB	AETS/OEM	FR- PCB	94 V-0, 130°C	EN 60335-1	Test with appliance
Switching Power Supply Transformer	Andeli Electronics	GKU-240-24	240W / 24V SMPS; power supply input: AC 100–240V, 50/60Hz; output: DC 24V, 10A max; rated output power: 240W; insulation class: Class B, 130°C;	EN 60335-1	Test with appliance
X2 Capacitor	Ultra Tech Xiphi Enterprise Co. Ltd.	HQX	0,1 µF ±10%, 275 V~, X2, 40/110/56/B	DIN EN 60384-14 (VDE 0565-1-1):2014-04; EN 60384-14:2013-08 DIN EN 60384-14/A1 (VDE 0565-1-1/A1):2017-04; EN 60384-14:2013/A1:2016	VDE 40015608

24.1	TABLE: Critical components information				P
Object / part No.	**Manufacturer/ trademark**	**Type / model**	**Technical data**	**Standard**	**Mark(s) of conformity[1)]**
Fuse	Dongguan Chevron Electronic Technology Co., Ltd.	SET	T5A, 250V	DIN EN 60127-1 (VDE 0820-1):2015-12; EN 60127-1:2006+A1:2011+A2:2015 DIN EN 60127-3 (VDE 0820-3):2021-08; EN 60127-3:2015+A1:2020	VDE 40038565
Y Capacitor	Dongguan City Dafu Electronics Co. Ltd.	CT7	2,2 nF ±20%; 440V; 25/085/21	DIN EN 60384-14 (VDE 0565-1-1):2014-04; EN 60384-14:2013-08 DIN EN 60384-14/A1 (VDE 0565-1-1/A1):2017-04; EN 60384-14:2013/A1:2016	VDE 40041523
Remote control PCB	AETS/OEM	CHJ-189A V1.0.	94 V-0, 130°C	EN 60335-1	Test with appliance
Power cord	Shanghai Jsin cable	SPVC-ZR-105	4x1,0mm^2	EN 50525-2-11	Report No.B-R2201A0106 Tested with Beida Shenzhen

Supplementary information:

[1)] Provided evidence ensures the agreed level of compliance. See OD-CB2039.

Detailed results

29.1	TABLE: Clearances		P
	Overvoltage category .... :	II	—

		Type of insulation:				
Rated impulse voltage (V):	**Min. cl (mm)**	**Basic (mm)**	**Supplementary (mm)**	**Reinforced (mm)**	**Functional (mm)**	**Verdict / Remark**
330	0,2* / 0,5 / 0,8**	-	-	-	-	N/A
500	0,2* / **0,5** / 0,8**	-	-	-	X	P
800	0,2* / 0,5 / 0,8**	-	-	-	-	N/A
1 500	0,5 / 0,8** / 1,0***	-	-	-	-	N/A
2 500	**1,5** / 2,0***	X	X	-	X	P
4 000	**3,0** / 3,5***	-	-	X	-	P
6 000	5,5 / 6,0***	-	-	-	-	N/A
8 000	8,0 / 8,5***	-	-	-	-	N/A
10 000	11,0 / 11,5***	-	-	-	-	N/A

Supplementary information:

*) For tracks on printed circuit boards if pollution degree 1 and 2
**) For pollution degree 3
***) If the construction is affected by wear, distortion, movement of the parts or during assembly

Detailed results

29.2	TABLE: Creepage distances, basic, supplementary and reinforced insulation										P
Working voltage (V):	**Creepage distance (mm) Pollution degree**										
	1	**2**			**3**			**Type of insulation**			
		Material group			**Material group**						
		I	**II**	**IIIa/IIIb**	**I**	**II**	**IIIa/IIIb***	**B****	**S****	**R****	**Verdict**
≤50	0,18	0,6	0,85	1,2	1,5	1,7	1,9		—	—	N/A
≤50	0,18	0,6	0,85	1,2	1,5	1,7	1,9	—		—	N/A
≤50	0,36	1,2	1,7	2,4	3,0	3,4	3,8	—	—		N/A
125	0,28	0,75	1,05	1,5	1,9	2,1	2,4		—	—	N/A
125	0,28	0,75	1,05	1,5	1,9	2,1	2,4	—		—	N/A
125	0,56	1,5	2,1	3,0	3,8	4,2	4,8	—	—		N/A
250	0,56	1,25	1,8	2,5	3,2	3,6	**4,0**	X	—	—	P
250	0,56	1,25	1,8	2,5	3,2	3,6	**4,0**	—	X	—	P
250	1,12	2,5	3,6	5,0	6,4	7,2	**8,0**	—	—	X	P
400	1,0	2,0	2,8	4,0	5,0	5,6	6,3		—	—	N/A
400	1,0	2,0	2,8	4,0	5,0	5,6	6,3	—		—	N/A
400	2,0	4,0	5,6	8,0	10,0	11,2	12,6	—	—		N/A
500	1,3	2,5	3,6	5,0	6,3	7,1	8,0		—	—	N/A
500	1,3	2,5	3,6	5,0	6,3	7,1	8,0	—		—	N/A
500	2,6	5,0	7,2	10,0	12,6	14,2	16,0	—	—		N/A
>630 and ≤800	1,8	3,2	4,5	6,3	8,0	9,0	10,0		—	—	N/A
>630 and ≤800	1,8	3,2	4,5	6,3	8,0	9,0	10,0	—		—	N/A
>630 and ≤800	3,6	6,4	9,0	12,6	16,0	18,0	20,0	—	—		N/A
>800 and ≤1000	2,4	4,0	5,6	8,0	10,0	11,0	12,5		—	—	N/A
>800 and ≤1000	2,4	4,0	5,6	8,0	10,0	11,0	12,5	—		—	N/A
>800 and ≤1000	4,8	8,0	11,2	16,0	20,0	22,0	25,0	—	—		N/A
>1000 and ≤1250	3,2	5,0	7,1	10,0	12,5	14,0	16,0		—	—	N/A
>1000 and ≤1250	3,2	5,0	7,1	10,0	12,5	14,0	16,0	—		—	N/A
>1000 and ≤1250	6,4	10,0	14,2	20,0	25,0	28,0	32,0	—	—		N/A
>1250 and ≤1600	4,2	6,3	9,0	12,5	16,0	18,0	20,0		—	—	N/A
>1250 and ≤1600	4,2	6,3	9,0	12,5	16,0	18,0	20,0	—		—	N/A
>1250 and ≤1600	8,4	12,6	18,0	25,0	32,0	36,0	40,0	—	—		N/A

29.2	TABLE: Creepage distances, basic, supplementary and reinforced insulation										P
Working voltage (V):	**Creepage distance (mm) Pollution degree**										
	1	**2**			**3**			**Type of insulation**			
		Material group			**Material group**						
		I	**II**	**IIIa/IIIb**	**I**	**II**	**IIIa/IIIb***	**B****	**S****	**R****	**Verdict**
>1600 and ≤2000	5,6	8,0	11,0	16,0	20,0	22,0	25,0		—	—	N/A
>1600 and ≤2000	5,6	8,0	11,0	16,0	20,0	22,0	25,0	—		—	N/A
>1600 and ≤2000	11,2	16,0	22,0	32,0	40,0	44,0	50,0	—	—		N/A
>2000 and ≤2500	7,5	10,0	14,0	20,0	25,0	28,0	32,0		—	—	N/A
>2000 and ≤2500	7,5	10,0	14,0	20,0	25,0	28,0	32,0	—		—	N/A
>2000 and ≤2500	15,0	20,0	28,0	40,0	50,0	56,0	64,0	—	—		N/A
>2500 and ≤3200	10,0	12,5	18,0	25,0	32,0	36,0	40,0		—	—	N/A
>2500 and ≤3200	10,0	12,5	18,0	25,0	32,0	36,0	40,0	—		—	N/A
>2500 and ≤3200	20,0	25,0	36,0	50,0	64,0	72,0	80,0	—	—		N/A
>3200 and ≤4000	12,5	16,0	22,0	32,0	40,0	45,0	50,0		—	—	N/A
>3200 and ≤4000	12,5	16,0	22,0	32,0	40,0	45,0	50,0	—		—	N/A
>3200 and ≤4000	25,0	32,0	44,0	64,0	80,0	90,0	100,0	—	—		N/A
>4000 and ≤5000	16,0	20,0	28,0	40,0	50,0	56,0	63,0		—	—	N/A
>4000 and ≤5000	16,0	20,0	28,0	40,0	50,0	56,0	63,0	—		—	N/A
>4000 and ≤5000	32,0	40,0	56,0	80,0	100,0	112,0	126,0	—	—		N/A
>5000 and ≤6300	20,0	25,0	36,0	50,0	63,0	71,0	80,0		—	—	N/A
>5000 and ≤6300	20,0	25,0	36,0	50,0	63,0	71,0	80,0	—		—	N/A
>5000 and ≤6300	40,0	50,0	72,0	100,0	126,0	142,0	160,0	—	—		N/A
>6300 and ≤8000	25,0	32,0	45,0	63,0	80,0	90,0	100,0		—	—	N/A
>6300 and ≤8000	25,0	32,0	45,0	63,0	80,0	90,0	100,0	—		—	N/A
>6300 and ≤8000	50,0	64,0	90,0	126,0	160,0	180,0	200,0	—	—		N/A
>8000 and ≤10000	32,0	40,0	56,0	80,0	100,0	110,0	125,0		—	—	N/A

Supplementary information:

*) Material group IIIb is allowed if the working voltage does not exceed 50 V

**) B = Basic insulation, S = Supplementary insulation, R = Reinforced insulation

Detailed results

29.2	TABLE: Creepage distances, functional insulation							P
Working voltage (V):	**Creepage distance (mm) Pollution degree**							
	1	**2**			**3**			
		Material group			**Material group**			
		I	**II**	**IIIa/IIIb**	**I**	**II**	**IIIa/IIIb***	**Verdict / Remark**
≤10	0,08	0,4	0,4	0,4	1,0	1,0	1,0	N/A
50	0,16	0,56	0,8	1,1	1,4	1,6	1,8	N/A
125	0,25	0,71	1,0	1,4	1,8	2,0	2,2	N/A
250	0,42	1,0	1,4	2,0	2,5	2,8	**3,2**	P
400	0,75	1,6	2,2	3,2	4,0	4,5	5,0	N/A
500	1,0	2,0	2,8	4,0	5,0	5,6	6,3	N/A
>630 and ≤800	1,8	3,2	4,5	6,3	8,0	9,0	10,0	N/A
>800 and ≤1000	2,4	4,0	5,6	8,0	10,0	11,0	12,5	N/A
>1000 and ≤1250	3,2	5,0	7,1	10,0	12,5	14,0	16,0	N/A
>1250 and ≤1600	4,2	6,3	9,0	12,5	16,0	18,0	20,0	N/A
>1600 and ≤2000	5,6	8,0	11,0	16,0	20,0	22,0	25,0	N/A
>2000 and ≤2500	7,5	10,0	14,0	20,0	25,0	28,0	32,0	N/A
>2500 and ≤3200	10,0	12,5	18,0	25,0	32,0	36,0	40,0	N/A
>3200 and ≤4000	12,5	16,0	22,0	32,0	40,0	45,0	50,0	N/A
>4000 and ≤5000	16,0	20,0	28,0	40,0	50,0	56,0	63,0	N/A
>5000 and ≤6300	20,0	25,0	36,0	50,0	63,0	71,0	80,0	N/A
>6300 and ≤8000	25,0	32,0	45,0	63,0	80,0	90,0	100,0	N/A
>8000 and ≤10000	32,0	40,0	56,0	80,0	100,0	110,0	125,0	N/A
>10000 and ≤12500	40,0	50,0	71,0	100,0	125,0	140,0	160,0	N/A
Supplementary information: *) Material group IIIb is allowed if the working voltage does not exceed 50 V								

Detailed results

30.1	TABLE: Ball Pressure Test of Thermoplastics		P
Allowed impression diameter (mm) ..... :		2,0	—
Object/ Part No./ Material	**Manufacturer/ trademark**	**Test temperature (°C)**	**Impression diameter (mm)**
Enclosure	See table 24.1	75	1,1
Motor box	See table 24.1	75	1,0
Protection cover	See table 24.1	75	1,0
Supplementary information: Only the worst data is recorded			

30.2	TABLE: Resistance to heat and fire - Glow wire tests							P
Object/ Part No./ Material	**Manufacturer/ trademark**	**Glow wire test (GWT); (°C)**						**Verdict**
		550	**650**		**750**		**850**	
			te	**ti**	**te**	**ti**		
Switch	See table 24.1	-	-	-	0s	0s	-	P
Enclosure	See table 24.1	NI	-	-	-	-	-	P
Protection cover	See table 24.1	NI	-	-	-	-	-	P
Motor box	See table 24.1	NI	-	-	-	-	-	P
Connector	See table 24.1	-	-	-	0s	0s	-	P
Object/ Part No./ Material	**Manufacturer/ trademark**	**Glow-wire flammability index (GWFI), °C**				**GW ignition temp. (GWIT), °C**		**Verdict**
		550	**650**	**750**	**850**	**675**	**775**	
The test specimen passed the glow wire test (GWT) with no ignition [(te – ti) ≤ 2s] (Yes/No) :								Yes
If no, then surrounding parts passed the needle-flame test of annex E (Yes/No) ..... :								N/A
The test specimen passed the test by virtue of most of the flaming material being withdrawn with the glow-wire (Yes/No)?..... :								Yes
Ignition of the specified layer placed underneath the test specimen (Yes/No) ..... :								No
Supplementary information: - 550 °C GWT not relevant (or applicable) to parts of material classified at least HB40 or if relevant HBF - The GWIT pre-selection option, the 850 °C GWFI pre-selection option, and the 850 °C GWT are not relevant (or applicable) for attended appliances								

Detailed results

30.2/30.2.4	TABLE: Needle- flame test (NFT)				N/A
Object/ Part No./ Material	**Manufacturer/ trademark**	**Duration of application of test flame (ta); (s)**	**Ignition of specified layer Yes/No**	**Duration of burning (tb) (s)**	**Verdict**

Supplementary information:

- NFT not relevant (or applicable) for Parts of material classified as V-0 or V-1
- NFT not relevant (or applicable) for Base material of PCBs classified as V-0 or if relevant VTM-0

Detailed results

Clause	Requirement + Test	Result - Remark	Verdict
Differences according to ..... :	EN 60335-1:2012 + A11:2014 + A13:2017 + A1:2019 + A14:2019 + A2:2019 + A15:2021 + A16:2023 EN 62233:2008		
	CENELEC COMMON MODIFICATIONS (EN)		
6.1	Delete “class 0” and “class 01”		N/A
7.1	Single-phase appliances to be connected to the supply mains: 230 V covered		P
	Multi-phase appliances to be connected to the supply mains: 400 V covered		N/A
7.12	The instructions include the substance of the following:		
	- this appliance can be used by children aged from 8 years and above and persons with reduced physical, sensory or mental capabilities or lack of experience and knowledge if they have been given supervision or instruction concerning use of the appliance in a safe way and understand the hazards involved		P
	- children shall not play with the appliance		P
	- cleaning and user maintenance shall not be made by children without supervision		N/A
8.1.1	Also test probe 18 of EN 61032 is applied		P
	The appliance being in every possible position during the test, except that		P
	appliances normally used on the floor and having a mass exceeding 40 kg are not tilted		N/A
	The force on the probe in the straight position is increased to 10 N when probe 18 is used		P
	When using test probe 18 the appliance is fully assembled as in normal use without any parts removed, and		P
	parts intended to be removed for user maintenance are also not removed		P
8.1.3	Instead of test probe B, test probe 18 and test probe 13, for appliances other than those of class II, test probe 41 of IEC 61032 is applied with a force not exceeding 1 N to live parts of visibly glowing heating elements, all poles of which can be disconnected by a single switching action		N/A
8.2	Compliance is checked by inspection and by applying the test probes of EN 61032 in accordance with the conditions specified in 8.1.1		P

Clause	Requirement + Test	Result - Remark	Verdict
	Test probe B and probe 18 of EN 61032 are applied to built-in appliances and fixed appliances only after installation		N/A
15.1.2	Appliances with an automatic cord reel tested with the cord in the most unfavourable position so that the reeling of the wet cord may affect electrical insulation during operation, the cord not being dried before reeling		N/A
20.2	For appliances having hazardous moving parts, due to their working function, e.g. the needle of a sewing machine, tools of kitchen machines or the blade of an electrical knife, full protection is not possible for performing their intended use		P
	When using a test probe similar to test probe B of EN 61032, having a circular stop face and applied with a force of 5N, the accessories and detachable covers are removed		P
	When using test probe 18 it is applied with a force of 2,5N on the appliance fully assembled		P
22.12	Other parts intended to be detached during use, maintenance or cleaning (e.g. batteries, battery covers, lids, attachments, steam nozzles) are not considered as parts providing a similar function as handles, knobs, grips, levers		N/A
22.17	The requirement is not applicable to built-in appliances		N/A
22.44	An appliance is child-appealing if one of the following criteria is present:		
	- appliance decorated using faces, cartoon like characters, or similar images		N/A
	- appliance using shapes representing animals, characters, persons or scale models		N/A
	An appliance is child-appealing if more than one of the following criteria are present:		
	- using non-functional light (functional light is e.g. illumination of an object or area, signal indicating status of an appliance)		N/A
	- using non-functional sound (e.g. music)		N/A
	- using non-functional movement		N/A
	If the appliance is child-appealing and		
	- has a mass less than 4 kg, and		N/A
	- is mounted or normally intended for use at a height less than 850 mm,		N/A
	the following conditions are met:		N/A
	- surface temperature rise requirements not exceeded		N/A

Clause	Requirement + Test	Result - Remark	Verdict
	- hazardous moving parts not accessible		N/A
	- live parts not accessible		N/A
	- liquid temperature requirement not exceeded,		N/A
	unless for vessels in which two independent and sequential actions are needed to access the liquid		N/A
	- the requirement of 22.12 is applicable for all accessible parts of the appliance		N/A
24.1	Components comply with the safety requirements specified in the relevant EN standards as far as they reasonably apply		P
	Motors are not required to comply with EN 60034-1, but tested as part of the appliance according to this standard		P
	Relays are tested as part of the appliance according to this standard		P
	Relays may be alternatively tested to EN 60730-1 and the additional requirements in EN 60335-1		N/A
	The requirements of Clause 29 of this standard apply between live parts of components and accessible parts of the appliance		P
	Components may comply with the requirements for clearances and creepage distances for functional insulation as specified in the relevant component standard		P
	The requirements of 30.2 of this standard apply to parts of non-metallic material in components including parts of non-metallic material supporting current-carrying connections inside components		P
	Components that have not been tested and shown to comply with the EN standard for the relevant component are tested according to the requirements of 30.2 of this standard		P
	Components that have been tested and shown to comply with the resistance to fire requirements in the EN standard for the relevant component need not be retested provided that:		
	- the severity specified in the component standard is not less than the severity specified in 30.2, and		N/A
	- the test report for the component states the values of t_e and t_i acc. to EN 60695-2-11		N/A
	If the above two conditions are not satisfied, the component is tested as part of the appliance		N/A

Clause	Requirement + Test	Result - Remark	Verdict
	Power electronic converter circuits are not required to comply with EN 62477-1, but tested as part of the appliance according to this standard		N/A
	Unless components have been tested and found to comply with the relevant EN standard for the number of cycles specified, they are tested in accordance with 24.1.1 to 24.1.9		N/A
	For components mentioned in 24.1.1 to 24.1.9, no additional tests specified in the relevant EN standard for the component are necessary other than those specified in 24.1.1 to 24.1.9		N/A
	Components that have not been tested and found to comply with the relevant EN standard, and		P
	components that are not marked or not used in accordance with their marking,		P
	are tested in accordance with the conditions occurring in the appliance, the number of samples being that required by the relevant standard		P
	Lamp-holders and starter-holders that have not been tested and found to comply with the relevant EN standard are tested as a part of the appliance and additionally comply with the gauging and interchangeability requirements of the relevant EN standard under the conditions occurring in the appliance		N/A
	Where the relevant EN standard specifies these gauging and interchangeability requirements at elevated temperatures, the temperatures measured during the tests of Clause 11 are used		N/A
	There are no additional tests specified for nationally standardized plugs such as those detailed in IEC/TR 60083 or connectors complying with the standard sheets of EN 60320-1 and EN 60309, unless they are specifically mentioned in the text of this standard		P
	Plugs and socket-outlets and other connecting devices of interconnection cords are not interchangeable with plugs and socket-outlets listed in IEC/TR 60083 or IEC 60906-1, or		P
	with connectors and appliance inlets complying with the standard sheets of EN 60320-1, if		N/A
	direct supply to these parts from the supply mains gives rise to a hazard		N/A
	For plugs used in CENELEC countries Annex ZH applies		N/A

Clause	Requirement + Test	Result - Remark	Verdict
24.Z1	Type S2 and S3 capacitors according to EN 60252-1 are not required to undergo the testing as required by 30.2.2 and 30.2.3.1		N/A
25.1	Plugs and pins for insertion into socket outlets follow the relevant standards sheets in Annex ZH		N/A
25.7	Rubber sheathed cords (60245 IEC 53) are not suitable for appliances intended to be used outdoors, or		N/A
	when they are liable to be exposed to significant amount of ultraviolet radiation		N/A
25.25	Instead of IEC/TR 60083, dimensions of the pins and engagement face of plugs of appliances that are inserted into socket-outlets are in accordance with the dimensions of the relevant plug standard		N/A
	Common plugs and socket-outlets types in CENELEC countries as shown in Annex ZH		N/A
26.11	Conductors connected by soldering are not considered to be positioned or fixed so that reliance is not placed upon the soldering alone to maintain them in position,		P
	unless they are held in place near the terminals independently of the solder		N/A
29.3.Z1	Appliance constructed so that if there is a possibility of damaging the insulation during installation, the insulation withstands the scratch and penetration test of 21.2		N/A
32	Compliance regarding electromagnetic fields is checked according to EN 62233		P
Annex I, 19.I.101	The appliance is supplied at rated voltage and operated under normal operation with each of the fault conditions specified		N/A
	The duration of any of the tests is as specified in 19.7		N/A
ZA	**ANNEX ZA (**NORMATIVE) **SPECIAL NATIONAL CONDITIONS (EN)**		
	Denmark, Sweden, Norway and Finland		
7.12.8	The maximum inlet water pressure is at least 1,0 MPa ....:		N/A
	Norway		
19.5	The test is also applicable to appliances intended to be permanently connected to fixed wiring		N/A

Clause	Requirement + Test	Result - Remark	Verdict
	Norway		
22.2	The second paragraph of this subclause, dealing with single-phase, permanently connected class I appliances having heating elements, is not applicable due to the supply system		N/A
	Denmark		
22.47	The maximum inlet water pressure is at least 1,0 MPa ....:		N/A
	Ireland, United Kingdom and Cyprus		
25.8	In the table, the line >10 A and ≤16 A is replaced with:		
	> 10 and ≤ 13 1,25 (1,0)[b]		N/A
	> 13 and ≤ 16 1,5 (1,0)[b]		N/A
ZB	**ANNEX ZB** (INFORMATIVE) **A-DEVIATIONS**		
	Ireland		
25.1 and 25.25	These regulations apply to all plugs for domestic use at a voltage of not less than 200 V and in general allow only plugs complying with I.S. 401:1997, or equivalent, to be fitted to domestic appliances		N/A
	United Kingdom		
25.1 and 25.25	These regulations apply to all plugs for domestic use at a voltage of not less than 200 V and in general allow only plugs to BS 1363 to be fitted to domestic appliances.		N/A
	It also allows plugs to BS 4573 and EN 50075 to be fitted to shavers and toothbrushes		N/A
ZC	**ANNEX ZC** (NORMATIVE) **NORMATIVE REFERENCES TO INTERNATIONAL PUBLICATIONS WITH THEIR CORRESPONDING EUROPEAN PUBLICATIONS**		
	A list of documents referred to in the text of this standard in such a way that some or all of their content constitutes requirements of this document		N/A

Clause	Requirement + Test	Result - Remark	Verdict
ZD	**ANNEX ZD** (INFORMATIVE) **IEC and CENELEC CODE DESIGNATIONS FOR FLEXIBLE CORDS**		
	List of IEC and CENELEC code designations for flexible cords		P
ZE	**ANNEX ZE** (INFORMATIVE) **SPECIFIC ADDITIONAL REQUIREMENTS FOR APPLIANCES AND MACHINES INTENDED FOR COMMERCIAL USE**		
7.1	Business name and full address of the manufacturer and, where applicable, his authorized representative .....:		N/A
	Model or type reference .....:		N/A
	Serial number, if any		N/A
	Production year		N/A
	Designation of the appliance .....:		N/A
7.12	Instructions provided with the appliance so that the appliance can be used safely		N/A
	The instructions contain at least the following information:		
	- the business name and full address of the manufacturer and, where applicable, his authorized representative		N/A
	- model or type reference of the appliance as marked on the appliance itself, except for the serial number		N/A
	- the designation of the appliance together with its explanation in case it is given by a combination of letters and/or numbers		N/A
	- the general description of the appliance, when needed due to the complexity of the appliance		N/A
	- specific precautions required during installation, operation, adjusting, user maintenance, cleaning, repairing or moving		N/A
	- when needed drawings, diagrams, descriptions and explanations necessary for the safe use and user maintenance of the appliance		N/A
	- the possible reasonably foreseeable misuse and, whenever relevant, a warning against the effects it may have on the safe use of the appliance		N/A
	The words “Original instructions” appear on the language version(s) verified by the manufacturer or by the authorized representative		N/A

Clause	Requirement + Test	Result - Remark	Verdict
	When a translation of the original instructions has been provided by a person introducing the appliance on the market; the meaning of the sentence "Translation of the original instructions" appear in the relevant instructions delivered with the appliance		N/A
	The instructions for maintenance/service to be done by specialized personnel, mandated by the manufacturer or the authorized representative may be supplied in only one Community language which the specialized personnel understand		N/A
	The instructions indicate the type and frequency of inspections and maintenance required for safe operation including the preventive maintenance measures		N/A
7.12.ZE1	If needed for specific appliances, the following information to be given:		
	- on use, transportation, assembly, dismantling when out of service, testing or foreseeable breakdowns, if these operations have consequences on stability of the appliance in order to avoid overturning, falling or uncontrolled movements of the appliance or of its component parts		N/A
	- on how to maintain adequate mechanical stability when in use, during transportation, assembly, dismantling, scrapping and any other action involving the appliance		N/A
	- on the protective measures to be taken by the user, including, where appropriate, the personal protective equipment to be provided		N/A
	- on the operating method to be followed in the event of accident or breakdown; if a blockage is likely to occur the operating method to safely unblock the appliance		N/A
	- on the specifications on the spare parts to be used, when these affect the health and safety of the operator		N/A
	- on airborne noise emissions, determined and declared in accordance with the relevant Part 2, which includes:		
	- the A-weighted emission sound pressure level at workstations, where this exceeds 70 dB(A) .....;		N/A
	- where this level does not exceed 70 dB(A), this fact is indicated		N/A
	- the peak C-weighted instantaneous sound pressure value at workstations, where this exceeds 63 Pa (130 dB in relation to 20 µPa) .....:		N/A

Clause	Requirement + Test	Result - Remark	Verdict
	- the A-weighted sound power level emitted by the machinery, where the A-weighted emission sound pressure level at workstations exceeds 80 dB(A).....:		N/A
7.12.ZE2	The instructions include a warning to disconnect the appliance from its power source during service and when replacing parts		N/A
	If the removal of the plug is foreseen, it is clearly indicated that the removal of the plug is such that an operator can check from any of the points to which he has access that the plug remains removed		N/A
	If this is not possible, due to the construction of the appliance or its installation, a disconnection with a locking system in the isolated position is provided		N/A
19.11.4.8	The appliance continues to operate, without causing any hazard to the user, from the same point in its operating cycle at which the voltage fluctuation occurred, or		N/A
	a manual operation is required to restart it		N/A
20.1	Appliances and their components and fittings have adequate mechanical stability during transportation, assembly, dismantling and any other action involving the appliance		N/A
20.2	Dangerous moving transmission parts safeguarded either by design or guards		N/A
	When guards are used, they are fixed guards, interlocking movable guards or protective devices		N/A
	Moving parts directly involved in the function of the appliance which cannot be made completely inaccessible fitted with:		
	- fixed guards or interlocking movable guards preventing access to those sections of the parts that are not used in the work, and		N/A
	- adjustable guards restricting access to those sections of the moving parts where access is necessary		N/A
	Interlocking movable guards used where frequent access is required		N/A
21.1	Appliances and their components and fittings have adequate mechanical strength and is constructed to withstand such rough handling that may be expected in normal use, during transportation, assembly, dismantling, scrapping and any other action involving the appliance		N/A
22.ZE.1	For appliances provided with a seat, the seat gives adequate stability		N/A

Clause	Requirement + Test	Result - Remark	Verdict
	The distance between the seat and the control devices capable of being adapted to the operator		N/A
22.ZE.2	For appliances provided with separate devices for the start and the stop functions, the stop function is unambiguously identifiable and does always override the start function		N/A
	For appliances provided with one device performing the start and the stop function, the stop function is unambiguously identifiable and does always override the start function		N/A
22.ZE.3	Appliances designed in such a way that incorrect mounting is avoided, if this can lead to an unsafe situation		N/A
	If this is not possible, information on the correct mounting is given directly on the part and/or the enclosure		N/A
22.ZE.4	Where the weight, size or shape prevents appliances from being moved manually, they are fitted with attachments for lifting gear, or		N/A
	so designed that they can be fitted with such attachments, or		N/A
	be shaped in such a way that standard lifting gear can easily be used		N/A
	Appliances to be moved manually are constructed or equipped so that they can be moved easily and safely		N/A
22.ZE.5	The fixing systems of fixed guards which prevent access to hazardous moving transmission parts only removable with the use of tools		N/A
	If such guards have to be removed by the user for routine cleaning or maintenance their fixing systems remain attached to the fixed guards or to the machine after removal		N/A
	Where possible, guards are incapable of remaining in place without their fixings		N/A
	This does not apply if, after removal of the screws, or if the component is incorrectly repositioned, the appliance becomes inoperative		N/A
	Movable guards are interlocked		N/A
	The interlocking devices prevent the start of hazardous appliance functions until the guards are fixed in their position, and give a stop command whenever they are no longer closed		N/A

Clause	Requirement + Test	Result - Remark	Verdict
	Where it is possible for an operator to reach the danger zone before the risk due to hazardous appliance functions has ceased, movable guards associated with a guard locking device in addition to an interlocking device that:		
	- prevents the start of hazardous appliance functions until the guard is closed and locked, and		N/A
	- keeps the guard closed and locked until the risk of injury from the hazardous appliance functions has ceased		N/A
	Interlocking movable guards remain attached to the appliance when open, and		N/A
	they are designed and constructed in such a way that they can be adjusted only by means of an intentional action		N/A
22.ZE.6	Interlocking movable guards designed in such a way that the absence or failure of one of their components prevents starting or stops the hazardous appliance functions		N/A
	The guard is opened to the extent needed to cause the interlocking to operate and is then closed, the number of operations being defined in the specific Part 2 :		N/A
	After this test any defect that may be expected in normal use is applied to the interlock system, including interruption of the supply, only one defect being simulated at a time		N/A
	After these tests the interlock system is fit for further use		N/A
22.ZE.7	Adjustable guards restricting access to areas of the moving parts strictly necessary for the work are:		
	- adjustable manually or automatically, depending on the type of work involved, and		N/A
	- readily adjustable without the use of tools		N/A
22.ZE.8	In case of interruption, re-establishment after an interruption or fluctuation in whatever manner of the power supply, the appliance does not restart		N/A
	However, automatic restarting of the operation is allowed if the appliance may continue to operate, without causing any hazard to the user, from the same point in its operating cycle at which the voltage interruption or fluctuation occurred		N/A
22.ZE.9	Appliances fitted with means to isolate them from all energy sources		N/A
	Such isolators are clearly identified, and		N/A

Clause	Requirement + Test	Result - Remark	Verdict
	they are capable of being locked if reconnection endanger persons		N/A
	After the energy source is disconnected, it is possible to dissipate any energy remaining or stored in the circuits of the appliance without risk to persons		N/A
22.ZE.10	Noise reduction is achieved by applying measures at source to control noise, for example EN ISO 11688-1:2009		N/A
	The success of the applied noise reduction measures is assessed based on the actual noise emission values in relation to other machines of the same type with comparable non-acoustical technical data		N/A
	Compliance is checked by the noise test code, if any, given in part 2		N/A
ZF	**ANNEX ZF** (INFORMATIVE) **CRITERIA APPLIED FOR THE ALLOCATION OF PRODUCTS COVERED BY STANDARDS IN THE EN 60335 SERIES UNDER LVD OR MD**		
	List of standards under CENELEC/TC61 with the allocation under the LVD (Low Voltage Directive) or the MD (Machinery Directive).....:	MD	P
ZG	**ANNEX ZG** (NORMATIVE) **UV APPLIANCES**		
	The following modifications to this standard apply to appliances having UV emitters		N/A
	This annex is not applicable to appliances covered by the scopes of IEC 60335-2-27, IEC 60335-2-59 or IEC 60335-2-109		N/A
7.12.ZG	The instructions for appliances incorporating UVC emitters include the substance of the following: WARNING — This appliance contains a UV emitter. Do not stare at the light source		N/A
32	For appliances incorporating UV emitters the manufacturer delivers a declaration providing evidence that the plastic material exposed to the radiation is UV resistant		N/A
ZH	**ANNEX ZH** (INFORMATIVE) **Common plug and socket-outlet types in CENELEC countries**		
	In general, supply cords of single-phase appliances having a rated current not exceeding 16 A are fitted with a plug complying with the following standard sheets:		

Clause	Requirement + Test	Result - Remark	Verdict
	- for class I appliances or class II appliances with functional earth, standard sheet EU2, EU3 or EU4:		N/A
	- for class II appliances, standard sheet EU5, EU6 or EU7 .....:		N/A
	There are exemptions or differences in certain CENELEC countries		N/A
ZI	**ANNEX ZI** (INFORMATIVE) **Information on the application of A11:2014 to EN 60335-1:2012** **CENELEC CLC/TC 61(SEC)2096A**		
	Clarification of the application of parts 2 in conjunction with the 2002 or 2012 version of EN 60335-1		P
ZZA	**ANNEX ZZA** (INFORMATIVE) **RELATIONSHIP BETWEEN THIS EUROPEAN STANDARD AND THE SAFETY OBJECTIVES OF DIRECTIVE 2014/35/EU [2014 OJ L96} AIMED TO BE COVERED**		
	This standard provides one means of conforming to safety objectives of Directive 2014/35/EU		N/A
	When cited in the Official Journal under that Directive, compliance with the normative clauses of this standard given in Table ZZA.1 confers a presumption of conformity with the safety objectives of that Directive and associated EFTA regulations		N/A
	Compliance with this Part 1 when used together with the relevant Part 2 provides one means of conformity with the safety objectives		N/A
ZZB	**ANNEX ZZB** (INFORMATIVE) **RELATIONSHIP BETWEEN THIS EUROPEAN STANDARD AND THE ESSENTIAL REQUIREMENTS OF DIRECTIVE 2006/42/EC AIMED TO BE COVERED**		
	This standard provides one means of conforming to essential requirements of EU Directive 2006/42/EC		P
	When cited in the Official Journal under that Directive, compliance with the normative clauses of this standard given in Table ZZB.1 confers a presumption of conformity with the essential requirements of that Directive and associated EFTA regulations		P
	Compliance with this Part 1 when used together with the relevant Part 2 provides one means of conformity with the essential health and safety requirements		P
	ANNEX EN 62233:2008 + AC:2008 **EMF- ELECTROMAGNETICS FIELDS**		

Clause	Requirement + Test	Result - Remark	Verdict
	The tested product also complies with the requirements of EN 62233:2008		
	Limit ……100%	3,411%	P

Result remarks:
P: Pass, Complies with the requirements.
F: Fail, does not comply with the requirements.
N/T: Not tested.
N/A: Not applicable
I: Informative
P2: Complies with the requirements, regarding the construction a measurement is not necessary.

Pictures

Sample photo:



Overview of sample



Overview of sample



Overview of sample



Overview of sample

Pictures

Sample photo:

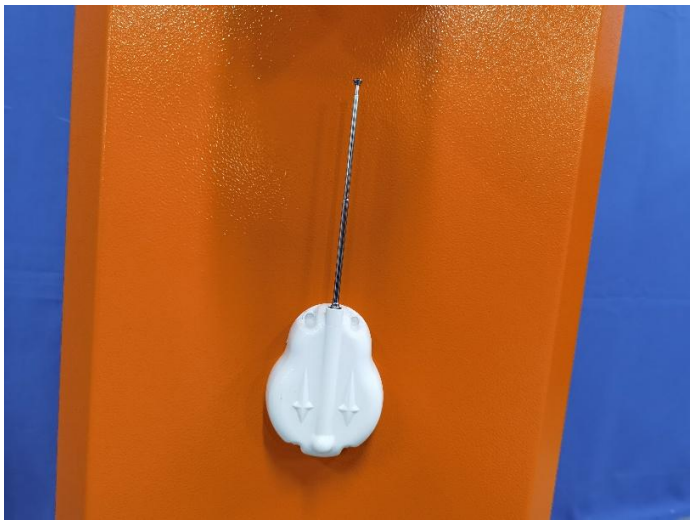

Overview of sample



Internal view of sample

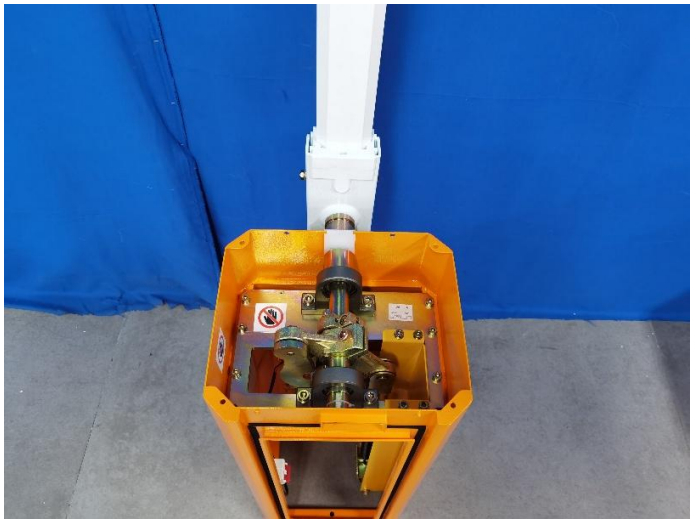

Internal view of sample



Internal view of sample

Pictures

Sample photo:



Internal view of sample



Internal view of sample



Internal view of sample

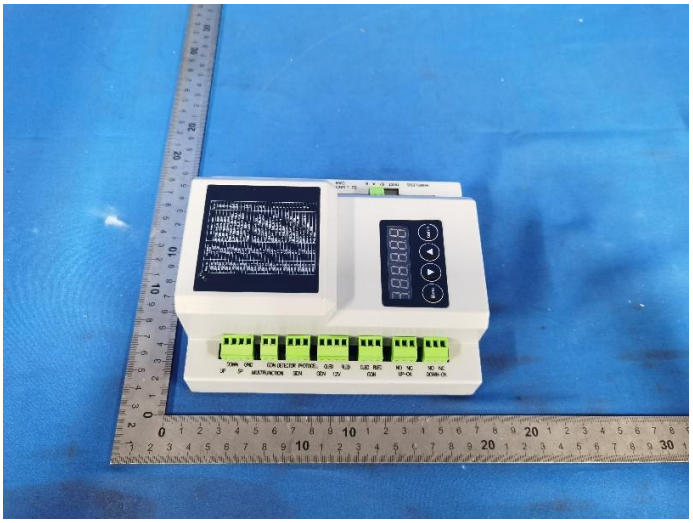

Internal view of sample

Pictures

Sample photo:

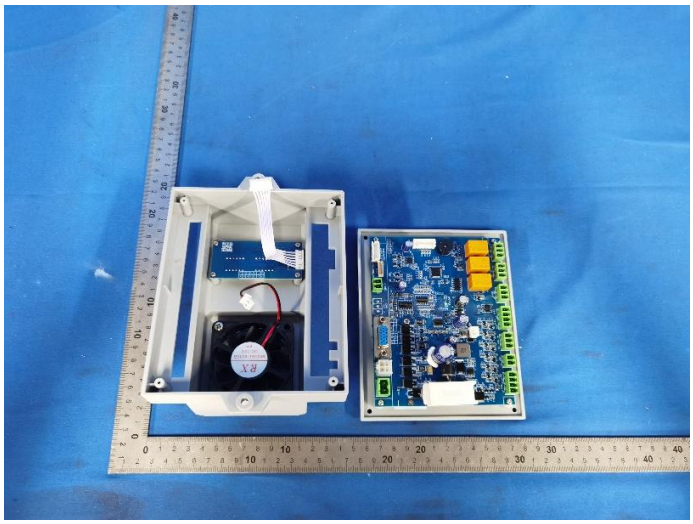

Internal view of sample

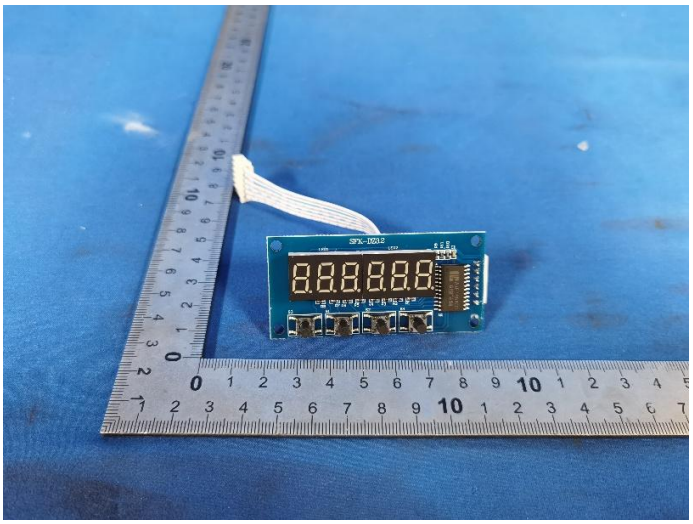

Internal view of sample

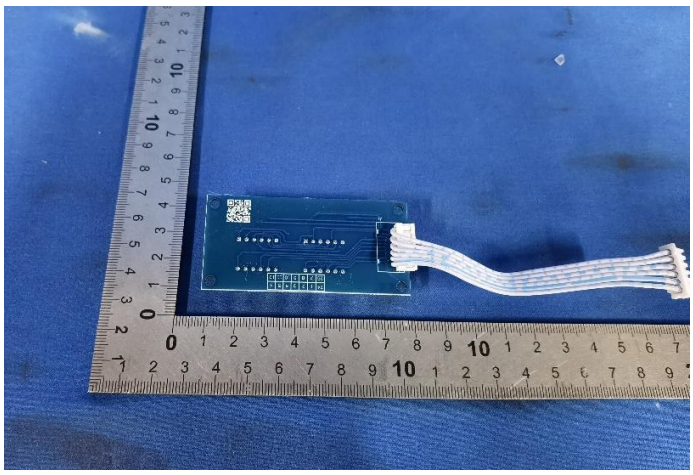

Internal view of sample



Internal view of sample

Pictures

Sample photo:

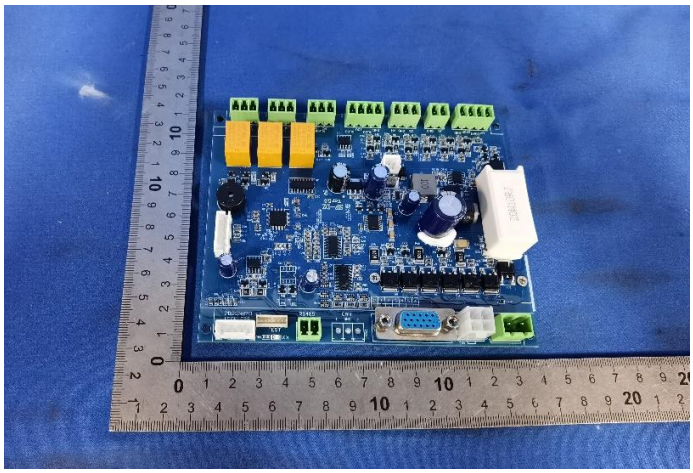

Internal view of sample

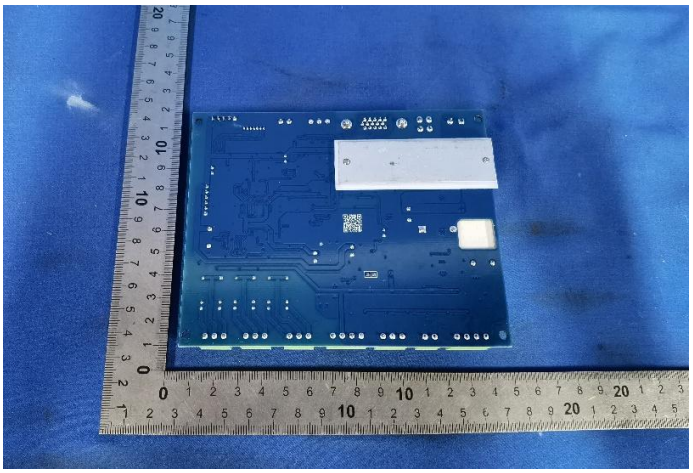

Internal view of sample

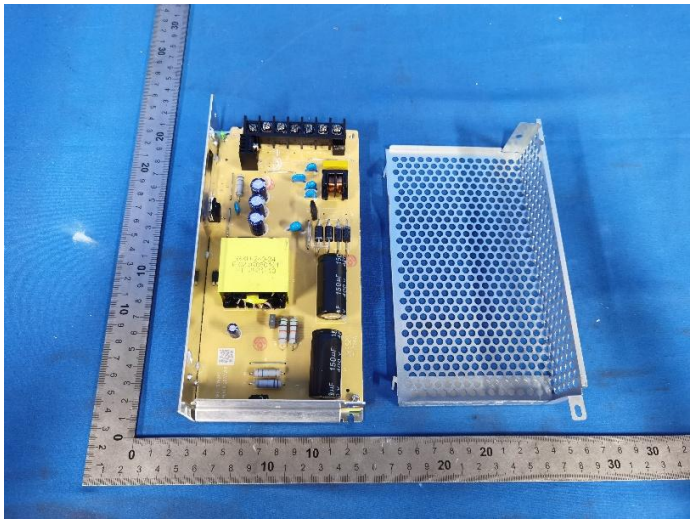

Internal view of sample

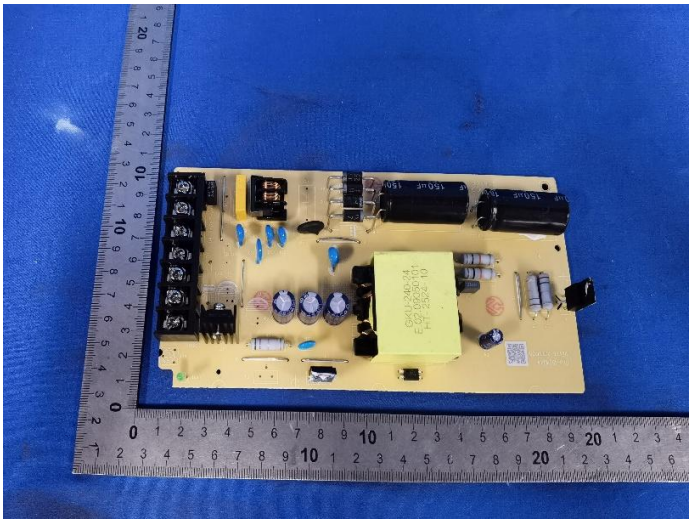

Internal view of sample

Pictures

Sample photo:

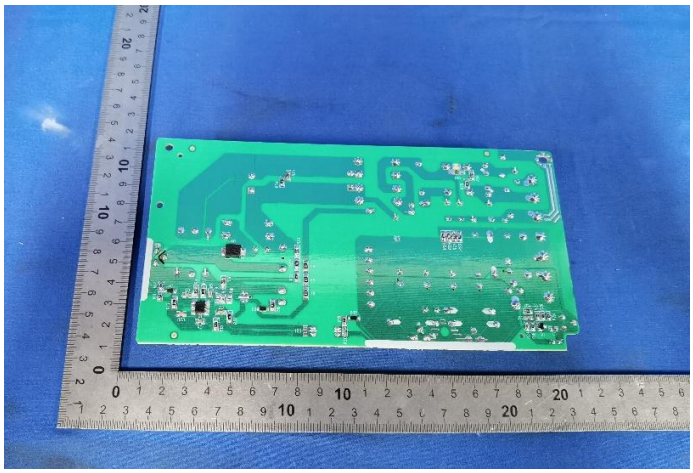

Internal view of sample



Rating label



Remote control



Remote control

End of the report

The test result(s) and conclusion(s) in this report relate only to the sample(s) as received and the method /regulation section(s) tested as described herein. If it is not further specified in the report, the decision rule for stating conformity is based on the QIMA decision rule.(https://www.qima.com/conditions-of-service#decisionRule).This test report may not be reproduced in whole or in part, without the written approval of QIMA Testing (Shanghai) Limited.

CE EMC TEST REPORT

Product: Barrier Gate

Model: DC- PRO36

Report No.: HTT202605517ER

Issued Date: May. 19, 2026

Issued for:

AETS AUTOMATIC PARKING SYSTEMS MANUFACTURING F.Z.E
Gate-1-Warehouse Block-G3, WarehouseG1 26, Ajman Free Zone,
Ajman, U.A.E

Issued By:

Shenzhen HTT Technology Co., Ltd.
1F, B Building, Huafeng International Robotics Industrial Park,
Gushu, Xixiang Street, Bao'an District, Shenzhen

Note: *This report shall not be reproduced except in full, without the written approval of Shenzhen HTT Technology Co., Ltd. This document may be altered or revised by Shenzhen HTT Technology Co., Ltd. personnel only, and shall be noted in the revision section of the document. The test results in the report only apply to the tested sample.*

This report shall not be reproduced except in full, without the written approval of Shenzhen HTT Technology Co., Ltd.

TABLE OF CONTENTS

1 TEST CERTIFICATION 3
2 TEST RESULT SUMMARY 4
3 EUT DESCRIPTION 5
4 TEST METHODOLOGY 6
4.1. DECISION OF FINAL TEST MODE 6
4.2. EUT SYSTEM OPERATION 6
5 SETUP OF EQUIPMENT UNDER TEST 7
5.1. DESCRIPTION OF SUPPORT UNITS 7
5.2. CONFIGURATION OF SYSTEM UNDER TEST 7
6 FACILITIES AND ACCREDITATIONS 8
6.1. FACILITIES 8
6.2. MEASUREMENT UNCERTAINTY 8
7 EMISSION TEST 9
7.1. CONDUCTED EMISSION MEASUREMENT 9
7.2. RADIATED EMISSION MEASUREMENT 14
7.3. HARMONICS CURRENT MEASUREMENT 19
7.4. VOLTAGE FLUCTUATION AND FLICKS MEASUREMENT 22
8 IMMUNITY TEST 24
8.1. GENERAL DESCRIPTION 24
8.2. GENERAL PERFORMANCE CRITERIA DESCRIPTION 25
8.3. ELECTROSTATIC DISCHARGE (ESD) 26
8.4. RADIATED, RADIO-FREQUENCY, ELECTROMAGNETIC FIELD (RS) 30
8.5. ELECTRICAL FAST TRANSIENT (EFT) 33
8.6. SURGE IMMUNITY TEST 36
8.7. CONDUCTED RADIO FREQUENCY DISTURBANCES (CS) 39
8.8. POWER FREQUENCY MAGNETIC FIELD 42
8.9. VOLTAGE DIP & VOLTAGE INTERRUPTIONS 44
9 PHOTOGRAPHS OF EUT 46

Hotline: 400-6655-351 Tel: 0755-23595200 Fax: 0755-23595201 http://www.httprc.com

1 TEST CERTIFICATION

Product:	Barrier Gate
Model:	DC- PRO36
Applicant:	AETS AUTOMATIC PARKING SYSTEMS MANUFACTURING F.Z.E Gate-1-Warehouse Block-G3, WarehouseG1 26, Ajman Free Zone, Ajman, U.A.E
Manufacturer:	AETS AUTOMATIC PARKING SYSTEMS MANUFACTURING F.Z.E Gate-1-Warehouse Block-G3, WarehouseG1 26, Ajman Free Zone, Ajman, U.A.E
Trade Mark:	AETS - AGMATIC
Tested:	May. 13, 2026 ~ May. 19, 2026
Applicable Standards:	**EN 55032:2015+A11:2020** **EN IEC 61000-3-2: 2019 +A2:2024** **EN 61000-3-3:2013+A2:2021+AC:2022-01** **EN 55035:2017+A11:2020**

Deviation from Applicable Standard
None

The above equipment has been tested by Shenzhen HTT Technology Co., Ltd. and found compliance with the requirements set forth in the technical standards mentioned above. The results of testing in this report apply only to the product/system, which was tested. Other similar equipment will not necessarily produce the same results due to production tolerance and measurement uncertainties.

Tested By: Jeremy Zhang ***Date:*** ***May. 19, 2026***

Check By: Bruce Zhu ***Date:*** ***May. 19, 2026***

Approved By: Kevin Yang ***Date:*** ***May. 19, 2026***

(Kevin Yang)

Hotline: 400-6655-351 Tel: 0755-23595200 Fax: 0755-23595201 http://www.httprc.com

2 TEST RESULT SUMMARY

EMISSION			
Standard	**Item**	**Result**	**Remarks**
EN 55032:2015+A11:2020	Conducted (Main Port)	Pass	Meet Class B limit
	Radiated	Pass	Meet Class B limit
EN IEC 61000-3-2: 2019 +A2:2024	Harmonic current emissions	Pass	Meets the requirements
EN 61000-3-3:2013+A2:2021+ AC:2022-01	Voltage fluctuations & flicker	Pass	Meets the requirements

IMMUNITY【EN 55035:2017+A11:2020】			
Standard	**Item**	**Result**	**Remarks**
EN 61000-4-2:2009	ESD	Pass	Meets the requirements of Performance Criterion B
EN 61000-4-3:2006+A1:2008 +A2:2010	RS	Pass	Meets the requirements of Performance Criterion A
EN 61000-4-4:2012	EFT	Pass	Meets the requirements of Performance Criterion B
EN 61000-4-5:2014+A1:2017	Surge	Pass	Meets the requirements of Performance Criterion B
EN 61000-4-6:2014+AC:2015	CS	Pass	Meets the requirements of Performance Criterion A
EN 61000-4-8: 2010	PFMF	Pass	Meets the requirements of Performance Criterion A
EN IEC 61000-4-11:2020	Voltage dips & voltage variations	Pass	Meets the requirements of Voltage dips: 1) >95% reduction performance Criterion B 2) 30% reduction performance Criterion C Voltage variations: 1)>95% reduction performance Criterion C

Note: 1. The test result judgment is decided by the limit of test standard

2. The information of measurement uncertainty is available upon the customer's request.

Hotline: 400-6655-351 Tel: 0755-23595200 Fax: 0755-23595201 http://www.httprc.com

3 EUT DESCRIPTION

Product	Barrier Gate
Model	DC- PRO36
Trade Mark	AETS - AGMATIC
Applicant	AETS AUTOMATIC PARKING SYSTEMS MANUFACTURING F.Z.E
EUT Type	☒ Engineering Sample. ☐ Product Sample, ☐ Mass Product Sample.
Serial Number	N/A
Power Rating	AC 100-230V, 50/60Hz, 200W

I/O PORT

I/O PORT TYPES	Q'TY	TESTED WITH
N/A	N/A	N/A

Model list and Models difference

No.	Model Number	Tested With
1	DC- PRO36	☒

4 TEST METHODOLOGY

4.1. DECISION OF FINAL TEST MODE

The EUT was tested together with the thereinafter additional components, and a configuration, which produced the worst emission levels, was selected and recorded in this report.

The following test mode(s) were scanned during the preliminary test:

Pre-Test Mode		
Emission	Conducted Emission	Mode : Working
	Radiated Emission	Mode : Working

After the preliminary scan, the following test mode was found to produce the highest emission level.

The Worst Test Mode		
Emission	Conducted Emission	Mode : Working
	Radiated Emission	Mode : Working

4.2. EUT SYSTEM OPERATION

1. Set up EUT with the support equipments.
2. Make sure the EUT work normally during the test.

5 SETUP OF EQUIPMENT UNDER TEST

5.1. DESCRIPTION OF SUPPORT UNITS

The EUT has been tested as an independent unit together with other necessary accessories or support units. The following support units or accessories were used to form a representative test configuration during the tests.

No.	Equipment	Model No.	Serial No.	FCC ID	Trade Name	Data Cable	Power Cord
1	PC	dx2700	CNG7140T7P	N/A	HP	Unshielded 1.4m	Unshielded 1.6m
2	Monitor	HPL1706V	CND74535YZ	N/A	HP	Unshielded 1.2m	Unshielded 1.6m
3	Keyboard	SK-2880	435302-AA1	N/A	HP	Unshielded 1.2m	N/A
4	Mouse	N/A	N/A	N/A	HP	Unshielded 1.2m	N/A

Note:

1) All the equipment/cables were placed in the worst-case configuration to maximize the emission during the test.
2) Grounding was established in accordance with the manufacturer's requirements and conditions for the intended use.

5.2. CONFIGURATION OF SYSTEM UNDER TEST

N/A

6 FACILITIES AND ACCREDITATIONS

6.1. FACILITIES

All measurement facilities used to collect the measurement data are located at HTT Lab.

The sites are constructed in conformance with the requirements of ANSI C63.4 and CISPR Publication 32. All receiving equipment conforms to CISPR Publication 16-1, “Radio Interference Measuring Apparatus and Measurement Methods.”

6.2. MEASUREMENT UNCERTAINTY

Where relevant, the following measurement uncertainty levels have been estimated for tests performed on the EUT as specified in CISPR 16-4-2:

Measurement	Frequency	Uncertainty
Conducted emission	150kHz~30MHz	+/- 2.66dB
Radiated emission	30MHz ~1000MHz	+/- 3.45dB
Harmonic current emission	/	0.634%
Voltage fluctuations & flicker	/	0.780%

This uncertainty represents an expanded uncertainty expressed at approximately the 95% confidence level using a coverage factor of k=2.

7 EMISSION TEST

7.1. CONDUCTED EMISSION MEASUREMENT

7.1.1. LIMITS

FREQUENCY (MHz)	Class A (dBuV)		Class B (dBuV)	
	Quasi-peak	Average	Quasi-peak	Average
0.15 - 0.5	79	66	66 - 56	56 - 46
0.50 - 5.0	73	60	56	46
5.0 - 30.0	73	60	60	50

NOTE:
(1) The lower limit shall apply at the transition frequencies.
(2) The limit decreases in line with the logarithm of the frequency in the range of 0.15 to 0.50 MHz.
(3) All emanations from a class A/B digital device or system, including any network of conductors and apparatus connected thereto, shall not exceed the level of field strengths specified above.

7.1.2. TEST INSTRUMENTS

Conducted Emission Shielding Room Test Site (843)				
Equipment	**Manufacturer**	**Model**	**Serial Number**	**Calibration date**
EMI Test Receiver	Rohde & Schwarz	ESCS30	845550/030	2026.04.20
LISN	Rohde & Schwarz	ESH3-Z5	100181	2026.04.20
Attenuator	Robinson	6810.17A	6810.17A	2026.04.20
Cable Line	Robinson	Z302S-NJ-BNCJ-1.5M	18126545	2026.04.20
Test Software	EZ	EZ-EMC (Ver. EMC-CON 3A1.1)	N/A	N/A

NOTE: 1. The calibration interval of the above test instruments is 12 months and the calibrations are traceable to international system unit (SI).
2. N.C.R = No Calibration Request.

7.1.3. TEST PROCEDURES

Procedure of Preliminary Test

The EUT and Support equipment, if needed, was set up as per the test configuration to simulate typical usage per the user's manual. When the EUT is a tabletop system, a wooden table with a height of 0.8 meters is used and is placed on the ground plane as per EN55032 (see Test Facility for the dimensions of the ground plane used). When the EUT is a floor standing equipment, it is placed on the ground plane, which has a 3-12 mm non-conductive covering to insulate the EUT from the ground plane.

All I/O cables were positioned to simulate typical actual usage as per EN55032.

The EUT test program was started. Emissions were measured on each current carrying line of the EUT using an EMI Test Receiver connected to the LISN powering the EUT.

The Receiver scanned from 150kHz to 30MHz for emissions in each of the test modes.

During the above scans, the emissions were maximized by cable manipulation.

The test mode(s) described in Item 3.1 were scanned during the preliminary test.

After the preliminary scan, we found the test mode described in Item 3.1 producing the highest emission level.

The EUT configuration and cable configuration of the above highest emission levels were recorded for reference of the final test.

Procedure of Final Test

EUT and support equipment were set up on the test bench as per the configuration with highest emission level in the preliminary test.

A scan was taken on both power lines, Line 1 and Line 2, recording at least the six highest emissions. Emission frequency and amplitude were recorded into a computer in which correction factors were used to calculate the emission level and compare reading to the applicable limit.

The test data of the worst-case condition(s) was recorded.

Hotline: 400-6655-351 Tel: 0755-23595200 Fax: 0755-23595201 http://www.httprc.com

7.1.4. TEST SETUP

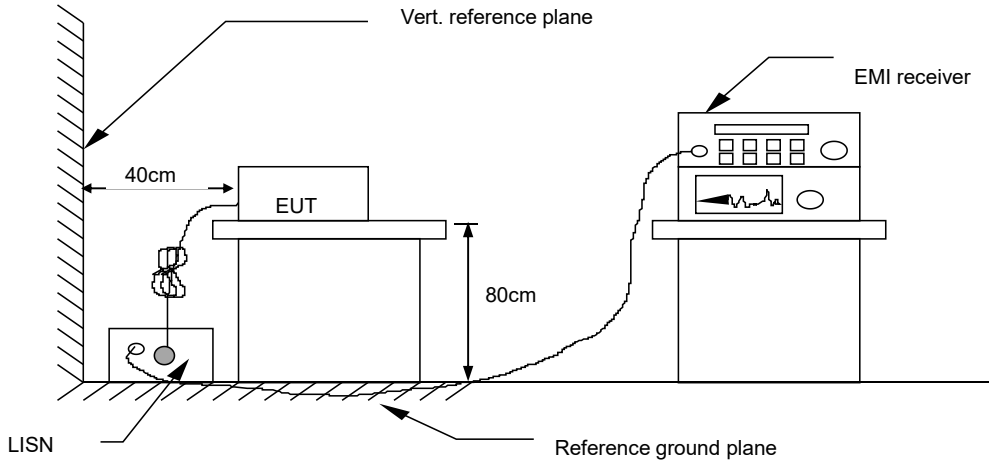

For the actual test configuration, please refer to the related item – Photographs of the Test Configuration.

7.1.5. TEST RESULTS

6dB Bandwidth	10 KHz	**Environmental Conditions**	26°C, 55% RH
Test Mode	Working	**Detector Function**	Peak / Quasi-peak/AV
Test Result	Pass	**Test By**	Jeremy Zhang

NOTE:

L1 = Line One (Live Line) / L2 = Line Two (Neutral Line).

"---" denotes the emission level was or more than 2dB below the Average limit, so no re-check anymore.

Freq. = Emission frequency in MHz

Reading level(dBuV) = Receiver reading

Corr. Factor (dB) = Anttenuator factor + Cable loss

Level (dBuV) = Reading level(dBuV) + Corr. Factor (dB)

Limit (dBuV) = Limit stated in standard

Margin (dB) = Level (dBuV) – Limits (dBuV)

Q.P.=Quasi-Peak

Conducted Emission Measurement

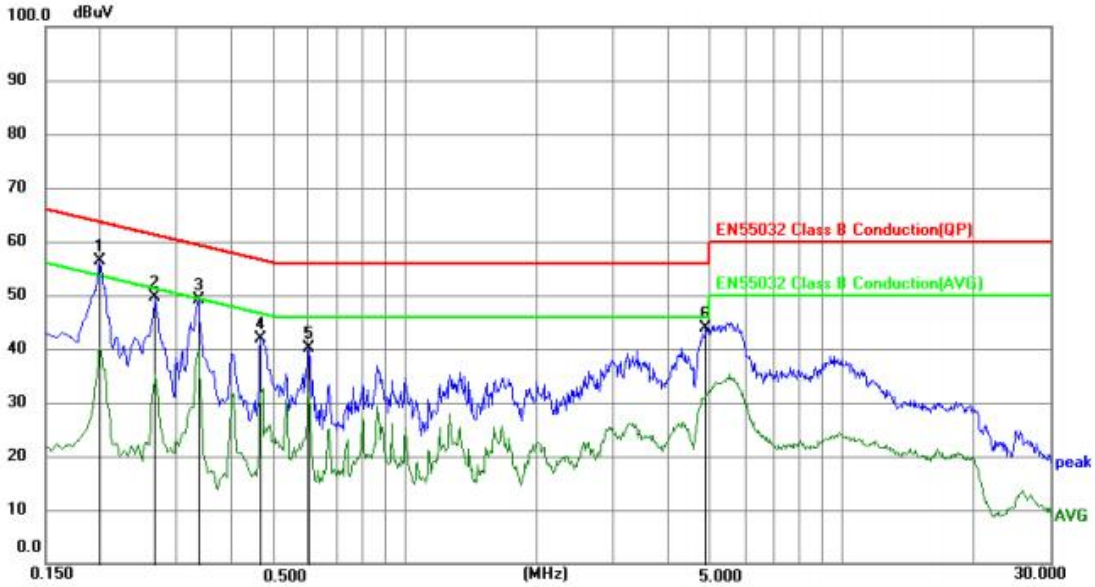

Site LAB Phase: *L1* Temperature: (C)

Limit: EN55032 Class B Conduction(QP) Power: Humidity: %RH

No.	Mk.	Freq.	Reading Level	Correct Factor	Measure-ment	Limit	Over		
		MHz		dB	dBuV	dBuV	dB	Detector	Comment
1	*	0.1996	46.08	10.21	56.29	63.63	-7.34	peak	
2		0.2672	39.51	10.23	49.74	61.20	-11.46	peak	
3		0.3356	38.85	10.25	49.10	59.31	-10.21	peak	
4		0.4661	31.66	10.28	41.94	56.58	-14.64	peak	
5		0.6011	29.92	10.32	40.24	56.00	-15.76	peak	
6		4.8738	33.25	10.61	43.86	56.00	-12.14	peak	

Hotline: 400-6655-351 Tel: 0755-23595200 Fax: 0755-23595201 http://www.httprc.com

Conducted Emission Measurement

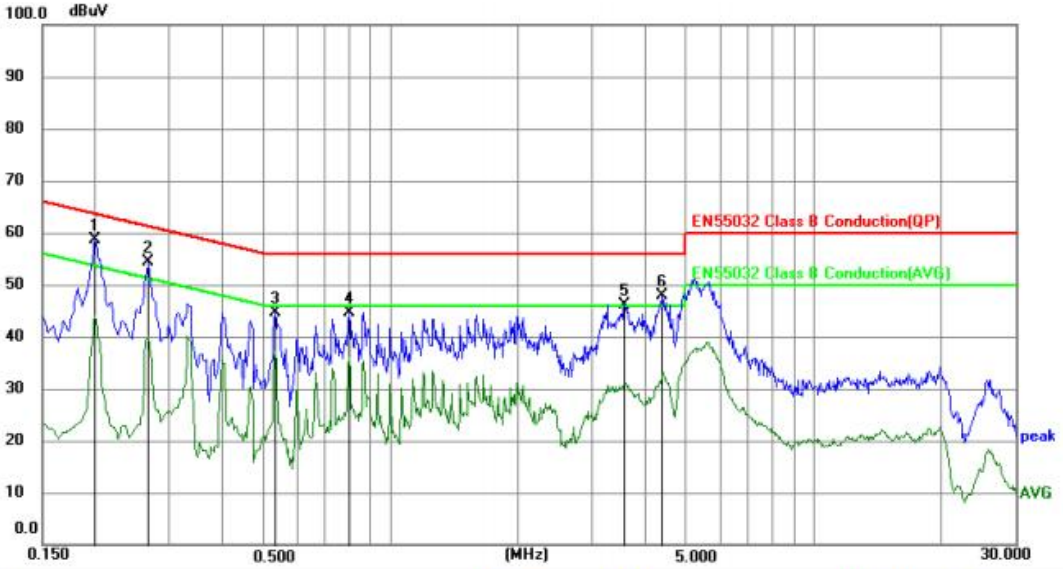

Site LAB Phase: N Temperature: (C)

Limit: EN55032 Class B Conduction(QP) Power: Humidity: %RH

No.	Mk.	Freq.	Reading Level	Correct Factor	Measure-ment	Limit	Over		
		MHz		dB	dBuV	dBuV	dB	Detector	Comment
1	*	0.1995	48.54	10.21	58.75	63.63	-4.88	peak	
2		0.2670	44.21	10.23	54.44	61.21	-6.77	peak	
3		0.5322	34.40	10.29	44.69	56.00	-11.31	peak	
4		0.7980	34.33	10.37	44.70	56.00	-11.30	peak	
5		3.5745	35.77	10.48	46.25	56.00	-9.75	peak	
6		4.4024	37.24	10.53	47.77	56.00	-8.23	peak	

7.2. RADIATED EMISSION MEASUREMENT

7.2.1. LIMITS

FREQUENCY (MHz)	dBuV/m (At 3m)	
	Class A	Class B
30 ~ 230	50	40
230 ~ 1000	57	47

NOTE: (1) The lower limit shall apply at the transition frequencies.
(2) Emission level (dBuV/m) = 20 log Emission level (uV/m).

7.2.2. TEST INSTRUMENTS

Radiated Emission Test Site (966)				
Equipment	**Manufacturer**	**Model**	**Serial Number**	**Calibration date**
EMI Test Receiver	Rohde & Schwarz	ESCI7	100920	2026.04.20
low frequency Amplifier	Sonoma Instrument	310	323089	2026.04.20
high-frequency Amplifier	HP	8449B	P180313003	2026.04.20
Composite logarithmic antenna	SCHWARZBECK	VULB 9168	00931	2026.04.20
System-Controller	CCS	N/A	N/A	N/A
Turn Table	CCS	N/A	N/A	N/A
Antenna Tower	CCS	N/A	N/A	N/A
RF Line	Robinson	ZT26-NJ-NJ-0.6 M	18126549	2026.04.20
RF Line	Robinson	ZT26-NJ-SMAJ-2M	18126550	2026.04.20
RF Line	Robinson	ZT26-NJ-SMAJ-0.6M	18126548	2026.04.20
RF Line	Robinson	ZT26-NJ-SMAJ-8.5M	18126547	2026.04.20
Test Software	EZ	EZ-EMC (Ver. FA-03A2)	N/A	N/A

NOTE: 1. The calibration interval of the above test instruments is 12 months and the calibrations are traceable to international system unit (SI).
2. N.C.R = No Calibration Request.

7.2.3. TEST PROCEDURE

Procedure of Preliminary Test

The equipment was set up as per the test configuration to simulate typical usage per the user's manual. When the EUT is a tabletop system, a wooden turntable with a height of 0.8 meters is used which is placed on the ground plane. When the EUT is a floor standing equipment, it is placed on the ground plane which has a 3-12 mm non-conductive covering to insulate the EUT from the ground plane.

Support equipment, if needed, was placed as per EN55032.

All I/O cables were positioned to simulate typical usage as per EN55032.

Mains cables, telephone lines or other connections to auxiliary equipment located outside the test are shall drape to the floor, be fitted with ferrite clamps or ferrite tubes placed on the floor at the point where the cable reaches the floor and then routed to the place where they leave the turntable. No extension cords shall be used to mains receptacle.

The antenna was placed at 3 meter away from the EUT as stated in EN 55032. The antenna connected to the Spectrum Analyzer via a cable and at times a pre-amplifier would be used.

The Analyzer / Receiver quickly scanned from 30MHz to 1000MHz. The EUT test program was started. Emissions were scanned and measured rotating the EUT to 360 degrees and positioning the antenna 1 to 4 meters above the ground plane, in both the vertical and the horizontal polarization, to maximize the emission reading level.

The test mode(s) described in Item 3.1 were scanned during the preliminary test:

After the preliminary scan, we found the test mode described in Item 3.1 producing the highest emission level. The EUT and cable configuration, antenna position, polarization and turntable position of the above highest emission level were recorded for the final test.

Procedure of Final Test

EUT and support equipment were set up on the turntable as per the configuration with highest emission level in the preliminary test.

The Analyzer / Receiver scanned from 30MHz to 1000MHz. Emissions were scanned and measured rotating the EUT to 360 degrees, varying cable placement and positioning the antenna 1 to 4 meters above the ground plane, in both the vertical and the horizontal polarization, to maximize the emission reading level.

Recorded at least the six highest emissions. Emission frequency, amplitude, antenna position, polarization and turntable position were recorded into a computer in which correction factors were used to calculate the emission level and compare reading to the applicable limit and only Q.P. reading is presented.

The test data of the worst-case condition(s) was recorded.

7.2.4. TEST SETUP

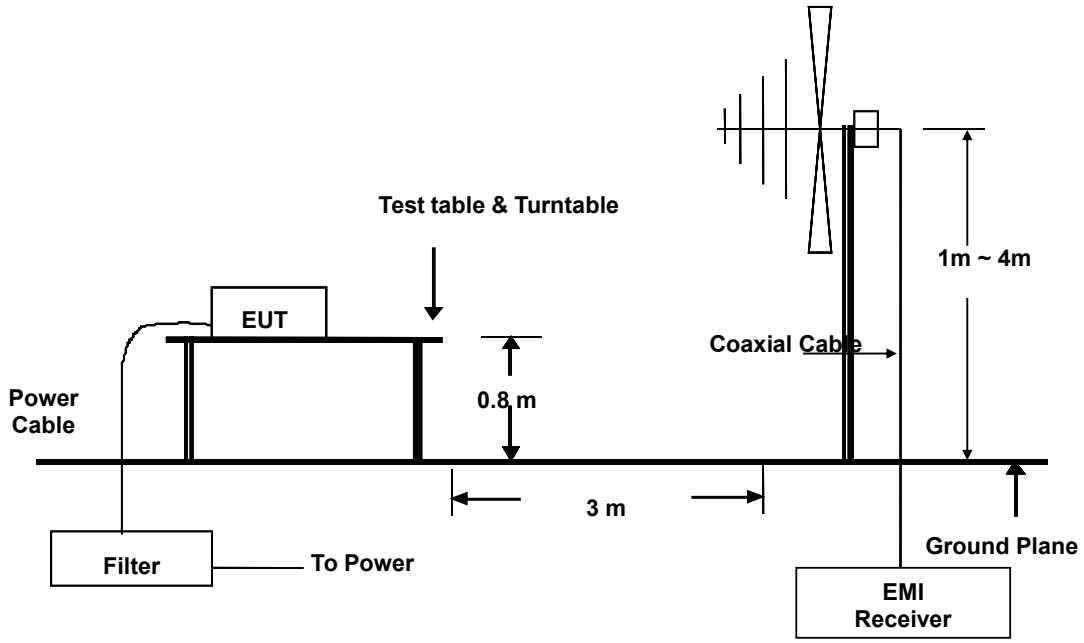

7.2.5 TEST RESULTS

For the actual test configuration, please refer to the related item – Photographs of the Test

Test Mode	Working	**Environmental Conditions**	26°C, 55% RH
6dB Bandwidth	120 KHz	**Antenna Pole**	Vertical / Horizontal
Antenna Distance	3m	**Detector Function**	Peak / Quasi-peak
Tested by	Jeremy Zhang		

Configuration

Freq. = Emission frequency in MHz
Reading level(dBuV) = Receiver reading
Corr. Factor (dB) = Antenna factor + Cable loss
Measurement (dBuV) = Reading level(dBuV) + Corr. Factor (dB)
Limit (dBuV) = Limit stated in standard
Margin (dB) = Measurement (dBuV) – Limits (dBuV)

Radiated Emission Measurement



Site LAB Polarization: *Horizontal* Temperature:

Limit: EN 55032 CLASS B Power: Humidity: %

No.	Mk.	Freq.	Reading Level	Correct Factor	Measure-ment	Limit	Over		Antenna Height	Table Degree	
		MHz	dBuV	dB	dBuV/m	dB/m	dB	Detector	cm	degree	Comment
1		45.3755	30.94	-10.37	20.57	40.00	-19.43	peak			
2		67.4382	36.51	-12.89	23.62	40.00	-16.38	peak			
3		121.1231	37.40	-12.99	24.41	40.00	-15.59	peak			
4		270.3748	39.61	-11.42	28.19	47.00	-18.81	peak			
5		560.6928	28.96	-4.09	24.87	47.00	-22.13	peak			
6	*	929.0081	29.47	2.51	31.98	47.00	-15.02	peak			

Hotline: 400-6655-351 Tel: 0755-23595200 Fax: 0755-23595201 http://www.httprc.com

Radiated Emission Measurement



Site LAB Polarization: *Vertical* Temperature:

Limit: EN 55032 CLASS B Power: Humidity: %

No.	Mk.	Freq.	Reading Level	Correct Factor	Measure-ment	Limit	Over		Antenna Height	Table Degree	
		MHz	dBuV	dB	dBuV/m	dB/m	dB	Detector	cm	degree	Comment
1		30.2110	40.98	-12.18	28.80	40.00	-11.20	peak			
2		47.3255	43.15	-10.79	32.36	40.00	-7.64	peak			
3	*	67.9129	46.82	-12.97	33.85	40.00	-6.15	peak			
4		157.5588	36.81	-10.60	26.21	40.00	-13.79	peak			
5		446.4141	30.99	-6.37	24.62	47.00	-22.38	peak			
6		972.3374	28.28	3.55	31.83	47.00	-15.17	peak			

Hotline: 400-6655-351 Tel: 0755-23595200 Fax: 0755-23595201 http://www.httprc.com

7.3. HARMONICS CURRENT MEASUREMENT

7.3.1. LIMITS OF HARMONICS CURRENT MEASUREMENT

Limits for Class A equipment	
Harmonics Order n	Max. permissible harmonics current A
Odd harmonics	
3	2.30
5	1.14
7	0.77
9	0.40
11	0.33
13	0.21
15<=n<=39	0.15x15/n
Even harmonics	
2	1.08
4	0.43
6	0.30
8<=n<=40	0.23x8/n

Limits for Class D equipment		
Harmonics Order n	Max. permissible harmonics current per watt mA/W	Max. permissible harmonics current A
Odd Harmonics only		
3	3.4	0.23
5	1.9	1.14
7	1.0	0.77
9	0.5	0.40
11	0.35	0.33
13	0.30	0.21
15<=n<=39	3.85/n	0.15x15/n

NOTE: 1. Class A and Class D are classified according to item 4.4.3.

2. According to section 7 of EN IEC 61000-3-2, the above limits apply for all equipments with a rated power more than 75W, except for lighting equipment.

7.3.2. TEST INSTRUMENTS

Equipment	Manufacturer	Model	Serial Number	Calibration date
Electric Power Analyzer	EVERFINE	PF6000	P619086TF1411112	2026.04.20
Harmonics&Flicker Testing Power Source	EVERFINE	HFS-1000	P624484TM1411115	2026.04.20
Software	EVERFINE	HFMSuite_V2.00.105	N/A	N/A

NOTE: 1. The calibration interval of the above test instruments is 12 months and the calibrations are traceable to international system unit (SI).

7.3.3. TEST PROCEDURE

The EUT was placed on the top of a wooden table 0.8 meters above the ground and operated to produce the maximum harmonic components under Standard Mode operating conditions for each successive harmonic component in turn.

The classification of EUT is according to section 5 of EN IEC 61000-3-2.

The EUT is classified as follows:

Class A: Balanced three-phase equipment, Household appliances excluding equipment as Class D, Tools excluding portable tools, Dimmers for incandescent lamps, audio equipment, equipment not specified in one of the three other classes.

Class B: Portable tools; Arc welding equipment which is not professional equipment.

Class C: Lighting equipment.

Class D: Equipment having a specified power less than or equal to 600 W of the following types: Personal computers and personal computer monitors and television receivers.

The correspondent test program of test instrument to measure the current harmonics emanated from EUT is chosen. The measure time shall be not less than the time necessary for the EUT to be exercised.

7.3.4. TEST SETUP

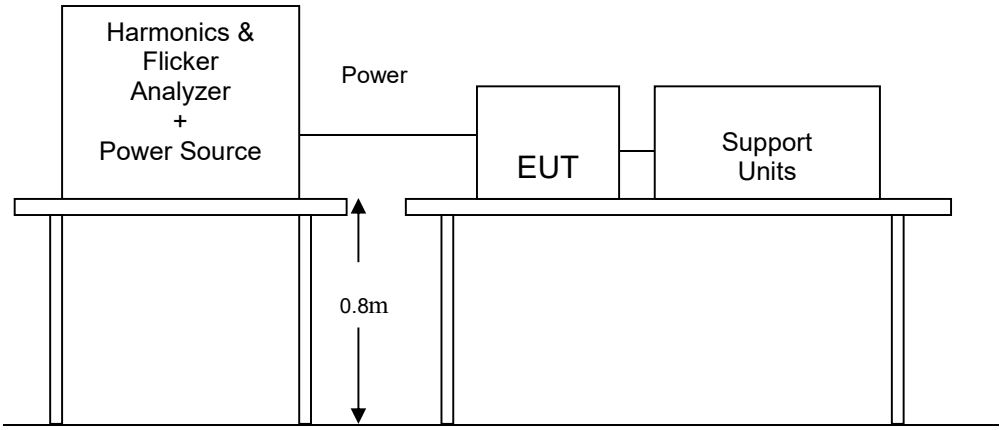

For the actual test configuration, please refer to the related item .

7.3.5. TEST RESULTS

POWER CONSUMPTION	Rated power exceeding 75W	**Test Mode**	Working
ENVIRONMENTAL CONDITIONS	24.5deg.C, 56% RH, 992 hPa	**Limits**	Class ☒ A ☐ B ☐ C ☐ D
Test Result	Pass	**Tested by**	Jeremy Zhang

NOTE: 1. Limits classified according to item 7.3.1.

2. There is no need for Harmonics test to be performed on this product(rated power is less than 75W) in accordance with EN IEC 61000-3-2.

For further details, please refer to Clause 7 of EN IEC 61000-3-2 which states:

“For the following categories of equipment, limits are not specified in this edition of the standard: equipment with a rated power of 75W or less, other than lighting equipment.”

7.4. VOLTAGE FLUCTUATION AND FLICKS MEASUREMENT

7.4.1. LIMITS OF VOLTAGE FLUCTUATION AND FLICKS MEASUREMENT

TEST ITEM	LIMIT	REMARK
P_{st}	1.0	P_{st} means short-term flicker indicator.
P_{lt}	0.65	P_{lt} means long-term flicker indicator.
T_{dt} (ms)	500	T_{dt} means maximum time that dt exceeds 3 %.
d_{max} (%)	4%	d_{max} means maximum relative voltage change.
dc (%)	3.3%	dc means relative steady-state voltage change

7.4.2. TEST INSTRUMENTS

Equipment	Manufacturer	Model	Serial Number	Calibration date
Electric Power Analyzer	EVERFINE	PF6000	P619086TF1411112	2026.04.20
Harmonics&Flicker Testing Power Source	EVERFINE	HFS-1000	P624484TM1411115	2026.04.20
Software	EVERFINE	HFMSuite_V2.00.105	N/A	N/A

NOTE: The calibration interval of the above test instruments is 12 months and the calibrations are traceable to international system unit (SI).

7.4.3. TEST PROCEDURE

The EUT was placed on the top of a wooden table 0.8 meters above the ground and operated to produce the most unfavorable sequence of voltage changes under Standard Mode operating conditions.

During the flick measurement, the measure time shall include that part of whole operation cycle in which the EUT produce the most unfavorable sequence of voltage changes. The observation period for short-term flicker indicator is 10 minutes and the observation period for long-term flicker indicator is 2 hours.

7.4.4. TEST SETUP

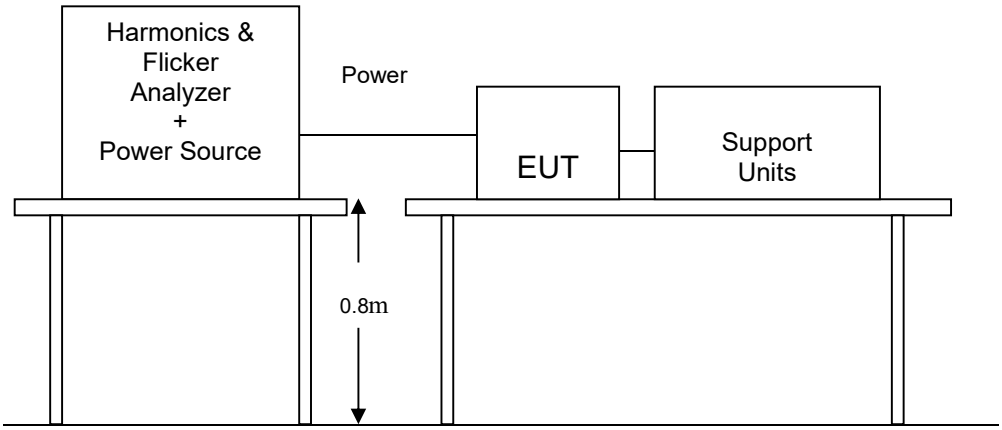

For the actual test configuration, please refer to the related item .

7.4.5. TEST RESULTS

OBSERVATION PERIOD (Tp)	10mins	**Test Mode**	Working
ENVIRONMENTAL CONDITIONS	24.5deg.C, 56% RH, 992 hPa	**Tested by:**	Jeremy Zhang
Test Result	Pass		

8 IMMUNITY TEST

8.1. GENERAL DESCRIPTION

Product Standard	EN 55035:2017+A11:2020	
	Test Type	Minimum Requirement
Basic Standard, Specification, and Performance Criterion required	EN 61000-4-2	Electrostatic Discharge – ESD: 8kV air discharge, 4kV Contact discharge, Performance Criterion B
	EN 61000-4-3	Radio-Frequency Electromagnetic Field Susceptibility Test – RS: 80 ~1000 MHz, 1800 MHz, 2600 MHz, 3500 MHz, 5000 MHz, 3V/m, 80% AM(1kHz), Performance Criterion A
	EN 61000-4-4	Electrical Fast Transient/Burst - EFT, Power line: 1kV, Direct For signal port Direct For dc input port: 0.5kV Performance Criterion B
	EN 61000-4-5	Surge Immunity Test: Test level for AC mains ports, Line to line: 1kV(1.2/50(8/20)us), Line to ground: 2kV(1.2/50(8/20)us); Analogue/digital data port, Port type: coaxial or shielded: Shield to ground: 0.5 kV (1.2/50(8/20)us); DC network power port: Line to reference ground: 0.5 kV(1.2/50(8/20)us); Performance Criterion B. Analogue/digital data port, Port type: unshielded symmetrical Lines to ground : 1kV and 4kV(10/700(5/320)us (with the primary protection)); Performance Criterion C.
	EN 61000-4-6	Conducted Radio Frequency Disturbances Test –CS: 0.15 ~ 80 MHz, 3Vrms, 80% AM, 1kHz, Performance Criterion A
	EN 61000-4-8	Power frequency magnetic field immunity test 50 Hz, 1A/m Performance Criterion A
	EN IEC 61000-4-11	Voltage Dips: i) >95% reduction for 0.5 period, Performance Criterion B ii) 30% reduction for 25 period, Performance Criterion C Voltage Interruptions: >95% reduction for 250 period Performance Criterion C

Hotline: 400-6655-351 Tel: 0755-23595200 Fax: 0755-23595201 http://www.httprc.com

8.2. GENERAL PERFORMANCE CRITERIA DESCRIPTION

Criteria A:	The apparatus shell continues to operate as intended without operator intervention. No degradation of performance or loss of function is allowed below a performance level specified by the manufacturer, when the apparatus is used as intended. The performance level may be replaced by a permissible loss of performance. If the manufacturer does not specify the minimum performance level or the permissible performance loss, then either of these may be derived from the product description and documentation, and by what the user may reasonably expect from the equipment if used as intended.
Criteria B:	After test, the apparatus shell continues to operate as intended without operator intervention. No degradation of performance or loss of function is allowed, after the application of the phenomenon below a performance level specified by the manufacturer, when the apparatus is used as intended. The performance level may be replaced by a permissible loss of performance. During the test, degradation of performance is however allowed. However, no change of operating state if stored data is allowed to persist after the test. If the manufacturer does not specify the minimum performance level or the permissible performance loss, then either of these may be derived from the product description and documentation, and by what the user may reasonably expect from the equipment if used as intended.
Criteria C:	Temporary loss of function is allowed, provided the functions is self-recoverable or can be restored by the operation of controls by the user in accordance with the manufacturer instructions. Functions, and/or information stored in non-volatile memory, or protected by a battery backup, shall not be lost.

8.3. ELECTROSTATIC DISCHARGE (ESD)

8.3.1. TEST SPECIFICATION

Basic Standard:	EN 61000-4-2
Discharge Impedance:	330 ohm
Charging Capacity:	150pF
Discharge Voltage:	Air Discharge: 8 kV (Direct) Contact Discharge: 4 kV (Direct/Indirect)
Polarity:	Positive & Negative
Number of Discharge:	Minimum 25 times at each test point
Discharge Mode:	1 time/s
Performance Criterion:	B

8.3.2. TEST INSTRUMENT

IMMUNITY SHIELDED ROOM				
Equipment	**Manufacturer**	**Model**	**Serial Number**	**Calibration date**
ESD Tester	LIONCEL	ESD-202A	0180801	2026.04.20
ESD Gun	LIONCEL	N/A	N/A	2026.04.20

NOTE: The calibration interval of the above test instruments is 12 months and the calibrations are traceable to international system unit (SI).

8.3.3. TEST PROCEDURE

The discharges shall be applied in two ways:

a) Contact discharges to the conductive surfaces and coupling planes:
The EUT shall be exposed to at least 200 discharges, 100 each at negative and positive polarity, at a minimum of four test points. One of the test points shall be subjected to at least 50 indirect discharges to the center of the front edge of the **H**orizontal **C**oupling **P**lane (**HCP**). The remaining three test points shall each receive at least 50 direct contact discharges. If no direct contact test points are available, then at least 200 indirect discharges shall be applied in the indirect mode. Test shall be performed at a maximum repetition rate of one discharge per second.

b) Air discharges at slots and apertures and insulating surfaces:
On those parts of the EUT where it is not possible to perform contact discharge testing, the equipment should be investigated to identify user accessible points where breakdown may occur. Such points are tested using the air discharge method. This investigation should be restricted to those area Running PC Systemly handled by the user. A minimum of 10 single air discharges shall be applied to the selected test point for each such area.

The basic test procedure was in accordance with IEC 61000-4-2:

a) The EUT was located 0.1 m minimum from all side of the **HCP** (dimensions 1.6m x 0.8m).
b) The support units were located another table 30 cm away from the EUT, but direct support unit was/were located at same location as EUT on the HCP and keep at a distance of 10 cm with EUT.
c) The time interval between two successive single discharges was at least 1 second.
d) Contact discharges were applied to the non-insulating coating, with the pointed tip of the generator penetrating the coating and contacting the conducting substrate.
e) Air discharges were applied with the round discharge tip of the discharge electrode approaching the EUT as fast as possible (without causing mechanical damage) to touch the EUT. After each discharge, the ESD generator was removed from the EUT and re-triggered for a new single discharge. The test was repeated until all discharges were complete.
f) At least ten single discharges (in the most sensitive polarity) were applied at the front edge of each **HCP** opposite the center point of each unit of the EUT and 0.1 meters from the front of the EUT. The long axis of the discharge electrode was in the plane of the **HCP** and perpendicular to its front edge during the discharge.
g) At least ten single discharges (in the most sensitive polarity) were applied to the center of one vertical edge of the **V**ertical **C**oupling **P**lane (**VCP**) in sufficiently different positions that the four faces of the EUT were completely illuminated. The **VCP** (dimensions 0.5m x 0.5m) was placed vertically to and 0.1 meters from the EUT.

8.3.4. TEST SETUP

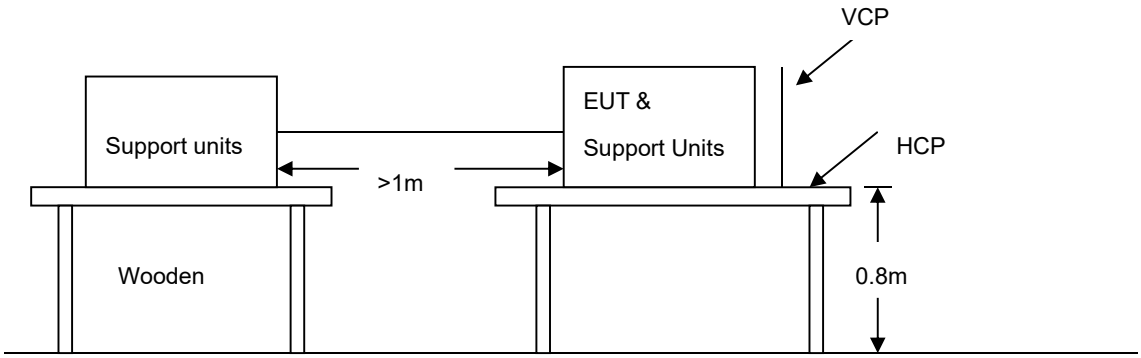

Ground Reference

For the actual test configuration, please refer to the related item – Photographs of the Test Configuration.

NOTE:

TABLE-TOP EQUIPMENT

The configuration consisted of a wooden table 0.8 meters high standing on the **G**round **R**eference **P**lane. The **GRP** consisted of a sheet of aluminum at least 0.25mm thick, and 2.5 meters square connected to the protective grounding system. A **H**orizontal **C**oupling **P**lane (1.6m x 0.8m) was placed on the table and attached to the **GRP** by means of a cable with 940k total impedance. The equipment under test, was installed in a representative system as described in section 7 of EN 61000-4-2, and its cables were placed on the **HCP** and isolated by an insulating support of 0.5mm thickness. A distance of 1-meter minimum was provided between the EUT and the walls of the laboratory and any other metallic structure.

FLOOR-STANDING EQUIPMENT

The equipment under test was installed in a representative system as described in section 7 of IEC 61000-4-2, and its cables were isolated from the Ground Reference Plane by an insulating support of 0.1-meter thickness. The GRP consisted of a sheet of aluminum that is at least 0.25mm thick, and 2.5 meters square connected to the protective grounding system and extended at least 0.5 meters from the EUT on all sides.

8.3.5. TEST RESULTS

Temperature:	25°C	Humidity	50% RH
Pressure	996mbar	Test result	Pass
Test mode	Working	Test By	Jeremy Zhang

Air Discharge						
Test locations		Test Levels	Results			
		± 8 kV	Pass	Fail	Performance Criterion	Observation
Slot	8Points	☒	☒	☐	B	Note ☐1 ☒2

Contact Discharge						
Test Points		Test Levels	Results			
		± 4 kV	Pass	Fail	Performance Criterion	Observation
HCP	4Points	☒	☒	☐	B	Note ☐1 ☒2
VCP	4Points	☒	☒	☐	B	Note ☐1 ☒2
Port	4Points	☒	☒	☐	B	Note ☐1 ☒2
Metal	4Points	☒	☒	☐	B	Note ☐1 ☒2

NOTE: 1. There was no change compared with initial operation during the test.
2. The loss of function of the EUT during the test and it was recovered by itself operation after the test.

8.4. RADIATED, RADIO-FREQUENCY, ELECTROMAGNETIC FIELD (RS)

8.4.1. TEST SPECIFICATION

Basic Standard:	EN 61000-4-3
Frequency Range:	80 MHz ~1000 MHz, 1800 MHz, 2600 MHz, 3500 MHz, 5000 MHz
Field Strength:	3 V/m
Modulation:	1kHz Sine Wave, 80%, AM Modulation
Frequency Step:	1 % of preceding frequency value
Polarity of Antenna:	Horizontal and Vertical
Test Distance:	3 m
Antenna Height:	1.5m
Performance Criterion:	A

8.4.2. TEST INSTRUMENT

743 RS Chamber				
Name of Equipment	**Manufacturer**	**Model**	**Serial Number**	**Calibration date**
Signal Generator	Maconi	2022D	119246/003	2026.04.20
Power Amplifier	M2S	A00181-1000	9801-112	2026.04.20
Power Amplifier	M2S	AC8113/ 800-250A	9801-179	2026.04.20
Power Antenna	SCHAFFNER	CBL6140A	1204	2026.04.20

NOTE: 1. The calibration interval of the above test instruments is 12 months and the calibrations are traceable to international system unit (SI).
2. N.C.R.= No Calibration required

8.4.3. TEST PROCEDURE

The test procedure was in accordance with EN 61000-4-3

a) The testing was performed in a fully anechoic chamber. The transmit antenna was located at a distance of 3 meters from the EUT.

b) The frequency range is swept from 80 MHz to 1000 MHz, with the signal 80% amplitude modulated with a 1kHz sine-wave. The rate of sweep did not exceed 1.5×10^{-3} decade/s, where the frequency range is swept incrementally, the step size was 1% of preceding frequency value.

c) The dwell time at each frequency shall be not less than the time necessary for the EUT to be able to respond.

d) The test was performed with the EUT exposed to both vertically and horizontally polarized fields on each of the four sides.

8.4.4. TEST SETUP

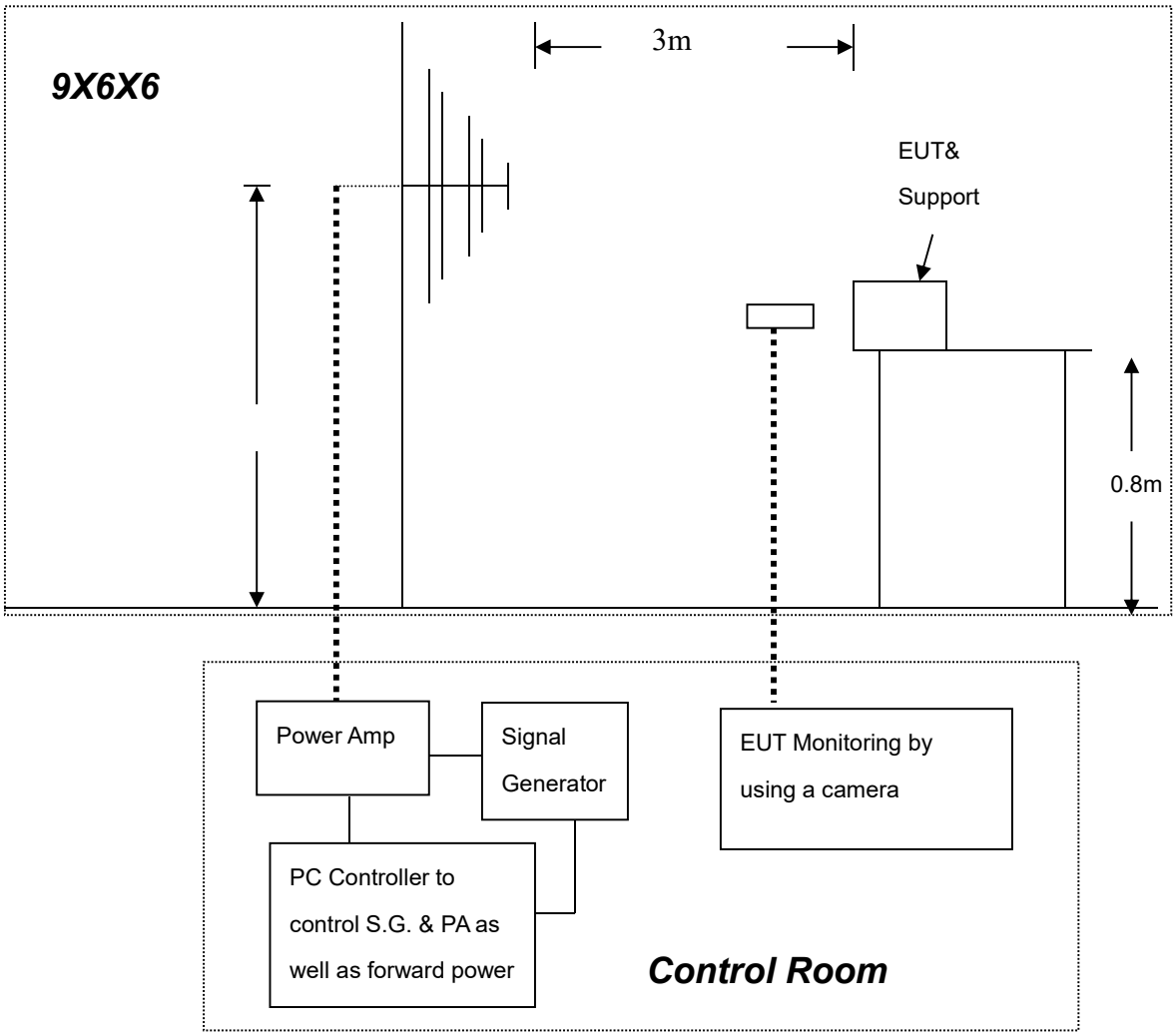

For the actual test configuration, please refer to the related item .

NOTE:

TABLETOP EQUIPMENT

The EUT installed in a representative system as described in section 7 of EN 61000-4-3 was placed on a non-conductive table 0.8 meters in height. The system under test was connected to the power and signal wire according to relevant installation instructions.

FLOOR STANDING EQUIPMENT

The EUT installed in a representative system as described in section 7 of IEC 61000-4-3 was placed on a non-conductive wood support 0.1 meters in height. The system under test was connected to the power and signal wire according to relevant installation instructions.

8.4.5. TEST RESULTS

Temperature:	25°C	Humidity	50% RH
Pressure	996mbar	Test result	Pass
Test mode	Working	Test By	Jeremy Zhang

Frequency (MHz)	Polarity	Postion	Field Strength (V/m)	Observation	Result
80 ~ 1000	V&H	Front	3	Note	Pass
80 ~ 1000	V&H	Rear	3	Note	Pass
80 ~ 1000	V&H	Left	3	Note	Pass
80 ~ 1000	V&H	Right	3	Note	Pass
1800, 2600, 3500, 5000	V&H	Front	3	Note	Pass
	V&H	Rear	3	Note	Pass
	V&H	Left	3	Note	Pass
	V&H	Right	3	Note	Pass

NOTE: 1.There was no change compared with the initial operation during the test.

8.5. ELECTRICAL FAST TRANSIENT (EFT)

8.5.1. TEST SPECIFICATION

Basic Standard:	EN 61000-4-4
Test Voltage:	Power Line: 1 kV Signal/Control Line: 0.5 kV
Polarity:	Positive & Negative
Impulse Frequency:	5 kHz
Impulse Wave-shape:	5/50 ns
Burst Duration:	15 ms
Burst Period:	300 ms
Test Duration:	Not less than 1 min.
Performance criterion:	B

8.5.2. TEST INSTRUMENT

Immunity Shield Room				
Equipment	**Manufacturer**	**Model**	**Serial Number**	**Calibration date**
EFT Tester	LIONCEL	LSE-545CB	0180601	2026.04.20
Specialized Isolated Voltage Regulator For Surge	EVERFINE	GT2502	P185365CM5391123	2026.04.20
Coupling Clamp	LIONCEL	EFTC	018071809	2026.04.20

NOTE: 1. The calibration interval of the above test instruments is 12 months and the calibrations are traceable to international system unit (SI).

2. N.C.R.= No Calibration required

8.5.3. TEST PROCEDURE

a) Both positive and negative polarity discharges were applied.

b) The length of the “hot wire” from the coaxial output of the EFT generator to the terminals on the EUT should not exceed 1 meter.

c) The duration time of each test sequential was 1 minute.

d) The transient/burst waveform was in accordance with EN 61000-4-4, 5/50ns.

8.5.4. TEST SETUP

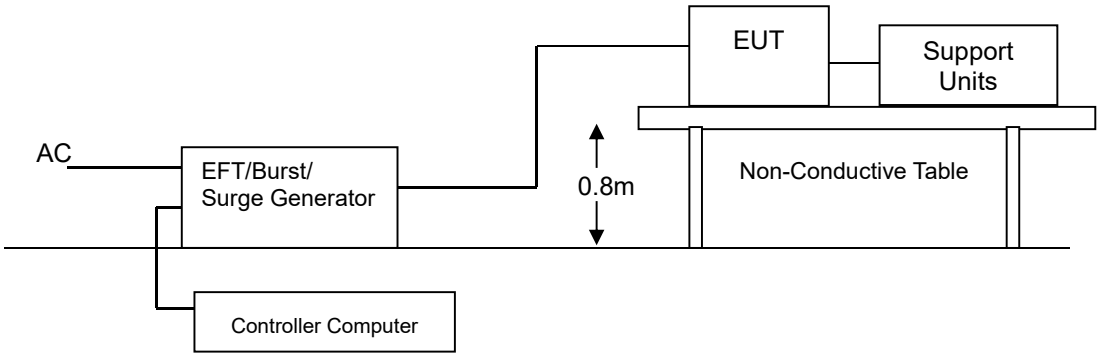

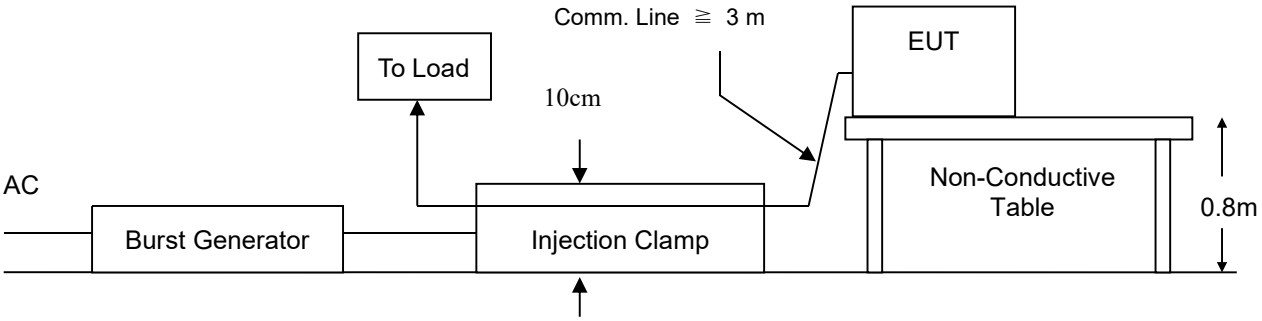

For the actual test configuration, please refer to the related item – Photographs of the Test Configuration.

NOTE:

TABLETOP EQUIPMENT

The configuration consisted of a wooden table (0.8m high) standing on the Ground Reference Plane. The GRP consisted of a sheet of aluminum (at least 0.25mm thick and 2.5m square) connected to the protective grounding system. A minimum distance of 0.5m was provided between the EUT and the walls of the laboratory or any other metallic structure.

FLOOR STANDING EQUIPMENT

The EUT installed in a representative system as described in section 7 of IEC 61000-4-4 and its cables, were isolated from the Ground Reference Plane by an insulating support that is 0.1-meter thick. The GRP consisted of a sheet of aluminum (at least 0.25mm thick and 2.5m square) connected to the protective grounding system.

8.5.5. TEST RESULTS

Temperature:	25°C	**Humidity**	50% RH
Pressure	996mbar	**Test result**	Pass
Test mode	Working	**Test By**	Jeremy Zhang

Test Point	Polarity	Test Level (kV)	Performance Criterion	Observation	Result
L	+/-	1	B	Note ☐1 ☒2	Pass
N	+/-	1	B	Note ☐1 ☒2	Pass
L – N	+/-	1	B	Note ☐1 ☒2	Pass
PE	+/-	1	B	Note ☐1 ☒2	Pass
L – PE	+/-	1	B	Note ☐1 ☒2	Pass
N – PE	+/-	1	B	Note ☐1 ☒2	Pass
L – N – PE	+/-	1	B	Note ☐1 ☒2	Pass
Signal Line	--	--	--	Note ☐1 ☐2	N/A

NOTE: 1. There was no change compared with initial operation during the test.
2. The loss of function of the EUT during the test and it was recovered by itself operation after the test.

8.6. SURGE IMMUNITY TEST

8.6.1. TEST SPECIFICATION

Basic Standard:	EN 61000-4-5
Wave-Shape:	Combination Wave 1.2/50 us Open Circuit Voltage 8/20 us Short Circuit Current
Test Voltage:	Power line ~ line to line: 1 kV; line to ground: 2kV Telecommunication line: 1 kV;
Surge Input/Output:	Power Line: L-N / L-PE / N-PE Telecommunication line: T-Ground / R-Ground
Generator Source Impedance:	2 ohm between networks 12 ohm between network and ground
Polarity:	Positive/Negative
Phase Angle:	0 /90 /180 /270
Pulse Repetition Rate:	1 time / min. (maximum)
Number of Tests:	5 positive and 5 negative at selected points
Performance Criterion:	B

8.6.2. TEST INSTRUMENT

Immunity Shield Room				
Equipment	**Manufacturer**	**Model**	**Serial Number**	**Calibration date**
Surge Tester	LIONCEL	LSE-545CB	0180601	2026.04.20
Specialized Isolated Voltage Regulator For Surge	EVERFINE	GT2502	P185365CM5391123	2026.04.20

NOTE: 1. The calibration interval of the above test instruments is 12 months and the calibrations are traceable to international system unit (SI).
2. N.C.R.= No Calibration required

8.6.3. TEST PROCEDURE

a) For EUT power supply:

The surge is applied to the EUT power supply terminals via the capacitive coupling network. Decoupling networks are required in order to avoid possible adverse effects on equipment not under test that may be powered by the same lines, and to provide sufficient decoupling impedance to the surge wave. The power cord between the EUT and the coupling/decoupling networks was shorter than 2 meters in length.

b) For test applied to unshielded un-symmetrically operated interconnection lines of EUT:

The surge was applied to the lines via the capacitive coupling. The coupling / decoupling networks didn't influence the specified functional conditions of the EUT. The interconnection line between the EUT and the coupling/decoupling networks was shorter than 2 meters in length.

c) For test applied to unshielded symmetrically operated interconnection / telecommunication lines of EUT:

The surge was applied to the lines via gas arrestors coupling. Test levels below the ignition point of the coupling arrestor were not specified. The interconnection line between the EUT and the coupling/decoupling networks was shorter than 2 meters in length.

8.6.4. TEST SETUP

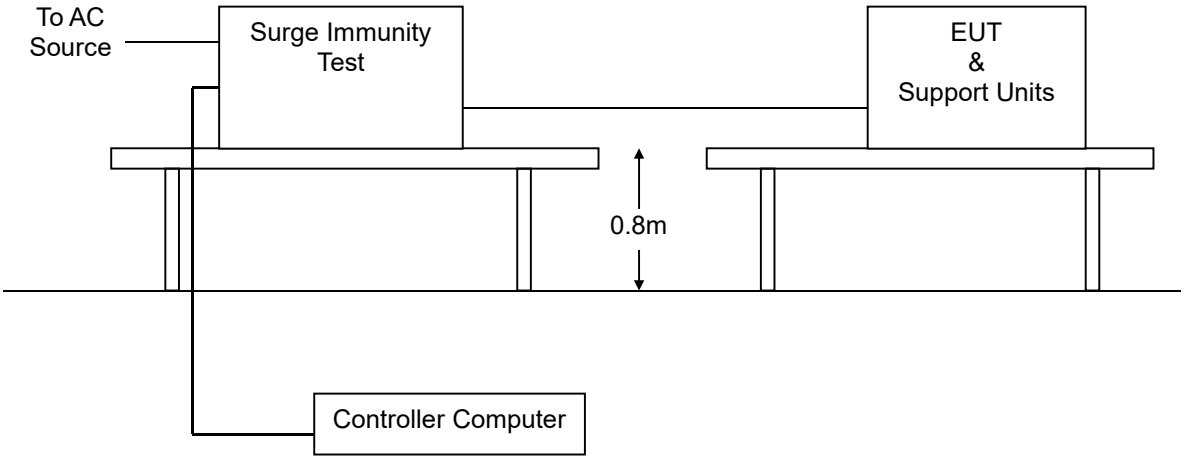

For the actual test configuration, please refer to the related item – Photographs of the Test Configuration.

8.6.5. TEST RESULTS

Temperature:	25°C	**Humidity**	50% RH
Pressure	996mbar	**Test result**	Pass
Test mode	Working	**Test By**	Jeremy Zhang

Test Point	Polarity	Test Level (kV)	Performance Criterion	Observation	Result
L - N	+/-	1	B	Note ☐1 ☒2	Pass
L - PE	+/-	2	B	Note ☐1 ☒2	Pass
N - PE	+/-	2	B	Note ☐1 ☒2	Pass

NOTE: 1. There was no change compared with initial operation during the test.
2. The loss of function of the EUT during the test and it was recovered by itself operation after the test.

8.7. CONDUCTED RADIO FREQUENCY DISTURBANCES (CS)

8.7.1. TEST SPECIFICATION

Basic Standard:	EN 61000-4-6
Frequency Range:	0.15 MHz ~ 10 MHz; 10 MHz ~ 30 MHz; 30 MHz ~ 80 MHz;
Field Strength:	3 V, 3V~1V, 1V
Modulation:	1kHz Sine Wave, 80%, AM Modulation
Frequency Step:	1 % of preceding frequency value
Coupled cable:	Power Mains, Shielded
Coupling device:	CDN-M3/2 (2 wires)
Performance criterion:	A

8.7.2. TEST INSTRUMENT

CS Test				
Name of Equipment	**Manufacturer**	**Model**	**Serial Number**	**Calibration date**
Signal Generator	Maconi	2022D	119246/003	2026.04.20
Power Amplifier	M2S	A00181-1000	9801-112	2026.04.20
CDN	MEB	M3-8016	003683	2026.04.20

NOTE: 1. The calibration interval of the above test instruments is 12 months and the calibrations are traceable to international system unit (SI).
2. N.C.R.= No Calibration required

8.7.3. TEST PROCEDURE

The EUT shall be tested within its intended operating and climatic conditions.

The test shell performed with the test generator connected to each of the coupling and decoupling devices in turn, while the other non-excited RF input ports of the coupling devices are terminated by a 50-ohm load resistor.

The frequency range was swept from 150 kHz to 80 MHz, using the signal level established during the setting process and with a disturbance signal of 80 % amplitude. The signal was modulated with a 1 kHz sine wave, pausing to adjust the RF signal level or the switch coupling devices as necessary. The sweep rate was 1.5 x 10^{-3} decades/s. Where the frequency range is swept incrementally, the step size was 1 % of preceding frequency value from 150 kHz to 80 MHz.

The dwell time at each frequency was less than the time necessary for the EUT to be exercised, and able to respond. Sensitive frequencies such as clock frequency(ies) and harmonics or frequencies of dominant interest, was analyzed separately.

Attempts was made to fully exercise the EUT during testing, and to fully interrogate all exercise modes selected for susceptibility.

8.7.4. TEST SETUP

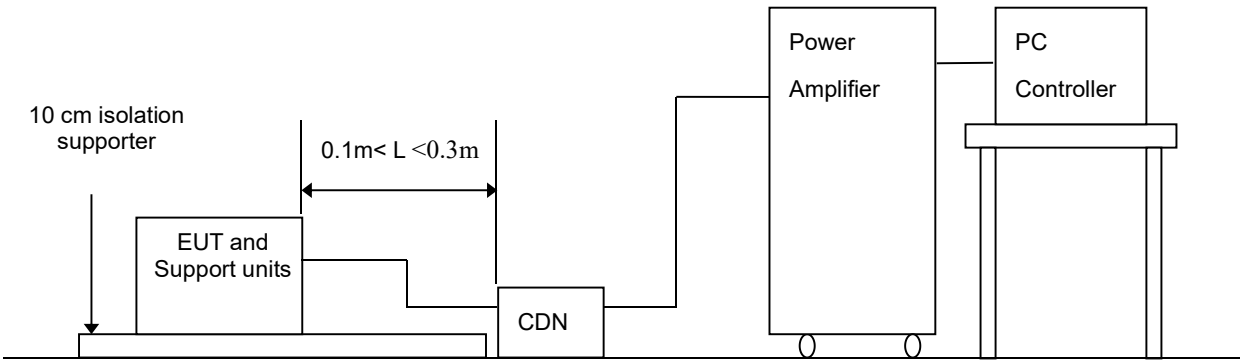

Note: 1. The EUT is setup 0.1m above Ground Reference Plane
2. The CDNS and / or EM clamp used for real test depends on ports and cables configuration of EUT.

For the actual test configuration, please refer to the related item .

NOTE:

TABLE-TOP AND FLOOR-STANDING EQUIPMENT

The equipment to be tested is placed on an insulating support of 0.1 meters height above a ground reference plane. All relevant cables shall be provided with the appropriate coupling and decoupling devices at a distance between 0.1 meters and 0.3 meters from the projected geometry of the EUT on the ground reference plane.

8.7.5. TEST RESULTS

Temperature:	25°C	Humidity	50% RH
Pressure	996mbar	Test result	Pass
Test mode	Working	Test By	Jeremy Zhang

Frequency Band (MHz)	Field Strength (Vrms)	Injected Position	Injection Method	Performance Criterion	Observation	Result
0.15 ~ 10	3	AC Mains	CDN-M2	A	Note ☒1 ☐2	Pass
10 ~ 30	3~1	AC Mains	CDN-M2	A	Note ☒1 ☐2	Pass
30 ~ 80	1	AC Mains	CDN-M2	A	Note ☒1 ☐2	Pass
0.15 ~ 10	3	DC Mains	CDN-M2	A	Note ☒1 ☐2	N/A
10 ~ 30	3~1	DC Mains	CDN-M2	A	Note ☒1 ☐2	N/A
30 ~ 80	1	DC Mains	CDN-M2	A	Note ☒1 ☐2	N/A

NOTE: 1. There was no change compared with initial operation during the test.
2. The loss of function of the EUT during the test and it was recovered by itself operation after the test.
3. N/A means to no applicable.

8.8. POWER FREQUENCY MAGNETIC FIELD

8.8.1. TEST SPECIFICATION

Basic Standard:	EN 61000-4-8
Frequency Range:	50Hz
Field Strength:	1A/m
Observation Time:	5 minutes
Inductance Coil:	Rectangular type, 1mx1m
Performance criterion:	A

8.8.2. TEST INSTRUMENT

Immunity Shield Room				
Name of Equipment	**Manufacturer**	**Model**	**Serial Number**	**Calibration date**
Power-frequency Magnetic field	SCHAFFNER	CCN 1000-1	72046	2026.04.20
Induction Coil Interface	SCHAFFNER	INA2141	6003	2026.04.20

NOTE: 1. The calibration interval of the above test instruments is 12 months and the calibrations are traceable to international system unit (SI).

2. N.C.R.= No Calibration required

8.8.3. TEST PROCEDURE

a. The equipment is configured and connected to satisfy its functional requirements. It shall be placed on the GRP with the interposition of a 0.1m-thick insulating support.

b. The equipment cabinets shall be connected to the safety earth directly on the GRP via the earth terminal of the EUT.

c. The power supply, input and output circuits shall be connected to the sources of power supply, control and signal.

d. The cables supplied or recommended by the equipment manufacturer shall be used. 1 meter of all cables used shall be exposed to the magnetic field.

8.8.4. TEST SETUP

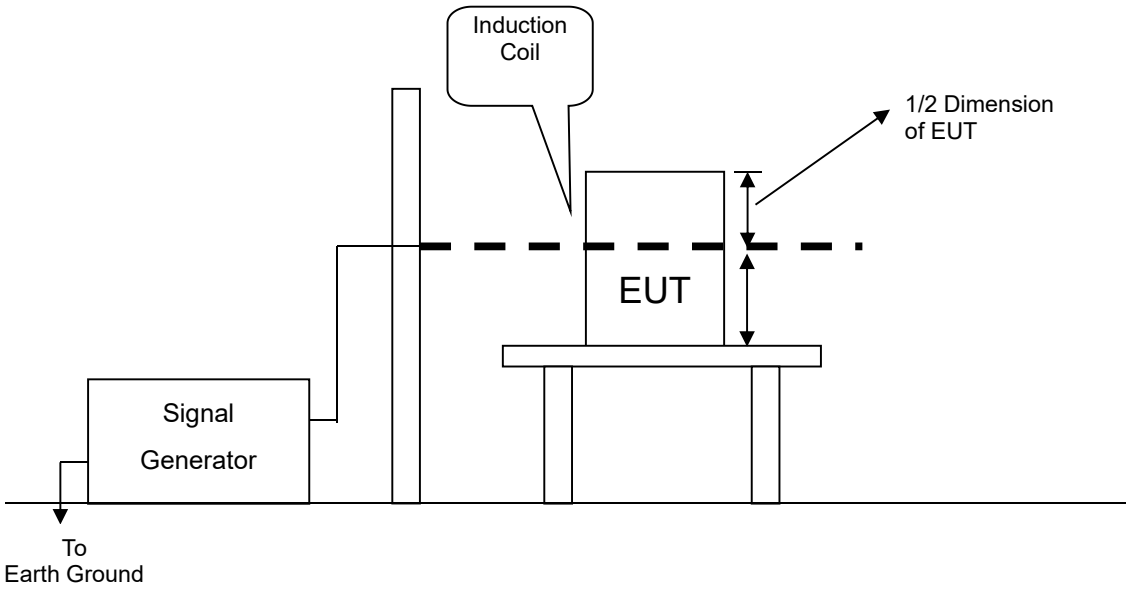

For the actual test configuration, please refer to the related item .

NOTE:

TABLETOP EQUIPMENT

The equipment shall be subjected to the test magnetic field by using the induction coil of standard dimension (1 m x 1 m). The induction coil shall then be rotated by 90 degrees in order to expose the EUT to the test field with different orientations.

FLOOR-STANDING EQUIPMENT

The equipment shall be subjected to the test magnetic field by using induction coils of suitable dimensions. The test shall be repeated by moving and shifting the induction coils, in order to test the whole volume of the EUT for each orthogonal direction. The test shall be repeated with the coil shifted to different positions along the side of the EUT, in steps corresponding to 50 % of the shortest side of the coil. The induction coil shall then be rotated by 90 degrees in order to expose the EUT to the test field with different orientations.

8.8.5. TEST RESULTS

Temperature:	25°C	**Humidity**	50% RH
Pressure	996mbar	**Test result**	Pass
Test mode	Working	**Test By**	Jeremy Zhang

DIRECTION	Field Strength (A/m)	Performance Criterion	OBSERVATION	RESULTS
X	1	A	**Note** ☒**1** ☐**2**	Pass
Y	1	A	**Note** ☒**1** ☐**2**	Pass
Z	1	A	**Note** ☒**1** ☐**2**	Pass

NOTE: 1. There was no change compared with initial operation during the test.
2. The loss of function of the EUT during the test and it was recovered by itself operation after the test.

8.9. VOLTAGE DIP & VOLTAGE INTERRUPTIONS

8.9.1. TEST SPECIFICATION

Basic Standard:	EN IEC 61000-4-11
Test duration time:	Minimum three test events in sequence
Interval between event:	Minimum 10 seconds
Phase Angle:	0 /45 / 90/ 135/ 180/ 225/ 270/ 315/ 360
Test cycle:	3 times
Performance criterion:	B,C

8.9.2. TEST INSTRUMENT

Immunity shielded room				
Equipment	**Manufacturer**	**Model**	**Serial Number**	**Calibration date**
Dips Tester	LIONCEL	VSD-1102	0181202	2026.04.20
Voltage-Stabilized Source	LIONCEL	RGL-220	0180901	2026.04.20
Voltage-Stabilized Source	LIONCEL	RGL-220	0180902	2026.04.20

NOTE: 1. The calibration interval of the above test instruments is 12 months and the calibrations are traceable to international system unit (SI).

2. N.C.R.= No Calibration required

8.9.3. TEST PROCEDURE

1. The EUT and support units were located on a wooden table, 0.8 m away from ground floor.
2. Setting the parameter of tests and then perform the test software of test simulator.
3. Conditions changes to occur at 0 degree crossover point of the voltage waveform.
4. Recording the test result in test record form.

8.9.4. TEST SETUP

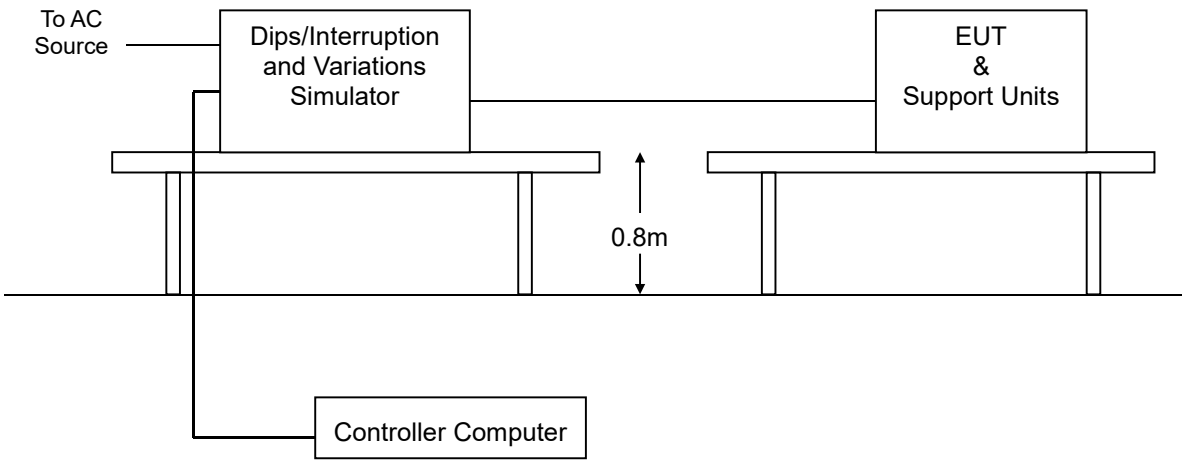

For the actual test configuration, please refer to the related item – Photographs of the Test Configuration.

8.9.5. TEST RESULTS

Temperature:	25ºC	**Humidity**	50% RH
Pressure	996mbar	**Test result**	Pass
Test mode	Working	**Test By**	Jeremy Zhang

Voltage (% Reduction)	Duration (Period)	Performance Criterion	Observation	Test Result
5	0.5	☐A ☒B ☐C	Note ☐1 ☒2 ☐3	Pass
70	25	☐A ☐B ☒C	Note ☐1 ☐2 ☒3	Pass
0	250	☐A ☐B ☒C	Note ☐1 ☐2 ☒3	Pass

NOTE: 1.There was no change compared with initial operation during and after the test.
No unintentional response was found during the test.
2.The function stopped during the test, but can be recoverable by itself operation after the test.
3.The function stopped during the test, but can be recoverable manually after the test.

9 PHOTOGRAPHS OF EUT







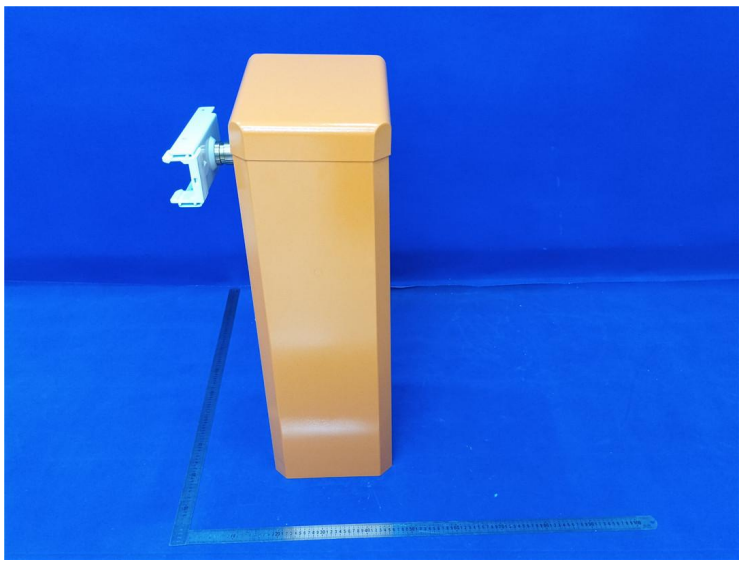



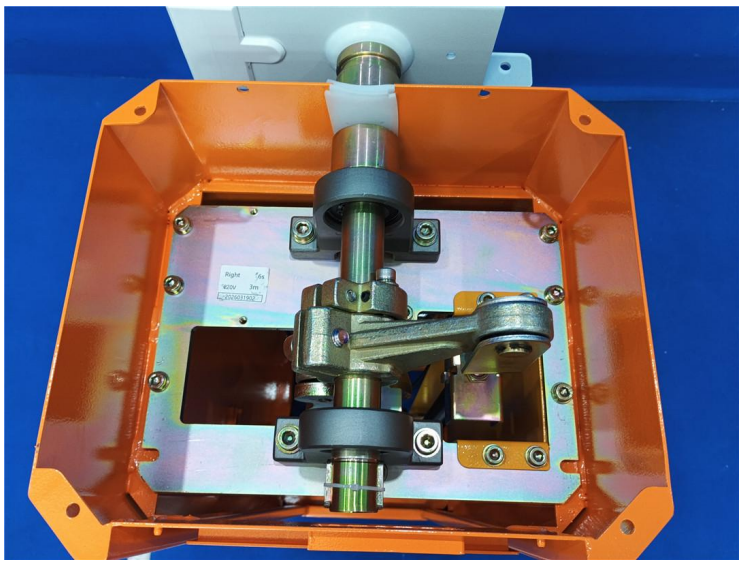







*** End of report ***

Hotline: 400-6655-351 Tel: 0755-23595200 Fax: 0755-23595201 http://www.httprc.com

Project gallery and installation references, kindly visit the webpage below:

https://accesskeyllc.com/projects

THE END