REVISIONS			
REV.	DESCRIPTION	DATE	APPROVED
A	UPDATED CYLINDER INFORMATION	4/4/2013	BEVAN
B	ADDED CHECK VALVE TO CYLINDER	5/6/2013	BEVAN

CYLINDER
2" (51mm) BORE X 6" (152mm) STROKE
PUSH: 9425 LB (41.9 kN)
PULL: 5743 LB (25.5 kN)

WEIGHT = 730 lbs (331 kg)

(HOSES RATED FOR 15,000 PSI BURST PRESSURE)

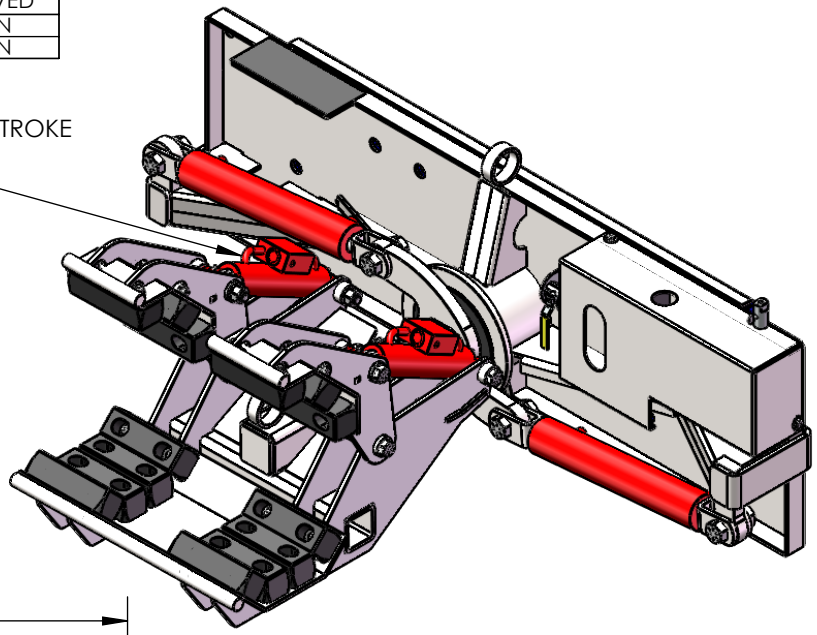

CYLINDER
2.5" (64mm) BORE X 12.5" (318mm) STROKE
PUSH: 14726 LB (65.5 kN)
PULL: 11045 LB (49.3 kN)

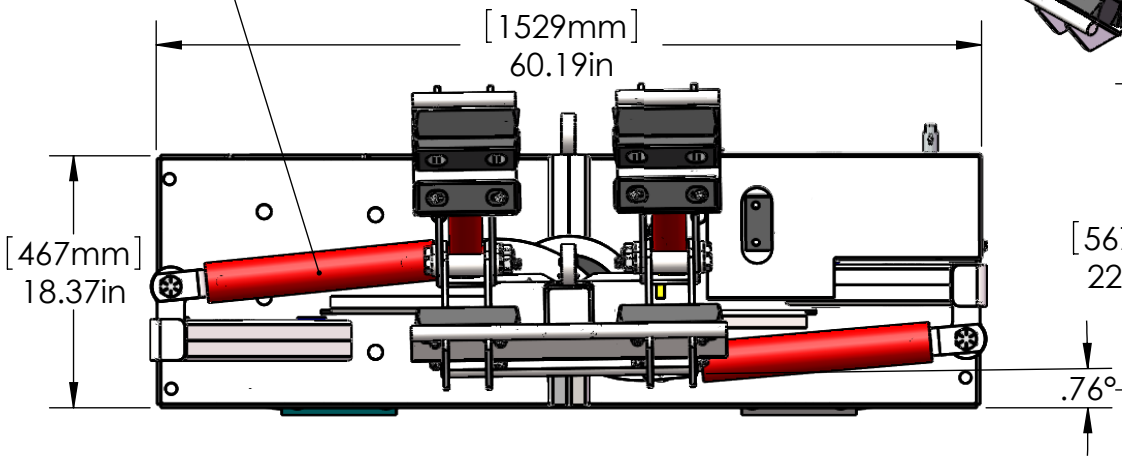

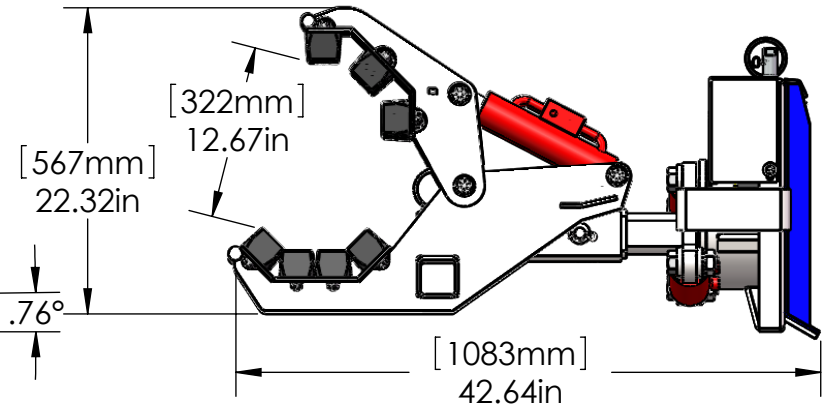

PROPRIETARY AND CONFIDENTIAL

THE INFORMATION CONTAINED IN THIS DRAWING IS THE SOLE PROPERTY OF EZ-SPOT-UR. ANY REPRODUCTION IN PART OR AS A WHOLE WITHOUT THE WRITTEN PERMISSION OF EZ-SPOT-UR IS PROHIBITED.

NEXT ASSY	USED ON
APPLICATION	

UNLESS OTHERWISE SPECIFIED:

DIMENSIONS ARE IN INCHES
TOLERANCES:
FRACTIONAL ±
ANGULAR: MACH ± BEND ±
TWO PLACE DECIMAL ±
THREE PLACE DECIMAL ±

INTERPRET GEOMETRIC TOLERANCING PER:

MATERIAL
N/A

FINISH

DO NOT SCALE DRAWING

	NAME	DATE
DRAWN	TIM R.	4-29-2010
CHECKED		
ENG APPR.		
MFG APPR.		
Q.A.		

COMMENTS:

EZ-SPOT-UR

TITLE:

ASSY, DOUBLE POLE CLAW

SIZE	DWG. NO.	REV
A	2W-01-0004 OPEN	B

SCALE: 1:14 WT: 730 lbs SHEET 1 OF 1

5 4 3 2 1