Kerr Pumps

Kerr KJ-2250

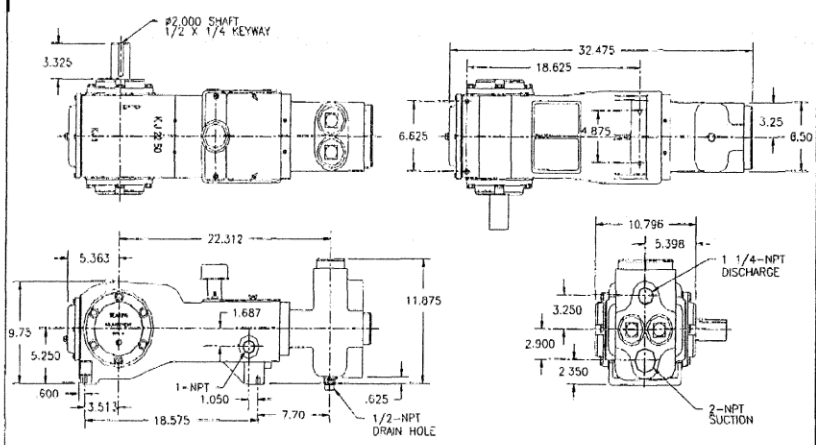

SPECIFICATIONS

No. of Plungers: 2

Stroke Length: 2.500"

Crankshaft:
- Extension Dia. 2"
- Keyway 1/2" x 1/4"

Oil Capacity: 3 Quarts or 2.85 Liters

Pump Weight: 230 Pounds

Connections:
- 2" FNPT (Suction)
- 1 1/4" FNPT(Dischrg)

Std Material for Fluid End:
- Ductile Iron
- Cast Aluminum Bronze
- Cast Carbon Steel
- Forged Steel
- Forged Stainless Steel

Std Material for Plungers:
- Ceramic
- Colmonoy No. 6
- Tungsten No. 88 Col.
- 316 Stainless Steel

Valve Options:
- Delrin
- Titanium
- Stainless Steel
- Abrasive Resistant
- Monel

FEATURES

- Duplex Design
- Heat Treated Crankshaft
- Low Speed Lubrication Option Available
- Forced Feed Lubrication Option Available
- Crankshaft May Extend from Either Side of the Power Frame
- Cast / Heat Treated Connecting Rods with Replaceable Rod Bearings
- Replaceable Stuffing Boxes with Stuffing Box Nuts for Easy Maintenance
- High Speed, High Torque Tapered Roller Bearing (Continuous Duty Cycle)
- Stuffing Boxes and Stuffing Box Nuts are Available in all Fluid End Material Options

PLGR DIA. INCHES	MAX PRESS PSI	DISP GAL PER REV	DISPLACEMENT 100 RPM		150 RPM		200 RPM		250 RPM		300 RPM		350 RPM		400 RPM		450 RPM		500 RPM	
			GPM	BPD	GPM	BPD	GPM	BPD	GPM	BPD	GPM	BPD	GPM	BPD	GPM	BPD	GPM	BPD	GPM	BPD
.875"	2350	0.0130	1.3	45	2.0	67	2.6	89	3.3	112	3.9	134	4.6	156	5.2	178	5.9	201	6.5	223
1.000"	2350	0.0170	1.7	58	2.5	87	3.4	117	4.2	146	5.1	175	5.9	204	6.8	233	7.6	262	8.5	291
1.250"	1850	0.0266	2.7	91	4.0	137	5.3	182	6.6	228	8.0	273	9.3	319	10.6	364	12.0	410	13.3	455
1.500"	1350	0.0382	3.8	131	5.7	197	7.6	262	9.6	328	11.5	394	13.4	459	15.3	525	17.2	590	19.1	656
1.750"	1050	0.0521	5.2	179	7.8	268	10.4	357	13.0	446	15.6	536	18.2	625	20.8	714	23.4	803	26.0	893
2.000"	825	0.0680	6.8	233	10.2	350	13.6	467	17.0	583	20.4	700	23.8	816	27.2	933	30.6	1050	34.0	1166
Max. Brake Horsepower Required			5		6		8		10		12		13		15		17		19	

Technical Notes:
1. Volumes indicated are based on 100% Volumetric Efficiency.
2. Horsepower required based on 85% Mechanical Efficiency.
3. Ratings are nominal speeds and pressures. They may vary with Kerr Pumps' written approval.

Toll Free: USA & Canada
1-800-441-8149
E-mail: kerrpump@brightok.net

Kerr Pumps USA Corporate Offices
P.O. Box 735
2214 West 14th Street
Sulphur, Oklahoma 73086

Phone: 580/622-4207
Fax: 580/622-4206
Website: www.kerrpumps.com